TIP PROJECT: 17BP.11.H.1

CONTRACT NO: DO00144

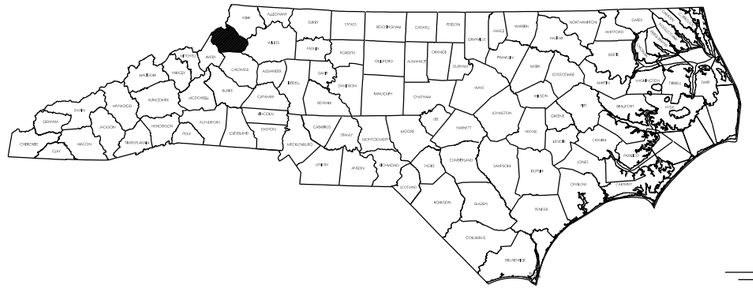

STATE OF NORTH CAROLINA
DIVISION OF HIGHWAYS

WATAUGA COUNTY

STATE	STATE PROJECT REFERENCE NO.	SHEET NO.	TOTAL SHEETS
N.C.	17BP.11.H.1		

STATE PROJECT NO.	F.A. PROJ. NO.	DESCRIPTION
17BP.11.H.1	N/A	PE
17BP.11.H.1	N/A	CONSTR

LOCATION: US221 / US321 OVER FLANNERY FORK CREEK
TYPE OF WORK: PARTIAL BRIDGE REPLACEMENT OF BRIDGE #67

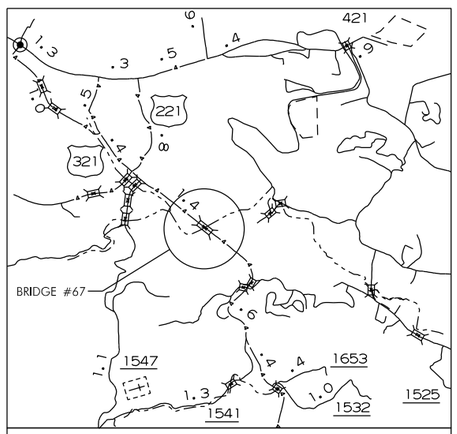

VICINITY MAP

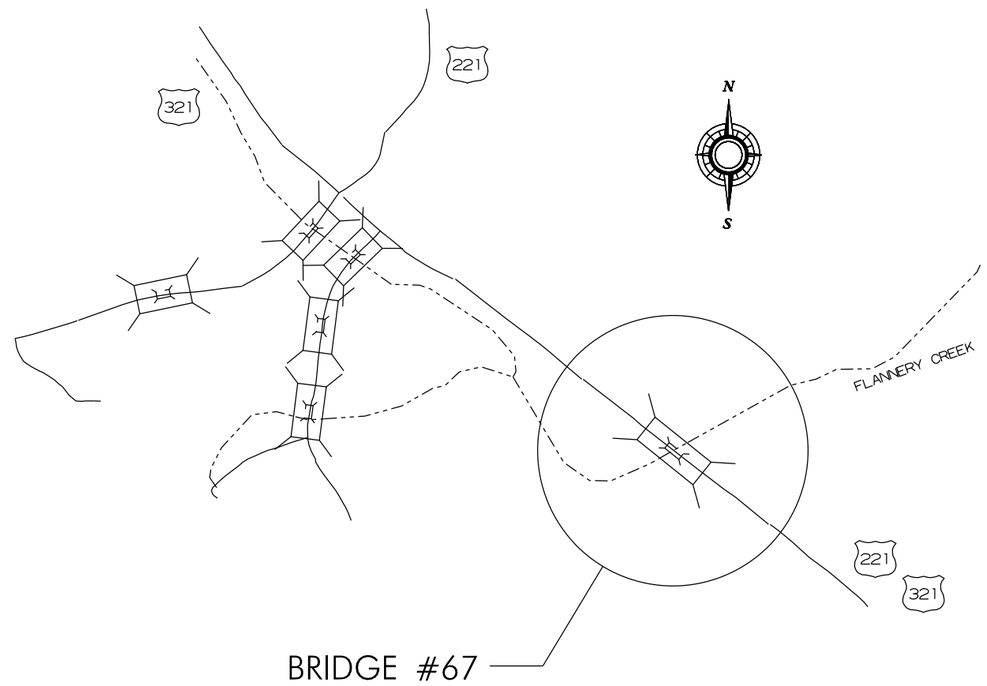

STATE OF NORTH CAROLINA DEPARTMENT OF TRANSPORTATION

Prepared In the Office of:
STRUCTURES MANAGEMENT UNIT
NORTH CAROLINA DEPARTMENT OF TRANSPORTATION

2012 STANDARD SPECIFICATIONS

LETTING DATE:
DECEMBER 29, 2011

GREG PERFETTI, PE
STATE STRUCTURES MANAGEMENT ENGINEER

NORTH CAROLINA PROFESSIONAL SEAL 035635 ENGINEER DAVID N. SNOKE
11/18/11

DAVID N. SNOKE, PE
DESIGN ENGINEER

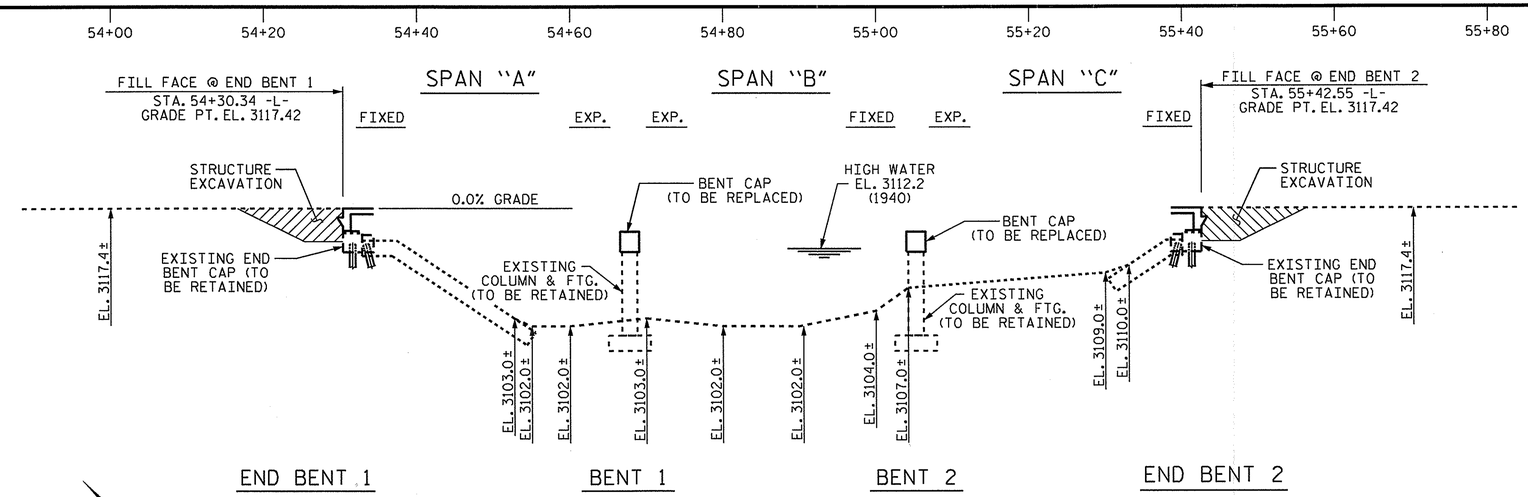

SECTION ALONG ℄ -L-

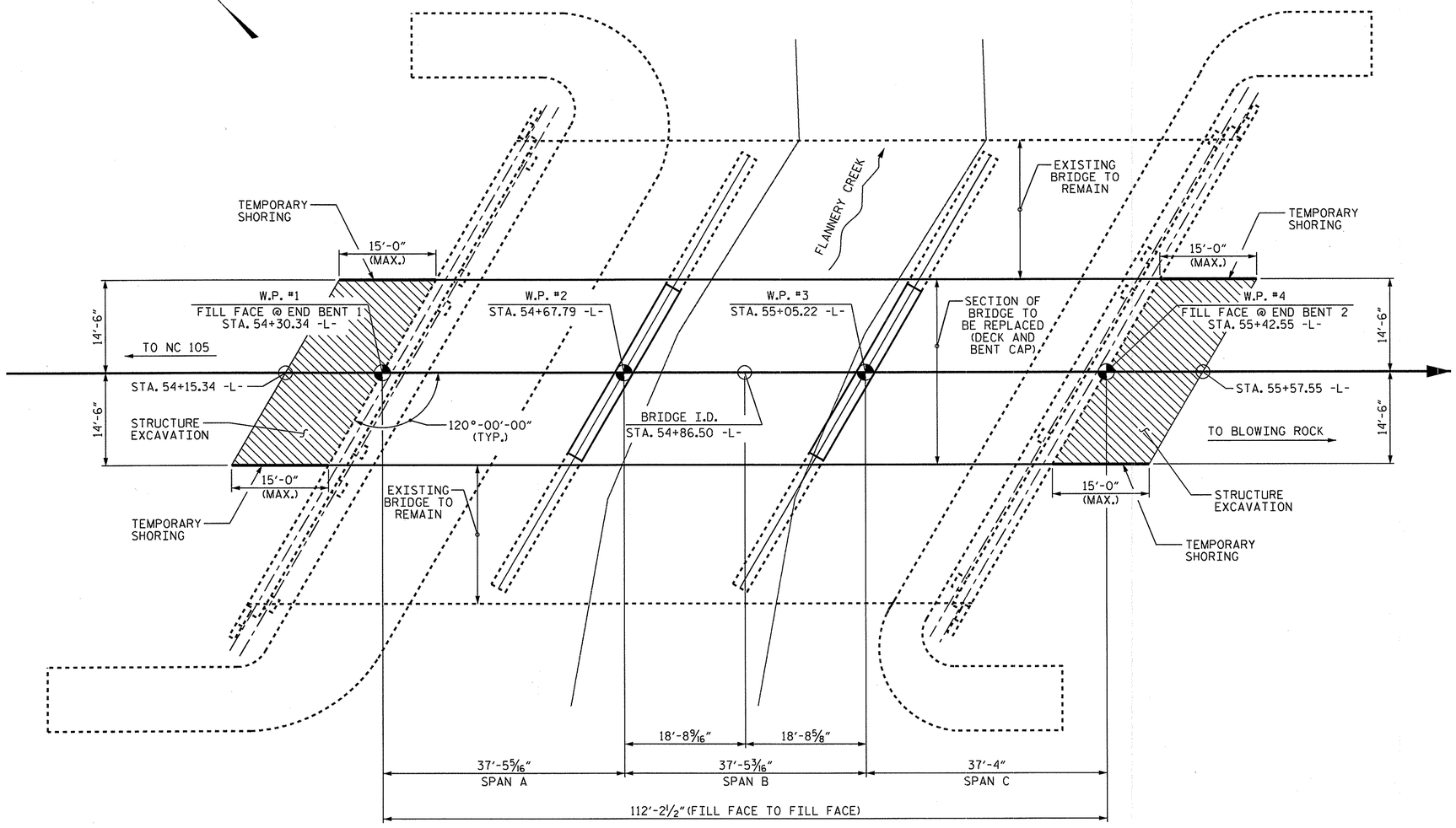

PLAN

NOTES

EXCAVATION FOR DEMOLITION OF THE EXISTING SECTION OF BRIDGE AND CONSTRUCTION OF THE NEW SECTION OF BRIDGE SHALL BE AS DIRECTED BY THE ENGINEER. THE STRUCTURE EXCAVATION LIMITS ARE SHOWN IN THE HATCHED AREA. PAYMENT FOR THIS WORK SHALL BE PAID FOR AT THE CONTRACT UNIT PRICE FOR STRUCTURE EXCAVATION. EXCAVATION AREA SHALL BE BACKFILLED WITH 78M STONE AND ROADWAY REPLACED AS DIRECTED BY THE ENGINEER.

BRIDGE NO. 67

WATAUGA COUNTY

STATION: 54+86.50 -L-

SHEET 1 OF 2

STATE OF NORTH CAROLINA
DEPARTMENT OF TRANSPORTATION
RALEIGH

GENERAL DRAWING
FOR BRIDGE OVER FLANNERY CREEK ON US 221 & US 321 BETWEEN NC 105 AND BLOWING ROCK

NORTH CAROLINA PROFESSIONAL SEAL 035635 ENGINEER DAVID N. SNOKE
10/17/2011

REVISIONS						SHEET NO.
NO.	BY:	DATE:	NO.	BY:	DATE:	S-1
1			3			TOTAL SHEETS
2			4			16

DRAWN BY : M.A. ALLEN DATE : 9-11
CHECKED BY : D.N. SNOKE DATE : 9-11

21-DEC-2011 09:26
S:\DEV\Squad_D\DNS\Watauga67\MicroStation\Watauga_67_SD_GD.dgn
maallen

NOTES

ASSUMED LIVE LOAD = HL 93 OR ALTERNATE LOADING.

FOR OTHER DESIGN DATA AND GENERAL NOTES, SEE SHEET SN.

FOR EROSION CONTROL MEASURES SEE EROSION CONTROL PLANS.

THIS BRIDGE HAS BEEN DESIGNED IN ACCORDANCE WITH THE AASHTO LRFD BRIDGE DESIGN SPECIFICATIONS.

REMOVABLE FORMS MAY BE USED IN LIEU OF METAL STAY-IN-PLACE FORMS IN ACCORDANCE WITH ARTICLE 420-3 OF THE STANDARD SPECIFICATIONS.

THE EXISTING STRUCTURE IS 112 FEET LONG AND CONSISTS OF THREE SPANS OF 37 FEET EACH AND A CLEAR ROADWAY WIDTH OF 64 FEET. THE PORTION BEING REPLACED HAS REINFORCED CONCRETE GIRDERS WITH A REINFORCED CONCRETE DECK. END BENTS ARE CONCRETE CAPS ON STEEL H-PILES, BENTS ARE CONCRETE CAPS ON CONCRETE COLUMNS AND FOOTINGS. REINFORCED CONCRETE SLAB, CURTAIN WALL AND BENT CAPS LOCATED AT THE CENTER OF THE EXISTING STRUCTURE SHALL BE REMOVED. THE EXISTING BRIDGE IS PRESENTLY NOT POSTED FOR LOAD LIMIT. SHOULD THE STRUCTURAL INTEGRITY OF THE BRIDGE DETERIORATE A LOAD LIMIT MAY BE POSTED AND MAY BE REDUCED AS FOUND NECESSARY DURING THE LIFE OF THE PROJECT. SEE SPECIAL PROVISION FOR REMOVAL OF EXISTING STRUCTURE @ 54+86.50 -L-.

REMOVAL OF THE EXISTING BRIDGE SHALL BE PERFORMED SO AS NOT TO ALLOW DEBRIS TO FALL INTO THE WATER. THE CONTRACTOR SHALL REMOVE THE BRIDGE AND SUBMIT PLANS FOR DEMOLITION IN ACCORDANCE WITH ARTICLE 402-2 OF THE STANDARD SPECIFICATIONS.

THE SUBSTRUCTURE OF THE EXISTING BRIDGE INDICATED ON THE PLANS IS FROM THE BEST INFORMATION AVAILABLE. SINCE THIS INFORMATION IS SHOWN FOR THE CONVENIENCE OF THE CONTRACTOR, THE CONTRACTOR SHALL HAVE NO CLAIM WHATSOEVER AGAINST THE DEPARTMENT OF TRANSPORTATION FOR ANY DELAYS OR ADDITIONAL COST INCURRED BASED ON DIFFERENCES BETWEEN THE EXISTING BRIDGE SUBSTRUCTURE SHOWN ON THE PLANS AND THE ACTUAL CONDITIONS AT THE PROJECT SITE.

THE CLASS AA CONCRETE IN THE BRIDGE DECK SHALL CONTAIN FLY ASH OR GROUND GRANULATED BLAST FURNACE SLAG AT THE SUBSTITUTION RATE SPECIFIED IN ARTICLE 1024-1 AND IN ACCORDANCE WITH ARTICLES 1024-5 AND 1024-6 OF THE STANDARD SPECIFICATIONS. NO PAYMENT WILL BE MADE FOR THIS SUBSTITUTION AS IT IS CONSIDERED INCIDENTAL TO THE COST OF THE REINFORCED CONCRETE DECK SLAB.

FOR BRIDGE DECK GRINDING, SEE SPECIAL PROVISIONS.

FOR GROUT FOR STRUCTURES, SEE SPECIAL PROVISIONS.

FOR SUBMITTAL OF WORKING DRAWINGS, SEE SPECIAL PROVISIONS.

FOR FALSEWORK AND FORMWORK, SEE SPECIAL PROVISIONS.

FOR CRANE SAFETY, SEE SPECIAL PROVISIONS.

FOR TEMPORARY SHORING, SEE SPECIAL PROVISIONS.

TOTAL BILL OF MATERIAL

	TEMPORARY SHORING	REMOVAL OF EXISTING STRUCTURE	UNCLASSIFIED STRUCTURE EXCAVATION	REINFORCED CONCRETE DECK SLAB	CLASS A CONCRETE	REINFORCING STEEL	STRUCTURAL STEEL	ELASTOMERIC BEARINGS	FOAM JOINT SEALS	BRIDGE DECK GRINDING
	SQ. FT.	LUMP SUM	LUMP SUM	SQ. FT.	CU. YDS.	LBS.	LBS.	LUMP SUM	LUMP SUM	SQ. FT.
SUPERSTRUCTURE				3030			39,100	LUMP SUM	LUMP SUM	2970
END BENT 1	76									
BENT 1					7.2	1382				
BENT 2					7.2	1382				
END BENT 2	76									
TOTAL	152	LUMP SUM	LUMP SUM	3030	14.4	2,764	39,100	LUMP SUM	LUMP SUM	2970

BRIDGE NO. 67

WATAUGA COUNTY

STATION: 54+86.50 -L-

SHEET 2 OF 2

STATE OF NORTH CAROLINA
DEPARTMENT OF TRANSPORTATION
RALEIGH

GENERAL DRAWING

FOR BRIDGE OVER FLANNERY CREEK ON US 221 & US 321 BETWEEN NC 105 AND BLOWING ROCK

NORTH CAROLINA PROFESSIONAL SEAL 035635 ENGINEER DAVID N. SNOKE

10/17/2011

REVISIONS						SHEET NO.
NO.	BY:	DATE:	NO.	BY:	DATE:	S-2
1			3			TOTAL SHEETS
2			4			16

DRAWN BY : M.A. ALLEN DATE : 9-11
CHECKED BY : D.N. SNOKE DATE : 9-11

21-DEC-2011 11:53
S:\DEV\Squad_D\DNS\Watauga67\MicroStation\Watauga_67_SD_GD.dgn
moallen

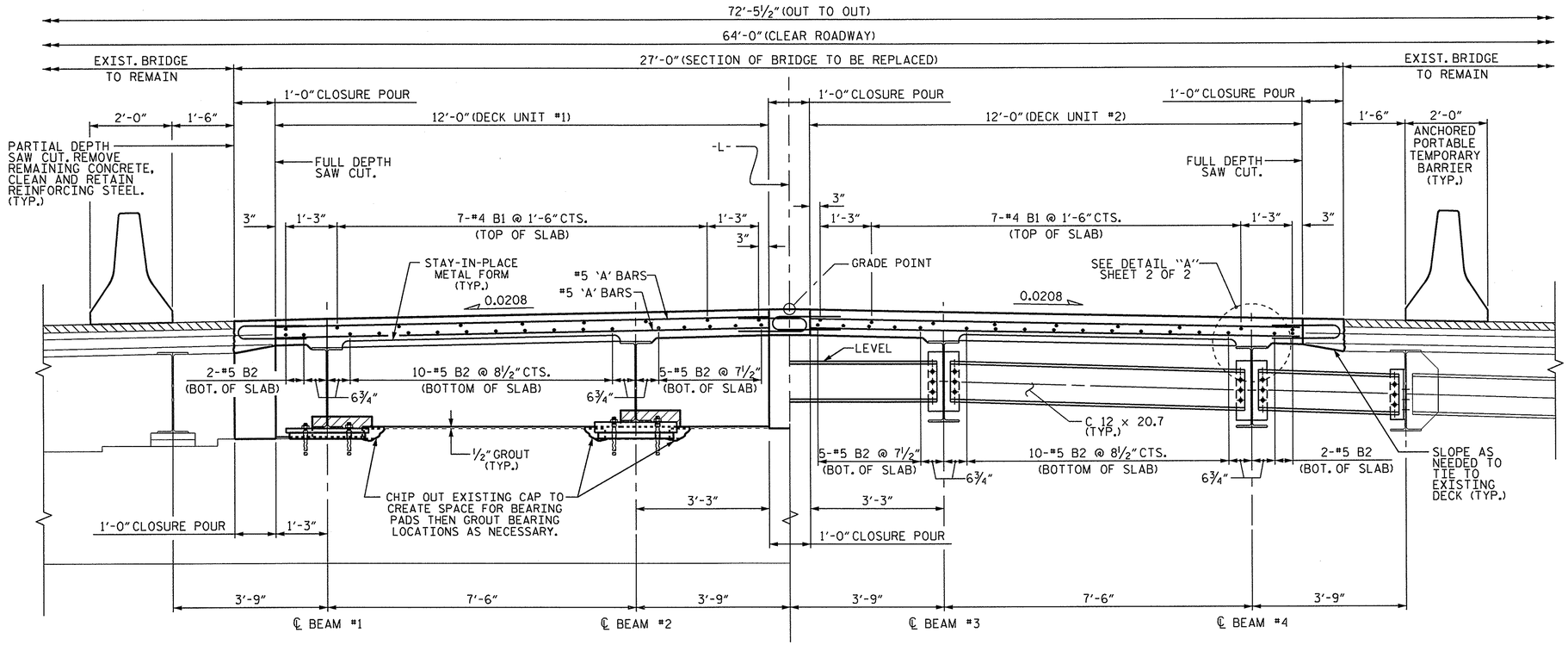

PART. SECTION
SHOWING CURTAIN WALL @ END BENTS

PART. SECTION
SHOWING INTERMEDIATE DIAPHRAGMS

TYPICAL SECTION

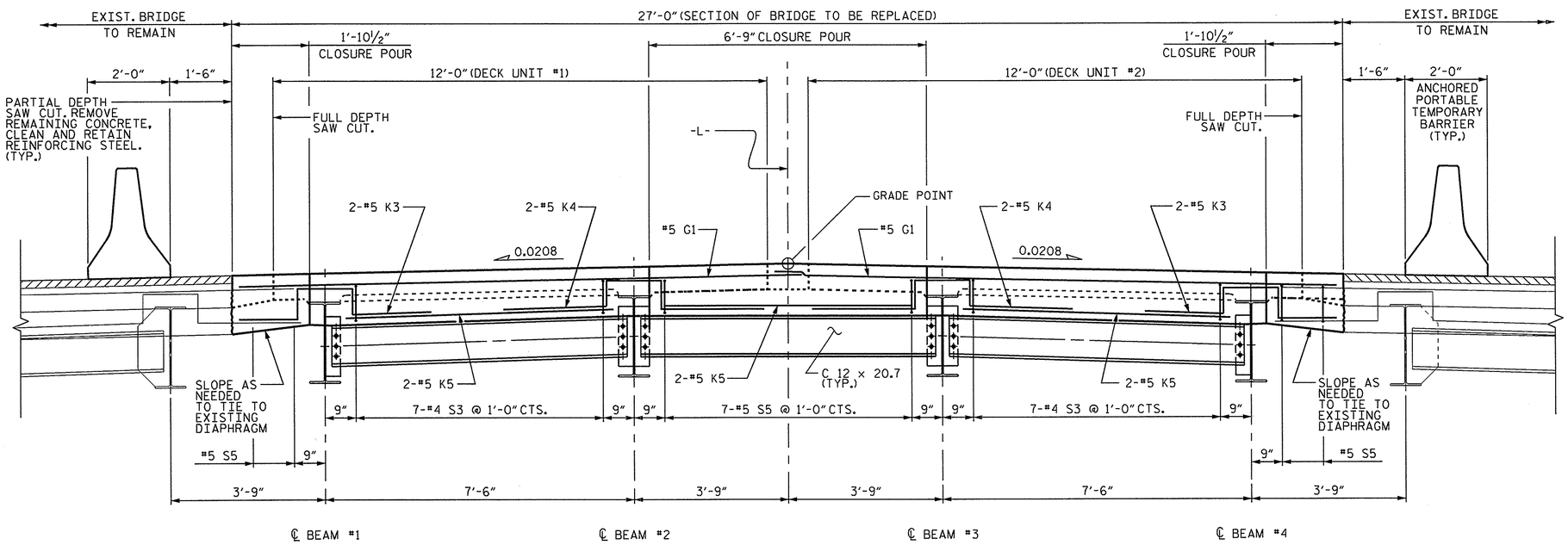

TYPICAL SECTION
(AT BENT DIAPHRAGM)

NOTES

A FULL DEPTH SAW CUT AND A PARTIAL DEPTH SAW CUT SHALL BE MADE AND EXISTING CONCRETE REMOVED IN ACCORDANCE WITH PLAN DETAILS.

THE CONTRACTOR MAY, WHEN NECESSARY, PROPOSE A SCHEME FOR AVOIDING INTERFERENCE BETWEEN METAL STAY-IN-PLACE FORM SUPPORTS OR FORMS AND END STIFFENERS OR CONNECTOR PLATES. THE PROPOSAL SHALL BE INDICATED, AS APPROPRIATE, ON EITHER THE STEEL WORKING DRAWINGS OR THE METAL STAY-IN-PLACE FORM WORKING DRAWINGS.

BRIDGE SEAT ELEVATIONS ARE TO BE VERIFIED BY THE ENGINEER BEFORE PLACEMENT OF DECK UNITS.

DECK UNITS SHALL BE CONSTRUCTED IN ACCORDANCE WITH ALL APPLICABLE SECTIONS OF THE STANDARD SPECIFICATIONS.

PROVIDE 1¼" HIGH BEAM BOLSTERS UPPER AT 4'-0" CTS. ATOP THE METAL STAY-IN-PLACE FORMS TO SUPPORT THE BOTTOM MAT OF 'A' BARS. WHEN USING REMOVABLE FORMS, PROVIDE CONTINUOUS HIGH CHAIRS FOR METAL DECK (C.H.C.M.) @ 4'-0" CTS. WITH A HEIGHT TO SUPPORT THE BOTTOM MAT OF 'A' BARS A CLEAR DISTANCE OF 2½" ABOVE THE TOP OF THE REMOVABLE FORM.

DECK UNIT CONSTRUCTION SEQUENCE

1. AT THE OFF-SITE ASSEMBLY LOCATION, SUPPORT GIRDERS AT BEARING LOCATIONS. ALLOW EACH GIRDER TO DEFLECT UNDER SELFWEIGHT, THEN INSTALL AND FULLY TIGHTEN INTERMEDIATE DIAPHRAGMS.
2. VERIFY THAT THE OFF-SITE BEARING SUPPORT SETUP AND FALSEWORK FOR EACH DECK UNIT IS CORRECT FOR THE REQUIRED SUPERELEVATION AND SKEW.
3. THE CONCRETE IN EACH DECK UNIT SHALL REACH FULL COMPRESSIVE STRENGTH BEFORE TRANSPORTING THE UNITS.
4. VERIFY BRIDGE SEAT ELEVATIONS.
5. POSITION BEARINGS AND SOLE PLATES ON CAP.
6. PLACE AND PROPERLY ALIGN ALL DECK UNITS THEN INSTALL AND FULLY TIGHTEN DIAPHRAGMS IN CLOSURE POUR BAYS.
7. FIELD WELD GIRDERS TO SOLE PLATES.
8. AFTER ALL CLOSURE POURS AND ELASTOMERIC CONCRETE AT JOINTS HAVE REACHED COMPRESSIVE STRENGTH, LONGITUDINALLY GRIND THE NEW DECK.

BRIDGE NO. 67
WATAUGA COUNTY
STATION: 54+86.50 -L-
SHEET 1 OF 2

STATE OF NORTH CAROLINA
DEPARTMENT OF TRANSPORTATION
RALEIGH

SUPERSTRUCTURE
TYPICAL SECTION

NORTH CAROLINA PROFESSIONAL SEAL 035635 ENGINEER DAVID N. SNOKE
10/17/2011

REVISIONS						SHEET NO.
NO.	BY:	DATE:	NO.	BY:	DATE:	S-3
1			3			TOTAL SHEETS
2			4			16

DRAWN BY : M.A. ALLEN DATE : 9-11
CHECKED BY : D.N. SNOKE DATE : 9-11

17-OCT-2011 09:58
S:\PG2\Squad_D\DNS\Watauga67\MicroStation\Watauga_67_SD_TS.dgn
maallen

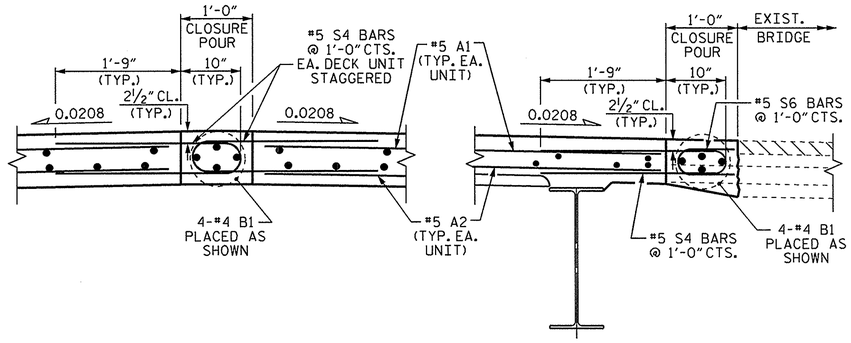

BETWEEN PRECAST UNITS

AT EXISTING DECK

CLOSURE POUR DETAILS

(AT THE DECK)

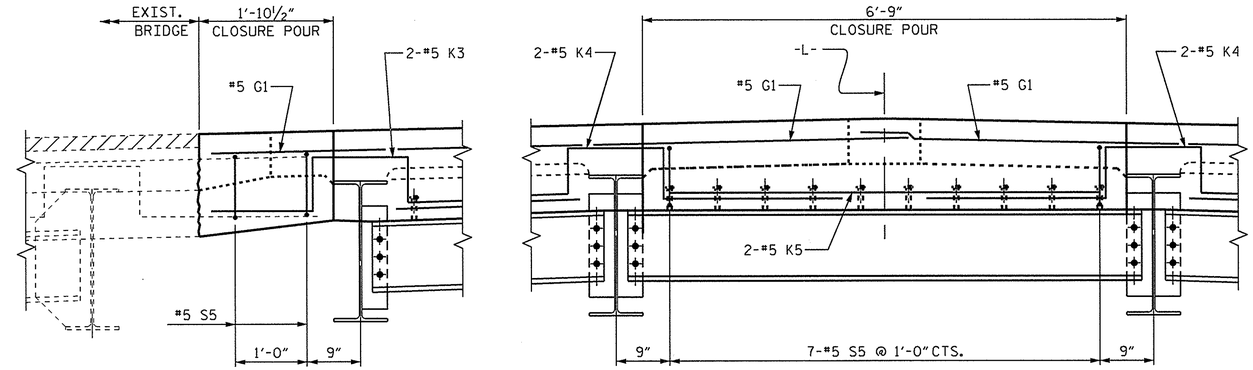

AT EXISTING DECK

BETWEEN PRECAST UNITS

BENT DIAPHRAGM CLOSURE POUR DETAILS

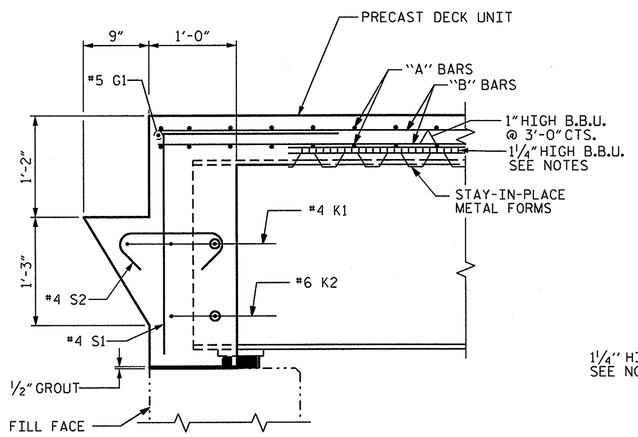

SECTION AT END BENT

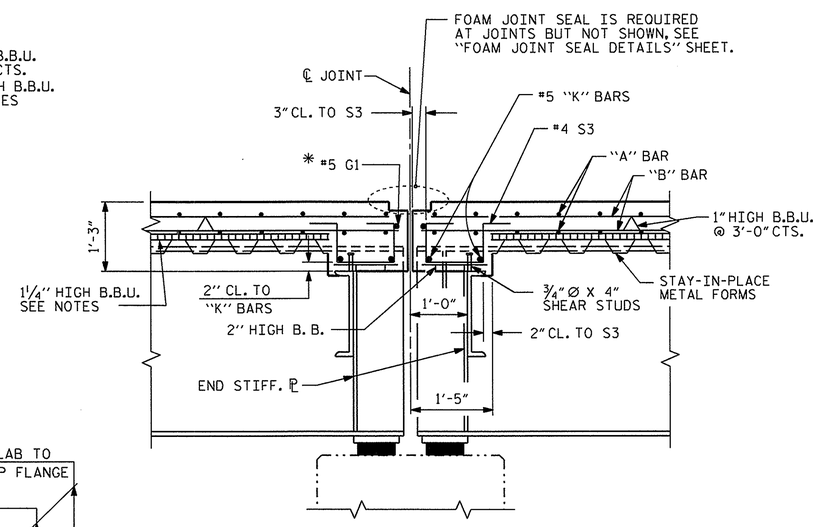

SECTION AT BENT

* #5 G1 BAR MAY BE SHIFTED SLIGHTLY, AS NECESSARY, TO CLEAR DIAPHRAGM AND REINFORCING STEEL.

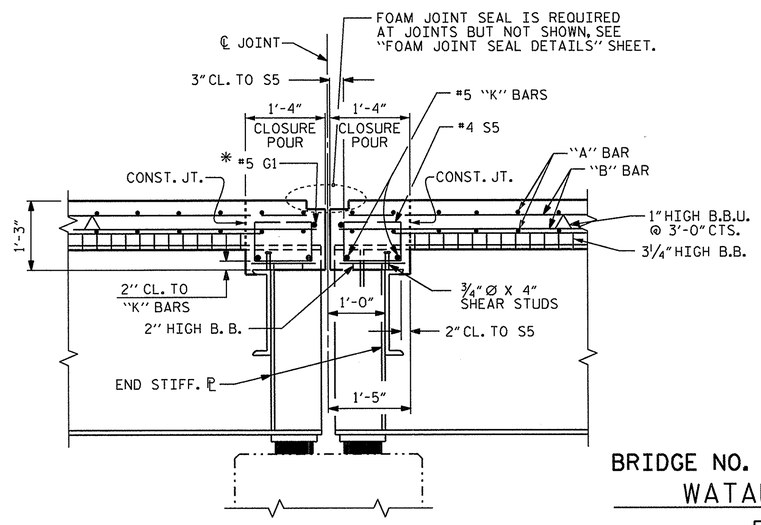

SECTION AT BENT CLOSURE POUR

* #5 G1 BAR MAY BE SHIFTED SLIGHTLY, AS NECESSARY, TO CLEAR DIAPHRAGM AND REINFORCING STEEL.

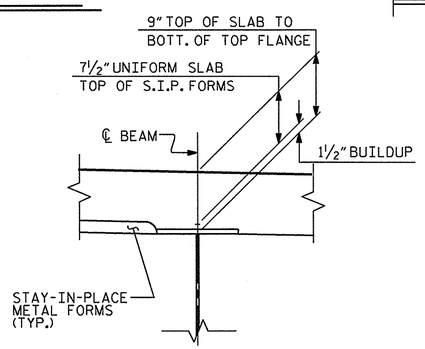

DETAIL A

BRIDGE NO. 67

WATAUGA COUNTY

STATION: 54+86.50 -L-

SHEET 2 OF 2

STATE OF NORTH CAROLINA
DEPARTMENT OF TRANSPORTATION
RALEIGH

SUPERSTRUCTURE

TYPICAL SECTION DETAILS

NORTH CAROLINA PROFESSIONAL SEAL 035635 ENGINEER DAVID N. SNOKE
10/17/2011

REVISIONS						SHEET NO.
NO.	BY:	DATE:	NO.	BY:	DATE:	S-4
1			3			TOTAL SHEETS
2			4			16

DRAWN BY : M.A. ALLEN DATE : 9-11
CHECKED BY : D.N. SNOKE DATE : 9-11

17-OCT-2011 09:58
S:\PG2\Squad_D\DNS\Watauga67\MicroStation\Watauga_67_SD_TS.dgn
maallen

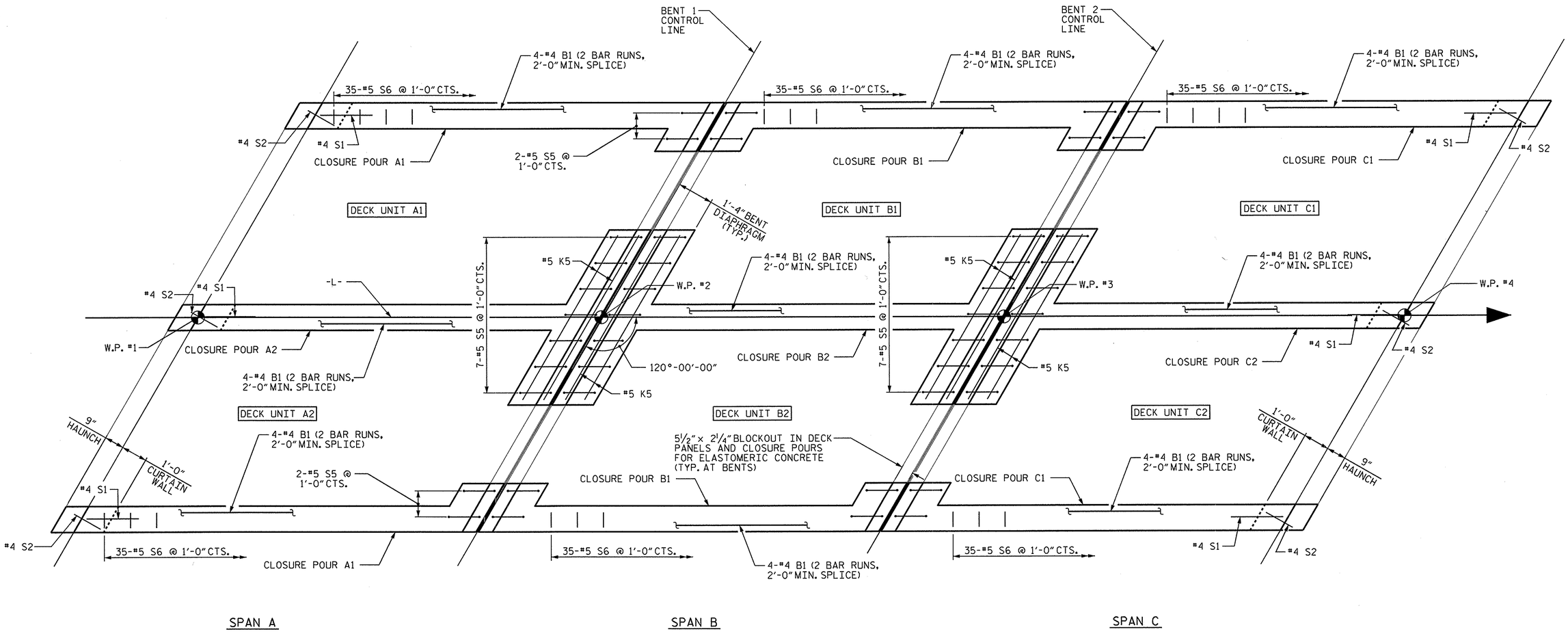

PLAN OF SPANS - CLOSURE POURS

BRIDGE NO. 67

WATAUGA COUNTY

STATION: 54+86.50 -L-

SHEET 1 OF 4

STATE OF NORTH CAROLINA
DEPARTMENT OF TRANSPORTATION
RALEIGH

SUPERSTRUCTURE

PLAN OF SPANS
CLOSURE POURS

NORTH CAROLINA PROFESSIONAL SEAL 035635 ENGINEER DAVID N. SNOKE
10/7/2011

REVISIONS						SHEET NO.
NO.	BY:	DATE:	NO.	BY:	DATE:	S-5
1			3			TOTAL SHEETS
2			4			16

DRAWN BY : M.A. ALLEN DATE : 9-11
CHECKED BY : D.N. SNOKE DATE : 9-11

17-OCT-2011 10:15
S:\PG2\Squad_D\DNS\Watauga67\MicroStation\Watauga_67_SD_So_b_c.dgn
maallen

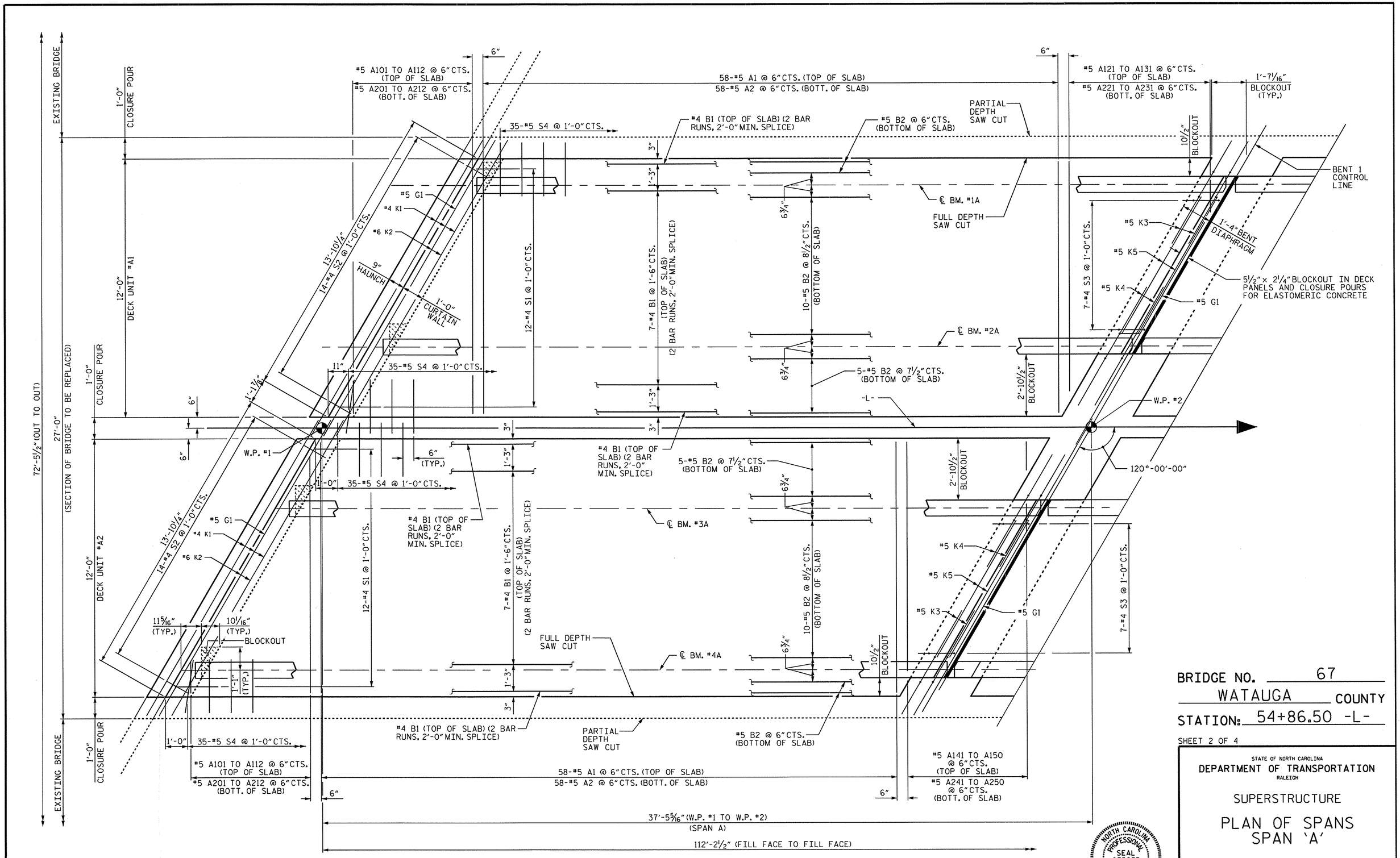

PLAN OF SPAN 'A'

BRIDGE NO. 67
WATAUGA COUNTY
STATION: 54+86.50 -L-

SHEET 2 OF 4

STATE OF NORTH CAROLINA
DEPARTMENT OF TRANSPORTATION
RALEIGH

SUPERSTRUCTURE

PLAN OF SPANS
SPAN 'A'

NORTH CAROLINA PROFESSIONAL SEAL 035635 ENGINEER DAVID N. SNOKE
10/17/2011

REVISIONS						SHEET NO.
NO.	BY:	DATE:	NO.	BY:	DATE:	S-6
1			3			TOTAL SHEETS
2			4			16

DRAWN BY : M.A. ALLEN DATE : 9-11
CHECKED BY : D.N. SNOKE DATE : 9-11

17-OCT-2011 10:15
S:\PG2\Squad_D\DNS\Watauga67\MicroStation\Watauga_67_SD_Sa_b_c.dgn
mallen

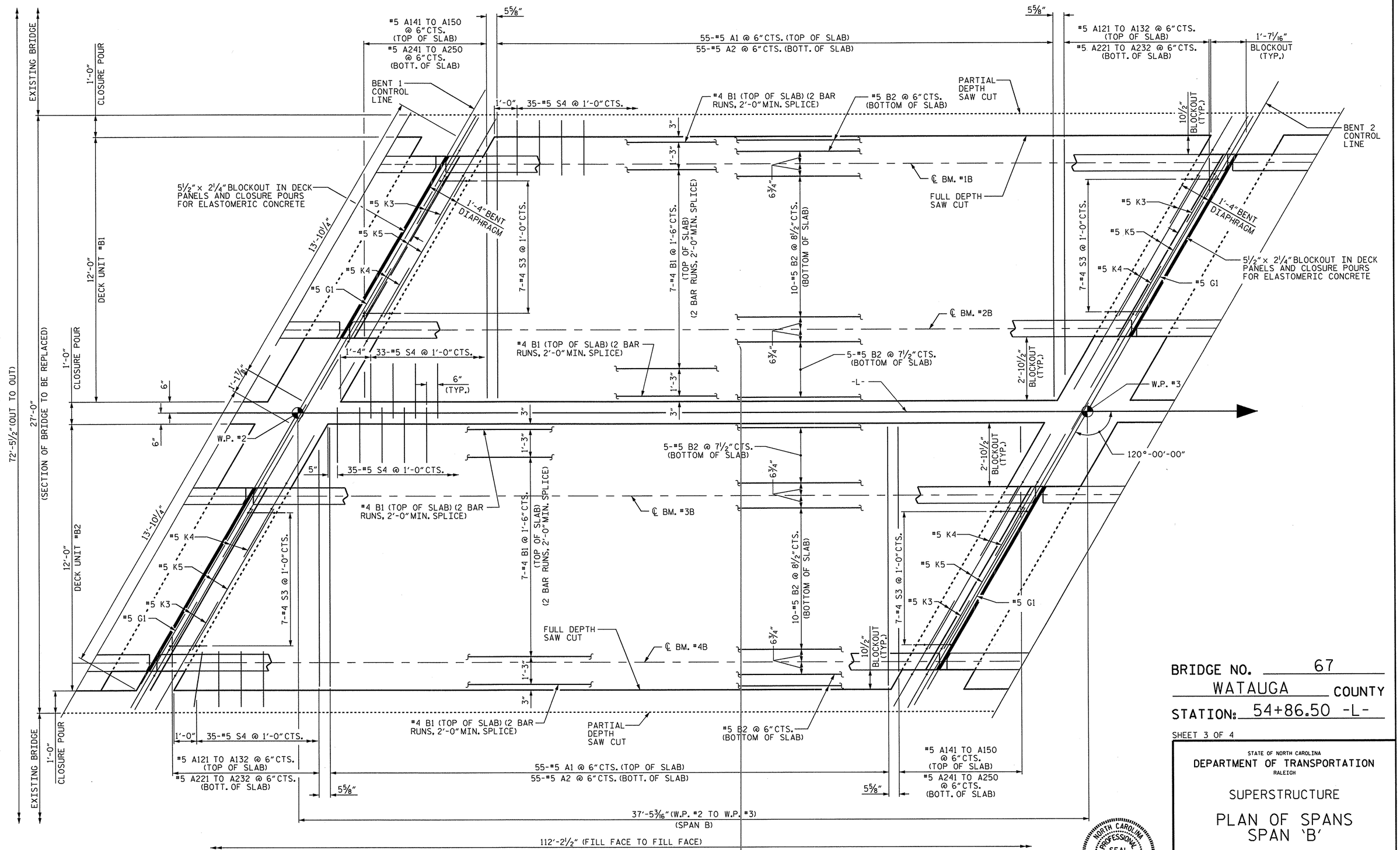

PLAN OF SPAN 'B'

BRIDGE NO. 67
WATAUGA COUNTY
STATION: 54+86.50 -L-

SHEET 3 OF 4

STATE OF NORTH CAROLINA
DEPARTMENT OF TRANSPORTATION
RALEIGH

SUPERSTRUCTURE

PLAN OF SPANS
SPAN 'B'

NORTH CAROLINA PROFESSIONAL SEAL 035635 ENGINEER DAVID N. SNOKE
10/13/2011

REVISIONS								SHEET NO.
NO.	BY:	DATE:	NO.	BY:	DATE:			S-7
1			3					TOTAL SHEETS
2			4					16

DRAWN BY : M.A. ALLEN DATE : 9-11
CHECKED BY : D.N. SNOKE DATE : 9-11

17-OCT-2011 10:14
S:\PG2\Squad_D\DNS\Watauga67\MicroStation\Watauga_67_SD_Sa_b_c.dgn
maallen

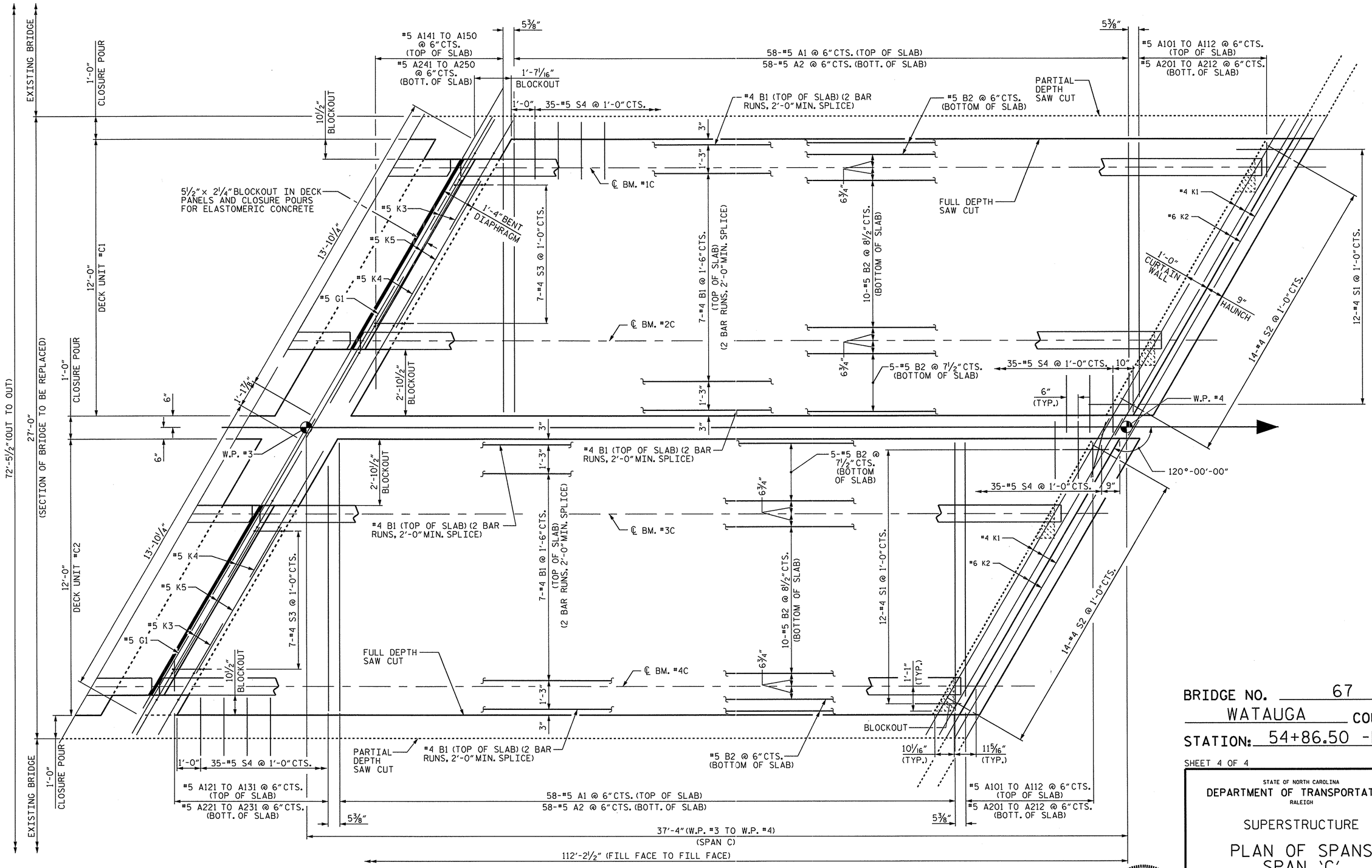

PLAN OF SPAN 'C'

BRIDGE NO. 67

WATAUGA COUNTY

STATION: 54+86.50 -L-

SHEET 4 OF 4

STATE OF NORTH CAROLINA
DEPARTMENT OF TRANSPORTATION
RALEIGH

SUPERSTRUCTURE

PLAN OF SPANS
SPAN 'C'

NORTH CAROLINA PROFESSIONAL SEAL 035635 ENGINEER DAVID N. SNOKE 10/7/2011

REVISIONS						SHEET NO.
NO.	BY:	DATE:	NO.	BY:	DATE:	S-8
1			3			TOTAL SHEETS
2			4			16

DRAWN BY : M.A. ALLEN DATE : 9-11
CHECKED BY : D.N. SNOKE DATE : 9-11

17-OCT-2011 10:14
S:\PG2\Squad_D\DNS\Watauga67\MicroStation\Watauga_67_SD_Sa_b_c.dgn
maallen

BILL OF MATERIAL FOR ONE DECK UNIT A1 OR C2

BAR	NO.	SIZE	TYPE	LENGTH	WEIGHT
* A1	58	#5	STR	11'-8"	706
* A101	1	#5	STR	1'-6"	2
* A102	1	#5	STR	2'-4"	2
* A103	1	#5	STR	3'-2"	3
* A104	1	#5	STR	4'-11"	4
* A105	1	#5	STR	4'-11"	5
* A106	1	#5	STR	5'-10"	6
* A107	1	#5	STR	6'-8"	7
* A108	1	#5	STR	7'-6"	8
* A109	1	#5	STR	8'-5"	9
* A110	1	#5	STR	9'-3"	10
* A111	1	#5	STR	10'-2"	11
* A112	1	#5	STR	11'-0"	11
* A121	1	#5	STR	1'-6"	2
* A122	1	#5	STR	2'-4"	2
* A123	1	#5	STR	4'-1"	4
* A124	1	#5	STR	4'-11"	5
* A125	1	#5	STR	5'-10"	6
* A126	1	#5	STR	6'-8"	7
* A127	1	#5	STR	7'-6"	8
* A128	1	#5	STR	8'-5"	9
* A129	1	#5	STR	9'-3"	10
* A130	1	#5	STR	10'-2"	11
* A131	4	#5	STR	10'-8"	45
A2	58	#5	STR	11'-8"	706
A201	1	#5	STR	1'-6"	2
A202	1	#5	STR	2'-4"	2
A203	1	#5	STR	3'-2"	3
A204	1	#5	STR	4'-1"	4
A205	1	#5	STR	4'-11"	5
A206	1	#5	STR	5'-10"	6
A207	1	#5	STR	6'-8"	7
A208	1	#5	STR	7'-6"	8
A209	1	#5	STR	8'-5"	9
A210	1	#5	STR	9'-3"	10
A211	1	#5	STR	10'-2"	11
A212	1	#5	STR	11'-0"	11
A221	1	#5	STR	1'-6"	2
A222	1	#5	STR	2'-4"	2
A223	1	#5	STR	4'-1"	4
A224	1	#5	STR	4'-11"	5
A225	1	#5	STR	5'-10"	6
A226	1	#5	STR	6'-8"	7
A227	1	#5	STR	7'-6"	8
A228	1	#5	STR	8'-5"	9
A229	1	#5	STR	9'-3"	10
A230	1	#5	STR	10'-2"	11
A231	4	#5	STR	10'-8"	45
* B1	18	#4	STR	19'-6"	234
B2	17	#5	STR	36'-10"	653
* G1	2	#5	STR	15'-10"	33
K1	3	#4	STR	15'-9"	32
K2	2	#6	STR	15'-9"	47
* K3	2	#5	1	7'-1"	15
* K4	2	#5	1	7'-10"	16
K5	2	#5	STR	7'-6"	16
* S1	14	#4	2	4'-6"	42
S2	12	#4	3	1'-11"	15
* S3	7	#4	4	3'-6"	16
* S4	70	#5	5	5'-3"	383
REINFORCING STEEL				1656	LBS.
* EPOXY COATED REINF. STEEL				1623	LBS.
CLASS AA CONCRETE				12.8	CU. YDS.

BILL OF MATERIAL FOR ONE DECK UNIT A2 OR C1

BAR	NO.	SIZE	TYPE	LENGTH	WEIGHT
* A1	58	#5	STR	11'-8"	706
* A101	1	#5	STR	1'-6"	2
* A102	1	#5	STR	2'-4"	2
* A103	1	#5	STR	3'-2"	3
* A104	1	#5	STR	4'-1"	4
* A105	1	#5	STR	4'-11"	5
* A106	1	#5	STR	5'-10"	6
* A107	1	#5	STR	6'-8"	7
* A108	1	#5	STR	7'-6"	8
* A109	1	#5	STR	8'-5"	9
* A110	1	#5	STR	9'-3"	10
* A111	1	#5	STR	10'-2"	11
* A112	1	#5	STR	11'-0"	11
* A141	2	#5	STR	1'-4"	3
* A142	2	#5	STR	2'-2"	5
* A143	1	#5	STR	5'-10"	6
* A144	1	#5	STR	6'-8"	7
* A145	1	#5	STR	7'-6"	8
* A146	1	#5	STR	8'-5"	9
* A147	3	#5	STR	8'-9"	27
* A148	1	#5	STR	9'-1"	9
* A149	1	#5	STR	10'-0"	10
* A150	1	#5	STR	10'-10"	11
A2	58	#5	STR	11'-8"	706
A201	1	#5	STR	1'-6"	2
A202	1	#5	STR	2'-4"	2
A203	1	#5	STR	3'-2"	3
A204	1	#5	STR	4'-1"	4
A205	1	#5	STR	4'-11"	5
A206	1	#5	STR	5'-10"	6
A207	1	#5	STR	6'-8"	7
A208	1	#5	STR	7'-6"	8
A209	1	#5	STR	8'-5"	9
A210	1	#5	STR	9'-3"	10
A211	1	#5	STR	10'-2"	11
A212	1	#5	STR	11'-0"	11
A241	2	#5	STR	1'-4"	3
A242	2	#5	STR	2'-2"	5
A243	1	#5	STR	5'-10"	6
A244	1	#5	STR	6'-8"	7
A245	1	#5	STR	7'-6"	8
A246	1	#5	STR	8'-5"	9
A247	3	#5	STR	8'-9"	27
A248	1	#5	STR	9'-1"	9
A249	1	#5	STR	10'-0"	10
A250	1	#5	STR	10'-10"	11
* B1	18	#4	STR	19'-6"	234
B2	17	#5	STR	36'-10"	653
* G1	2	#5	STR	15'-10"	33
K1	3	#4	STR	15'-9"	32
K2	2	#6	STR	15'-9"	47
* K3	2	#5	1	7'-1"	15
* K4	2	#5	1	7'-10"	16
K5	2	#5	STR	7'-6"	16
* S1	14	#4	2	4'-6"	42
S2	12	#4	3	1'-11"	15
* S3	7	#4	4	3'-6"	16
* S4	70	#5	5	5'-3"	383
REINFORCING STEEL				1642	LBS.
* EPOXY COATED REINF. STEEL				1618	LBS.
CLASS AA CONCRETE				12.8	CU. YDS.

BILL OF MATERIAL FOR ONE DECK UNIT B

BAR	NO.	SIZE	TYPE	LENGTH	WEIGHT
* A1	55	#5	STR	11'-8"	669
* A121	1	#5	STR	1'-6"	2
* A122	1	#5	STR	2'-4"	2
* A123	1	#5	STR	4'-1"	4
* A124	1	#5	STR	4'-11"	5
* A125	1	#5	STR	5'-10"	6
* A126	1	#5	STR	6'-8"	7
* A127	1	#5	STR	7'-6"	8
* A128	1	#5	STR	8'-5"	9
* A129	3	#5	STR	8'-9"	27
* A130	1	#5	STR	9'-1"	9
* A131	1	#5	STR	10'-0"	10
* A132	1	#5	STR	10'-10"	11
* A141	2	#5	STR	1'-4"	3
* A142	2	#5	STR	2'-2"	5
* A143	1	#5	STR	5'-10"	6
* A144	1	#5	STR	6'-8"	7
* A145	1	#5	STR	7'-6"	8
* A146	1	#5	STR	8'-5"	9
* A147	3	#5	STR	8'-9"	27
* A148	1	#5	STR	9'-1"	9
* A149	1	#5	STR	10'-0"	10
* A150	1	#5	STR	10'-10"	11
A2	55	#5	STR	11'-8"	669
A221	1	#5	STR	1'-6"	2
A222	1	#5	STR	2'-4"	2
A223	1	#5	STR	4'-1"	4
A224	1	#5	STR	4'-11"	5
A225	1	#5	STR	5'-10"	6
A226	1	#5	STR	6'-8"	7
A227	1	#5	STR	7'-6"	8
A228	1	#5	STR	8'-5"	9
A229	3	#5	STR	8'-9"	27
A230	1	#5	STR	9'-1"	9
A231	1	#5	STR	10'-0"	10
A232	1	#5	STR	10'-8"	11
A241	2	#5	STR	1'-4"	3
A242	2	#5	STR	2'-2"	5
A243	1	#5	STR	5'-10"	6
A244	1	#5	STR	6'-8"	7
A245	1	#5	STR	7'-6"	8
A246	1	#5	STR	8'-5"	9
A247	3	#5	STR	8'-9"	27
A248	1	#5	STR	9'-1"	9
A249	1	#5	STR	10'-0"	10
A250	1	#5	STR	10'-10"	11
* B1	18	#4	STR	19'-6"	234
B2	17	#5	STR	36'-10"	653
* G1	2	#5	STR	15'-10"	33
* K3	4	#5	1	7'-1"	30
* K4	4	#5	1	7'-10"	33
K5	4	#5	STR	7'-6"	31
* S3	14	#4	4	3'-6"	33
* S4	67	#5	5	5'-3"	367
REINFORCING STEEL				1548	LBS.
* EPOXY COATED REINF. STEEL				1594	LBS.
CLASS AA CONCRETE				11.8	CU. YDS.

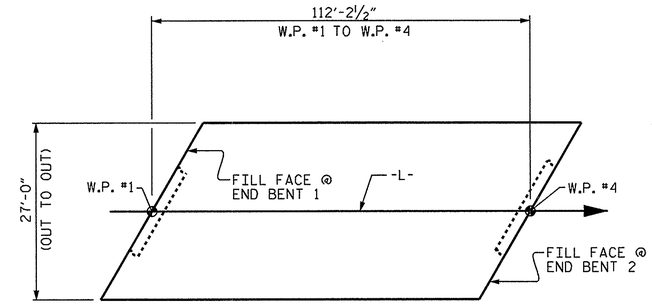

LAYOUT FOR COMPUTING AREA REINFORCED CONCRETE DECK SLAB

(SQ. FT. = 3,030)

SUPERSTRUCTURE REINF. STEEL LENGTHS ARE BASED ON THE FOLLOWING MIN. SPLICE LENGTHS		
BAR SIZE	EPOXY COATED	UNCOATED
#4	2'-0"	1'-9"
#5	2'-6"	2'-2"
#6	3'-0"	2'-7"

BRIDGE DECK GRINDING	
BRIDGE DECK	2,967 SQ.FT.

BRIDGE NO. 67
WATAUGA COUNTY
STATION: 54+86.50 -L-

SHEET 1 OF 2

STATE OF NORTH CAROLINA
DEPARTMENT OF TRANSPORTATION
RALEIGH

SUPERSTRUCTURE

BILL OF MATERIAL

NORTH CAROLINA PROFESSIONAL SEAL 035635 ENGINEER DAVID N. SNOKE
10/17/2011

REVISIONS						SHEET NO.
NO.	BY:	DATE:	NO.	BY:	DATE:	S-9
1			3			TOTAL SHEETS
2			4			16

DRAWN BY : M.A. ALLEN DATE : 9-11
CHECKED BY : D.N. SNOKE DATE : 9-11

17-OCT-2011 09:56
S:\PG2\Squad_D\DNS\Watauga67\MicroStation\Watauga_67_SD_BM.dgn
madlen

BILL OF MATERIAL FOR ONE CLOSURE POUR A1

BAR	NO.	SIZE	TYPE	LENGTH	WEIGHT
* B1	8	#4	STR	19'-6"	104
* S1	1	#4	2	4'-6"	3
S2	1	#4	3	1'-11"	1
* S5	2	#4	6	3'-6"	5
* S6	35	#5	5	1'-9"	64
REINFORCING STEEL					1 LBS.
*EPOXY COATED REINF. STEEL					176 LBS.
CLASS AA CONCRETE					1.0 CU. YDS.

BILL OF MATERIAL FOR CLOSURE POUR A2

BAR	NO.	SIZE	TYPE	LENGTH	WEIGHT
* B1	8	#4	STR	19'-6"	104
K5	2	#5	STR	7'-6"	16
* S1	1	#4	2	4'-6"	3
S2	1	#4	3	1'-11"	1
* S5	7	#4	6	3'-6"	16
REINFORCING STEEL					17 LBS.
*EPOXY COATED REINF. STEEL					123 LBS.
CLASS AA CONCRETE					1.4 CU. YDS.

BILL OF MATERIAL FOR ONE CLOSURE POUR B1

BAR	NO.	SIZE	TYPE	LENGTH	WEIGHT
* B1	8	#4	STR	19'-6"	104
* S5	4	#4	6	3'-6"	9
* S6	35	#5	5	1'-9"	64
*EPOXY COATED REINF. STEEL					177 LBS.
CLASS AA CONCRETE					0.9 CU. YDS.

BILL OF MATERIAL FOR CLOSURE POUR B2

BAR	NO.	SIZE	TYPE	LENGTH	WEIGHT
* B1	8	#4	STR	19'-6"	104
K5	4	#5	STR	7'-6"	31
* S5	14	#4	6	3'-6"	33
REINFORCING STEEL					31 LBS.
*EPOXY COATED REINF. STEEL					137 LBS.
CLASS AA CONCRETE					1.6 CU. YDS.

BILL OF MATERIAL FOR ONE CLOSURE POUR C1

BAR	NO.	SIZE	TYPE	LENGTH	WEIGHT
* B1	8	#4	STR	19'-6"	104
* S1	1	#4	2	4'-6"	3
S2	1	#4	3	1'-11"	1
* S5	2	#4	6	3'-6"	5
* S6	35	#5	5	1'-9"	64
REINFORCING STEEL					1 LBS.
*EPOXY COATED REINF. STEEL					176 LBS.
CLASS AA CONCRETE					1.0 CU. YDS.

BILL OF MATERIAL FOR CLOSURE POUR C2

BAR	NO.	SIZE	TYPE	LENGTH	WEIGHT
* B1	8	#4	STR	19'-6"	104
K5	2	#5	STR	7'-6"	16
* S1	1	#4	2	4'-6"	3
S2	1	#4	3	1'-11"	1
* S5	7	#4	6	3'-6"	16
REINFORCING STEEL					17 LBS.
*EPOXY COATED REINF. STEEL					123 LBS.
CLASS AA CONCRETE					1.4 CU. YDS.

SUPERSTRUCTURE BILL OF MATERIAL

	TOTAL NUMBER REQ'D.	TOTAL CONCRETE CLASS AA	TOTAL REINFORCING STEEL	TOTAL EPOXY COATED REINFORCING STEEL
		(CU. YDS.)	(LBS.)	(LBS.)
DECK UNIT A1	1	12.8	1656	1623
DECK UNIT A2	1	12.8	1642	1618
DECK UNIT B	2	23.6	3096	3188
DECK UNIT C1	1	12.8	1642	1618
DECK UNIT C2	1	12.8	1656	1623
CLOSURE POUR A1	2	2.0	2	352
CLOSURE POUR B1	2	1.8	-	354
CLOSURE POUR C1	2	2.0	2	352
CLOSURE POUR A2	1	1.4	17	123
CLOSURE POUR B2	1	1.6	31	137
CLOSURE POUR C2	1	1.4	17	123
TOTALS		85.0	9,761	11,111

BAR TYPES

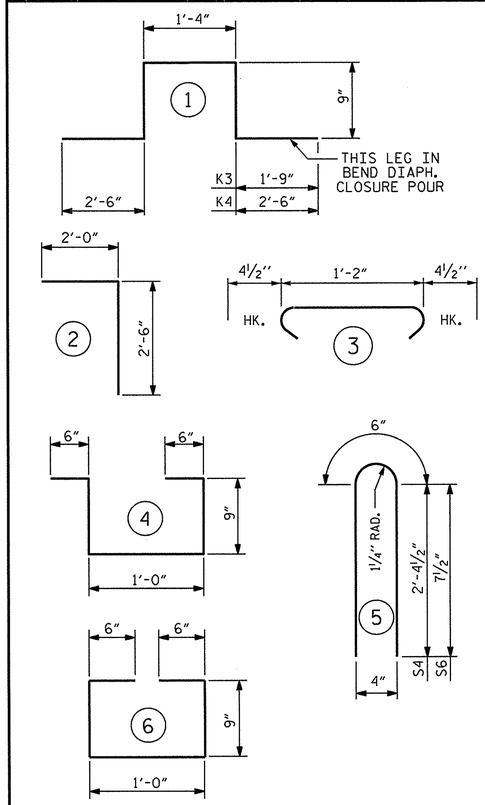

ALL BAR DIMENSIONS ARE OUT TO OUT

BRIDGE NO. 67

WATAUGA COUNTY

STATION: 54+86.50 -L-

SHEET 2 OF 2

STATE OF NORTH CAROLINA
DEPARTMENT OF TRANSPORTATION
RALEIGH

SUPERSTRUCTURE

BILL OF MATERIAL

NORTH CAROLINA PROFESSIONAL SEAL 035635 ENGINEER DAVID N. SNOKE
10/17/2011

REVISIONS						SHEET NO.
NO.	BY:	DATE:	NO.	BY:	DATE:	S-10
1			3			TOTAL SHEETS
2			4			16

DRAWN BY : M.A. ALLEN DATE : 9-11
CHECKED BY : D.N. SNOKE DATE : 9-11

17-OCT-2011 09:56
S:\PG2\Squad_D\DNS\Watauga67\MicroStation\Watauga_67_SD_BM.dgn
maallen

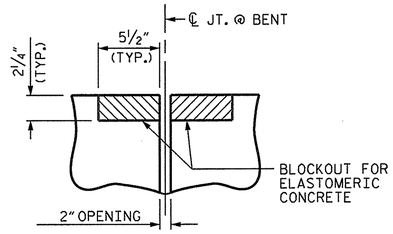

SECTION C-C
FOAM JOINT SEAL
(PRE-SAWED ELASTOMERIC
CONCRETE DIMENSIONS)

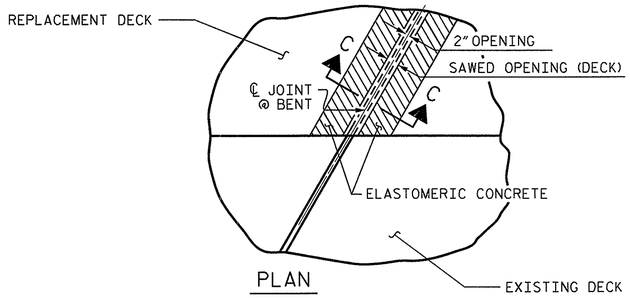

PLAN

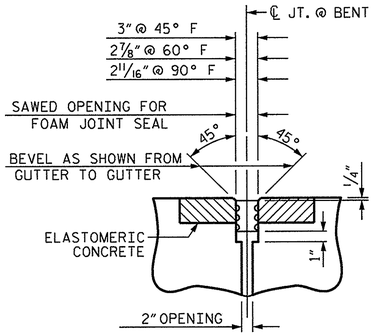

SECTION C-C
FOAM JOINT SEAL
(EXPANSION)

ELASTOMERIC CONCRETE	
BENT NO.	ELASTOMERIC CONCRETE * (CU. FT.)
1	5.4
2	5.4
TOTAL	10.8

* BASED ON THE MINIMUM BLOCKOUT SHOWN.

NOTES

FOR FOAM JOINT SEALS, SEE SPECIAL PROVISIONS.

THE NOMINAL UNCOMPRESSED SEAL WIDTH OF THE FOAM JOINT SEAL SHALL BE 3¹⁄₁₆".

FOR ELASTOMERIC CONCRETE, SEE SPECIAL PROVISIONS.

BRIDGE NO. 67
WATAUGA COUNTY
STATION: 54+86.50 -L-

STATE OF NORTH CAROLINA
DEPARTMENT OF TRANSPORTATION
RALEIGH

STANDARD

FOAM JOINT
SEAL DETAILS

NORTH CAROLINA PROFESSIONAL SEAL 035635 ENGINEER DAVID N. SNOKE
10/17/2011

REVISIONS								SHEET NO.
NO.	BY:	DATE:	NO.	BY:	DATE:			S-11
1			3					TOTAL SHEETS
2			4					16

ASSEMBLED BY : M.A. ALLEN		DATE : 9-11	
CHECKED BY : D.N. SNOKE		DATE : 9-11	
DRAWN BY : FCJ 11/88	REV. 10/17/00	RWW/LES	
CHECKED BY : ARB 11/88	REV. 5/7/03	RWW/JTE	
	REV. 5/1/06RR	MAA/KMM	

17-OCT-2011 09:56
S:\PG2\Squad_D\DNS\Watauga67\MicroStation\Watauga_67_SD_TS.dgn
moallen

STD. NO. BAS10 (SHT 5)

NOTES

STIRRUPS IN CAP MAY BE SHIFTED AS NECESSARY TO CLEAR ANCHOR BOLTS.

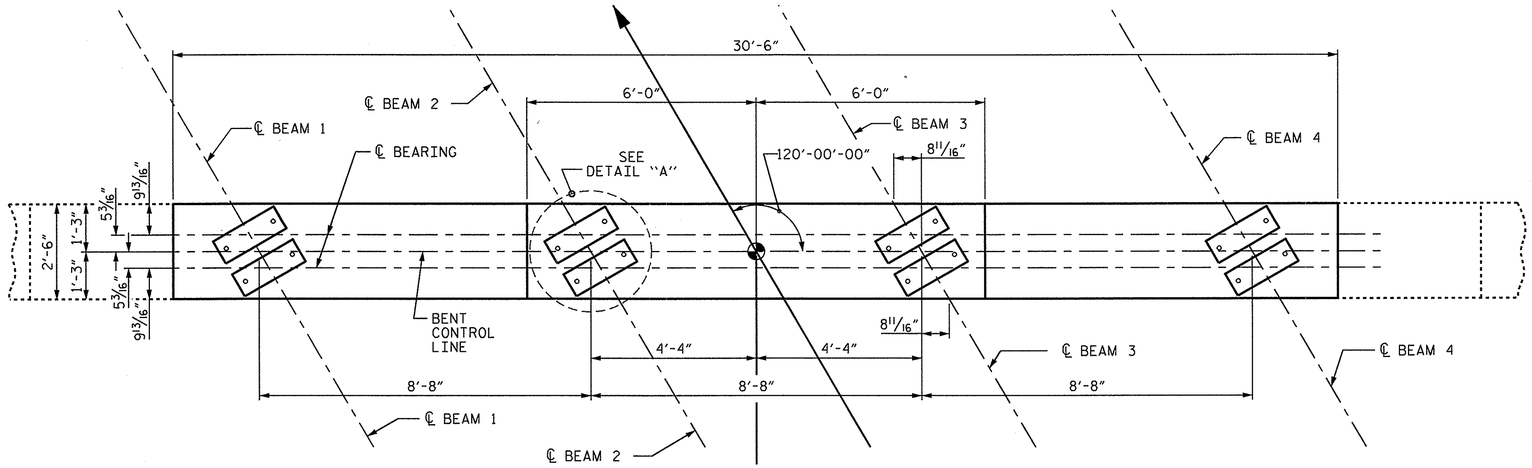

PLAN

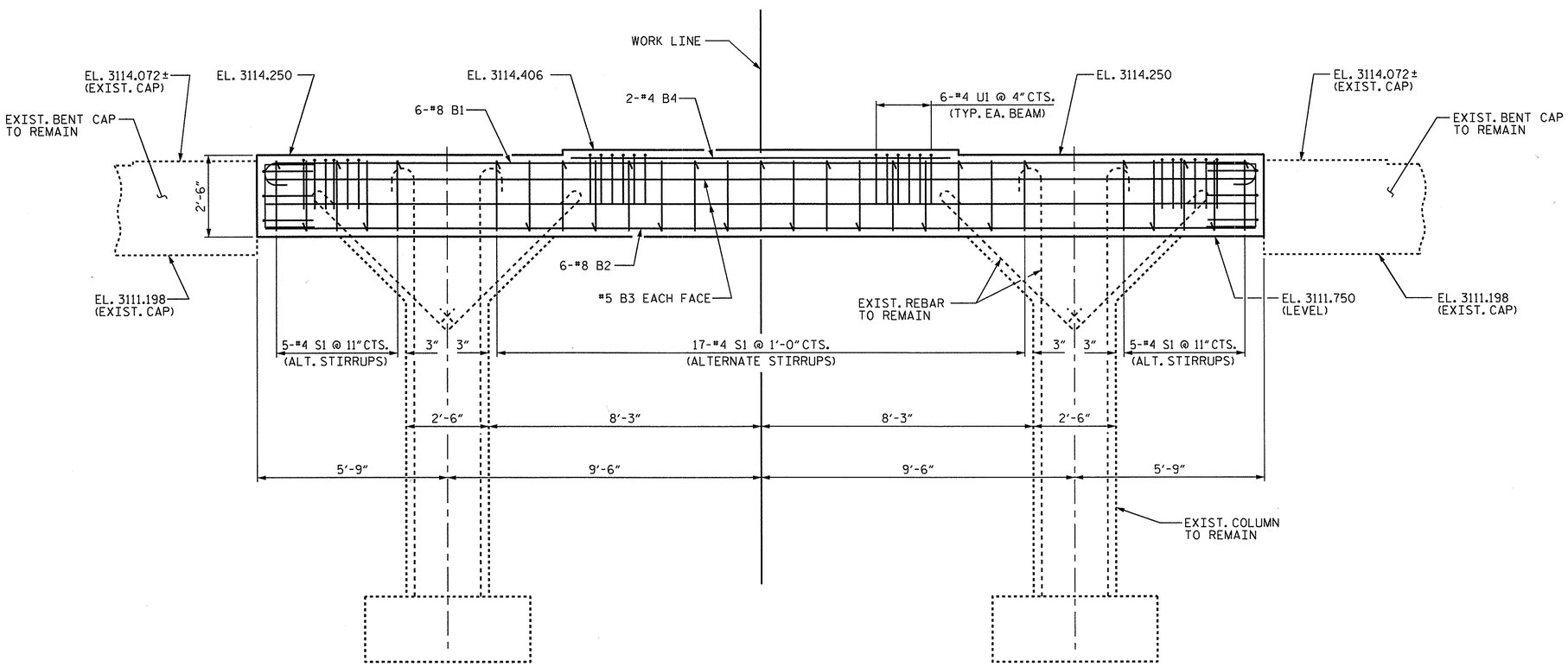

ELEVATION

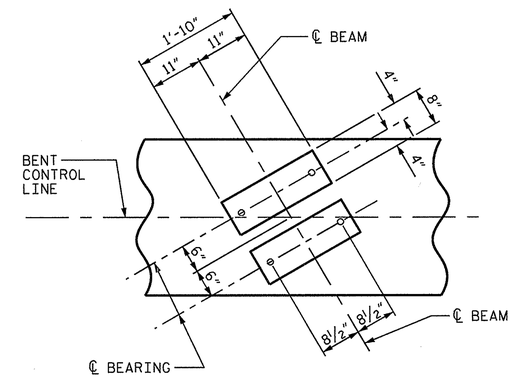

DETAIL "A"

BRIDGE NO. 67

WATAUGA COUNTY

STATION: 54+86.50 -L-

SHEET 1 OF 2

STATE OF NORTH CAROLINA
DEPARTMENT OF TRANSPORTATION
RALEIGH

SUBSTRUCTURE
BENT 1 & 2

NORTH CAROLINA PROFESSIONAL SEAL 035635 ENGINEER DAVID N. SNOKE
10/17/2011

REVISIONS						SHEET NO.
NO.	BY:	DATE:	NO.	BY:	DATE:	S-12
1			3			TOTAL SHEETS
2			4			16

DRAWN BY : M.A. ALLEN DATE : 8-11
CHECKED BY : D.N. SNOKE DATE : 10-11

17-OCT-2011 09:55
S:\PG2\Squad_D\DNS\Watauga67\MicroStation\Watauga_67_SD_B1_2.dgn
maallen

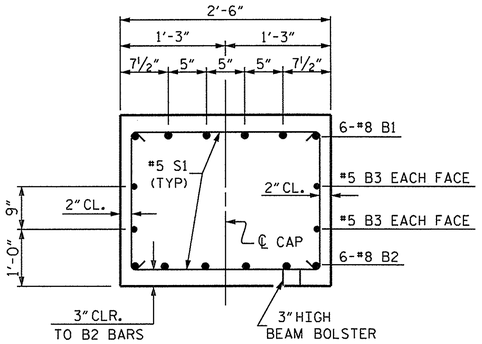

SECTION THRU CAP

(INVERT ALTERNATE #5 S1 STIRRUPS)

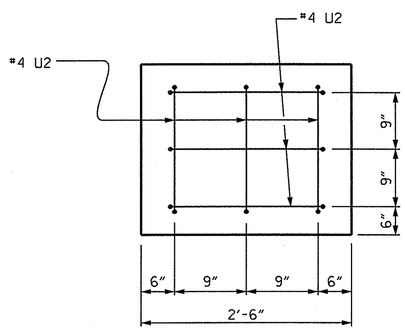

END OF CAP VIEW

(TYP. EA. END)

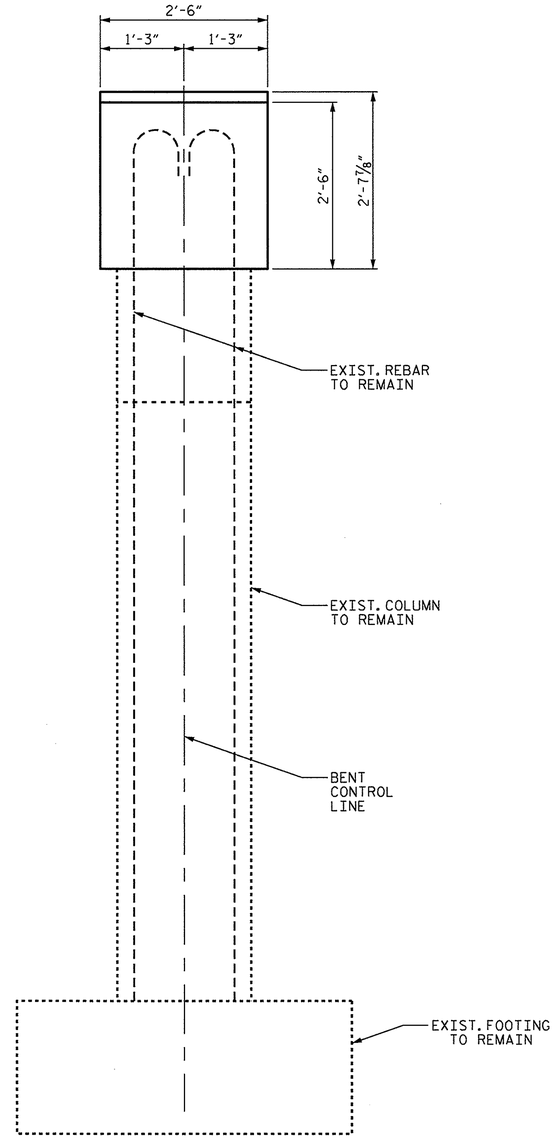

END ELEVATION

BAR TYPES

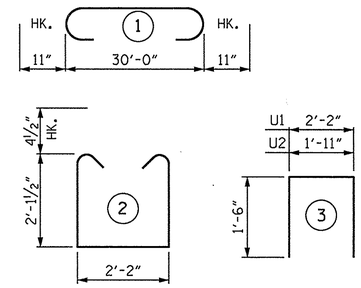

ALL BAR DIMENSIONS ARE OUT TO OUT

BILL OF MATERIAL FOR ONE BENT

BAR	NO.	SIZE	TYPE	LENGTH	WEIGHT
B1	6	#8	1	31'-10"	510
B2	6	#8	STR	30'-0"	481
B3	4	#5	STR	30'-0"	125
B4	2	#4	STR	11'-6"	15
S1	27	#4	2	7'-2"	129
U1	24	#4	3	5'-2"	83
U2	12	#4	3	4'-11"	39
REINFORCING STEEL				=	1382 LBS
CLASS 'A' CONCRETE TOTAL					7.2 C.Y.

BRIDGE NO. 67

WATAUGA COUNTY

STATION: 54+86.50 -L-

SHEET 2 OF 2

STATE OF NORTH CAROLINA
DEPARTMENT OF TRANSPORTATION
RALEIGH

SUBSTRUCTURE
BENT 1 & 2

NORTH CAROLINA PROFESSIONAL SEAL 035635 ENGINEER DAVID N. SNOKE

10/7/2011

REVISIONS						SHEET NO.
NO.	BY:	DATE:	NO.	BY:	DATE:	S-13
1			3			TOTAL SHEETS
2			4			16

DRAWN BY : M.A. ALLEN DATE : 8-11
CHECKED BY : D.N. SNOKE DATE : 10-11

17-OCT-2011 09:55
S:\PG2\Squad_D\DNS\Watauga67\MicroStation\Watauga_67_SD_B1_2.dgn
maallen

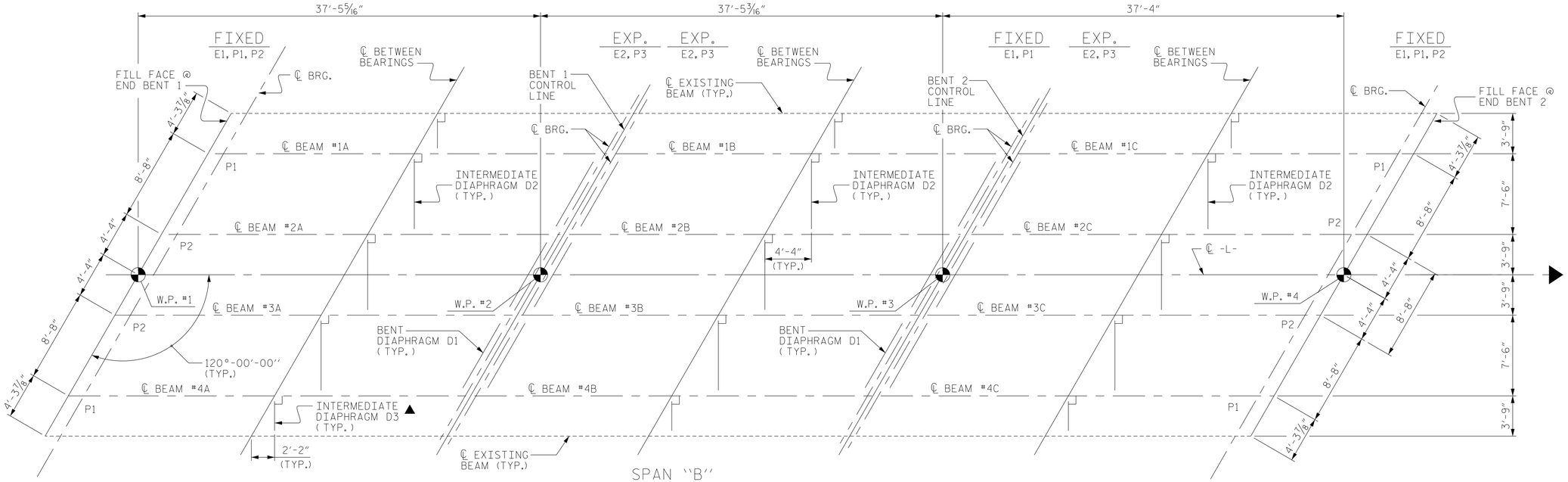

FRAMING PLAN

▲ CONNECTOR PLATES ON EXISTING EXTERIOR BEAMS OR GIRDERS FOR INTERMEDIATE DIAPHRAGMS D3 SHALL BE LOCATED BY THE CONTRACTOR.

STRUCTURAL STEEL QUANTITIES	
APPROXIMATE TOTAL	39,100 lbs

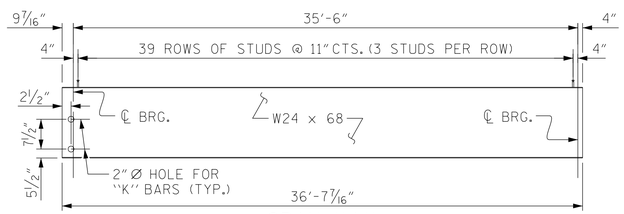

SPAN "A"

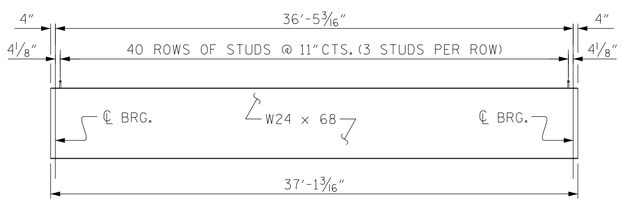

SPAN "B"

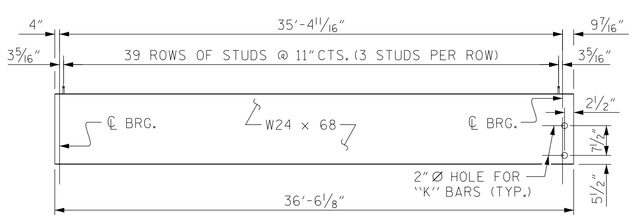

SPAN "C"

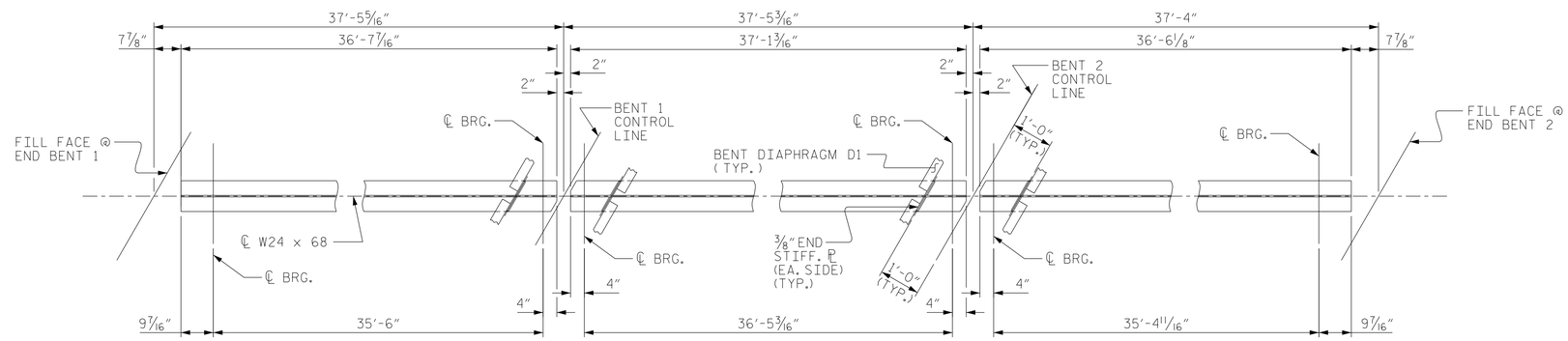

BOTTOM FLANGE DETAIL

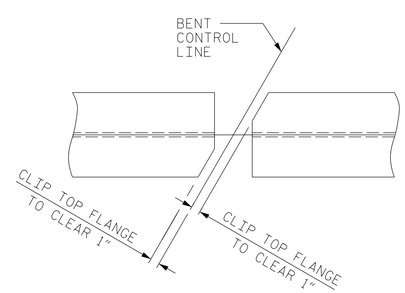

TOP FLANGE CLIP DETAIL

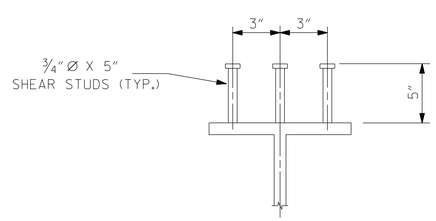

SHEAR STUD DETAILS

BRIDGE NO. 67

WATAUGA COUNTY

STATION: 54+86.50 -L-

STATE OF NORTH CAROLINA
DEPARTMENT OF TRANSPORTATION
RALEIGH

SUPERSTRUCTURE

FRAMING PLAN

NORTH CAROLINA PROFESSIONAL SEAL 23926 ENGINEER BRIAN C. HANKS
7/12/11

REVISIONS						SHEET NO.
NO.	BY:	DATE:	NO.	BY:	DATE:	S-14
1			3			TOTAL SHEETS
2			4			16

DRAWN BY : M.A. ALLEN DATE : 5-11
CHECKED BY : D.N. SNOKE DATE : 6-11

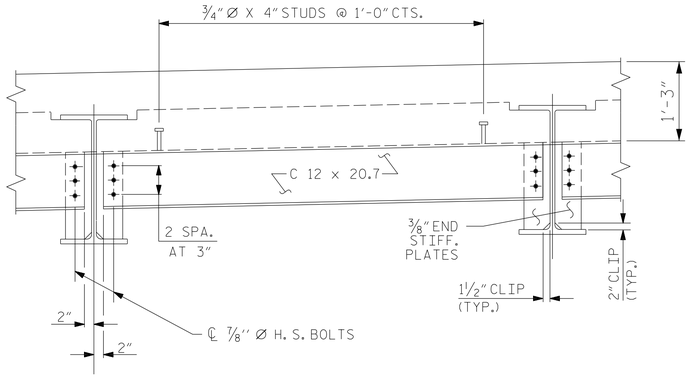

TYPICAL BENT DIAPHRAGM D1

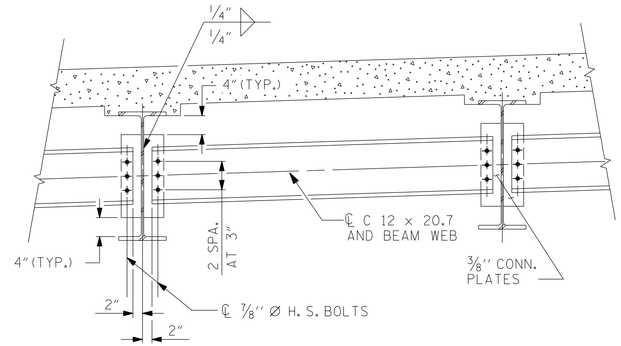

TYPICAL INTERMEDIATE DIAPHRAGM D2

NOTES

ALL STRUCTURAL STEEL SHALL BE AASHTO M270 GRADE 50 AND PAINTED IN ACCORDANCE WITH SYSTEM 1 OF ARTICLE 442-8 OF THE STANDARD SPECIFICATIONS UNLESS OTHERWISE NOTED ON THE PLANS.

ALL DIMENSIONS SHOWN ARE HORIZONTAL OR VERTICAL, UNLESS OTHERWISE NOTED.

ALL FIELD CONNECTIONS TO BE 7/8" DIA. HIGH STRENGTH BOLTS UNLESS OTHERWISE NOTED.

WHERE DIAPHRAGMS ARE TO BE BOLTED TO EXISTING STEEL BEAMS, DO NOT REMOVE PAINT FROM THE CONTACT SURFACE.

NO SHOP CAMBER REQUIRED, TURN NATURAL MILL CAMBER UP.

THE EXISTING BRIDGE IS ON A TANGENT AND 0% GRADE. THE NEW ADDITION SHALL MAINTAIN THE EXISTING ALIGNMENT AND GRADE.

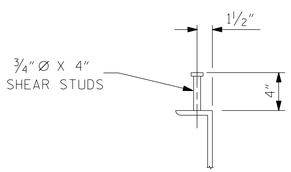

SHEAR STUD DETAILS

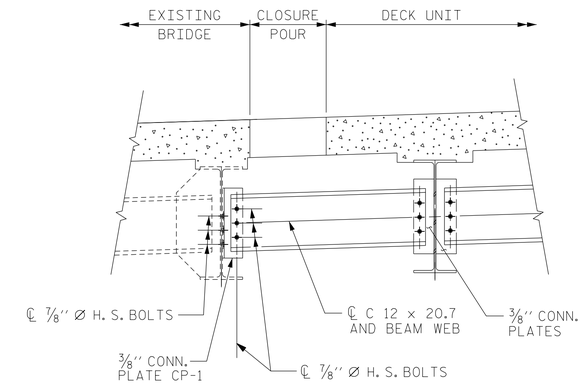

TYPICAL INTERMEDIATE DIAPHRAGM D3

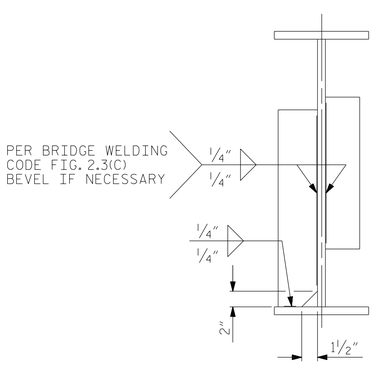

CONN./STIFF. PLATE DETAILS

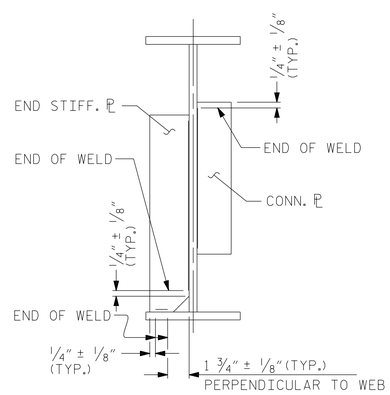

TYPICAL STIFFENER OR
CONNECTOR PLATE CONNECTIONS

WELD TERMINATION DETAILS

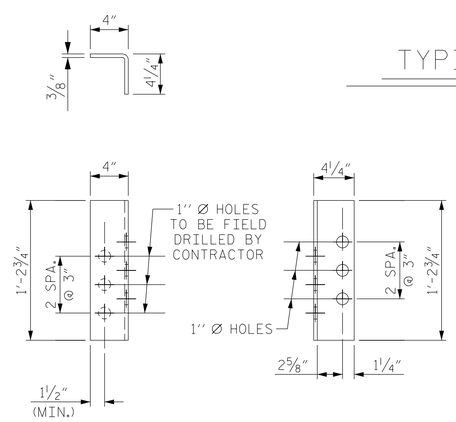

CONNECTOR PLATE DETAIL (CP-1)

(DIAPHRAGM D3 TO EXISTING BEAM)

BRIDGE NO. 67
WATAUGA COUNTY
STATION: 54+86.50 -L-

STATE OF NORTH CAROLINA
DEPARTMENT OF TRANSPORTATION
RALEIGH

SUPERSTRUCTURE

STRUCTURAL STEEL DETAILS

NORTH CAROLINA PROFESSIONAL SEAL 23926 ENGINEER BRIAN C. HAWKS
7/12/11

REVISIONS						SHEET NO.
NO.	BY:	DATE:	NO.	BY:	DATE:	S-15
1			3			TOTAL SHEETS
2			4			16

DRAWN BY : M.A. ALLEN DATE : 5-11
CHECKED BY : D.N. SNOKE DATE : 6-11

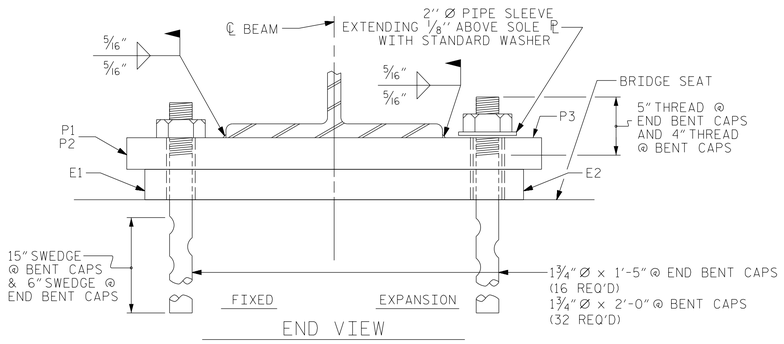

END VIEW

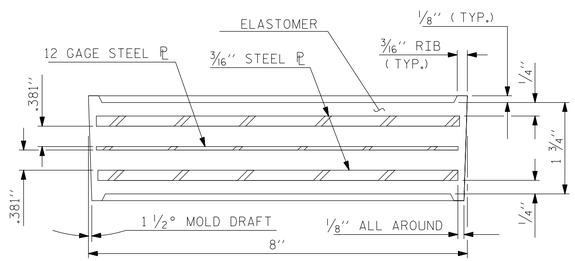

TYPICAL SECTION OF ELASTOMERIC BEARINGS

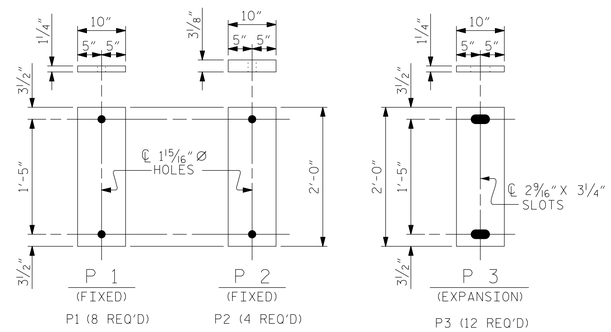

SOLE PLATE DETAILS ("P")

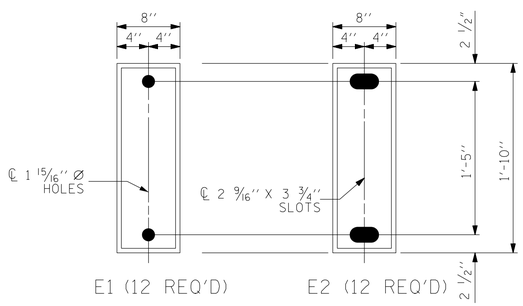

PLAN VIEW OF ELASTOMERIC BEARING

TYPE I

NOTES

AT ALL FIXED POINTS OF SUPPORT, NUTS FOR ANCHOR BOLTS ARE TO BE TIGHTENED FINGER TIGHT AND THEN BACKED OFF 1/2 TURN. THE THREAD OF THE NUT AND BOLT SHALL THEN BE BURRED WITH A SHARP POINTED TOOL.

THE 2" Ø PIPE SLEEVE SHALL BE CUT FROM SCHEDULE 40 PVC PLASTIC PIPE. THE PVC PLASTIC PIPE SHALL MEET THE REQUIREMENTS OF ASTM D1785.

THE PAYMENT FOR THE PIPE SLEEVES SHALL BE INCLUDED IN THE SEVERAL PAY ITEMS.

FOR PAINTED STRUCTURAL STEEL, SOLE PLATES, ANCHOR BOLTS, NUTS AND WASHERS SHALL BE GALVANIZED IN ACCORDANCE WITH THE STANDARD SPECIFICATIONS.

ALL BEARING PLATES SHALL BE AASHTO M270 GRADE 50.

ANCHOR BOLTS SHALL MEET THE REQUIREMENTS OF ASTM A449. NUTS SHALL MEET THE REQUIREMENTS OF AASHTO M291-DH OR AASHTO M292-2H. WASHERS SHALL MEET THE REQUIREMENTS OF AASHTO M293. SHOP DRAWINGS ARE NOT REQUIRED FOR ANCHOR BOLTS, NUTS AND WASHERS. SHOP INSPECTION IS REQUIRED.

WHEN FIELD WELDING THE SOLE PLATE TO THE GIRDER FLANGE, USE TEMPERATURE INDICATING WAX PENS, OR OTHER SUITABLE MEANS, TO ENSURE THAT THE TEMPERATURE OF THE SOLE PLATE DOES NOT EXCEED 300°F. TEMPERATURES ABOVE THIS MAY DAMAGE THE ELASTOMER.

ALL SURFACES OF BEARING PLATES SHALL BE SMOOTH AND STRAIGHT.

—LOAD RATINGS—	
	MAX.D.L.+L.L.
TYPE I	91 K
TYPE II	119 K
TYPE III	144 K

BRIDGE NO. 67

WATAUGA COUNTY

STATION: 54+86.50 -L-

STATE OF NORTH CAROLINA
DEPARTMENT OF TRANSPORTATION
RALEIGH

STANDARD

ELASTOMERIC BEARING DETAILS

(STEEL SUPERSTRUCTURE)

NORTH CAROLINA PROFESSIONAL SEAL 23926 ENGINEER BRIAN C. HANKS
7/12/11

ASSEMBLED BY : M.A. ALLEN	DATE : 6-11		
CHECKED BY : D.N. SNOKE	DATE : 7-11		
DRAWN BY : JMB 11/87	REV. 8/16/99	MAB/LES	
CHECKED BY : ARB 11/87	REV. 10/17/00	RWW/LES	
	REV. 5/1/06	TLA/GM	

REVISIONS								SHEET NO.
NO.	BY:	DATE:	NO.	BY:	DATE:			S-16
1			3					TOTAL SHEETS
2			4					16

STD. NO. EB1 (SHT 1)

STANDARD NOTES

DESIGN DATA:

SPECIFICATIONS	A.A.S.H.T.O. (CURRENT)
LIVE LOAD	SEE PLANS
IMPACT ALLOWANCE	SEE A.A.S.H.T.O.
STRESS IN EXTREME FIBER OF	
STRUCTURAL STEEL - AASHTO M270 GRADE 36	20,000 LBS. PER SQ. IN.
- AASHTO M270 GRADE 50W	27,000 LBS. PER SQ. IN.
- AASHTO M270 GRADE 50	27,000 LBS. PER SQ. IN.
REINFORCING STEEL IN TENSION	
GRADE 60	24,000 LBS. PER SQ. IN.
CONCRETE IN COMPRESSION	1,200 LBS. PER SQ. IN.
CONCRETE IN SHEAR	SEE A.A.S.H.T.O.
STRUCTURAL TIMBER - TREATED OR	
UNTREATED - EXTREME FIBER STRESS	1,800 LBS. PER SQ. IN.
COMPRESSION PERPENDICULAR TO GRAIN OF TIMBER	375 LBS. PER SQ. IN.
EQUIVALENT FLUID PRESSURE OF EARTH	30 LBS. PER CU. FT. (MINIMUM)

MATERIAL AND WORKMANSHIP:

EXCEPT AS MAY OTHERWISE BE SPECIFIED ON PLANS OR IN THE SPECIAL PROVISIONS, ALL MATERIAL AND WORKMANSHIP SHALL BE IN ACCORDANCE WITH THE 2012 "STANDARD SPECIFICATIONS FOR ROADS AND STRUCTURES" OF THE N. C. DEPARTMENT OF TRANSPORTATION.

STEEL SHEET PILING FOR PERMANENT OR TEMPORARY APPLICATIONS SHALL BE HOT ROLLED.

CONCRETE:

UNLESS OTHERWISE REQUIRED ON PLANS, CLASS A CONCRETE SHALL BE USED FOR ALL PORTIONS OF ALL STRUCTURES WITH THE EXCEPTION THAT: CLASS AA CONCRETE SHALL BE USED IN BRIDGE SUPERSTRUCTURES, ABUTMENT BACKWALLS, AND APPROACH SLABS; AND CLASS B CONCRETE SHALL BE USED FOR SLOPE PROTECTION AND RIP RAP.

CONCRETE CHAMFERS:

UNLESS OTHERWISE NOTED ON THE PLANS, ALL EXPOSED CORNERS ON STRUCTURES SHALL BE CHAMFERED 3/4" WITH THE FOLLOWING EXCEPTIONS: TOP CORNERS OF CURBS MAY BE ROUNDED TO 1-1/2" RADIUS WHICH IS BUILT INTO CURB FORMS; CORNERS OF TRANSVERSE FLOOR EXPANSION JOINTS SHALL BE ROUNDED WITH A 1/4" FINISHING TOOL UNLESS OTHERWISE REQUIRED ON PLANS; AND CORNERS OF EXPANSION JOINTS IN THE ROADWAY FACES AND TOPS OF CURBS AND SIDEWALKS SHALL BE ROUNDED TO A 1/4" RADIUS WITH A FINISHING STONE OR TOOL UNLESS OTHERWISE REQUIRED ON PLANS.

DOWELS:

DOWELS WHEN INDICATED ON PLANS AS FOR CULVERT EXTENSIONS, SHALL BE EMBEDDED AT LEAST 12" INTO THE OLD CONCRETE AND GROUTED INTO PLACE WITH 1:2 CEMENT MORTAR.

ALLOWANCE FOR DEAD LOAD DEFLECTION, SETTLEMENT, ETC. IN CASTING SUPERSTRUCTURES:

BRIDGES SHALL BE BUILT ON THE GRADE OR VERTICAL CURVE SHOWN ON PLANS. SLABS, CURBS AND PARAPETS SHALL CONFORM TO THE GRADE OR CURVE.

ALL DIMENSIONS WHICH ARE GIVEN IN SECTION AND ARE AFFECTED BY DEAD LOAD DEFLECTIONS ARE DIMENSIONS AT CENTER LINE OF BEARING UNLESS OTHERWISE NOTED ON PLANS. IN SETTING FORMS FOR STEEL BEAM BRIDGES AND PRESTRESSED CONCRETE GIRDER BRIDGES, ADJUSTMENTS SHALL BE MADE DUE TO THE DEAD LOAD DEFLECTIONS FOR THE ELEVATIONS SHOWN. WHERE BLOCKS ARE SHOWN OVER BEAMS FOR BUILDING UP TO THE SLAB, THE VERTICAL DIMENSIONS OF THE BLOCKS SHALL BE ADJUSTED BETWEEN BEARINGS TO COMPENSATE FOR DEAD LOAD DEFLECTIONS, VERTICAL CURVE ORDINATE, AND ACTUAL BEAM CAMBER. WHERE BOTTOM OF SLAB IS IN LINE WITH BOTTOM OF TOP FLANGES, DEPTH OF SLAB BETWEEN BEARINGS SHALL BE ADJUSTED TO COMPENSATE FOR DEAD LOAD DEFLECTION, VERTICAL CURVE ORDINATE, AND ACTUAL BEAM CAMBER.

IN SETTING FALSEWORK AND FORMS FOR REINFORCED CONCRETE SPANS, AN ALLOWANCE SHALL BE MADE FOR DEAD LOAD DEFLECTIONS, SETTLEMENT OF FALSEWORK, AND PERMANENT CAMBER WHICH SHALL BE PROVIDED FOR IN ADDITION TO THE ELEVATIONS SHOWN. AFTER REMOVAL OF THE FALSEWORK, THE FINISHED STRUCTURES SHALL CONFORM TO THE PROFILE AND ELEVATIONS SHOWN ON THE PLANS AND CONSTRUCTION ELEVATIONS FURNISHED BY THE ENGINEER.

DETAILED DRAWINGS FOR FALSEWORK OR FORMS FOR BRIDGE SUPERSTRUCTURE AND ANY STRUCTURE OR PARTS OF A STRUCTURE AS NOTED ON THE PLANS SHALL BE SUBMITTED TO THE ENGINEER FOR APPROVAL BEFORE CONSTRUCTION OF THE FALSEWORK OR FORMS IS STARTED.

REINFORCING STEEL:

ALL REINFORCING STEEL SHALL BE DEFORMED. DIMENSIONS RELATIVE TO PLACEMENT OF REINFORCING ARE TO CENTERS OF BARS UNLESS OTHERWISE INDICATED IN THE PLANS. DIMENSIONS ON BAR DETAILS ARE TO CENTERS OF BARS OR ARE OUT TO OUT AS INDICATED ON PLANS.

WIRE BAR SUPPORTS SHALL BE PROVIDED FOR REINFORCING STEEL WHERE INDICATED ON THE PLANS. WHEN BAR SUPPORT PIECES ARE PLACED IN CONTINUOUS LINES, THEY SHALL BE SO PLACED THAT THE ENDS OF THE SUPPORTING WIRES SHALL BE LAPPED TO LOCK LEGS ON ADJOINING PIECES.

STRUCTURAL STEEL:

AT THE CONTRACTOR'S OPTION, HE MAY SUBSTITUTE 7/8" Ø SHEAR STUDS FOR THE ¾" Ø STUDS SPECIFIED ON THE PLANS. THIS SUBSTITUTION SHALL BE MADE AT THE RATE OF 3 - 7/8" Ø STUDS FOR 4 - 3/4" Ø STUDS, AND STUD SPACING CHANGES SHALL BE MADE AS NECESSARY TO PROVIDE THE SAME EQUIVALENT NUMBER OF 7/8" Ø STUDS ALONG THE BEAM AS SHOWN FOR 3/4" Ø STUDS BASED ON THE RATIO OF 3 - 7/8" Ø STUDS FOR 4 - 3/4" Ø STUDS. STUDS OF THE LENGTH SPECIFIED ON THE PLANS MUST BE PROVIDED. THE MAXIMUM SPACING SHALL BE 2'-0".

EXCEPT AT THE INTERIOR SUPPORTS OF CONTINUOUS BEAMS WHERE THE COVER PLATE IS IN CONTACT WITH BEARING PLATE, THE CONTRACTOR MAY, AT HIS OPTION, SUBSTITUTE FOR THE COVER PLATES DESIGNATED ON THE PLANS COVER PLATES OF THE EQUIVALENT AREA PROVIDED THESE PLATES ARE AT LEAST 5/16" IN THICKNESS AND DO NOT EXCEED A WIDTH EQUAL TO THE FLANGE WIDTH LESS 2" OR A THICKNESS EQUAL TO 2 TIMES THE FLANGE THICKNESS. THE SIZE OF FILLET WELDS SHALL CONFORM TO THE REQUIREMENTS OF THE CURRENT ANSI/AASHTO/AWS "BRIDGE WELDING CODE". ELECTROSLAG WELDING WILL NOT BE PERMITTED.

WITH THE SOLE EXCEPTION OF EDGES AT SURFACES WHICH BEAR ON OTHER SURFACES, ALL SHARP EDGES AND ENDS OF SHAPES AND PLATES SHALL BE SLIGHTLY ROUNDED BY SUITABLE MEANS TO A RADIUS OF APPROXIMATELY 1/16 INCH OR EQUIVALENT FLAT SURFACE AT A SUITABLE ANGLE PRIOR TO PAINTING, GALVANIZING, OR METALLIZING.

HANDRAILS AND POSTS:

METAL STANDARDS AND FACES OF THE CONCRETE END POSTS FOR THE METAL RAIL SHALL BE SET NORMAL TO THE GRADE OF THE CURB, UNLESS OTHERWISE SHOWN ON PLANS. THE METAL RAIL AND TOPS OF CONCRETE POSTS USED WITH THE ALUMINUM RAIL SHALL BE BUILT PARALLEL TO THE GRADE OF THE CURB.

METAL HANDRAILS SHALL BE IN ACCORDANCE WITH THE PLANS. RAILS SHALL BE AS MANUFACTURED FOR BRIDGE RAILING. CASTINGS SHALL BE OF A UNIFORM APPEARANCE. FINS AND OTHER DEFORMATIONS RESULTING FROM CASTING OR OTHERWISE SHALL BE REMOVED IN A MANNER SO THAT A UNIFORM COLORING OF THE COMPLETED CASTING SHALL BE OBTAINED. CASTINGS WITH DISCOLORATIONS OR OF NON-UNIFORM COLORING WILL NOT BE ACCEPTED. CERTIFIED MILL REPORTS ARE REQUIRED FOR METAL RAILS AND POSTS.

SPECIAL NOTES:

GENERALLY, IN CASE OF DISCREPANCY, THIS STANDARD SHEET OF NOTES SHALL GOVERN OVER THE SPECIFICATIONS, BUT THE REMAINDER OF THE PLANS SHALL GOVERN OVER NOTES HEREON, AND SPECIAL PROVISIONS SHALL GOVERN OVER ALL. SEE SPECIFICATIONS ARTICLE 105-4.

ENGLISH

JANUARY, 1990

STATE OF NORTH CAROLINA
DIVISION OF HIGHWAYS

TRANSPORTATION MANAGEMENT PLAN

WATAUGA COUNTY

DIVISION 11

BRIDGE #67 – US 321 BLOWING ROCK RD. OVER FLANNERY FORK CREEK

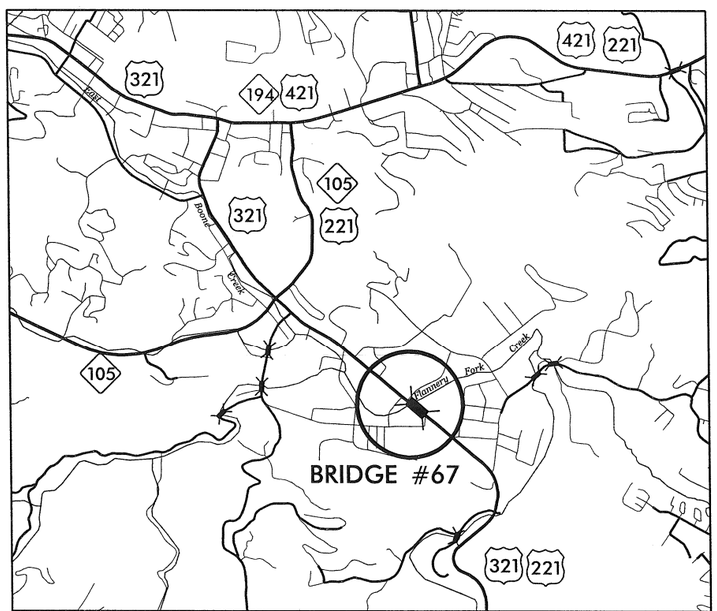

VICINITY MAP

INDEX OF SHEETS

SHEET NO.	TITLE
TMP-1	TITLE SHEET, AND INDEX OF SHEETS
TMP-1A	LIST OF ROADWAY STANDARD DRAWINGS AND LEGEND
TMP-2	GENERAL NOTES
TMP-3	TRAFFIC CONTROL PHASING
TMP-4,4A,4B	REDUCTION OF US 321 TO ONE LANE IN EACH DIRECTION
TMP-5	BOONE HEIGHTS DR. DETOUR ROUTE
TMP-6	US 321 NB ROAD CLOSURE
TMP-7	US 321 NB DETOUR ROUTE
TMP-8	US 321 SB ROAD CLOSURE
TMP-9	US 321 SB DETOUR ROUTE

TRAFFIC MANAGEMENT STRATEGY

PROPOSED REPLACEMENT OF THE EXISTING CENTER PORTION OF BRIDGE #67 WILL BE PERFORMED BY REDUCING TRAFFIC TO ONE LANE IN EACH DIRECTION OF US 321 AND PERFORMING THE WORK BEHIND PORTABLE CONCRETE BARRIER. REMOVAL AND ERECTION OF DECK SECTIONS WILL BE PERFORMED BY CLOSING ONE DIRECTION OF US 321 AT A TIME, DURING TIME RESTRICTED HOURS. REFER TO SHEET TMP-3 FOR TRAFFIC CONTROL PHASING.

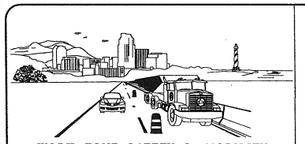

PLAN PREPARED FOR NCDOT BRIDGE MANAGEMENT UNIT
RALEIGH, NC

DIVISION OF HIGHWAYS · STATE OF NORTH CAROLINA · DEPARTMENT OF TRANSPORTATION · WORK ZONE TRAFFIC CONTROL

PLAN PREPARED BY:
Stantec Consulting Services Inc.
801 Jones Franklin Road-Suite 300
Raleigh, NC 27606
Tel. 919.851.6866
Fax. 919.851.7024
www.stantec.com

BETSY L. WATSON, P.E. — TRAFFIC ENGINEER
GEORGE KARAGEORGE — TRANSPORTATION DESIGNER

APPROVED: Betsy L. Watson
DATE: 11/8/11
SEAL: NORTH CAROLINA PROFESSIONAL SEAL 29449 ENGINEER BETSY L. WATSON

SHEET NO. TMP-1

WBS 17BP.11.H.1

10/28/2011
U:\Traffic\TrafficControl\WBS 17BP.11.H.1 Watauga 67\TCP\Plan Sheets\17BP.11.H.1_TC_TMP_01_TITLE.dgn
gkarageorge

PROJ. REFERENCE NO.	SHEET NO.
17BP.11.H.1	TMP-1A

LEGEND

DIRECTION OF TRAFFIC FLOW

DIRECTION OF PEDESTRIAN TRAFFIC FLOW

WORK AREA

NORTH ARROW

TYPE III BARRICADE

CONE

DRUM SKINNY DRUM TUBULAR MARKER

CHANGEABLE MESSAGE SIGN (CMS)

FLAGGER

FLASHING ARROW PANEL (TYPE C)

LAW ENFORCEMENT

TRUCK MOUNTED IMPACT ATTENUATOR (TMIA)

PORTABLE CONCRETE BARRIER (PCB)

TEMPORARY CRASH CUSHION

TEMPORARY SHORING

WORK ZONE SIGN-PORTABLE

WORK ZONE SIGN-STATIONARY

WORK ZONE SIGN-STATIONARY OR PORTABLE

SIGNALS

EXISTING PROPOSED TEMPORARY

PAVEMENT MARKINGS

EXISTING PAVEMENT MARKING (GRAY)

SKIP LINES

MINI-SKIP LINES

SOLID LINES

PAVEMENT MARKING SYMBOLS

PAVEMENT MARKING SYMBOLS

EXISTING PAVEMENT MARKING SYMBOLS (HOLLOW)

ONLY PAVEMENT MARKING ALPHANUMERIC CHARACTERS

PAVEMENT MARKERS

CRYSTAL/CRYSTAL

CRYSTAL/RED

YELLOW/YELLOW

ROADWAY STANDARD DRAWINGS

THE FOLLOWING ROADWAY STANDARDS AS APPEAR IN "ROADWAY STANDARD DRAWINGS" - PROJECT SERVICES UNIT - N.C. DEPARTMENT OF TRANSPORTATION - RALEIGH, N.C., DATED JULY 2006 ARE APPLICABLE TO THIS PROJECT AND BY REFERENCE HEREBY ARE CONSIDERED A PART OF THESE PLANS:

STD. NO.	TITLE
1101.02	TEMPORARY LANE CLOSURES
1101.04	TEMPORARY SHOULDER CLOSURES
1101.11	TRAFFIC CONTROL DESIGN TABLES
1110.01	STATIONARY WORK ZONE SIGNS
1110.02	PORTABLE WORK ZONE SIGNS
1115.01	FLASHING ARROW PANELS
1130.01	DRUMS
1145.01	BARRICADES
1150.01	FLAGGING DEVICES
1160.01	TEMPORARY CRASH CUSHION
1165.01	TRUCK MOUNTED IMPACT ATTENUATOR
1170.01	PORTABLE CONCRETE BARRIER
1180.01	SKINNY DRUMS
1205.01	PAVEMENT MARKINGS - LINE TYPES & OFFSETS
1205.02	PAVEMENT MARKINGS - 2 LANE & MULTILANE ROADWAYS
1205.04	PAVEMENT MARKINGS - INTERSECTIONS
1205.05	PAVEMENT MARKINGS - TURN LANES
1205.08	PAVEMENT MARKINGS - SYMBOLS & WORD MESSAGES
1250.01	PAVEMENT MARKER SPACING
1253.01	SNOWPLOWABLE RAISED PAVEMENT MARKERS

Stantec
Stantec Consulting Services Inc.
801 Jones Franklin Road
Suite 300
Raleigh, NC 27606
Tel. (919) 851-6866
Fax. (919) 851-7024
www.stantec.com
License No. F-0672

APPROVED:_____ DATE:_____

SEAL

NORTH CAROLINA PROFESSIONAL SEAL 20449 ENGINEER BETSY L. WATSON 11/1/11

DIVISION OF HIGHWAYS * STATE OF NORTH CAROLINA * DEPARTMENT OF TRANSPORTATION * WORK ZONE TRAFFIC CONTROL

ROADWAY STANDARD DRAWINGS
&
LEGEND

10/28/2011
U:\Traffic\TrafficControl\WBS 17BP.11.H.1 Watauga 67\TCP\Plan Sheets\17BP.11.H.1_TC_TMP_OIA_RDWYSTDSLEGEND.dgn
gkarageorge

PROJ. REFERENCE NO.	SHEET NO.
17BP.11.H.1	TMP-2

GENERAL NOTES

THE FOLLOWING GENERAL NOTES APPLY AT ALL TIMES FOR THE DURATION OF THE PROJECT EXCEPT WHEN OTHERWISE NOTED IN THE PLAN OR DIRECTED BY THE ENGINEER.

CHANGES MAY BE REQUIRED WHEN PHYSICAL DIMENSIONS IN THE DETAIL DRAWINGS, STANDARD DETAILS, AND ROADWAY DETAILS ARE NOT ATTAINABLE TO MEET FIELD CONDITIONS OR RESULT IN DUPLICATE OR UNDESIRED OVERLAPPING OF DEVICES. MODIFICATION MAY INCLUDE: MOVING, SUPPLEMENTING, COVERING, OR REMOVAL OF DEVICES AS DIRECTED BY THE ENGINEER.

A) DO NOT CLOSE ROADS OR STOP TRAFFIC AS FOLLOWS:

ROAD NAME	DAY AND TIME RESTRICTIONS
US 221/321 (BLOWING ROCK RD.)	6:00 A.M.-11:00 P.M. MONDAY-THURSDAY AND 6:00 A.M. FRIDAY -11:00 P.M. SUNDAY

HOLIDAY & HOLIDAY WEEKEND ROAD CLOSURE TIME RESTRICTIONS

B) DO NOT CLOSE ROADS OR STOP TRAFFIC DURING HOLIDAYS AND HOLIDAY WEEKENDS AS FOLLOWS:

ROAD NAME
ALL ROADS

1) FOR ANY UNEXPECTED OCCURRENCE THAT CREATES UNUSUALLY HIGH TRAFFIC VOLUMES, AS DIRECTED BY THE ENGINEER.

2) FOR NEW YEAR'S, BETWEEN THE HOURS OF 6:00 A.M. DECEMBER 31st TO 11:00 P.M. JANUARY 2nd. IF NEW YEAR'S DAY IS ON A FRIDAY, SATURDAY, SUNDAY, OR MONDAY THEN UNTIL 11:00 P.M. THE FOLLOWING TUESDAY.

3) FOR EASTER, BETWEEN THE HOURS OF 6:00 A.M. THURSDAY AND 11:00 P.M. MONDAY.

4) FOR MEMORIAL DAY, BETWEEN THE HOURS OF 6:00 A.M. FRIDAY TO 11:00 P.M. TUESDAY.

5) FOR INDEPENDENCE DAY, BETWEEN THE HOURS OF 6:00 A.M. THE DAY BEFORE INDEPENDENCE DAY AND 11:00 P.M. THE DAY AFTER INDEPENDENCE DAY. IF INDEPENDENCE DAY IS ON A FRIDAY, SATURDAY, SUNDAY OR MONDAY; THEN BETWEEN THE HOURS OF 6:00 A.M. THE THURSDAY BEFORE INDEPENDENCE DAY AND 11:00 P.M. THE TUESDAY AFTER INDEPENDENCE DAY.

6) FOR LABOR DAY, BETWEEN THE HOURS OF 6:00 A.M. FRIDAY AND 11:00 P.M. TUESDAY.

7) FOR THANKSGIVING DAY, BETWEEN THE HOURS OF 6:00 A.M. TUESDAY TO 11:00 P.M. MONDAY.

8) FOR CHRISTMAS, BETWEEN THE HOURS OF 6:00 A.M. THE FRIDAY BEFORE THE WEEK OF CHRISTMAS DAY AND 11:00 P.M. THE FOLLOWING TUESDAY AFTER THE WEEK OF CHRISTMAS.

LANE AND SHOULDER CLOSURE REQUIREMENTS

C) LANE CLOSURES ARE REQUIRED WHEN PERSONNEL AND/OR EQUIPMENT ARE WORKING WITHIN ANY PORTION OF A TRAVEL LANE. CONDUCT THE WORK SO THAT ALL PERSONNEL AND/OR EQUIPMENT REMAIN WITHIN THE CLOSED TRAVEL LANE.

D) INSTALL ALL LANE CLOSURES ACCORDING TO THE PLANS, ROADWAY STANDARD DRAWINGS (1101.02), OR AS DIRECTED BY THE ENGINEER.

E) REMOVE LANE CLOSURE DEVICES FROM THE LANE WHEN WORK IS NOT BEING PERFORMED BEHIND THE LANE CLOSURE OR WHEN A LANE CLOSURE IS NO LONGER NEEDED OR AS DIRECTED BY THE ENGINEER. COVER OR LAY DOWN SIGNS, AND TURN OFF ARROW PANEL AND MESSAGE BOARDS.

F) INSTALL LANE CLOSURES WITH THE TRAFFIC FLOW, BEGINNING WITH DEVICES ON THE UPSTREAM SIDE OF TRAFFIC. REMOVE LANE CLOSURES AGAINST THE TRAFFIC FLOW, BEGINNING WITH DEVICES ON THE DOWNSTREAM SIDE OF TRAFFIC.

G) WHEN PERSONNEL AND/OR EQUIPMENT ARE WORKING WITHIN 15 FT OF AN OPEN TRAVEL LANE, CLOSE THE NEAREST OPEN SHOULDER USING ROADWAY STANDARD DRAWING NO. 1101.04 UNLESS THE WORK AREA IS PROTECTED BY BARRIER OR GUARDRAIL OR A LANE CLOSURE IS INSTALLED.

H) UNLESS OTHERWISE SHOWN IN THE PLANS, PLACE ARROW PANELS ON THE ROADWAY SHOULDER. IF SHOULDERS DO NOT EXIST, PLACE ARROW PANELS WITHIN THE MERGE TAPER BEHIND THE CHANNELIZING DEVICES OF THE LANE CLOSURE. IF NEEDED, EXTEND LANE CLOSURES TO PROVIDE STOPPING SIGHT DISTANCE TO THE ARROW PANEL (REFER TO ROADWAY STANDARD DRAWING 1101.11 SHEET 2).

I) PLACE LANE CLOSURE DRUMS IN TAPERS AT A MAXIMUM SPACING EQUAL IN FEET TO THE POSTED SPEED LIMIT (MPH). ALONG BUFFER SPACES AND WORK AREAS SPACE DRUMS AT A MAXIMUM SPACING EQUAL IN FEET TO TWICE THE POSTED SPEED LIMIT (MPH). IN ALL CASES, CHANNELIZING DEVICES ARE TO BE SPACED IN SUCH A MANNER AS TO POSITIVELY ACHIEVE THE INTENDED VISUAL CHANNELIZATION. CHANNELIZING DEVICES SHOULD BE LATERALLY OFFSET 3 FT INSIDE THE CLOSED LANE AS ROOM PERMITS.

J) WHENEVER TAPERS ARE TO BE USED IN CLOSE PROXIMITY TO AN INTERCHANGE RAMP,CROSSROADS, CURVES, OR OTHER INFLUENCING FACTORS, THE LENGTH OF THE TAPERS MAY BE ADJUSTED.

FLAGGERS & PILOT CARS

K) FLAGGERS SHALL NOT STAND IN THE ROADWAY.

L) USE FLAGGER SIGN W20-7A IN ADVANCE OF ALL FLAGGER STATIONS.

M) FLAGGER STATIONS SHALL BE ILLUMINATED AT NIGHT.

N) USE PILOT VEHICLES WHEN SHOWN IN THE PLAN OR WHEN DIRECTED BY THE ENGINEER. MOUNT SIGN G20-4 "PILOT CAR FOLLOW ME" AT A VISIBLE LOCATION ON THE REAR OF PILOT VEHICLES.

ROAD CLOSURES

O) PROVIDE OFFSITE DETOUR ROUTE SIGNING AS SHOWN IN THE TRAFFIC MANAGEMENT PLAN. COVER OR REMOVE DETOUR SIGNING WHEN A DETOUR IS NOT IN OPERATION. ALL DETOUR ROUTES MUST BE APPROVED BY THE ENGINEER PRIOR TO IMPLEMENTING.

TEMPORARY TRAFFIC BARRIER

P) INSTALL TEMPORARY BARRIER ACCORDING TO THE PLANS A MAXIMUM OF ONE(1) WEEK PRIOR TO BEGINNING WORK IN ANY LOCATION. ONCE TEMPORARY BARRIER IS INSTALLED, PROCEED IN A CONTINUOUS MANNER TO COMPLETE THE PROPOSED WORK IN THAT LOCATION, UNLESS OTHERWISE STATED IN THE PLANS OR DIRECTED BY THE ENGINEER.

Q) INSTALL TEMPORARY BARRIER WITH THE TRAFFIC FLOW, BEGINNING WITH THE UPSTREAM SIDE OF TRAFFIC. REMOVE TEMPORARY BARRIER AGAINST THE TRAFFIC FLOW, BEGINNING WITH THE DOWNSTREAM SIDE OF TRAFFIC.

R) INSTALL AND SPACE DRUMS NO GREATER THAN TWICE THE POSTED SPEED LIMIT (MPH) TO CLOSE OR KEEP THE SECTION OF THE ROADWAY CLOSED UNTIL THE TEMPORARY BARRIER CAN BE PLACED OR AFTER THE TEMPORARY BARRIER IS REMOVED.

S) PROTECT THE APPROACH END OF PORTABLE CONCRETE BARRIER AT ALL TIMES DURING THE INSTALLATION AND REMOVAL OF THE BARRIER BY EITHER A TRUCK MOUNTED IMPACT ATTENUATOR (MAXIMUM 72 HOURS) OR A TEMPORARY CRASH CUSHION.

PAVEMENT MARKINGS AND MARKERS

T) RECORD ALL LOCATIONS AND TYPES OF EXISTING PAVEMENT MARKINGS AS THEY WILL BE REPLACED IN THE SAME LOCATION ON THE NEW SURFACE.

U) TIE NEW PAVEMENT MARKING LINES TO EXISTING PAVEMENT MARKING LINES.

V) REPLACE ANY PAVEMENT MARKINGS AND MARKERS BEFORE RE-OPENING LANES TO TRAFFIC.

W) UPON COMPLETION OF ALL OTHER CONSTRUCTION OPERATIONS INSTALL PAVEMENT MARKINGS AND PAVEMENT MARKERS ON THE FINAL SURFACE AS FOLLOWS:

ROAD NAME	MARKING	PAVEMENT MARKER
US 321 BLOWING ROCK RD.	PAINT	SNOWPLOWABLE

MISCELLANEOUS

X) LAW ENFORCEMENT MAY BE USED TO MAINTAIN TRAFFIC THROUGH THE WORK AREA AND/OR INTERSECTIONS AS DIRECTED BY THE ENGINEER. LOCATIONS SHOWN IN THE PLANS ARE APPROXIMATE AND MAY BE REVISED AS THE OFFICER OR THE ENGINEER DEEM NECESSARY.

Y) MAINTAIN SIDEWALK ACCESS AT ALL TIMES.

Z) ALL DIMENSIONS AND STATIONS IN THE TRAFFIC MANAGEMENT PLAN AND PHASING ARE APPROXIMATE (+/-); FIELD ADJUST AS NECESSARY OR AS DIRECTED BY THE ENGINEER.

AA) MAINTAIN DRIVEWAY ACCESS AT ALL TIMES, UNLESS OTHERWISE DIRECTED BY ENGINEER.

BB) ENSURE THE OVERSIZE/OVERWEIGHT PERMIT UNIT (919) 733-4740 HAS BEEN ADVISED OF THE ONGOING TRAFFIC OPERATIONS THROUGH THE DIVISION OFFICE.

CC) CHANGEABLE MESSAGE SIGN MESSAGES SHOWN ARE EXAMPLES. OTHER MESSAGES MAY BE USED AS CONDITIONS WARRANT. ALL MESSAGES AND LOCATIONS MUST BE APPROVED BY THE ENGINEER PRIOR TO INCORPORATING.

Stantec
Stantec Consulting Services Inc.
801 Jones Franklin Road
Suite 300
Raleigh, NC 27606
Tel. (919) 851-6866
Fax. (919) 851-7024
www.stantec.com
License No. F-0672

APPROVED:_____ DATE:_____

SEAL

NORTH CAROLINA PROFESSIONAL SEAL 19449 ENGINEER BETSY L. WATSON

11/1/11

DIVISION OF HIGHWAYS STATE OF NORTH CAROLINA DEPARTMENT OF TRANSPORTATION WORK ZONE TRAFFIC CONTROL

GENERAL NOTES

10/28/2011
U:\Traffic\TrafficControl\WBS 17BP.11.H.1 Watauga 67\TCP\Plan Sheets\17BP.11.H.1_TC_TMP_02_ GENERALNOTES.dgn
gkarageorge

PROJ. REFERENCE NO.	SHEET NO.
17BP.11.H.1	TMP-3

TRAFFIC CONTROL PHASING

STEP 1: (TMP-4,4A,4B,5)

1A)
INSTALL DETOUR SIGNING FOR BOONE HEIGHTS DR. (TMP-5)

1B)
INSTALL NO LEFT TURN SIGNS AND CLOSE LEFT TURN LANES AT BOONE HEIGHTS DR. AND WATAUGA VILLAGE DR. (TMP-4A).

1C)
CLOSE RIGHT TURN LANE COMING OUT OF LOWES PARKING LOT(TMP-4A).

1D)
INSTALL REMAINDER OF NO LEFT TURN SIGNS (TMP-4A).

STEP 2: (TMP-4,4A,4B)

INSTALL LEFT LANE CLOSURES, AND REMAINING TRAFFIC CONTROL DEVICES FOR BOTH DIRECTIONS OF US 321.

STEP 3: (TMP-4,4A,4B)

INSTALL CRASH CUSHIONS AND PORTABLE CONCRETE BARRIER AND ANCHOR BARRIER TO PAVEMENT.

STEP 4:

WITH TRAFFIC OPERATING IN THE TRAFFIC PATTERN SHOWN ON SHEETS TMP-4,4A,4B PERFORM BRIDGE WORK BEHIND PORTABLE CONCRETE BARRIER.

DURING REMOVAL AND REPLACEMENT OF THE BRIDGE DECK, EACH DIRECTION OF US 321 MAY BE CLOSED INDIVIDUALLY IN ORDER FOR CRANES AND OTHER EQUIPMENT TO HAVE ACCESS AS SHOWN ON SHEETS TMP-6 AND TMP-8. USE POLICE OFFICERS AND PILOT CARS TO STOP AND DIRECT TRAFFIC AROUND THE WORK AREA, ALTERNATING EACH DIRECTION OF TRAFFIC. TRAFFIC SHOULD NOT BE STOPPED MORE THAN 5 MINUTES AT A TIME. REFER TO GENERAL NOTE A FOR ROAD CLOSURE TIME RESTRICTIONS FOR THESE OPERATIONS.

ALTERNATE ROUTES MAY BE PROVIDED FOR US 321 NB/SB AS SHOWN ON SHEETS TMP-7 AND TMP-9. THE ALTERNATE ROUTES SHOULD BE IMPLEMENTED AS DIRECTED BY THE ENGINEER. ALTERNATE ROUTES FOR BOTH DIRECTIONS MAY BE IMPLEMENTED SIMULTANEOULSY AS THE NEED ARISES AND AS DIRECTED BY THE ENGINEER.

STEP 5:

UPON COMPLETION OF ALL BRIDGE WORK REPLACE PAVEMENT MARKINGS AND MARKERS.

STEP 6:

UPON COMPLETION OF ALL WORK REMOVE TRAFFIC CONTROL DEVICES FROM PROJECT.

Stantec
Stantec Consulting Services Inc.
801 Jones Franklin Road
Suite 300
Raleigh, NC 27606
Tel. (919) 851-6866
Fax. (919) 851-7024
www.stantec.com
License No. F-0672

APPROVED: _____ DATE: _____

SEAL

NORTH CAROLINA PROFESSIONAL SEAL 29449 ENGINEER BETSY L. WATSON

11/1/11

DIVISION OF HIGHWAYS * STATE OF NORTH CAROLINA * DEPARTMENT OF TRANSPORTATION * WORK ZONE TRAFFIC CONTROL

TRAFFIC CONTROL PHASING

10/28/2011
U:\Traffic\TrafficControl\WBS 17BP.11.H.1 Watauga 67\TCP\Plan Sheets\17BP.11.H.1_TC_TMP_03_PHASING.dgn
gkarageorge

PROJ. REFERENCE NO.	SHEET NO.
17BP.11.H.1	TMP-4

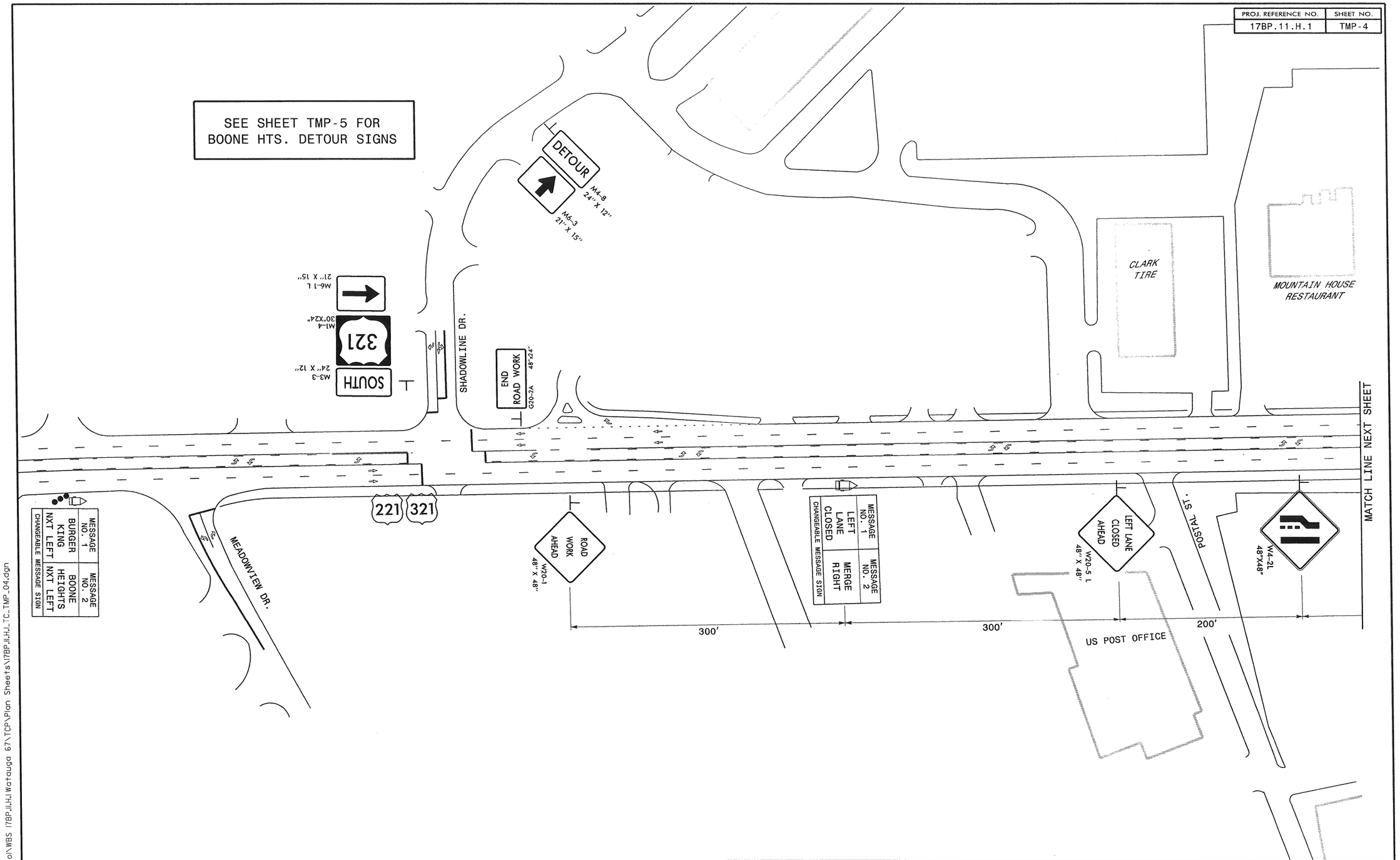

10/28/2011
U:\Traffic\TrafficControl\WBS 17BP.11.H.1 Watauga 67\TCP\Plan Sheets\17BP.11.H.1_TC_TMP_04.dgn
akaragaorge

Stantec

Stantec Consulting Services Inc.
801 Jones Franklin Road
Suite 300
Raleigh, NC 27606
Tel. (919) 851-6866
Fax. (919) 851-7024
www.stantec.com
License No. F-0672

APPROVED: _____ DATE: _____

SEAL

NORTH CAROLINA PROFESSIONAL SEAL 19349 ENGINEER BETSY L. WATSON

11/1/11

DIVISION OF HIGHWAYS
STATE OF NORTH CAROLINA
DEPARTMENT OF TRANSPORTATION
WORK ZONE TRAFFIC CONTROL

REDUCTION OF US 321 TO ONE LANE IN EACH DIRECTION

PROJ. REFERENCE NO.	SHEET NO.
17BP.11.H.1	TMP-4A

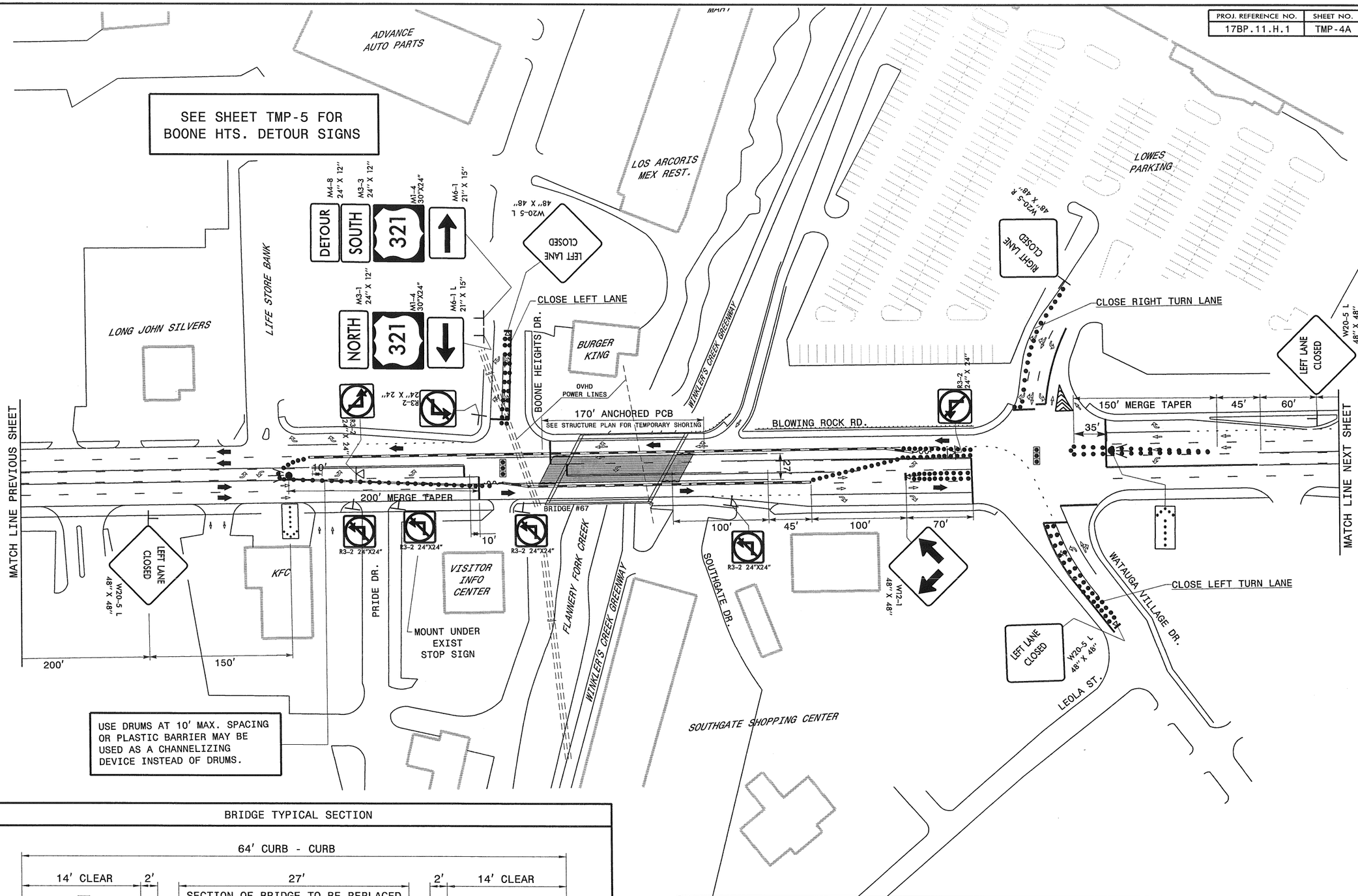

BRIDGE TYPICAL SECTION

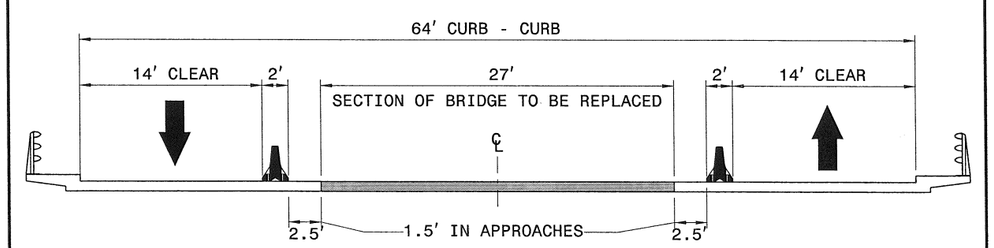

Stantec
Stantec Consulting Services Inc.
801 Jones Franklin Road
Suite 300
Raleigh, NC 27606
Tel. (919) 851-6866
Fax. (919) 851-7024
www.stantec.com
License No. F-0672

APPROVED:_____ DATE:_____

SEAL

NORTH CAROLINA PROFESSIONAL SEAL 29449 ENGINEER BETSY L. WATSON

12/20/11

DIVISION OF HIGHWAYS · STATE OF NORTH CAROLINA · DEPARTMENT OF TRANSPORTATION · WORK ZONE TRAFFIC CONTROL

REDUCTION OF US 321 TO ONE LANE IN EACH DIRECTION

12/20/2011
U:\Traffic\TrafficControl\WBS 17BP.11.H.1 Watauga 67\TCP\Plan Sheets\17BP.11.H.1_TC_TMP_04A.dgn
gkcargagorge

PROJ. REFERENCE NO.	SHEET NO.
17BP.11.H.1	TMP-4B

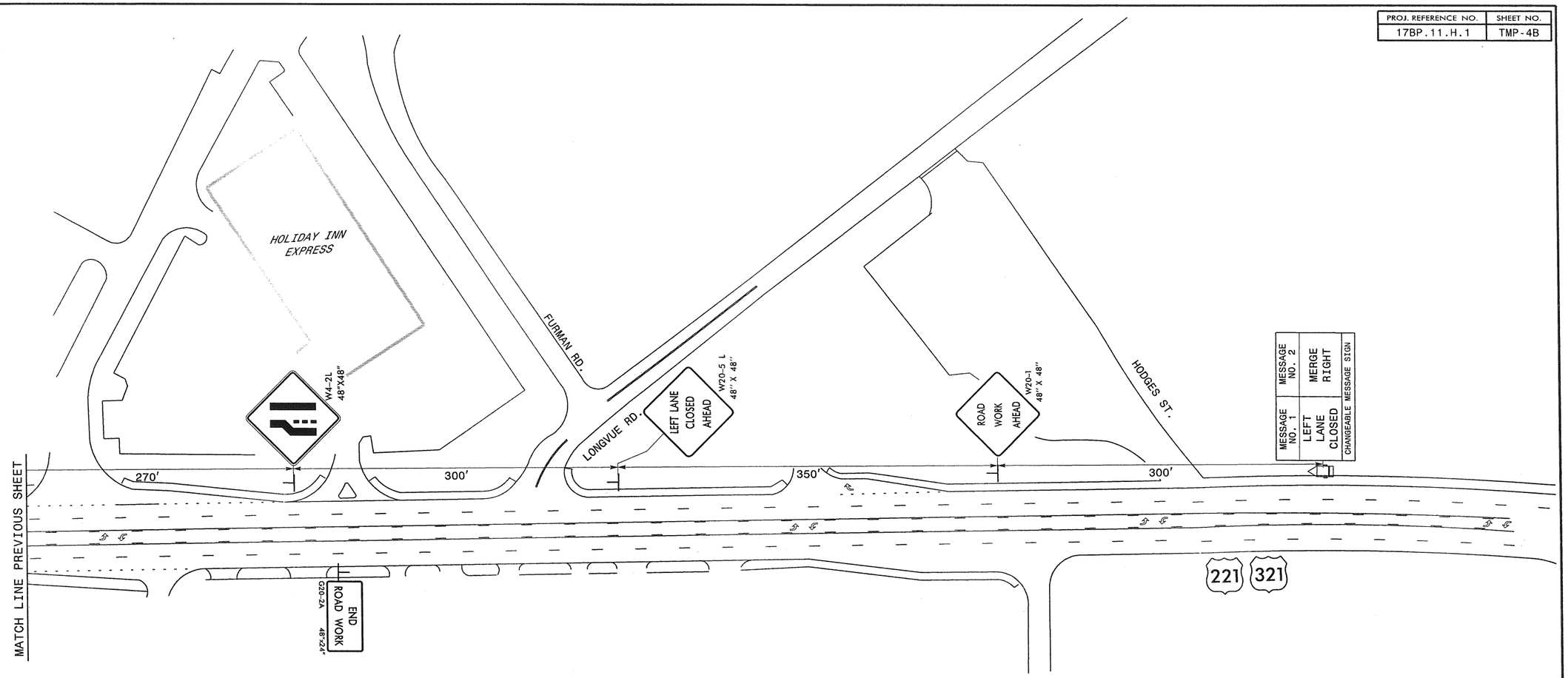

Stantec

Stantec Consulting Services Inc.
801 Jones Franklin Road
Suite 300
Raleigh, NC 27606
Tel. (919) 851-6866
Fax. (919) 851-7024
www.stantec.com
License No. F-0672

APPROVED: _____ DATE: _____

SEAL

NORTH CAROLINA PROFESSIONAL SEAL 16249 ENGINEER BETSY L. WATSON

11/1/11

DIVISION OF HIGHWAYS
STATE OF NORTH CAROLINA
DEPARTMENT OF TRANSPORTATION
WORK ZONE TRAFFIC CONTROL

REDUCTION OF
US 321 TO ONE LANE
IN EACH DIRECTION

10/28/2011
U:\Traffic\TrafficControl\WBS 17BP.11.H.1 Watauga 67\TCP\Plan Sheets\17BP.11.H.1_TC_TMP_04B.dgn
gkarageorge

PROJ. REFERENCE NO.	SHEET NO.
17BP.11.H.1	TMP-5

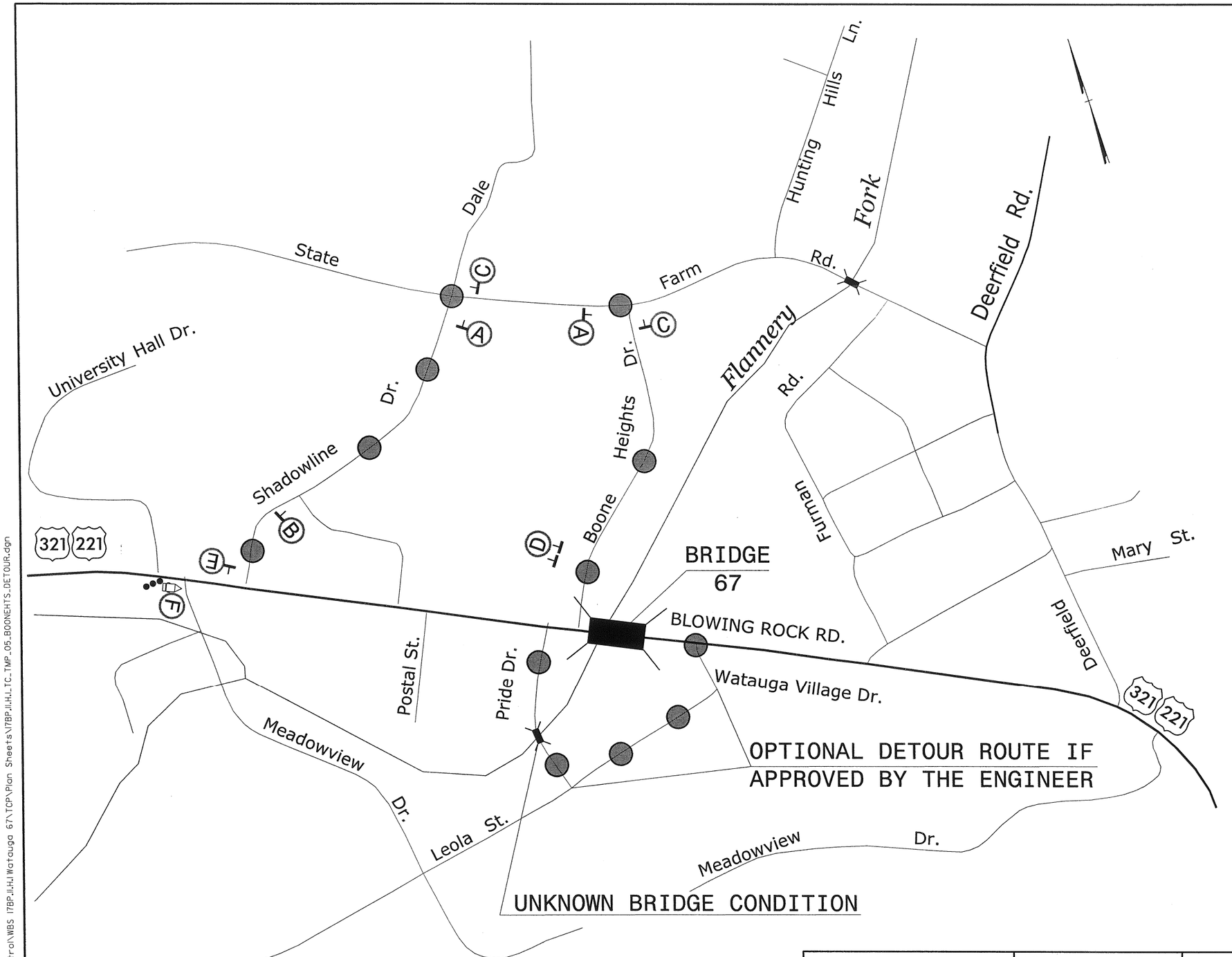

A

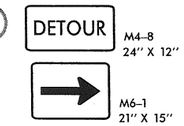

B

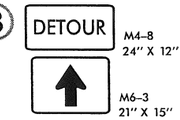

C

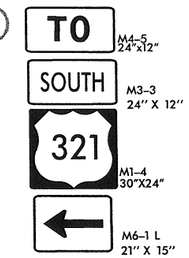

D

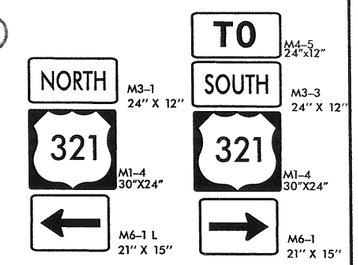

E

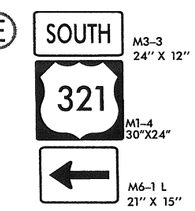

F

MESSAGE NO. 1	MESSAGE NO. 2
BURGER KING NXT LEFT	BOONE HEIGHTS NXT LEFT
CHANGEABLE MESSAGE SIGN	

Stantec
Stantec Consulting Services Inc.
801 Jones Franklin Road
Suite 300
Raleigh, NC 27606
Tel. (919) 851-6866
Fax. (919) 851-7024
www.stantec.com
License No. F-0672

APPROVED: _____ DATE: _____

SEAL

NORTH CAROLINA PROFESSIONAL ENGINEER SEAL 19449 BETSY L. WATSON

11/1/11

DIVISION OF HIGHWAYS
STATE OF NORTH CAROLINA
DEPARTMENT OF TRANSPORTATION
WORK ZONE TRAFFIC CONTROL

BOONE HEIGHTS DR.
DETOUR ROUTE

10/28/2011
U:\Traffic\TrafficControl\WBS 17BP.11.H.1 Watauga 67\TCP\Plan Sheets\17BP.11.H.1_TC_TMP_05_BOONEHTS_DETOUR.dgn
gkorgeorge

PROJ. REFERENCE NO.	SHEET NO.
17BP.11.H.1	TMP-6

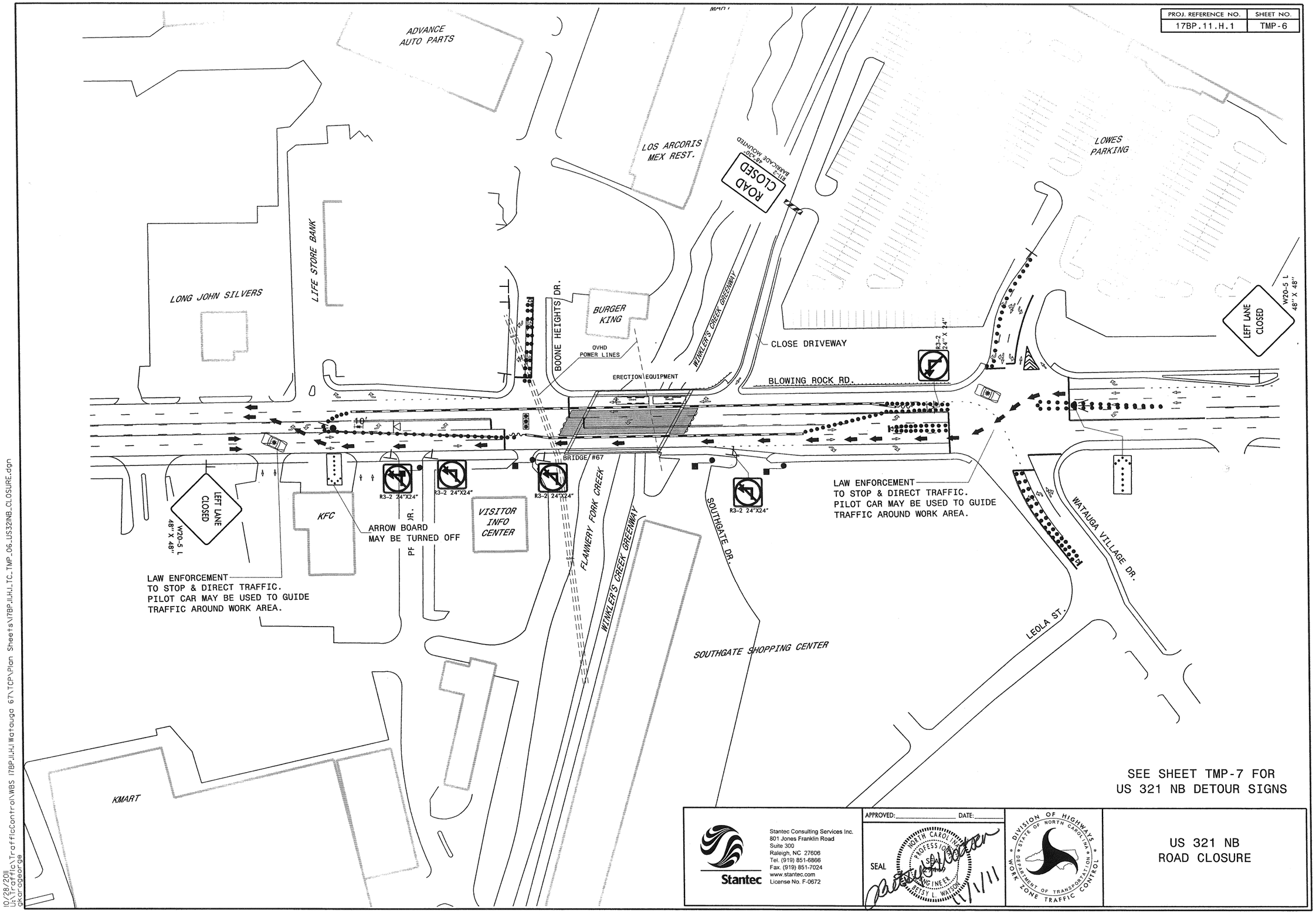

SEE SHEET TMP-7 FOR US 321 NB DETOUR SIGNS

Stantec
Stantec Consulting Services Inc.
801 Jones Franklin Road
Suite 300
Raleigh, NC 27606
Tel. (919) 851-6866
Fax. (919) 851-7024
www.stantec.com
License No. F-0672

APPROVED: _____ DATE: _____

SEAL

NORTH CAROLINA PROFESSIONAL SEAL ENGINEER BETSY L. WATSON

10/1/11

DIVISION OF HIGHWAYS • STATE OF NORTH CAROLINA • DEPARTMENT OF TRANSPORTATION • WORK ZONE TRAFFIC CONTROL

US 321 NB
ROAD CLOSURE

10/28/2011
U:\Traffic\TrafficControl\WBS 17BP.11.H.1 Watauga 67\TCP\Plan Sheets\17BP.11.H.1_TC_TMP_06_US321NB_CLOSURE.dgn
gkarageorge

PROJ. REFERENCE NO.	SHEET NO.
17BP.11.H.1	TMP-7

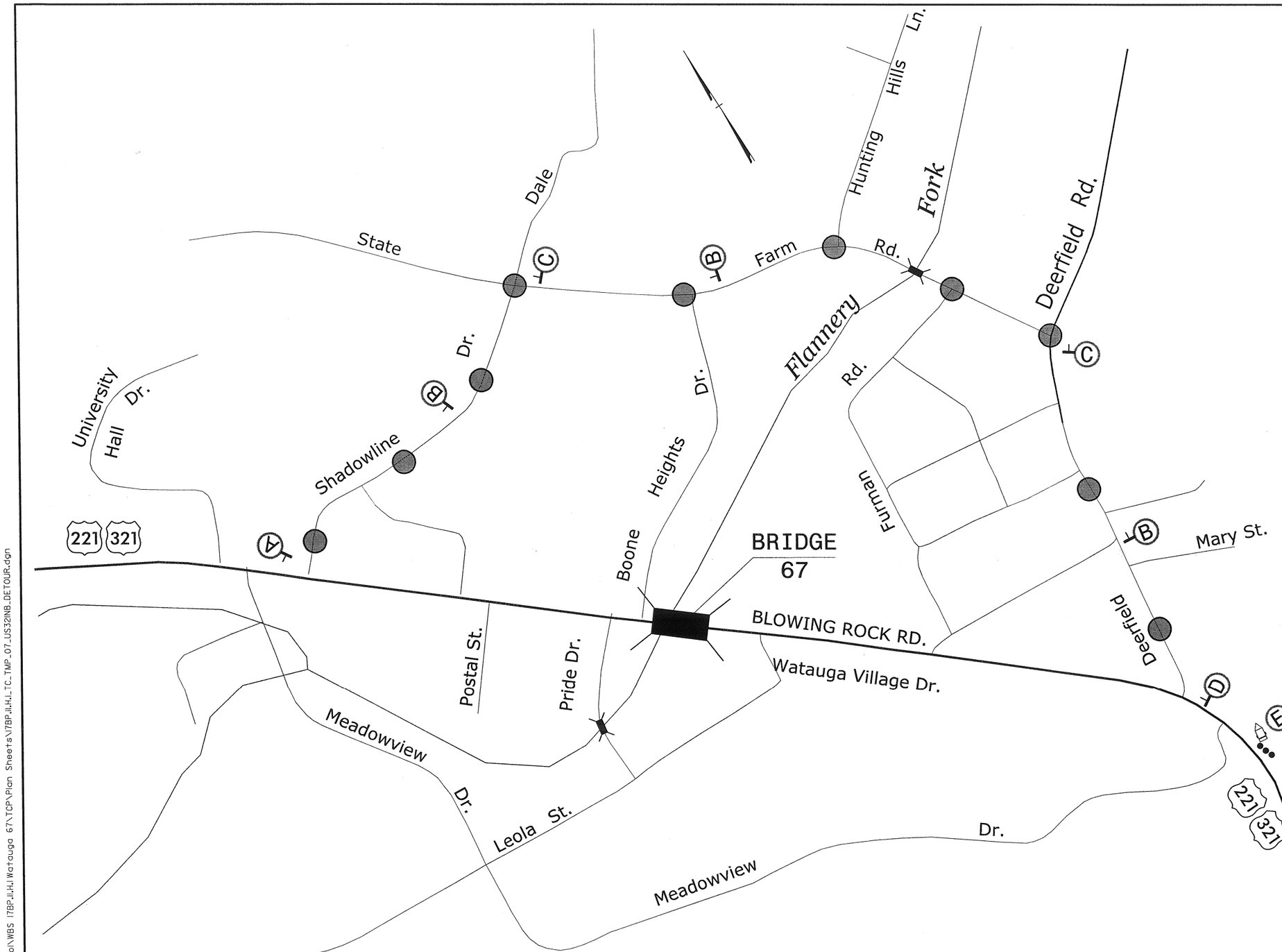

A

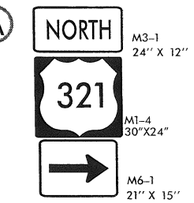

B

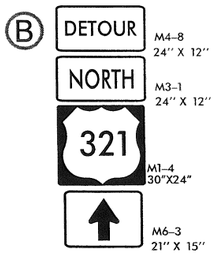

C

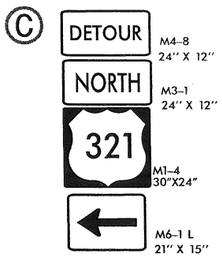

D

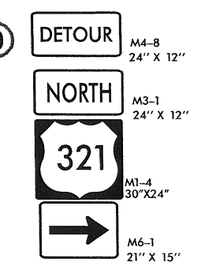

E

MESSAGE NO. 1	MESSAGE NO. 2
TRAFFIC STOPPED AHEAD	ALT RTE NEXT RIGHT
CHANGEABLE MESSAGE SIGN	

Stantec

Stantec Consulting Services Inc.
801 Jones Franklin Road
Suite 300
Raleigh, NC 27606
Tel. (919) 851-6866
Fax. (919) 851-7024
www.stantec.com
License No. F-0672

APPROVED: _____ DATE: _____

SEAL

NORTH CAROLINA PROFESSIONAL SEAL 29149 ENGINEER BETTY L. WATSON

11/1/11

DIVISION OF HIGHWAYS
STATE OF NORTH CAROLINA
DEPARTMENT OF TRANSPORTATION
WORK ZONE TRAFFIC CONTROL

US 321 NORTH
DETOUR ROUTE

10/28/2011
U:\Traffic\TrafficControl\WBS 17BP.11.H.1 Watauga 67\TCP\Plan Sheets\17BP.11.H.1_TC_TMP_07_US321NB_DETOUR.dgn
gkarageorge

PROJ. REFERENCE NO.	SHEET NO.
17BP.11.H.1	TMP-8

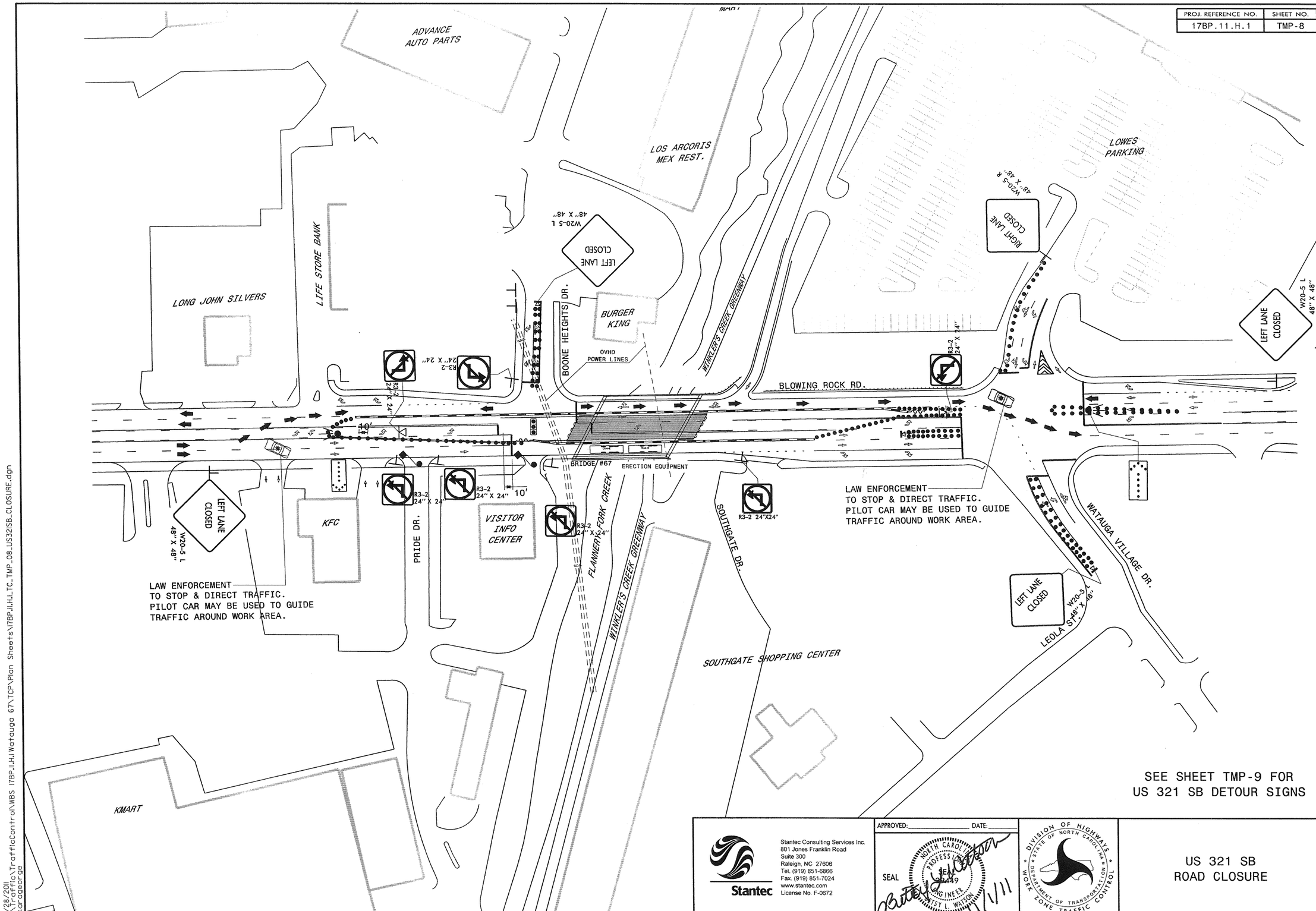

SEE SHEET TMP-9 FOR
US 321 SB DETOUR SIGNS

Stantec
Stantec Consulting Services Inc.
801 Jones Franklin Road
Suite 300
Raleigh, NC 27606
Tel. (919) 851-6866
Fax. (919) 851-7024
www.stantec.com
License No. F-0672

APPROVED: _____ DATE: _____

SEAL

NORTH CAROLINA PROFESSIONAL SEAL 029429 ENGINEER BETSY L. WATSON

11/1/11

DIVISION OF HIGHWAYS · STATE OF NORTH CAROLINA · DEPARTMENT OF TRANSPORTATION · WORK ZONE TRAFFIC CONTROL

US 321 SB
ROAD CLOSURE

10/28/2011
U:\Traffic\TrafficControl\WBS 17BP.11.H.1 Watauga 67\TCP\Plan Sheets\17BP.11.H.1_TC_TMP_08_US321SB_CLOSURE.dgn
gkcargeorge

PROJ. REFERENCE NO.	SHEET NO.
17BP.11.H.1	TMP-9

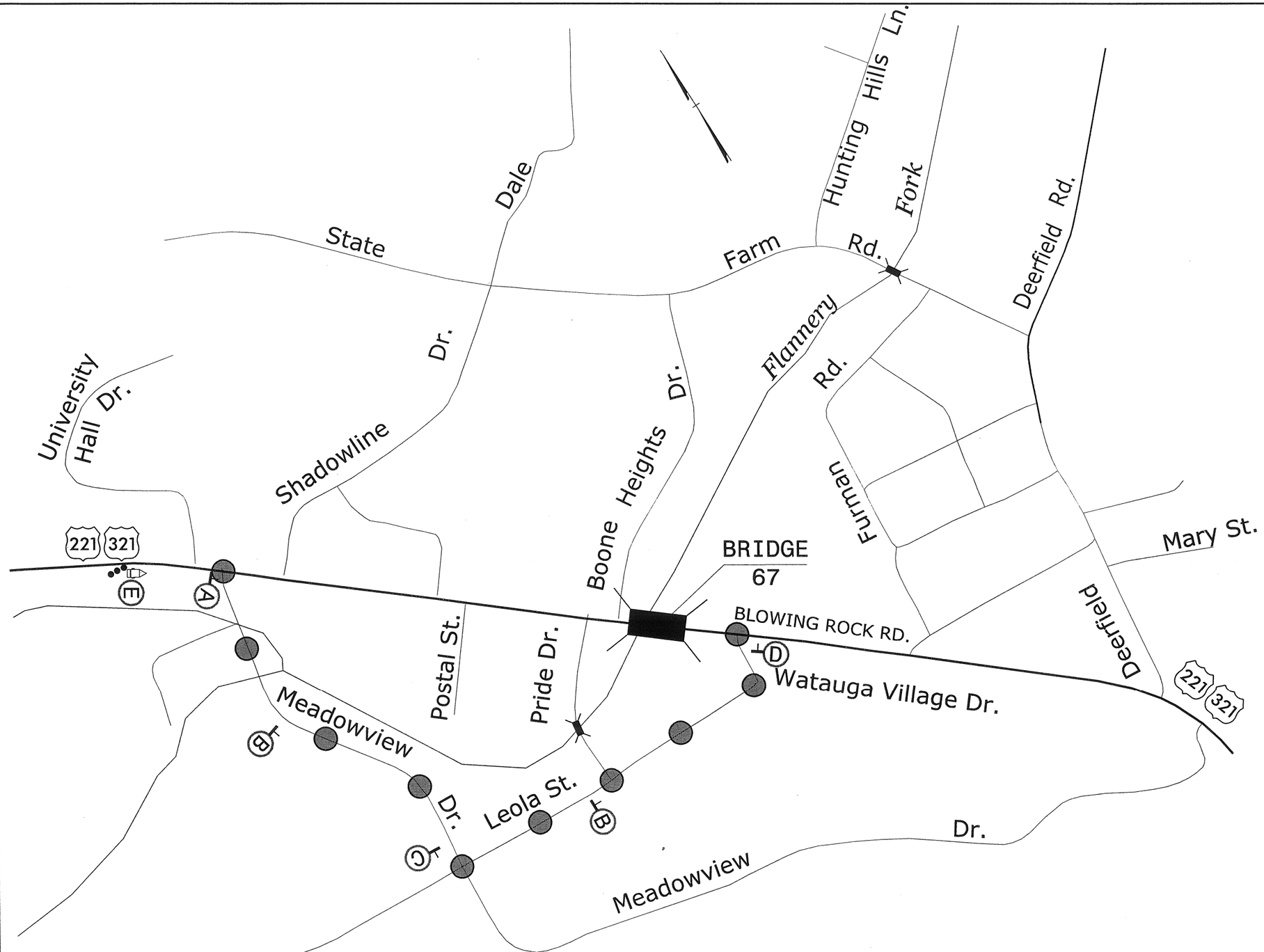

A

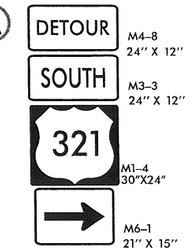

B

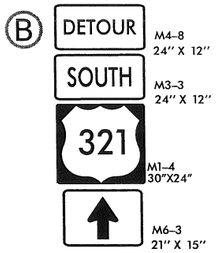

C

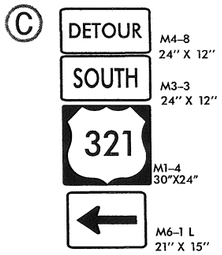

D

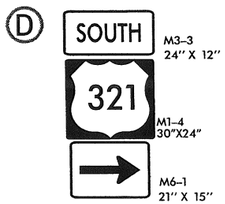

E

MESSAGE NO. 1	MESSAGE NO. 2
TRAFFIC STOPPED AHEAD	ALT RTE NEXT RIGHT
CHANGEABLE MESSAGE SIGN	

Stantec

Stantec Consulting Services Inc.
801 Jones Franklin Road
Suite 300
Raleigh, NC 27606
Tel. (919) 851-6866
Fax. (919) 851-7024
www.stantec.com
License No. F-0672

APPROVED: _____ DATE: _____

SEAL

NORTH CAROLINA PROFESSIONAL ENGINEER SEAL 29449 BETSY L. WATSON

11/1/11

DIVISION OF HIGHWAYS
STATE OF NORTH CAROLINA
DEPARTMENT OF TRANSPORTATION
WORK ZONE TRAFFIC CONTROL

US 321 SOUTH
DETOUR ROUTE

10/28/2011
U:\Traffic\TrafficControl\WBS 17BP.11.H.1 Watauga 67\TCP\Plan Sheets\17BP.11.H.1_TC_TMP_09_US321SB_DETOUR.dgn
gkarrageorge