CONTRACT #D001137 PROJECT: B-4075

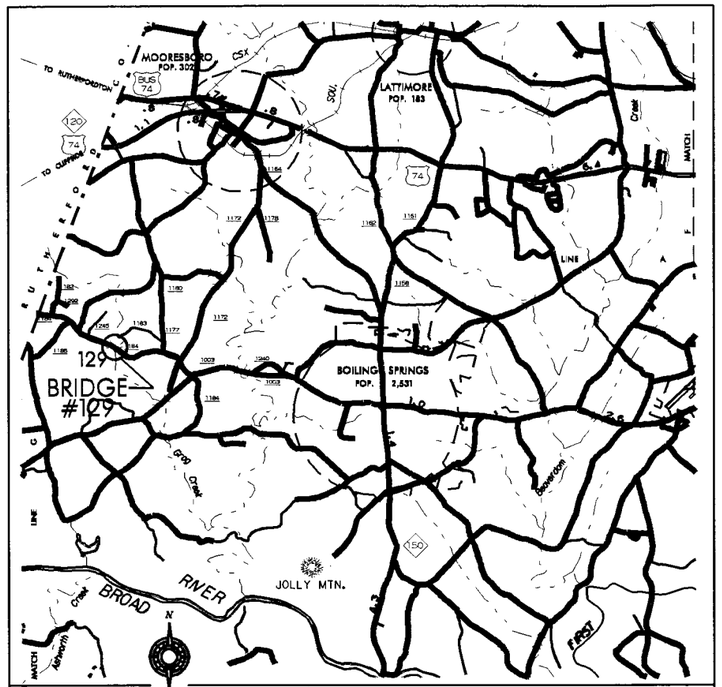

VICINITY MAP
(NOT TO SCALE)

STATE OF NORTH CAROLINA
DIVISION OF HIGHWAYS

CLEVELAND COUNTY

STATE	STATE PROJECT REFERENCE NO.	
N.C.	B-4075	TITLE
STATE PROJECT NO.	F.A. PROJ. NO.	DESCRIPTION
33437.1.1		P.E.
33437.2.1		R/W
33437.3.1		CONSTR.

LOCATION: SR 1184 BRIDGE NO. 129 OVER GROG CREEK

TYPE OF WORK: BRIDGE REPLACEMENT WITH PRE-STRESSED CONCRETE CORED SLABS SUPERSTRUCTURE ON STEEL PILE END BENTS AND ROADWAY APPROACHES

NC GRID NAD 83

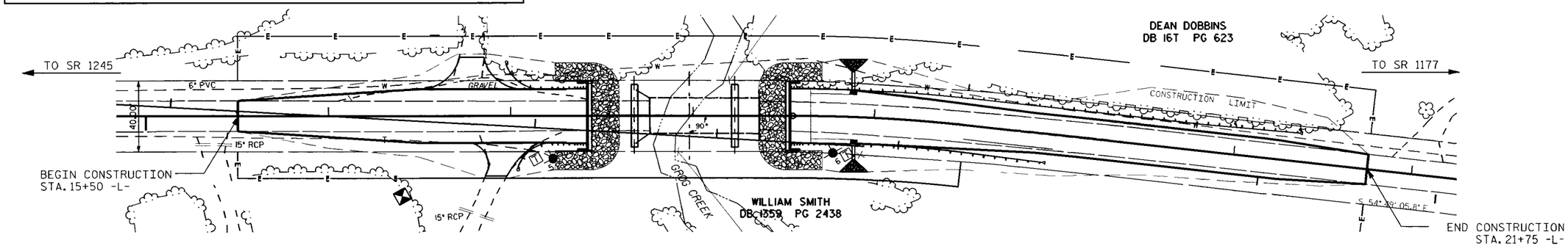

STATE OF NORTH CAROLINA DEPARTMENT OF TRANSPORTATION

DESIGN DATA

ADT 2009 = 610

ADT 2025 = 1380

PROJECT LENGTH

LENGTH ROADWAY TIP PROJECT = 0.087 MILE

LENGTH STRUCTURE TIP PROJECT = 0.021 MILE

TOTAL LENGTH TIP PROJECT = 0.118 MILE

Prepared In the Office of:

BRIDGE MANAGEMENT UNIT

NORTH CAROLINA DEPARTMENT OF TRANSPORTATION

2006 STANDARD SPECIFICATIONS

LETTING DATE: 11-19-2011

DAN HOLDERMAN, PE
STATE BRIDGE MANAGEMENT ENGINEER

NCDOT CONTACT: MIKE SUMMERS
BRIDGE MANAGEMENT PROJECT MANAGER

NORTH CAROLINA PROFESSIONAL SEAL 20208 ENGINEER ERIC P. NELSON, JR.
10/19/11

R. ERIC NELSON, PE
DESIGN ENGINEER

B-4075

CLEVELAND

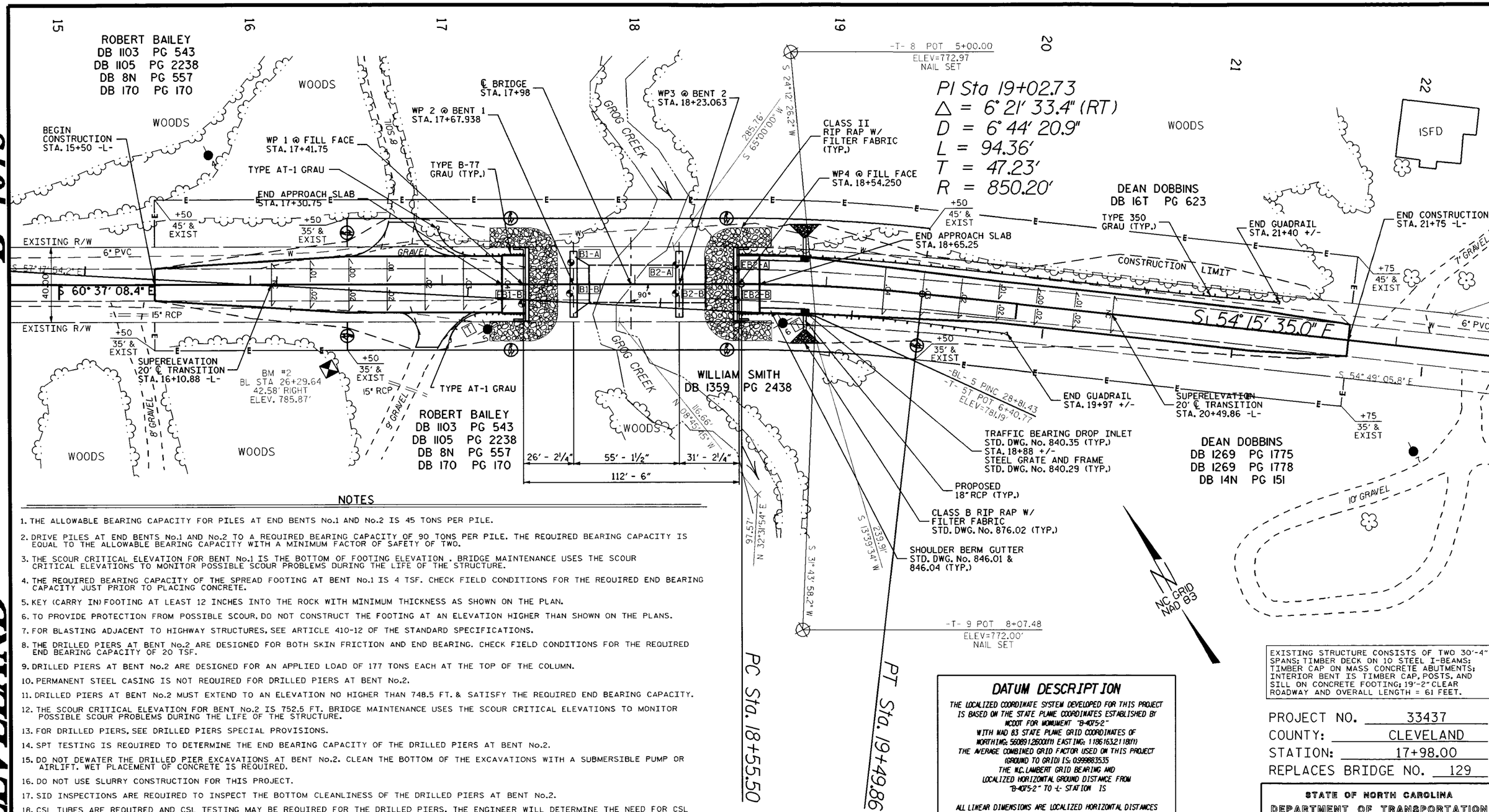

NOTES

1. THE ALLOWABLE BEARING CAPACITY FOR PILES AT END BENTS No.1 AND No.2 IS 45 TONS PER PILE.
2. DRIVE PILES AT END BENTS No.1 AND No.2 TO A REQUIRED BEARING CAPACITY OF 90 TONS PER PILE. THE REQUIRED BEARING CAPACITY IS EQUAL TO THE ALLOWABLE BEARING CAPACITY WITH A MINIMUM FACTOR OF SAFETY OF TWO.
3. THE SCOUR CRITICAL ELEVATION FOR BENT No.1 IS THE BOTTOM OF FOOTING ELEVATION . BRIDGE MAINTENANCE USES THE SCOUR CRITICAL ELEVATIONS TO MONITOR POSSIBLE SCOUR PROBLEMS DURING THE LIFE OF THE STRUCTURE.
4. THE REQUIRED BEARING CAPACITY OF THE SPREAD FOOTING AT BENT No.1 IS 4 TSF. CHECK FIELD CONDITIONS FOR THE REQUIRED END BEARING CAPACITY JUST PRIOR TO PLACING CONCRETE.
5. KEY (CARRY IN) FOOTING AT LEAST 12 INCHES INTO THE ROCK WITH MINIMUM THICKNESS AS SHOWN ON THE PLAN.
6. TO PROVIDE PROTECTION FROM POSSIBLE SCOUR, DO NOT CONSTRUCT THE FOOTING AT AN ELEVATION HIGHER THAN SHOWN ON THE PLANS.
7. FOR BLASTING ADJACENT TO HIGHWAY STRUCTURES, SEE ARTICLE 410-12 OF THE STANDARD SPECIFICATIONS.
8. THE DRILLED PIERS AT BENT No.2 ARE DESIGNED FOR BOTH SKIN FRICTION AND END BEARING. CHECK FIELD CONDITIONS FOR THE REQUIRED END BEARING CAPACITY OF 20 TSF.
9. DRILLED PIERS AT BENT No.2 ARE DESIGNED FOR AN APPLIED LOAD OF 177 TONS EACH AT THE TOP OF THE COLUMN.
10. PERMANENT STEEL CASING IS NOT REQUIRED FOR DRILLED PIERS AT BENT No.2.
11. DRILLED PIERS AT BENT No.2 MUST EXTEND TO AN ELEVATION NO HIGHER THAN 748.5 FT. & SATISFY THE REQUIRED END BEARING CAPACITY.
12. THE SCOUR CRITICAL ELEVATION FOR BENT No.2 IS 752.5 FT. BRIDGE MAINTENANCE USES THE SCOUR CRITICAL ELEVATIONS TO MONITOR POSSIBLE SCOUR PROBLEMS DURING THE LIFE OF THE STRUCTURE.
13. FOR DRILLED PIERS, SEE DRILLED PIERS SPECIAL PROVISIONS.
14. SPT TESTING IS REQUIRED TO DETERMINE THE END BEARING CAPACITY OF THE DRILLED PIERS AT BENT No.2.
15. DO NOT DEWATER THE DRILLED PIER EXCAVATIONS AT BENT No.2. CLEAN THE BOTTOM OF THE EXCAVATIONS WITH A SUBMERSIBLE PUMP OR AIRLIFT. WET PLACEMENT OF CONCRETE IS REQUIRED.
16. DO NOT USE SLURRY CONSTRUCTION FOR THIS PROJECT.
17. SID INSPECTIONS ARE REQUIRED TO INSPECT THE BOTTOM CLEANLINESS OF THE DRILLED PIERS AT BENT No.2.
18. CSL TUBES ARE REQUIRED AND CSL TESTING MAY BE REQUIRED FOR THE DRILLED PIERS. THE ENGINEER WILL DETERMINE THE NEED FOR CSL TESTING. SEE CROSS-HOLE SONIC LOGGING SPECIAL PROVISION.
19. ADT 640 FOR 2005. FUTURE ADT 1380 FOR YEAR 2025.
20. REMOVAL OF EXISTING BRIDGE SHALL BE PERFORMED SO AS NOT TO ALLOW DEBRIS TO FALL INTO THE WATER. THE CONTRACTOR SHALL REMOVE THIS STRUCTURE IN ACCORDANCE WITH ARTICLE 402-2 OF THE STANDARD SPECIFICATIONS.
21. THE QUANTITY OF RIP RAP TO BE PAID FOR WILL BE THE ACTUAL NUMBER OF TONS OF EACH CLASS OF RIP RAP WHICH HAS BEEN INCORPORATED INTO THE COMPLETED AND ACCEPTED WORK. THE RIP RAP WILL BE MEASURED BY BEING WEIGHED IN TRUCKS ON CERTIFIED WEIGHING DEVICES. THE QUANTITY OF RIP RAP WILL BE PAID FOR AT THE CONTRACT UNIT PRICE.

PLAIN RIP RAP CLASS II (2'-0" THICK)	
END BENT No.1	225 TONS
END BENT No.2	225 TONS
TOTAL	450 TONS

DRAWN BY: MTP/ STS DATE: 09/11
CHECKED BY: ZW/PDB DATE: 09/11

DENOTES GEO-TECH BORING HOLE LOCATION.

DATUM DESCRIPTION

THE LOCALIZED COORDINATE SYSTEM DEVELOPED FOR THIS PROJECT IS BASED ON THE STATE PLANE COORDINATES ESTABLISHED BY NCDOT FOR MONUMENT "B-4075-2" WITH NAD 83 STATE PLANE GRID COORDINATES OF NORTHING: 560891.2600(ft) EASTING: 1186163.2118(ft) THE AVERAGE COMBINED GRID FACTOR USED ON THIS PROJECT (GROUND TO GRID) IS: 0.999883535 THE N.C. LAMBERT GRID BEARING AND LOCALIZED HORIZONTAL GROUND DISTANCE FROM "B-4075-2" TO -L- STATION IS

ALL LINEAR DIMENSIONS ARE LOCALIZED HORIZONTAL DISTANCES
VERTICAL DATUM USED IS NAVD 88

GRAPHIC SCALE

50 25 0 50 100

EXISTING STRUCTURE CONSISTS OF TWO 30'-4" SPANS; TIMBER DECK ON 10 STEEL I-BEAMS; TIMBER CAP ON MASS CONCRETE ABUTMENTS; INTERIOR BENT IS TIMBER CAP, POSTS, AND SILL ON CONCRETE FOOTING; 19'-2" CLEAR ROADWAY AND OVERALL LENGTH = 61 FEET.

PROJECT NO. 33437
COUNTY: CLEVELAND
STATION: 17+98.00
REPLACES BRIDGE NO. 129

STATE OF NORTH CAROLINA
DEPARTMENT OF TRANSPORTATION
RALEIGH

BRIDGE #129 ON SR 1184
OVER
GROG CREEK

REVISIONS						SHEET NO.
NO.	BY	DATE	NO.	BY	DATE	1
1			3			TOTAL SHEETS
2			4			27

B-4075

CLEVELAND

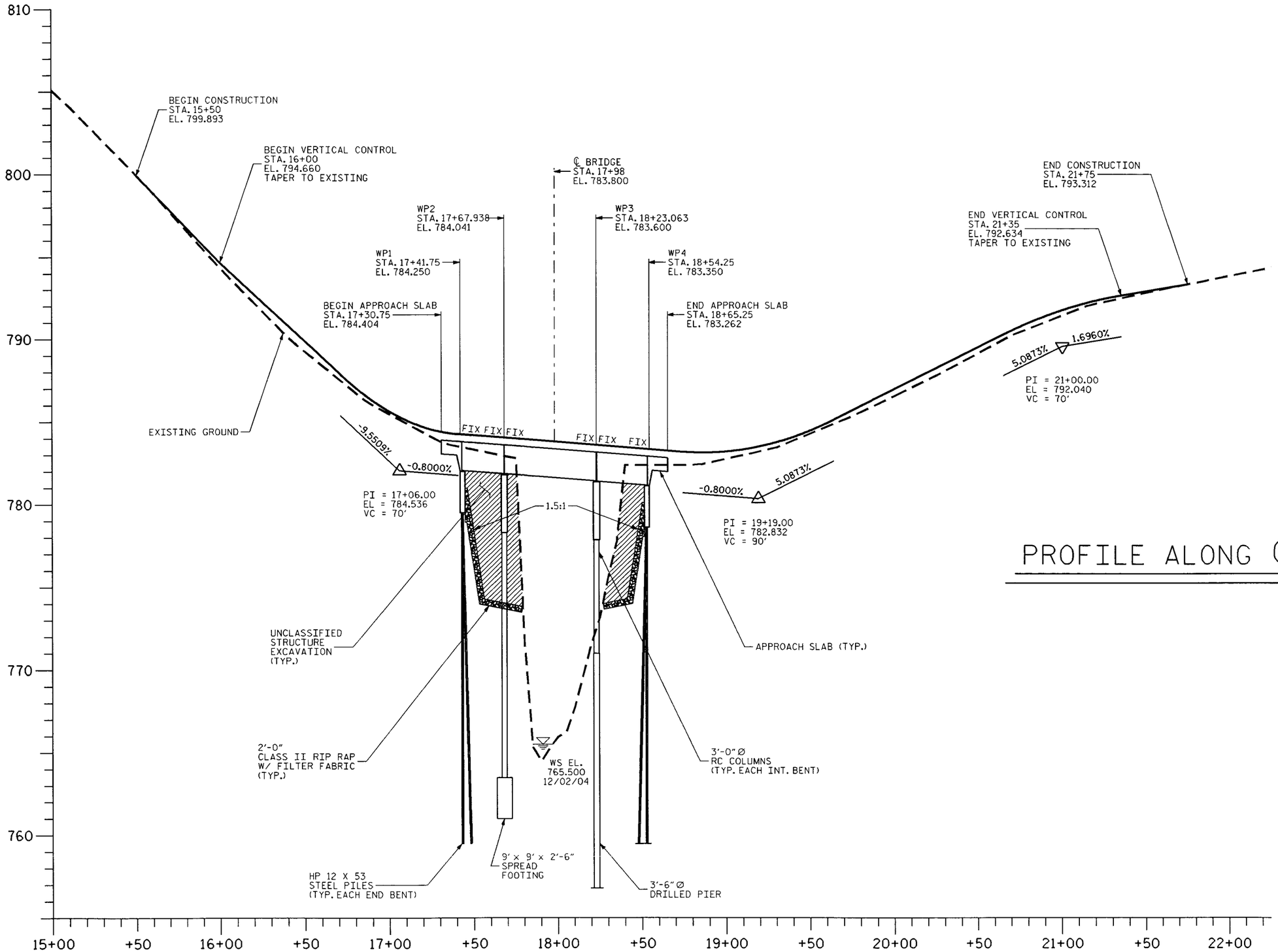

PROFILE ALONG ℄ SURVEY

PROJECT NO. 33437
COUNTY: CLEVELAND
STATION: 17+98.00
REPLACES BRIDGE NO. 129

STATE OF NORTH CAROLINA
DEPARTMENT OF TRANSPORTATION
RALEIGH

BRIDGE #129 ON SR 1184
OVER
GROG CREEK

REVISIONS						SHEET NO.
NO.	BY	DATE	NO.	BY	DATE	2
1			3			TOTAL SHEETS
2			4			27

DRAWN BY: MTP/ STS DATE: 09/11
CHECKED BY: ZW/PDB DATE: 09/11

ssandor AT BGMU240326 19-OCT-2011 10:47 S:\POC\Squad B\Current\Cleveland129,WBS33437\Roadway\B-4075_bmu_prop_pfl2.dgn

B-4075

CLEVELAND

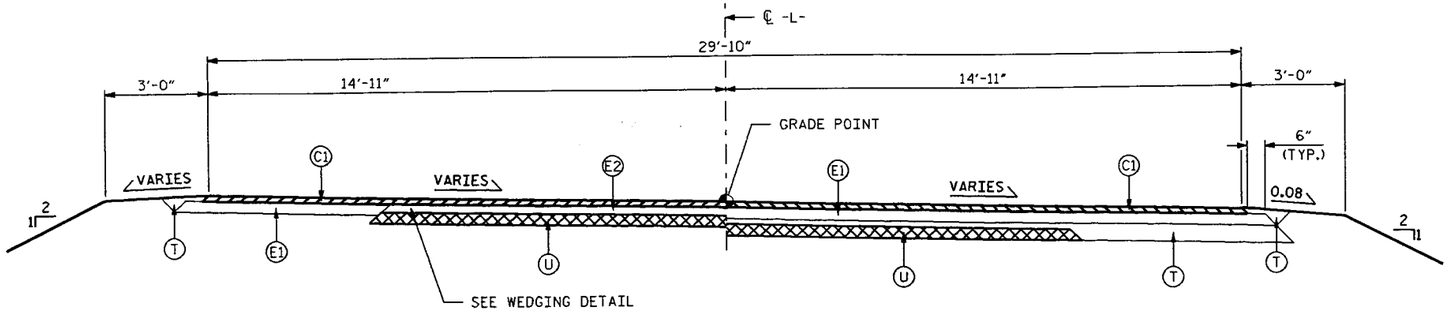

HALF SECTION
USE WHEN PROP. GRADE ELEVATIONS ARE LESS THAN 8" ABOVE THE EXISTING GRADE.

HALF SECTION
USE WHEN PROP. GRADE ELEVATIONS ARE 8" OR MORE ABOVE THE EXISTING GRADE.

STA. 16+50.00 TO STA. 17+30.75

TAPER TO EXISTING WIDTH STA. 15+50.00

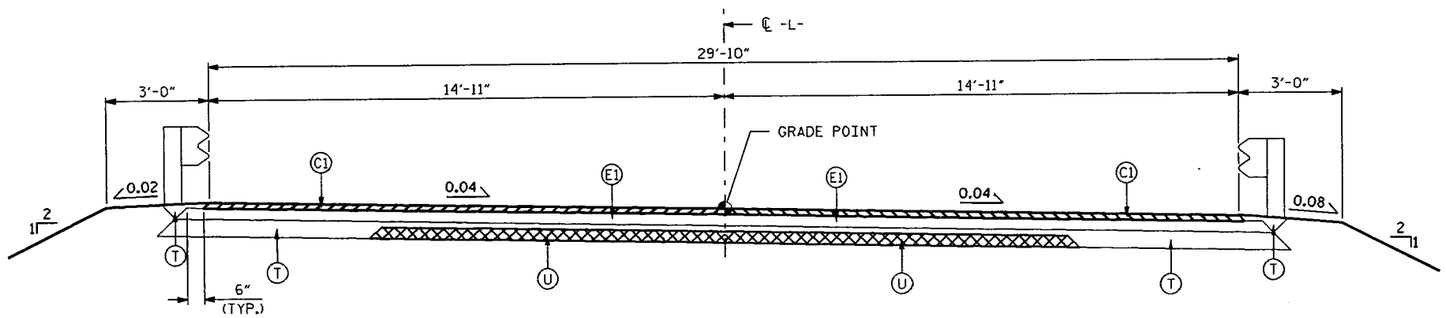

STA. 17+30.75 TO STA. 18+90.00

TRANSITION STA. 18+90.00 TO STA. 19+90.00

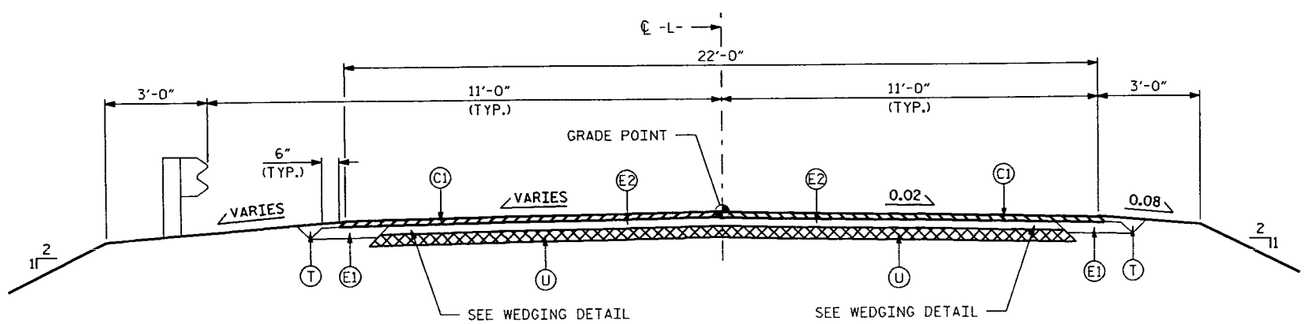

STA. 19+90.00 TO STA. 21+25.00

TAPER TO EXISTING WIDTH STA. 21+75.00

NOTES

1. PAVEMENT EDGE SLOPES ARE 1:1 UNLESS SHOWN OTHERWISE.
2. FOR METHOD OF SHOULDER CONSTRUCTION, SEE STD. DWG. 560.01.

C1	PROP. APPROX. 1½" MIN. ASPHALT CONCRETE SURFACE COURSE, TYPE SF9.5A, AT AN AVERAGE RATE OF 110 LBS. PER SQ. YD. PER 1" DEPTH.
C2	PROP. VARIABLE ASPHALT CONCRETE SURFACE COURSE, TYPE SF9.5A, AT AN AVERAGE RATE OF 110 LBS. PER SQ. YD. PER 1" DEPTH TO BE PLACED IN LAYERS NOT TO EXCEED 2" DEPTH.
E1	PROP. APPROX. 4" ASPHALT CONCRETE BASE COURSE, TYPE B25.0B, AT AN AVERAGE RATE OF 456 LBS. PER SQ. YD.
E2	PROP. VARIABLE DEPTH ASPHALT CONCRETE BASE COURSE, TYPE B25.0B, AT AN AVERAGE RATE OF 114 LBS. PER SQ. YD. PER 1" DEPTH. TO BE PLACED IN LAYERS NOT LESS THAN 3" IN DEPTH OR GREATER THAN 5½" IN DEPTH.
T	EARTH MATERIAL.
U	EXISTING PAVEMENT.

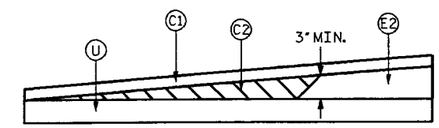

WEDGING DETAIL FOR RESURFACING

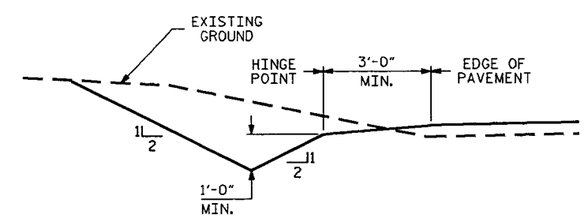

TYPICAL CUT SLOPE DETAIL

PROJECT NO. 33437
COUNTY: CLEVELAND
STATION: 17+98.00
REPLACES BRIDGE NO. 129

STATE OF NORTH CAROLINA
DEPARTMENT OF TRANSPORTATION
RALEIGH

TYPICAL ROADWAY SECTIONS

REVISIONS						SHEET NO.
NO.	BY	DATE	NO.	BY	DATE	3
1			3			TOTAL SHEETS
2			4			27

DRAWN BY: MTP/ STS DATE: 09/11
CHECKED BY: PDB DATE: 09/11

ssandor AT BGMU240326 29-SEP-2011 14:41 S:\PDC\Squad B\Current\Cleveland129.WBS33437\Roadway\B-4075_Dmu_TS.dgn

B-4075

CLEVELAND #129

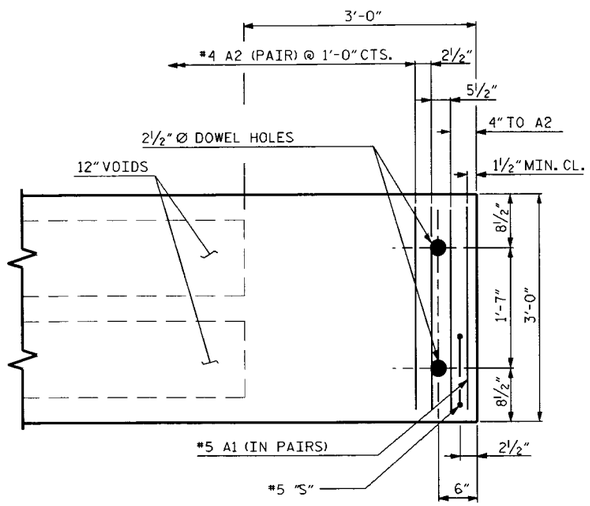

PART PLAN - SLAB SECTION

EXTERIOR SECTION SHOWN-INTERIOR SECTION SIMILAR EXCEPT OMIT "S" BARS.

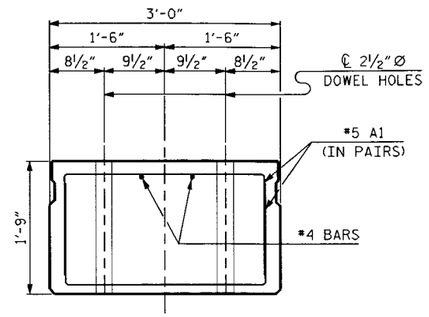

SLAB END ELEVATION

THE 2½" Ø DOWEL HOLES SHOULD BE FILLED WITH GROUT, SEE SPECIAL PROVISIONS (STRANDS LAYOUT NOT SHOWN)

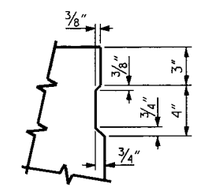

SHEAR KEY DETAIL

NOTE: OMIT SHEAR KEY ON OUTSIDE FACE OF EXTERIOR CORED SLAB

NOTES

1. ASSUMED LIVE LOAD = HS 20 OR ALTERNATE LOADING, EXCEPT THAT THE BEAMS HAVE BEEN DESIGNED FOR HS 25.
2. CONCRETE:
   25' & 30' SPANS:
   f'c = 5000 psi (MINIMUM COMPRESSIVE STRENGTH @ 28 DAYS)
   f'ci = 4000 psi (MINIMUM COMPRESSIVE STRENGTH @ TRANSFER OF STRESSING FORCE)
   55' SPAN:
   f'c = 6000 psi (MINIMUM COMPRESSIVE STRENGTH @ 28 DAYS)
   f'ci = 4500 psi (MINIMUM COMPRESSIVE STRENGTH @ TRANSFER OF STRESSING FORCE)
3. ALL PRESTRESS STRANDS SHALL MEET THE REQUIREMENTS OF ASTM A416.
4. ALL PRESTRESS STRANDS SHALL BE 7 WIRE, LOW RELAXATION, HIGH STRENGTH CABLES IN ACCORDANCE WITH THE SPECIFICATIONS. DETAILS (PER CABLE):

SIZE	TYPE	AREA	ULTIMATE STR.	APPLILED FORCE
0.6"Ø	HIGH STR.	0.217"	58,600#	43,950#

5. EXP. JT. MAT'L SHALL MEET THE REQUIREMENTS OF AASHTO SPECIFICATION M153 TYPE I, TYPE II, OR TYPE III.
6. STRUCTURAL STEEL ITEMS SHALL BE OF A GRADE CONFORMING TO EITHER ASTM A36 OR A373, EXCEPT HIGH STRENGTH BOLTS. HIGH STRENGTH BOLTS SHALL BE ASTM A325. ALL STRUCTURAL STEEL EXCEPT PILE CAP PLATES SHALL BE GALVANIZED AS PER THE SPECIFICATIONS.
7. ALL MATERIAL AND WORKMANSHIP SHALL COMPLY WITH THE APPLICABLE REQUIREMENTS OF THE STANDARD SPECIFICATIONS FOR ROADS AND STRUCTURES OF THE NC DEPARTMENT OF TRANSPORTATION DATED JULY 2006 AND THE SPECIAL PROVISIONS.
8. A POSITIVE HOLD DOWN SYSTEM MUST BE EMPLOYED TO PREVENT VOIDS FROM RISING.
9. SPIRAL WIRE REINFORCEMENT MAY BE USED IN LIEU OF DEFORMED BARS FOR STIRRUPS. MIN. W3.5 X 6" PITCH.
10. UNLESS OTHERWISE NOTED ON PLANS, ALL EXPOSED CORNERS ON STRUCTURES SHALL BE CAMFERED ¾".
11. EPOXY PROTECTIVE COATING SHALL BE APPLIED TO ENDS OF CORED SLABS.

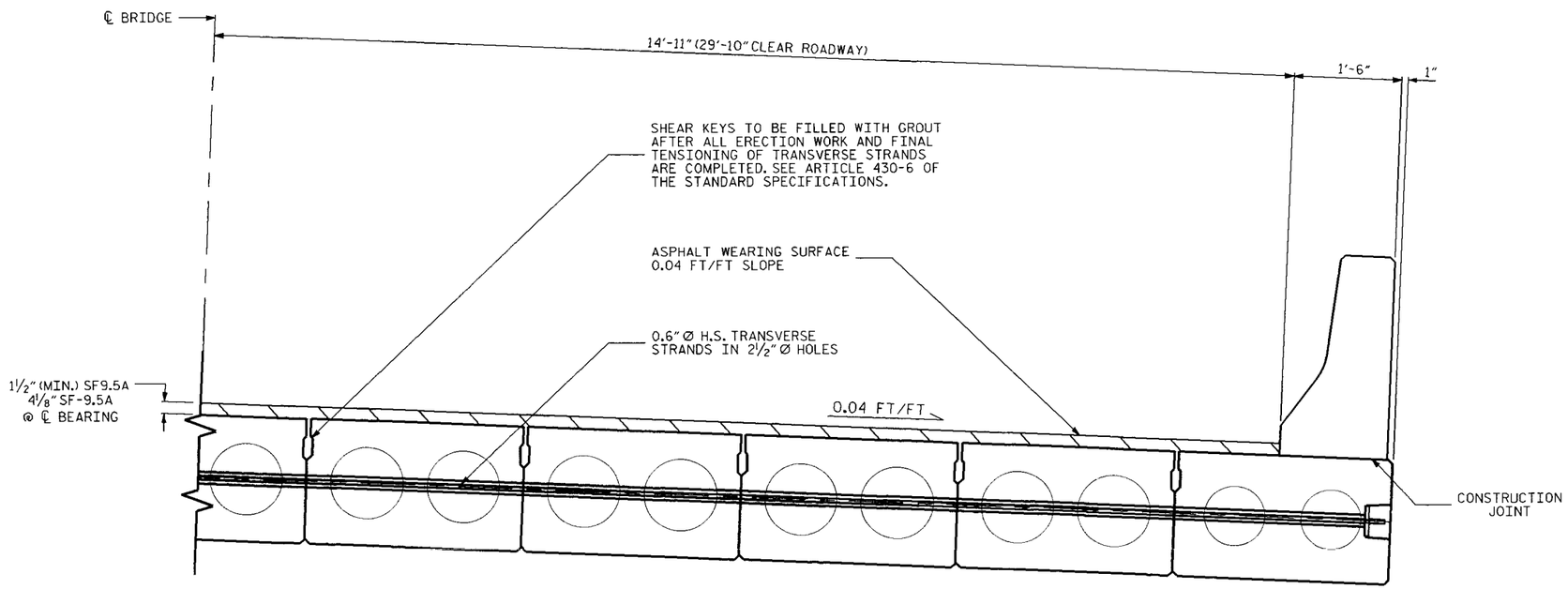

TYPICAL HALF SECTION

PROJECT NO. 33437
COUNTY: CLEVELAND
STATION: 17+98.00
REPLACES BRIDGE NO. 129

STATE OF NORTH CAROLINA
DEPARTMENT OF TRANSPORTATION
RALEIGH

CORED SLAB & SECTION DETAILS

REVISIONS						SHEET NO.
NO.	BY	DATE	NO.	BY	DATE	4
1			3			TOTAL SHEETS
2			4			27

DRAWN BY: MTP/ STS DATE: 09/11
CHECKED BY: PDB DATE: 09/11

B-4075

CLEVELAND

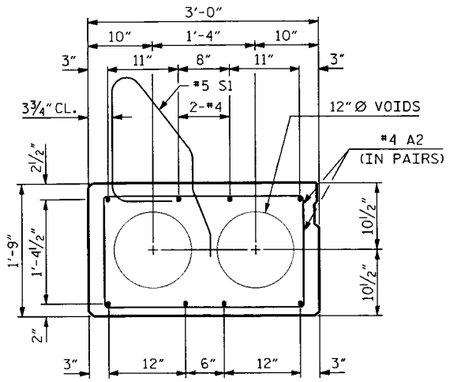

25' SPAN

6 - 0.6" Ø H.S. STRANDS
EXTERIOR SLAB SECTION
FINAL DEFLECTION 0.051" (UP)

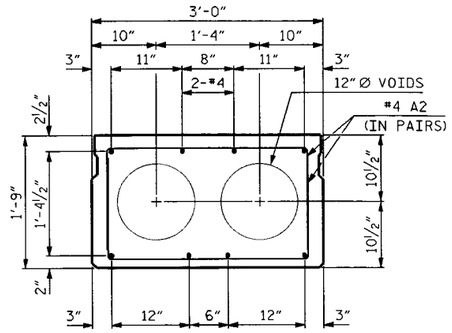

25' SPAN

6 - 0.6" Ø H.S. STRANDS
INTERIOR SLAB SECTION
FINAL DEFLECTION 0.051" (UP)

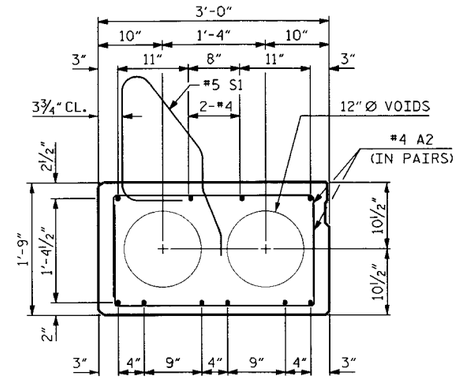

30' SPAN

8 - 0.6" Ø H.S. STRANDS
EXTERIOR SLAB SECTION
FINAL DEFLECTION 0.229" (UP)

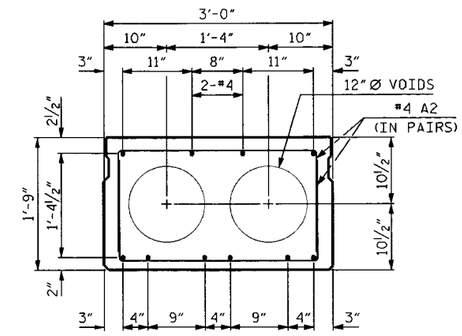

30' SPAN

8 - 0.6" Ø H.S. STRANDS
INTERIOR SLAB SECTION
FINAL DEFLECTION 0.229" (UP)

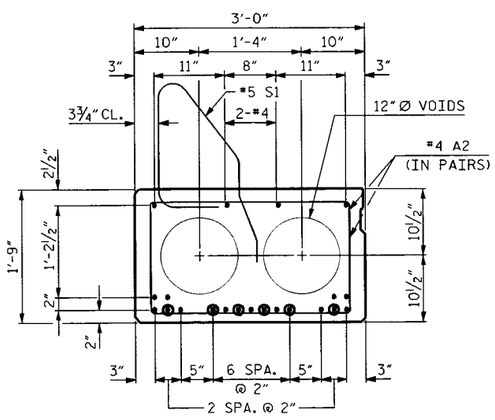

55' SPAN

19 - 0.6" Ø H.S. STRANDS
EXTERIOR SLAB SECTION
FINAL DEFLECTION 2.645" (UP)

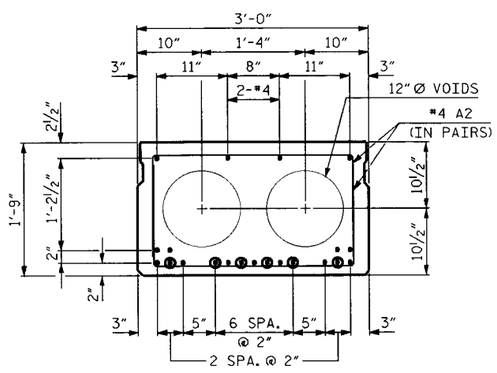

55' SPAN

19 - 0.6" Ø H.S. STRANDS
INTERIOR SLAB SECTION
FINAL DEFLECTION 2.645" (UP)

⊙ DENOTES SHEATHED STRAND
(SEE SHEATH CHART)

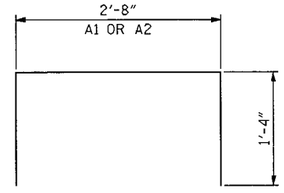

REINFORCING BAR TYPES

BAR DIMENSIONS ARE OUT TO OUT

S1 BAR SHALL BE EPOXY COATED,
SEE "CONCRETE BARRIER RAIL"
SHEET FOR DIMENSIONS

SHEATH CHART

SPAN LENGTH, EXT./INT. SLAB	NUMBER OF SHEATHED STRANDS	SHEATH LENGTH FROM SLAB END
55', EXT.	6	5'-5"
55', INT.	6	5'-5"

PROJECT NO. 33437
COUNTY: CLEVELAND
STATION: 17+98.00
REPLACES BRIDGE NO. 129

STATE OF NORTH CAROLINA
DEPARTMENT OF TRANSPORTATION
RALEIGH

CORED SLAB & SECTION DETAILS

REVISIONS						SHEET NO.
NO.	BY	DATE	NO.	BY	DATE	5
1			3			TOTAL SHEETS
2			4			27

DRAWN BY: MTP/ STS DATE: 09/11
CHECKED BY: PDB DATE: 09/11

B-4075

CLEVELAND

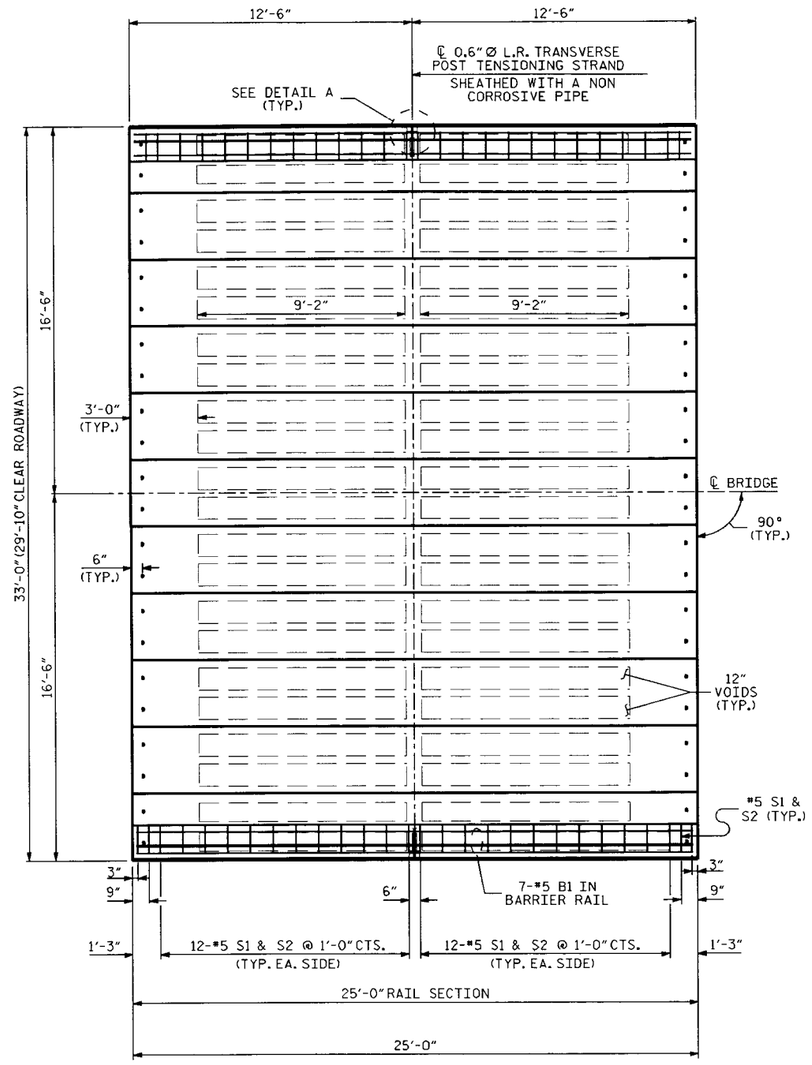

25' SPAN

SPAN A

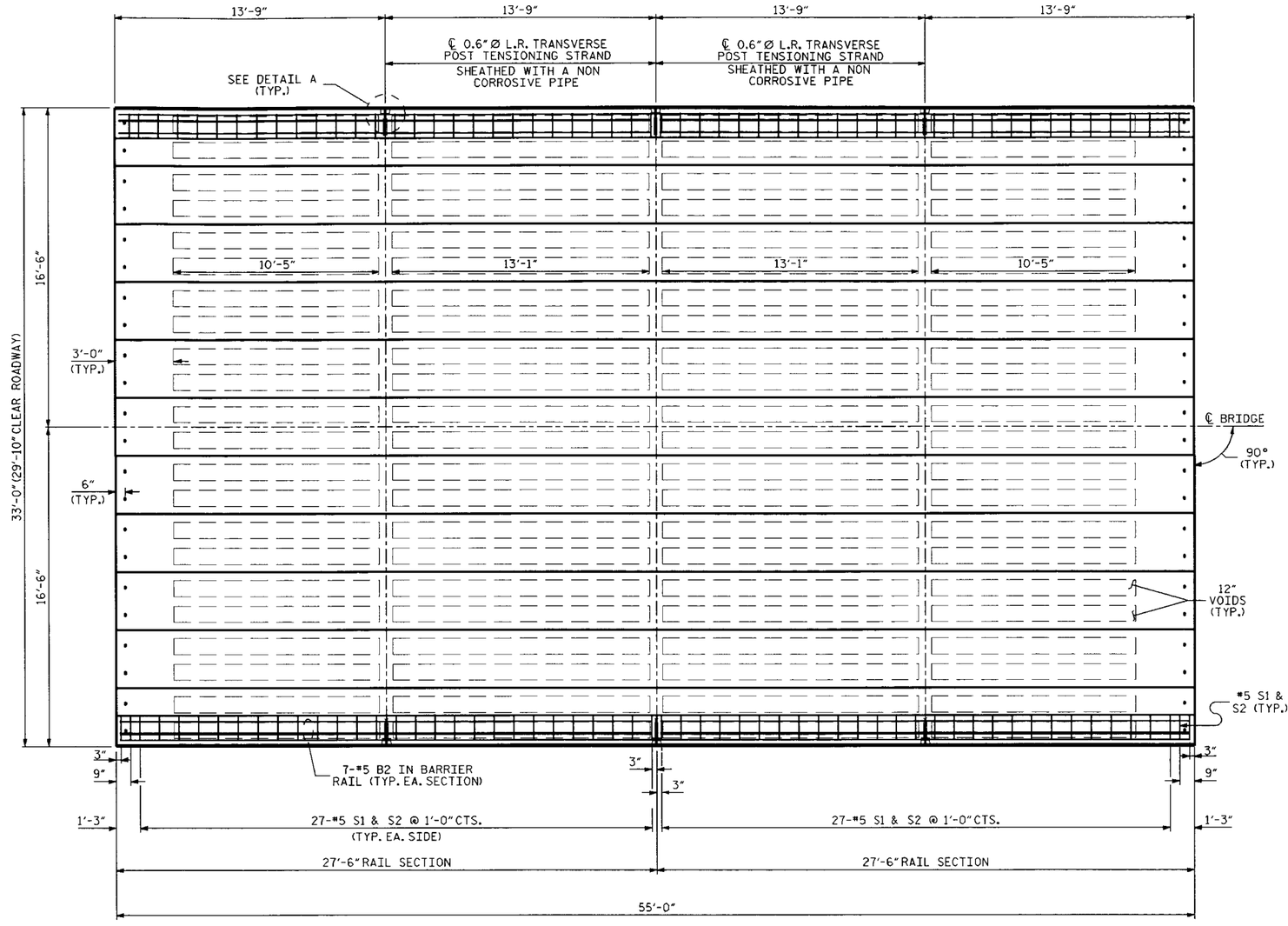

55' SPAN

SPAN B

PROJECT NO. 33437
COUNTY: CLEVELAND
STATION: 17+98.00
REPLACES BRIDGE NO. 129

STATE OF NORTH CAROLINA
DEPARTMENT OF TRANSPORTATION
RALEIGH

PLAN OF SPANS 90° SKEW

REVISIONS						SHEET NO.
NO.	BY	DATE	NO.	BY	DATE	6
1			3			TOTAL SHEETS
2			4			27

DRAWN BY: MTP/STS DATE: 09/11
CHECKED BY: RW/ PDB DATE: 09/11

B-4075

CLEVELAND

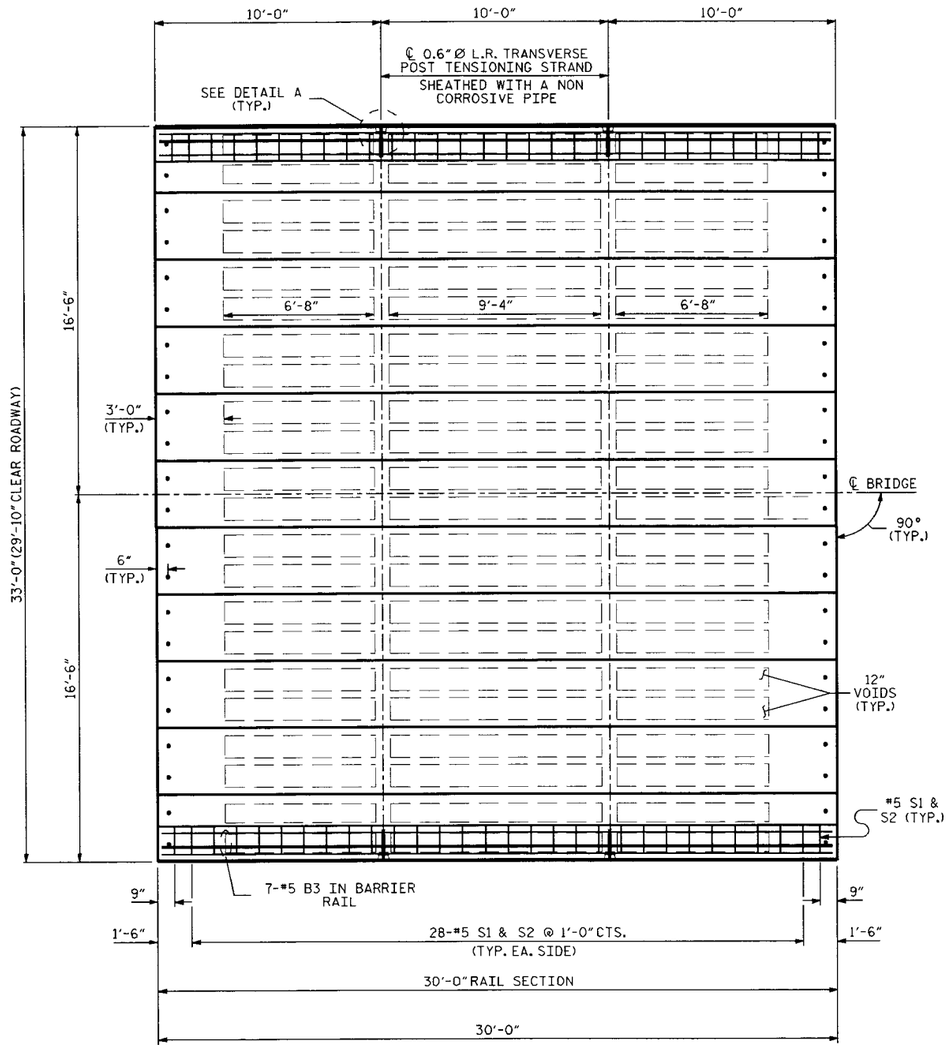

30' SPAN

SPAN C

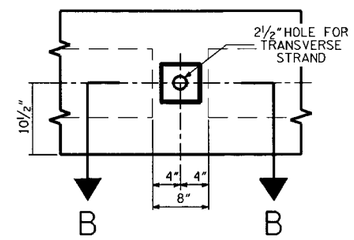

ELEVATION VIEW

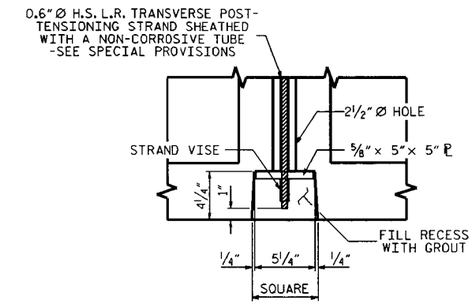

SECTION B-B

DETAIL -A-

NOT TO SCALE

PROJECT NO. 33437
COUNTY: CLEVELAND
STATION: 17+98.00
REPLACES BRIDGE NO. 129

STATE OF NORTH CAROLINA
DEPARTMENT OF TRANSPORTATION
RALEIGH

PLAN OF SPANS 90° SKEW

REVISIONS						SHEET NO.
NO.	BY	DATE	NO.	BY	DATE	7
1			3			TOTAL SHEETS
2			4			27

DRAWN BY: MTP/STS DATE: 09/11
CHECKED BY: RW/ PDB DATE: 09/11

B-4075

CLEVELAND

NOTES

1. ALL REINFORCING STEEL IN BARRIER RAILS SHALL BE EPOXY COATED.
2. THE BACKER ROD SHALL CONFORM TO THE REQUIREMENTS OF THE TYPE M BOND BREAKER. SEE SECTION 1028 OF THE STANDARD SPECIFICATIONS.
3. VERTICAL GROOVED CONTRACTION JOINTS, 1/2" IN DEPTH, SHALL BE TOOLED IN ALL EXPOSED FACES OF THE BARRIER RAIL, AND IN ACCORDANCE WITH ARTICLE 825-10(B) OF THE STANDARD SPECIFICATIONS. A VERTICAL CONTRACTION JOINT SHALL BE LOCATED AT EACH THIRD POINT BETWEEN BARRIER RAIL EXPANSION JOINTS. ONLY ONE CONTRACTION JOINT IS REQUIRED AT THE MIDPOINT OF BARRIER RAIL SEGMENTS LESS THAN 20 FEET IN LENGTH, AND NO CONTRACTION JOINTS ARE REQUIRED FOR THOSE SEGMENTS LESS THAN 10 FEET IN LENGTH.
4. CONCRETE CHAMFERS:
   UNLESS OTHERWISE NOTED ON THE PLANS, ALL EXPOSED CORNERS ON STRUCTURES SHALL BE CHAMFERED 3/4" WITH THE FOLLOWING EXCEPTIONS: TOP CORNERS OF CURBS MAY BE ROUNDED TO 1 1/2" RADIUS WHICH IS BUILT INTO CURB FORMS; CORNERS OF TRANSVERSE FLOOR EXPANSION JOINTS SHALL BE ROUNDED WITH A 1/4" FINISHING TOOL UNLESS OTHERWISE REQUIRED ON PLANS; AND CORNERS OF EXPANSION JOINTS IN THE ROADWAY FACES, AND TOPS OF CURBS AND SIDEWALKS SHALL BE ROUNDED TO A 1/4" RADIUS WITH A FINISHING STONE OR TOOL UNLESS OTHERWISE REQUIRED ON PLANS.
5. THE 2 1/2" Ø DOWEL HOLES AT EACH END OF THE SLAB SECTIONS SHALL BE FILLED WITH GROUT. SEE SPECIAL PROVISIONS.

FIXED END

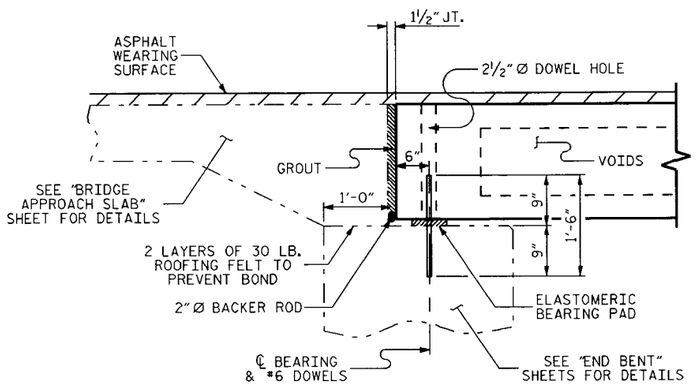

SECTION AT END BENT

FIXED END FIXED END

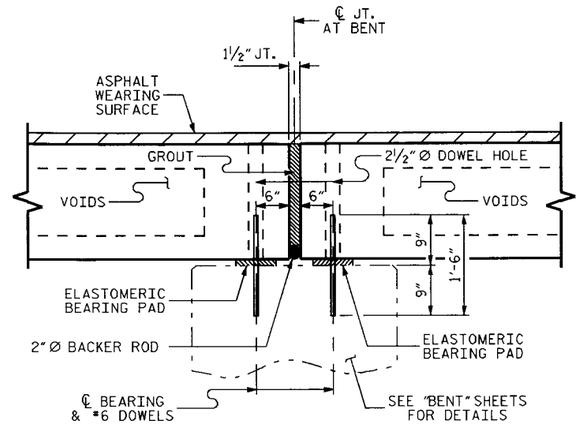

SECTION AT BENT

BAR TYPES

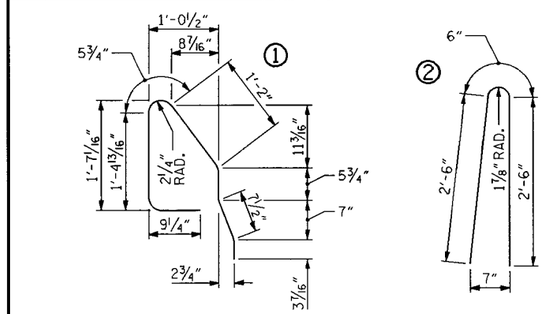

BILL OF MATERIAL FOR CONCRETE BARRIER RAIL

BAR	BARS PER SPAN			TOTAL NO.	SIZE	TYPE	LENGTH	WEIGHT
	SPAN A	SPAN B	SPAN C					
* B1	14			14	5	STR	24'-7"	359
* B2		28		28	5	STR	27'-1"	791
* B3			14	14	5	STR	29'-7"	622
* S1	52	112	60	224	5	1	5'-3"	1227
* S2	52	112	60	224	5	2	5'-6"	1285
* EPOXY COATED REINFORCING STEEL							LBS.	4088
CLASS AA CONCRETE							C.Y.	25.5

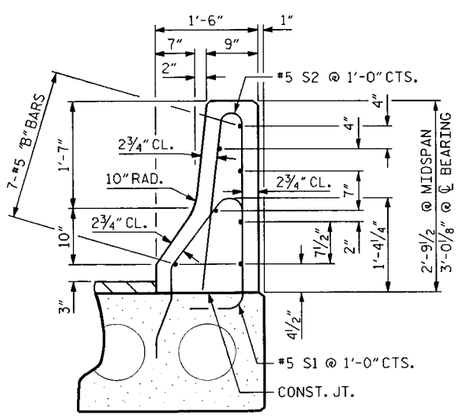

SECTION THRU RAIL

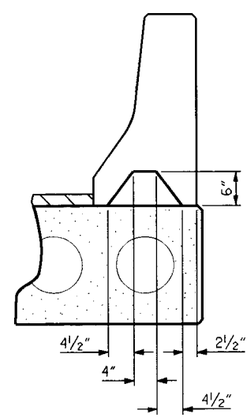

SECTION S-S

AT DAM IN OPEN JOINT (THIS IS TO BE USED ONLY WHEN SLIP FORM IS USED)

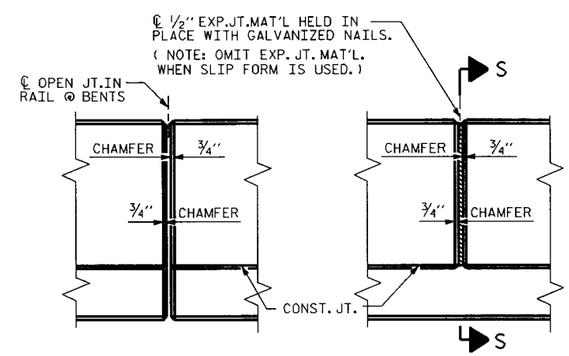

ELEVATION AT EXPANSION JOINTS

BARRIER RAIL DETAILS

PROJECT NO. 33437
COUNTY: CLEVELAND
STATION: 17+98.00
REPLACES BRIDGE NO. 129

STATE OF NORTH CAROLINA
DEPARTMENT OF TRANSPORTATION
RALEIGH

CONCRETE BARRIER RAIL

REVISIONS						SHEET NO.
NO.	BY	DATE	NO.	BY	DATE	8
1			3			TOTAL SHEETS
2			4			27

DRAWN BY: MTP/ STS DATE: 09/11
CHECKED BY: RW/ PB DATE: 09/11

B-4075

CLEVELAND

NOTES

1. STIRRUPS IN CAP MAY BE SHIFTED AS NECESSARY TO CLEAR DOWELS.
2. FOR SECTION A-A, WING, LATERAL GUIDE, AND PILE SPICE DETAILS, SEE SHEET 10.
3. ALIGN #5 S1 BARS VERTICALLY

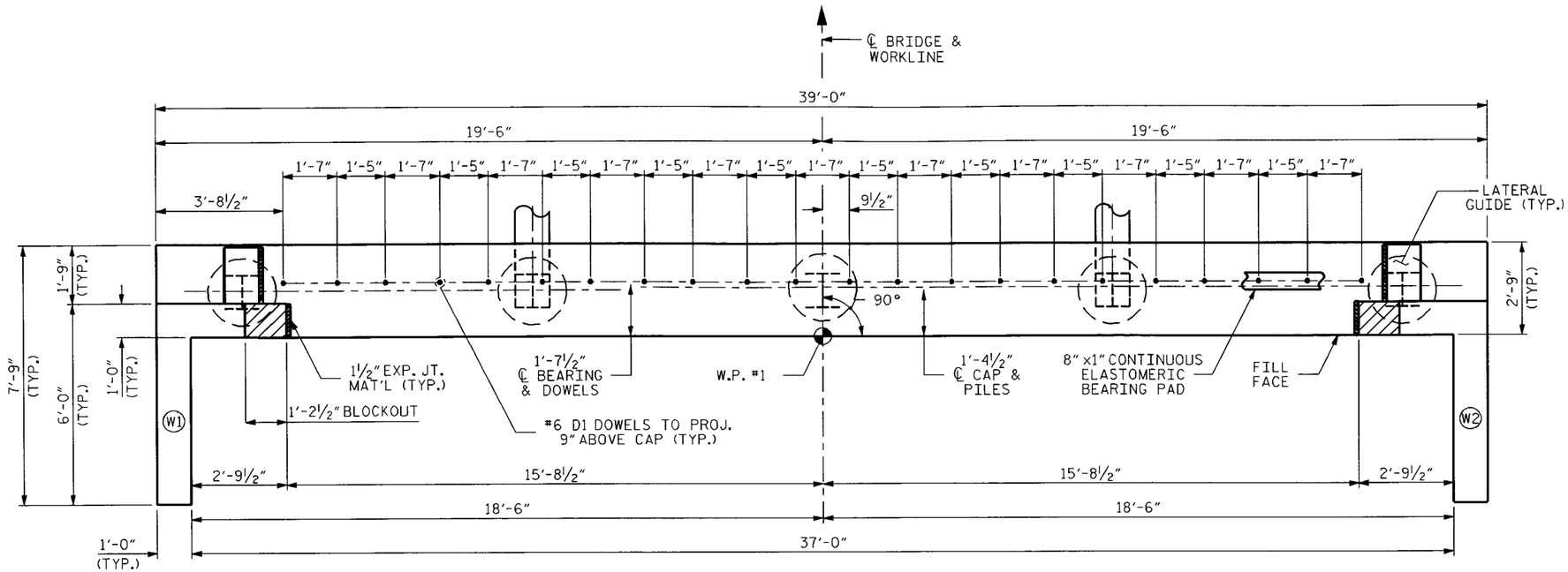

PLAN

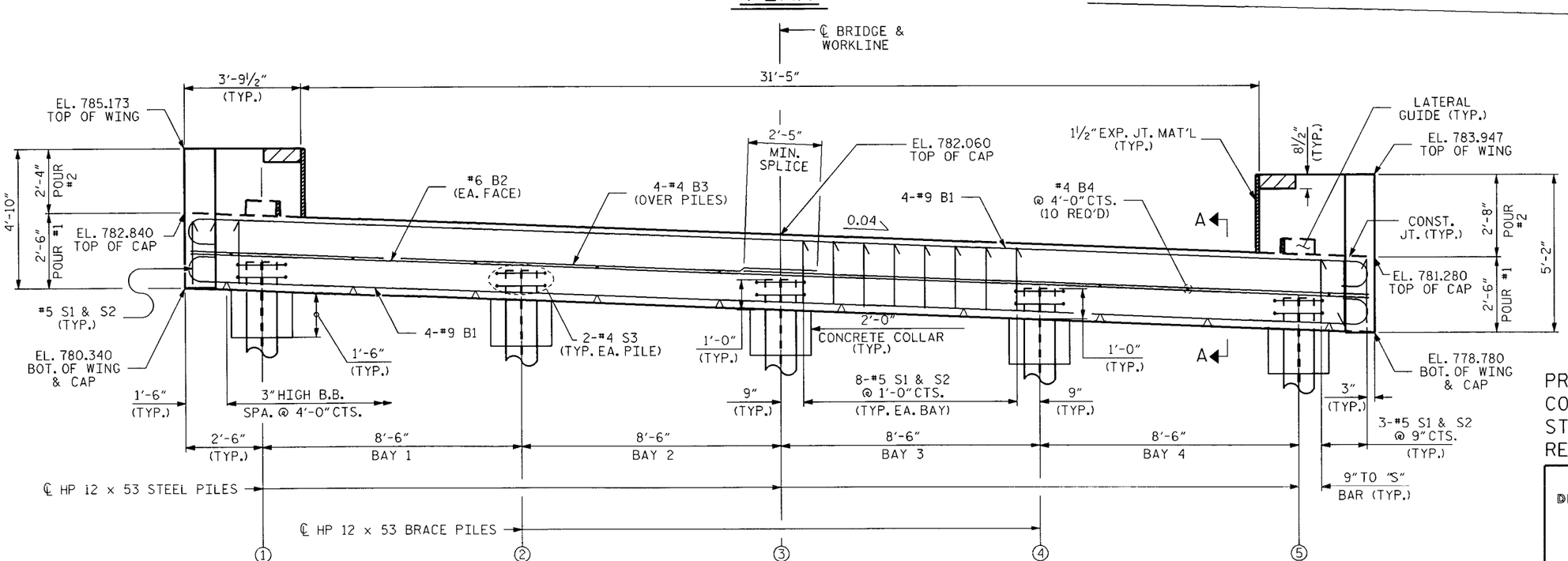

ELEVATION

TOP OF ℄ PILE ELEVATIONS

1	781.260
2	780.920
3	780.580
4	780.240
5	779.900

PROJECT NO. 33437
COUNTY: CLEVELAND
STATION: 17+98.00
REPLACES BRIDGE NO. 129

STATE OF NORTH CAROLINA
DEPARTMENT OF TRANSPORTATION
RALEIGH

SUBSTRUCTURE

END BENT NO. 1

REVISIONS						SHEET NO.
NO.	BY	DATE	NO.	BY	DATE	9
1			3			TOTAL SHEETS
2			4			27

DRAWN BY: MTP/STS DATE: 09/11
CHECKED BY: RW/PDB DATE: 09/11

B-4075

CLEVELAND

NOTE

V1 & V2 BAR LENGTH MAY NEED TO BE ADJUSTED ABOVE THE TOP OF PILES, TO MAINTAIN 2" COVER AT TOP OF WING.

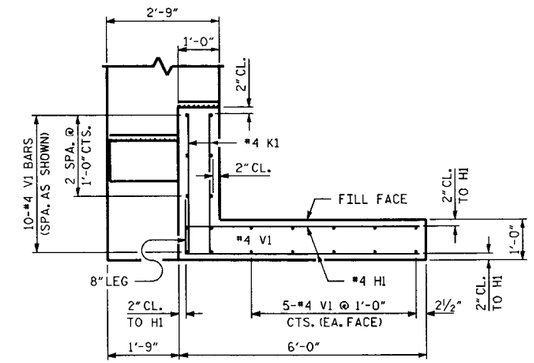

PLAN OF WING (W1)

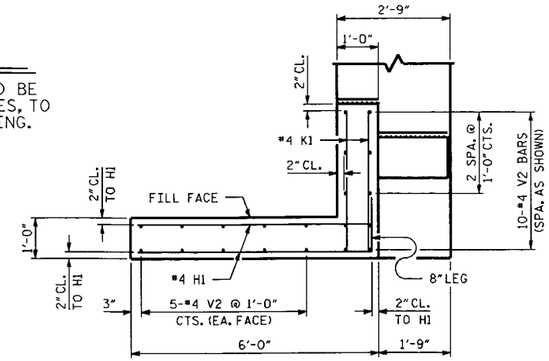

PLAN OF WING (W2)

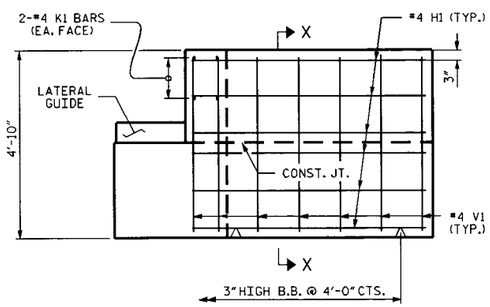

ELEVATION OF WING (W1)

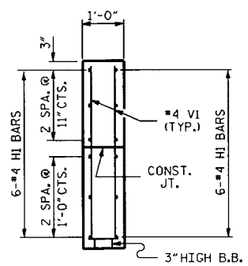

SECTION X-X

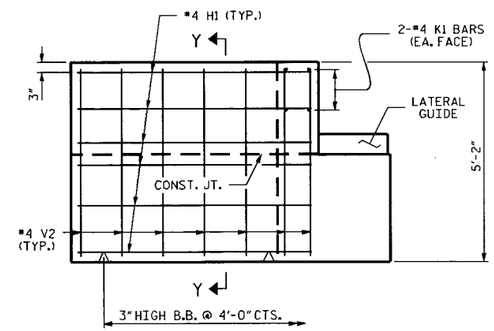

ELEVATION OF WING (W2)

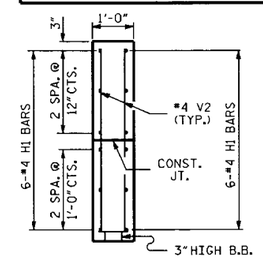

SECTION Y-Y

BAR TYPES

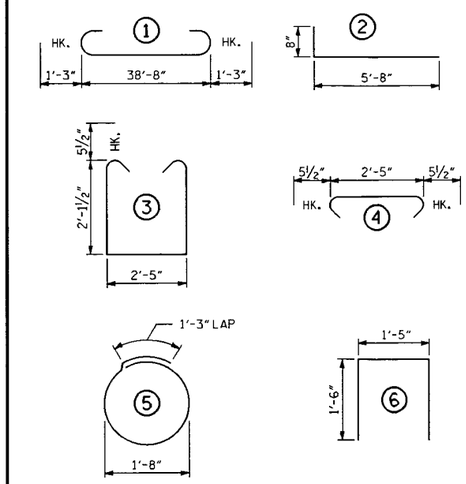

ALL BAR DIMENSIONS ARE OUT TO OUT

BILL OF MATERIAL

END BENT 1

BAR	NO.	SIZE	TYPE	LENGTH	WEIGHT
B1	8	9	1	41'-2"	1120
B2	2	6	STR	38'-8"	116
B3	8	4	STR	20'-7"	110
B4	10	4	STR	2'-5"	16
D1	22	6	STR	1'-6"	50
H1	24	4	2	6'-4"	102
K1	8	4	STR	3'-5"	18
S1	38	5	3	7'-7"	301
S2	38	5	4	3'-4"	132
S3	10	4	5	6'-6"	43
U1	4	5	6	4'-5"	18
V1	20	4	STR	4'-6"	60
V2	20	4	STR	4'-10"	66

REINFORCING STEEL		= 2152 LBS
CLASS A CONCRETE:		
POUR 1:	CAP, COLLARS & LOWER PART OF WINGS	12.0 C.Y.
POUR 2:	UPPER PART OF WINGS	1.6 C.Y.
POUR 3:	LATERAL GUIDES	0.1 C.Y.
	TOTAL	13.7 C.Y.

5 HP 12 X 53 STEEL PILES = 100 LN. FT.

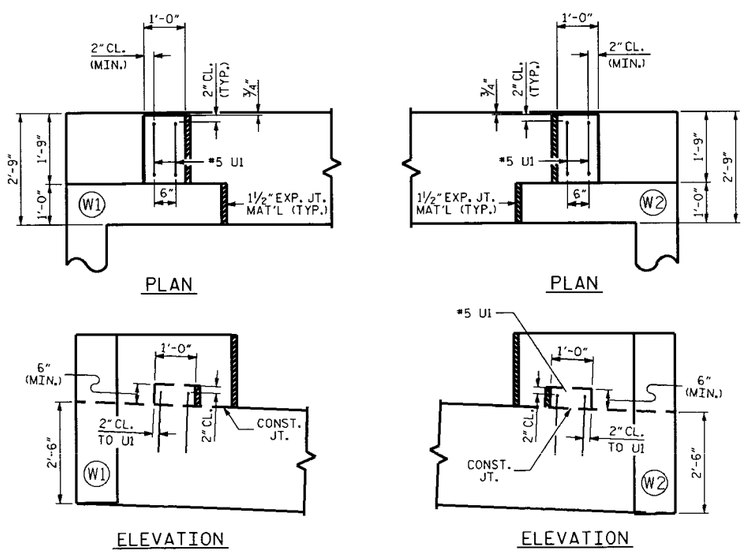

LATERAL GUIDE DETAILS

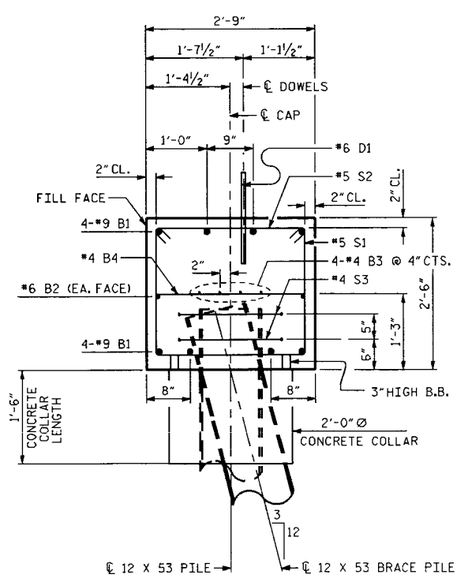

SECTION A-A

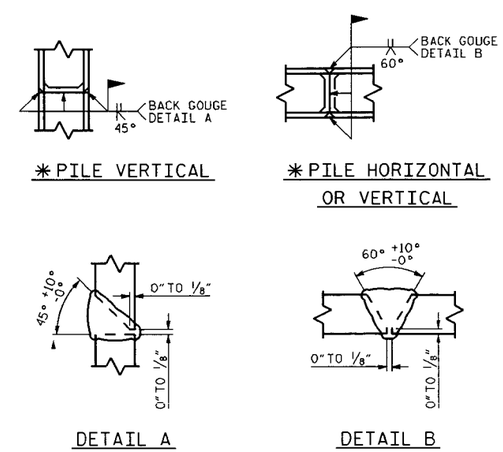

✱ PILE VERTICAL

✱ PILE HORIZONTAL OR VERTICAL

DETAIL A

DETAIL B

✱ POSITION OF PILE DURING WELDING

PILE SPLICE DETAILS

PROJECT NO. 33437
COUNTY: CLEVELAND
STATION: 17+98.00
REPLACES BRIDGE NO. 129

STATE OF NORTH CAROLINA
DEPARTMENT OF TRANSPORTATION
RALEIGH

SUBSTRUCTURE

END BENT NO. 1

REVISIONS						SHEET NO.
NO.	BY	DATE	NO.	BY	DATE	10
1			3			TOTAL SHEETS
2			4			27

DRAWN BY: MTP/STS DATE: 09/11
CHECKED BY: RW/PDB DATE: 09/11

B-4075

CLEVELAND

NOTES

1. STIRRUPS IN CAP MAY BE SHIFTED AS NECESSARY TO CLEAR DOWELS.
2. HOOKS ON "V" BARS MAY BE TURNED AS NECESSARY FOR PLACING REINFORCING STEEL.
3. FOR SPREAD FOOTINGS, SEE SPECIAL PROVISIONS FOR SUBSTRUCTURE SCOUR PROTECTION, SHEET 12.
4. THE CONTRACTOR'S ATTENTION IS CALLED TO THE FACT THAT THE "M1" LONGITUDINAL REINFORCEMENT FOR THE DRILLED PIERS IS DETAILED WITH AT LEAST 3 FEET OF EXTRA LENGTH WHICH WILL NEED TO BE CUT OFF IF DRILLED PIER IS NOT EXTENDED BELOW THE BOTTOM OF DRILLED PIER PLAN ELEVATION.

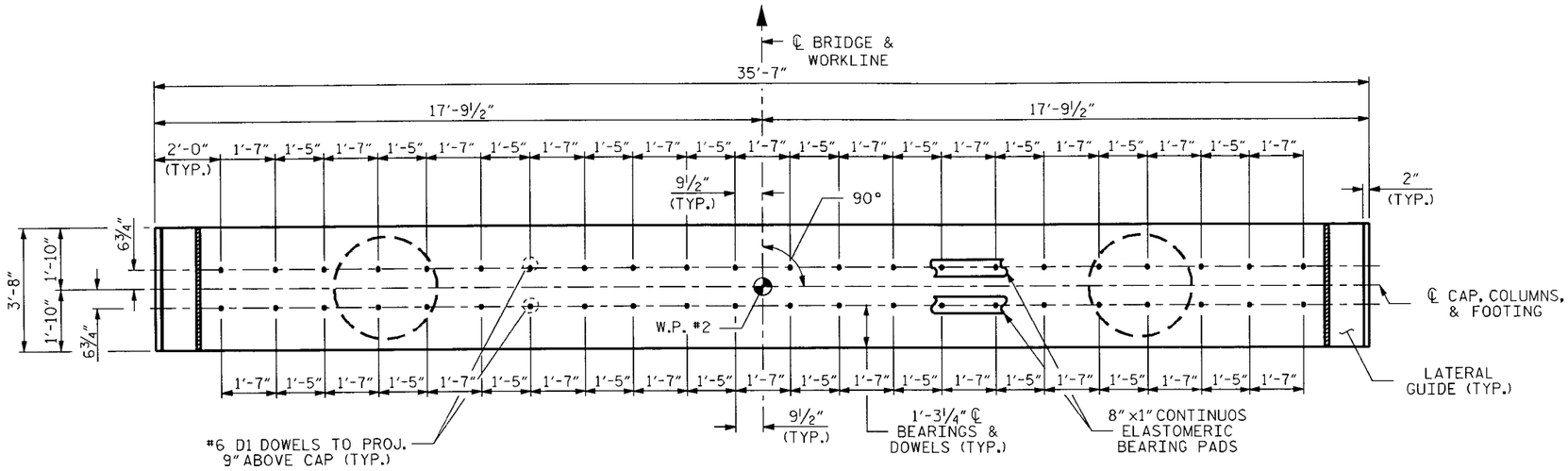

PLAN

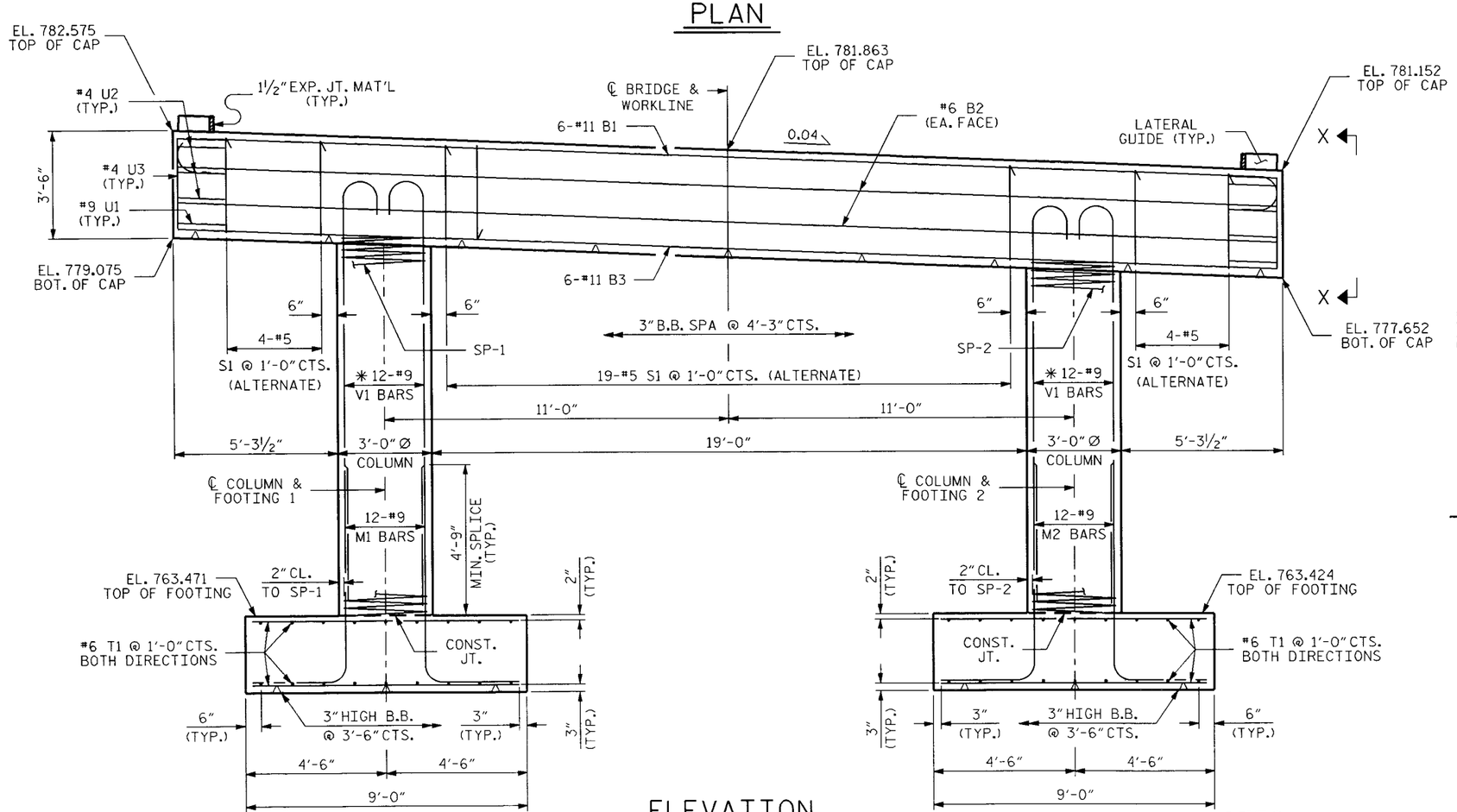

ELEVATION

✱ SEE NOTE

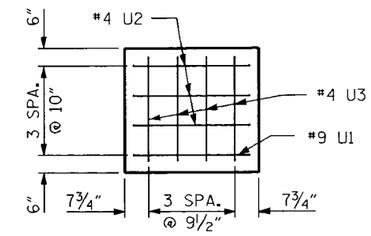

SECTION X-X

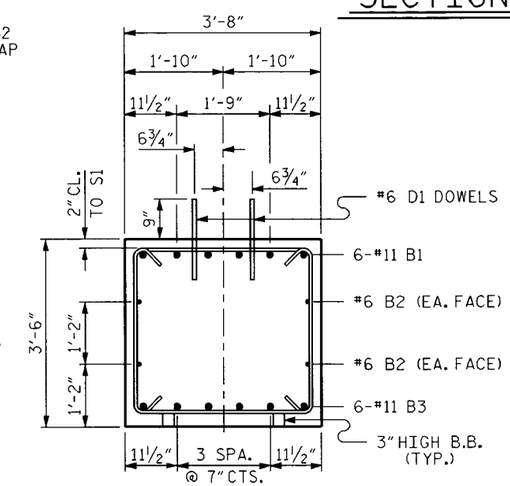

SECTION THROUGH CAP

NOTES:

✱✱✱ THE SP-1 AND SP-2 SPIRAL REINFORCING STEEL SHALL BE W20 OR D-20 COLD DRAWN WIRE OR #4 PLAIN OR DEFORMED BAR.

PROJECT NO. 33437
COUNTY: CLEVELAND
STATION: 17+98.00
REPLACES BRIDGE NO. 129

STATE OF NORTH CAROLINA
DEPARTMENT OF TRANSPORTATION
RALEIGH

SUBSTRUCTURE

BENT NO. 1

REVISIONS						SHEET NO.
NO.	BY	DATE	NO.	BY	DATE	11
1			3			TOTAL SHEETS
2			4			27

DRAWN BY: MTP/STS DATE: 09/11
CHECKED BY: RW/PDB DATE: 09/11

B-4075

CLEVELAND

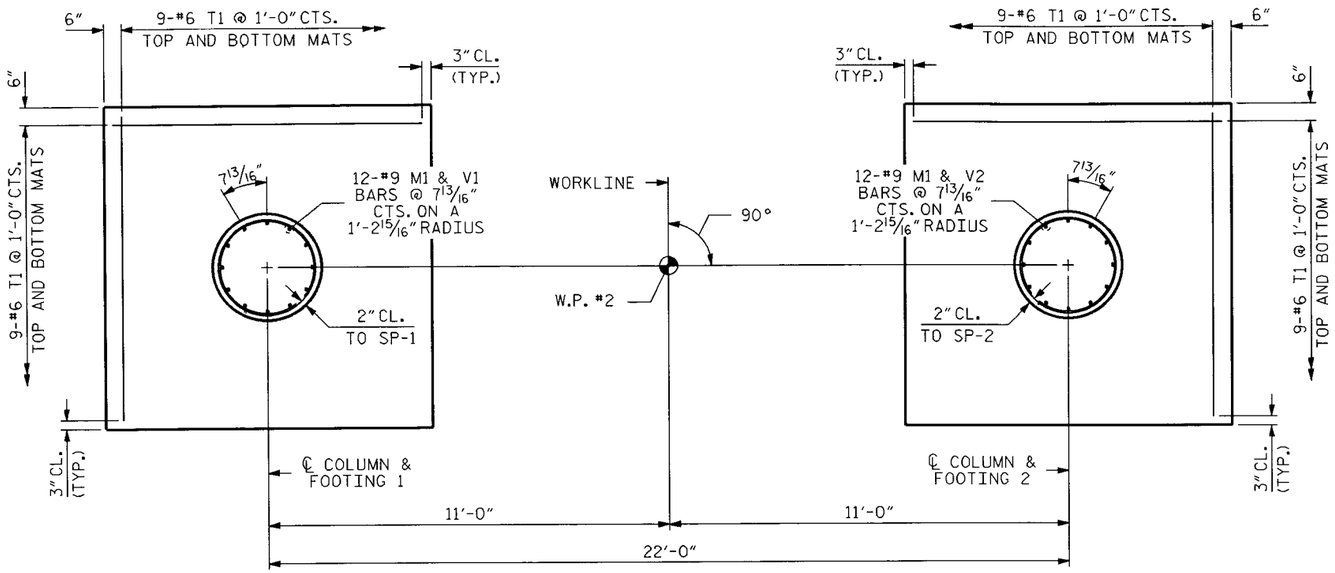

PLAN OF COLUMNS AND SPREAD FOOTINGS

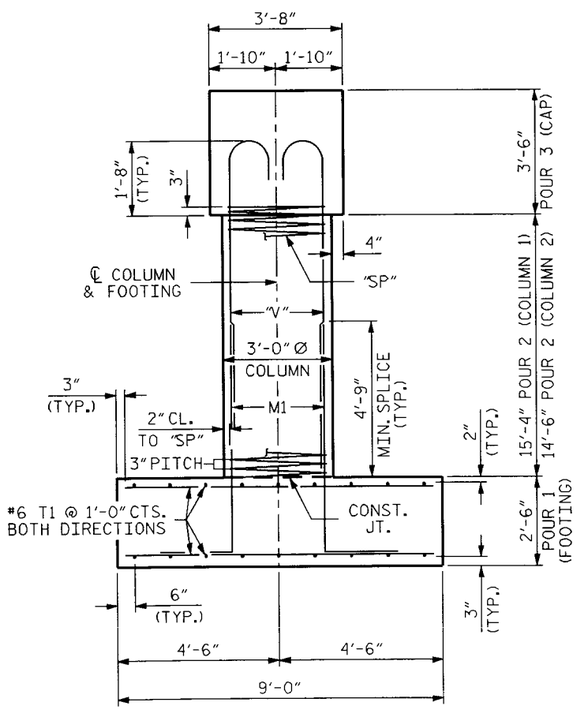

END ELEVATION

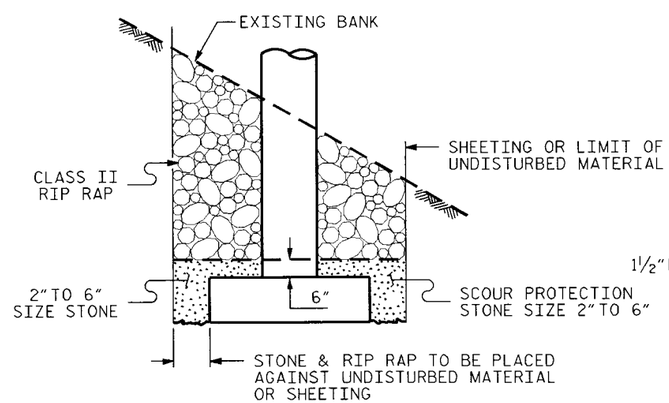

PIER SCOUR PROTECTION FOR BENT 1

BAR TYPES

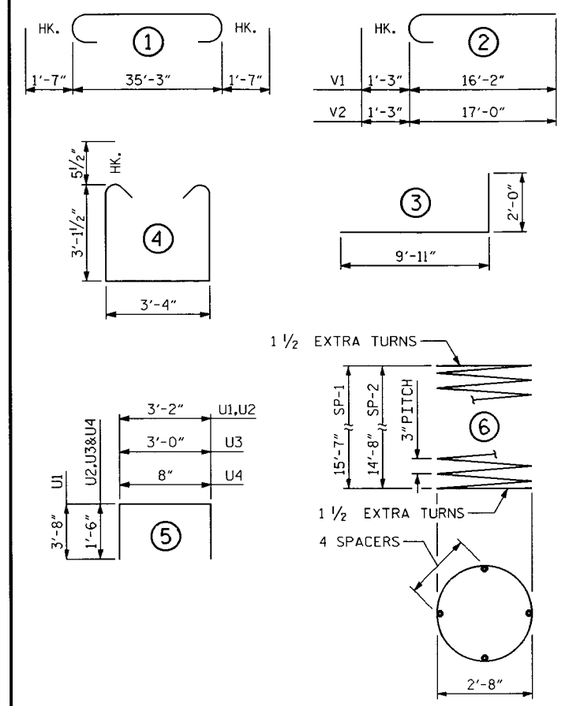

ALL BAR DIMENSIONS ARE OUT TO OUT

BILL OF MATERIAL

BENT 1

BAR	NO.	SIZE	TYPE	LENGTH	WEIGHT
B1	6	11	1	38'-5"	1224
B2	4	6	STR	35'-3"	212
B3	6	11	STR	35'-3"	1124
B4	4	5	STR	3'-2"	13
D1	44	6	STR	1'-6"	99
M1	24	9	3	11'-11"	972
S1	27	5	4	10'-6"	296
T1	72	6	STR	8'-6"	919
U1	2	9	5	10'-6"	71
U2	6	4	5	6'-2"	25
U3	8	4	5	6'-0"	32
U4	10	6	5	3'-8"	55
V1	12	9	2	17'-5"	711
V2	12	9	2	18'-3"	745

REINFORCING STEEL = 6498 LBS

SPIRAL COLUMN REINFORCING STEEL

BAR	NO.	SIZE	TYPE	LENGTH	WEIGHT
SP1	1	4	6	544'-7"	364
SP2	1	4	6	511'-7"	342

SPIRAL REINFORCING STEEL = 706 LBS

CLASS A CONCRETE:

POUR 1:	SPREAD FOOTINGS	15.0 C.Y.
POUR 2:	COLUMNS	7.8 C.Y.
POUR 3:	CAP	17.0 C.Y.
POUR 4:	LATERAL GUIDES	0.1 C.Y.
	TOTAL	39.9 C.Y.

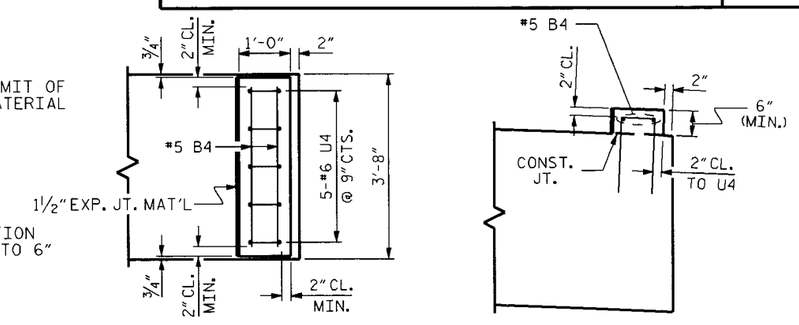

PLAN

ELEVATION

LATERAL GUIDE DETAILS

SPECIAL PROVISIONS FOR SUBSTRUCTURE SCOUR PROTECTION

1. SUBSTRUCTURE SCOUR PROTECTION SHALL BE PROVIDED AS INDICATED IN THE PLANS. THE TWO TO SIX INCH SIZE STONE SHALL BE PLACED AFTER FOOTING FORMWORK HAS BEEN REMOVED AND WHILE THE EXCAVATION IS DEWATERED. THE RIP RAP STONE SHALL BE PLACED BEFORE THE COFFERDAM SHEETING IS REMOVED, EITHER BEFORE OR AFTER THE EXCAVATION IS ALLOWED TO FLOOD. WHEN NO SHEETING IS USED, EACH STONE TYPE SHALL BE PLACED TO THE REQUIRED THICKNESS AND SHALL EXTEND HORIZONTALLY TO THE UNDISTURBED MATERIAL.
2. THE TWO TO SIX INCH SIZE SCOUR PROTECTION STONE SHALL BE HARD AND DURABLE IN NATURE. WHILE NO SPECIFIC GRADATION IS REQUIRED, THE VARIOUS SIZES OF STONE SHALL BE REASONABLY EQUALLY DISTRIBUTED WITHIN THE REQUIRED SIZE RANGE. THE STONE SHALL BE ESSENTIALLY CUBICAL IN SHAPE.
3. BASIS OF PAYMENT:

   THE ENTIRE COST OF THE ABOVE WORK INCLUDING THE TWO TO SIX INCH SIZE STONE, MATERIALS, EQUIPMENT, TOOLS, LABOR, AND INCIDENTALS NECESSARY TO COMPLETE THE WORK SHALL BE INCLUDED IN THE LUMP SUM BID PRICE FOR PLACEMENT OF SUBSTRUCTURE, EXCEPT THAT CLASS II RIP RAP SHALL BE PAID FOR AT THE UNIT PRICE PER TON FOR CLASS II RIP RAP.

PROJECT NO. 33437
COUNTY: CLEVELAND
STATION: 17+98.00
REPLACES BRIDGE NO. 129

STATE OF NORTH CAROLINA
DEPARTMENT OF TRANSPORTATION
RALEIGH

SUBSTRUCTURE

BENT NO. 1

REVISIONS						SHEET NO.
NO.	BY	DATE	NO.	BY	DATE	12
1			3			TOTAL SHEETS
2			4			27

DRAWN BY: MTP/STS DATE: 09/11
CHECKED BY: RW/PDB DATE: 09/11

B-4075

CLEVELAND

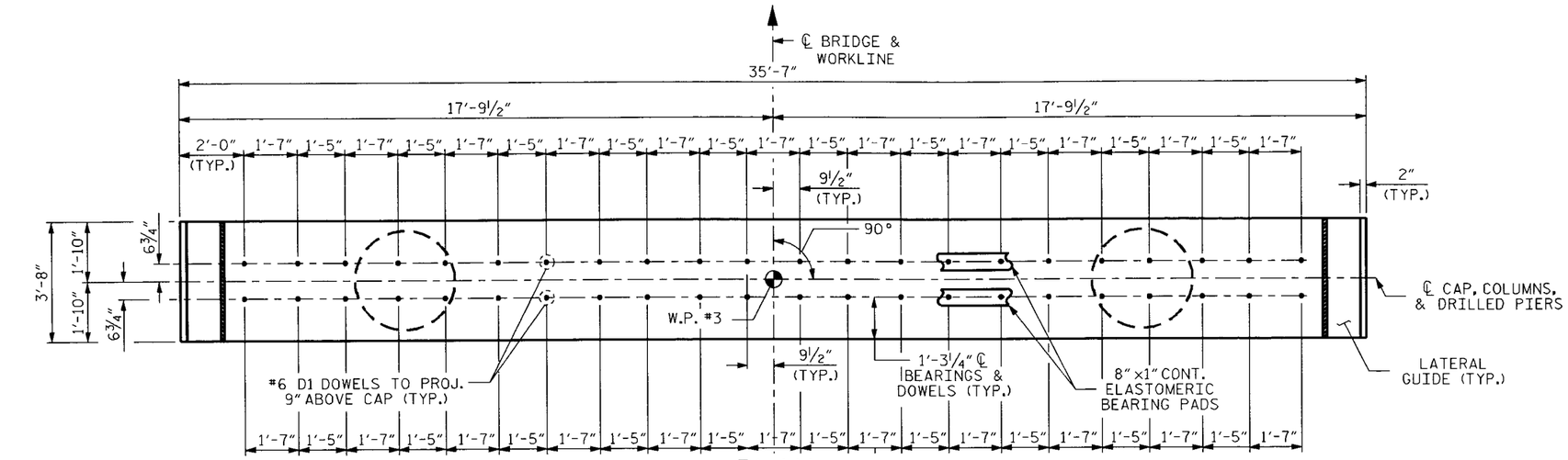

PLAN

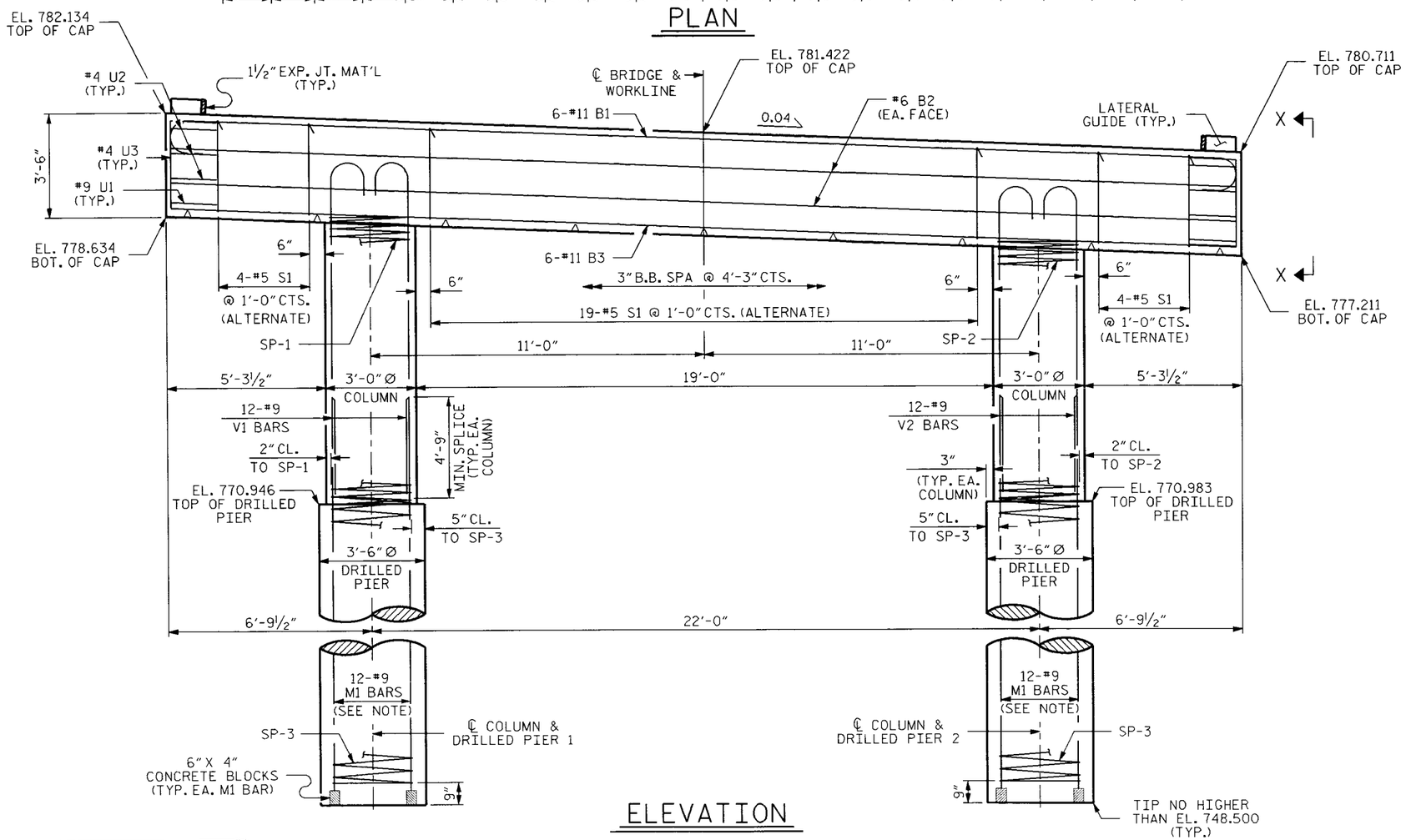

ELEVATION

NOTES

1. STIRRUPS IN CAP MAY BE SHIFTED AS NECESSARY TO CLEAR DOWELS.
2. HOOKS ON "V" BARS MAY BE TURNED AS NECESSARY FOR PLACING REINFORCING STEEL.
3. ALL STEEL IN THE DRILLED PIERS IS INCLUDED IN THE PAY ITEM FOR "PLACEMENT OF SUBSTRUCTURE".
4. THE LOCATION OF THE CONSTRUCTION JOINT IN THE DRILLED PIERS IS BASED ON THE APPROXIMATE GROUND LINE ELEVATION. IF THE CONSTRUCTION JOINT IS ABOVE THE ACTUAL GROUND ELEVATION, THE CONTRACTOR SHALL PLACE THE CONSTRUCTION JOINT ONE FOOT BELOW THE GROUND LINE.
5. THE CONTRACTOR'S ATTENTION IS CALLED TO THE FACT THAT THE "M1" LONGITUDINAL REINFORCEMENT FOR THE DRILLED PIERS IS DETAILED WITH AT LEAST 3 FEET OF EXTRA LENGTH WHICH WILL NEED TO BE CUT OFF IF DRILLED PIER IS NOT EXTENDED BELOW THE BOTTOM OF DRILLED PIER PLAN ELEVATION.
6. SPLICING OF THE LONGITUDINAL BARS IN THE DRILLED PIER WILL NOT BE PERMITTED.
7. FOR DRILLED PIERS, SEE SPECIAL PROVISIONS.

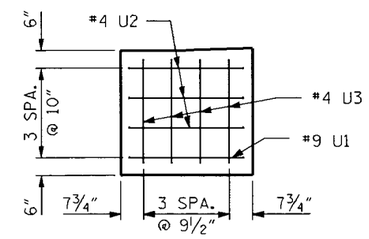

SECTION X-X

PROJECT NO. 33437
COUNTY: CLEVELAND
STATION: 17+98.00
REPLACES BRIDGE NO. 129

STATE OF NORTH CAROLINA
DEPARTMENT OF TRANSPORTATION
RALEIGH

SUBSTRUCTURE

BENT NO. 2

REVISIONS						SHEET NO.
NO.	BY	DATE	NO.	BY	DATE	13
1			3			TOTAL SHEETS
2			4			27

DRAWN BY: MTP/STS DATE: 09/11
CHECKED BY: RW/PDB DATE: 09/11

B-4075

CLEVELAND

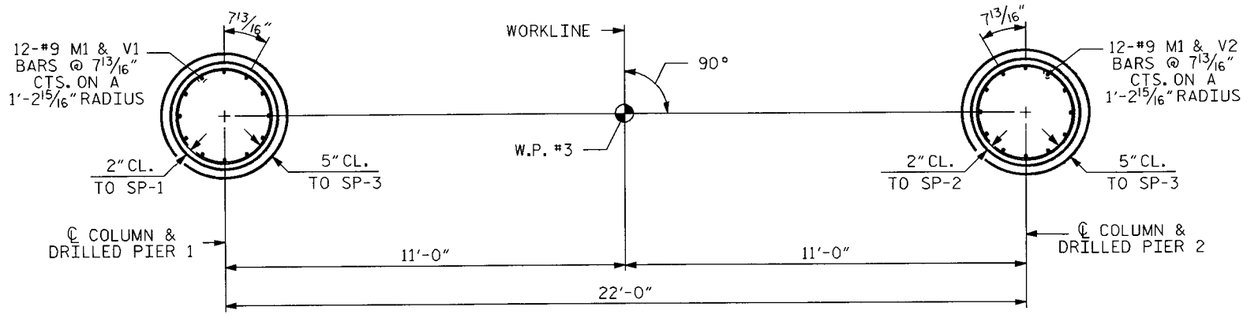

PLAN OF COLUMNS AND DRILLED PIERS

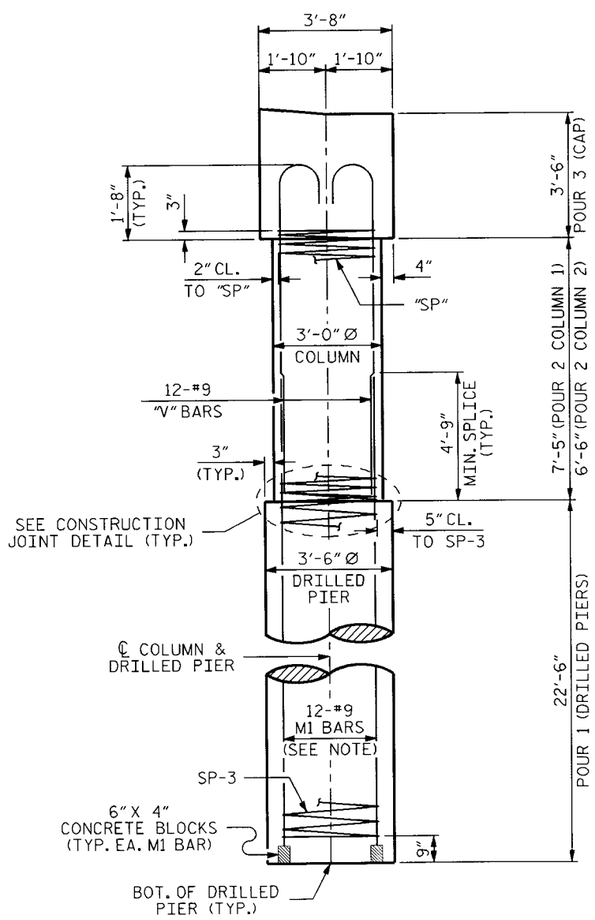

END ELEVATION

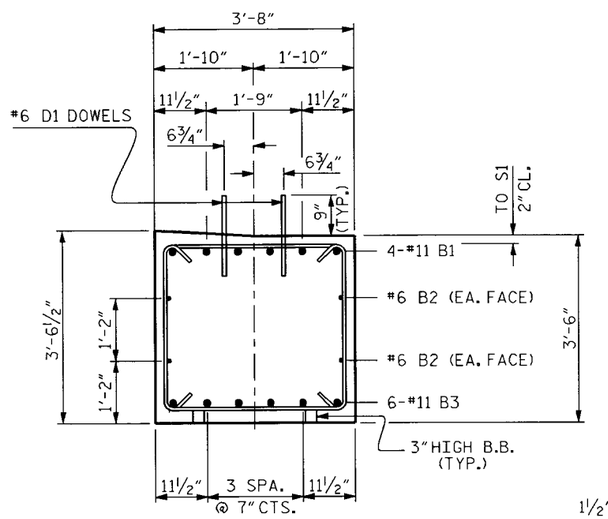

SECTION THROUGH CAP

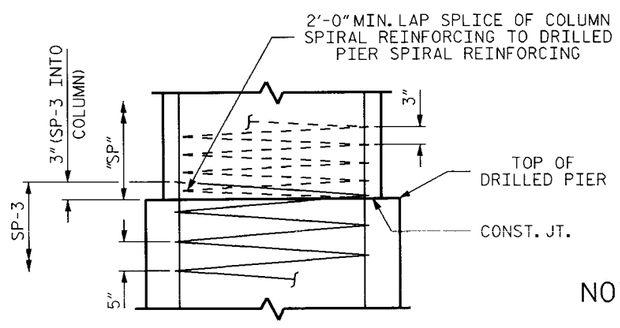

CONSTRUCTION JOINT DETAIL

BAR TYPES

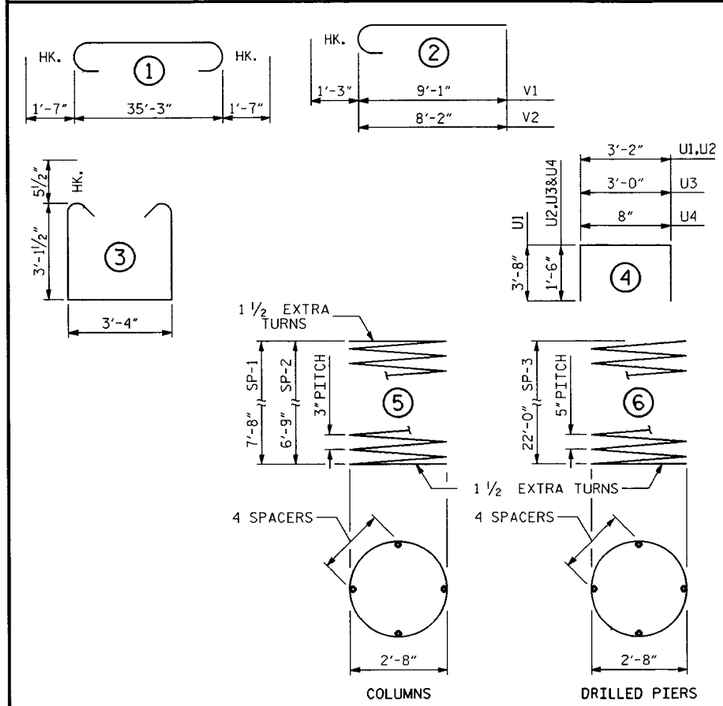

ALL BAR DIMENSIONS ARE OUT TO OUT

BILL OF MATERIAL

BENT 2

BAR	NO.	SIZE	TYPE	LENGTH	WEIGHT
B1	6	11	1	38'-5"	1224
B2	4	6	STR	35'-3"	212
B3	6	11	STR	35'-3"	1124
B4	4	5	STR	3'-2"	13
D1	44	6	STR	1'-6"	99
M1	24	9	STR	29'-6"	2407
S1	27	5	3	10'-6"	296
U1	2	9	4	10'-6"	71
U2	6	4	4	6'-2"	25
U3	8	4	4	6'-0"	32
U4	10	6	4	3'-8"	55
V1	12	9	2	10'-4"	422
V2	12	9	2	9'-5"	384

REINFORCING STEEL = 6364 LBS

SPIRAL COLUMN REINFORCING STEEL

BAR	NO.	SIZE	TYPE	LENGTH	WEIGHT
SP1	1	4	5	280-7	187
SP2	1	4	5	247-6	165
SP3	2	5	6	471-7	983

SPIRAL REINFORCING STEEL = 1335 LBS

CLASS A CONCRETE:

POUR 1:	DRILLED PIERS	16.1 C.Y.
POUR 2:	COLUMNS	3.7 C.Y.
POUR 3:	CAP	17.0 C.Y.
POUR 4:	LATERAL GUIDES	0.1 C.Y.
	TOTAL	36.9 C.Y.

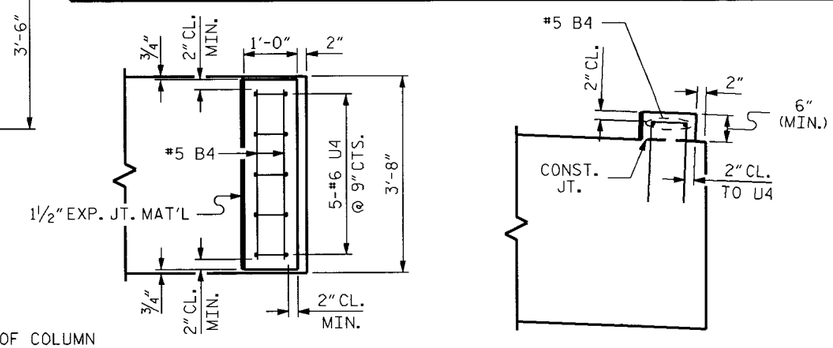

PLAN ELEVATION

LATERAL GUIDE DETAILS

NOTES:

*** THE SP-1 AND SP-2 SPIRAL REINFORCING STEEL SHALL BE W20 OR D-20 COLD DRAWN WIRE OR #4 PLAIN OR DEFORMED BAR.

** THE SP-3 SPIRAL REINFORCING STEEL SHALL BE W31 OR D-31 COLD DRAWN WIRE OR #5 PLAIN OR DEFORMED BAR.

PROJECT NO. 33437
COUNTY: CLEVELAND
STATION: 17+98.00
REPLACES BRIDGE NO. 129

STATE OF NORTH CAROLINA
DEPARTMENT OF TRANSPORTATION
RALEIGH

SUBSTRUCTURE

BENT NO. 2

REVISIONS						SHEET NO.
NO.	BY	DATE	NO.	BY	DATE	14
1			3			TOTAL SHEETS
2			4			27

DRAWN BY: MTP/STS DATE: 09/11
CHECKED BY: RW/PDB DATE: 09/11

B-4075

CLEVELAND

NOTES

1. STIRRUPS IN CAP MAY BE SHIFTED AS NECESSARY TO CLEAR DOWELS.
2. FOR SECTION A-A, WING, LATERAL GUIDE, AND PILE SPICE DETAILS, SEE SHEET 16.
3. ALIGN #5 S1 BARS VERTICALLY

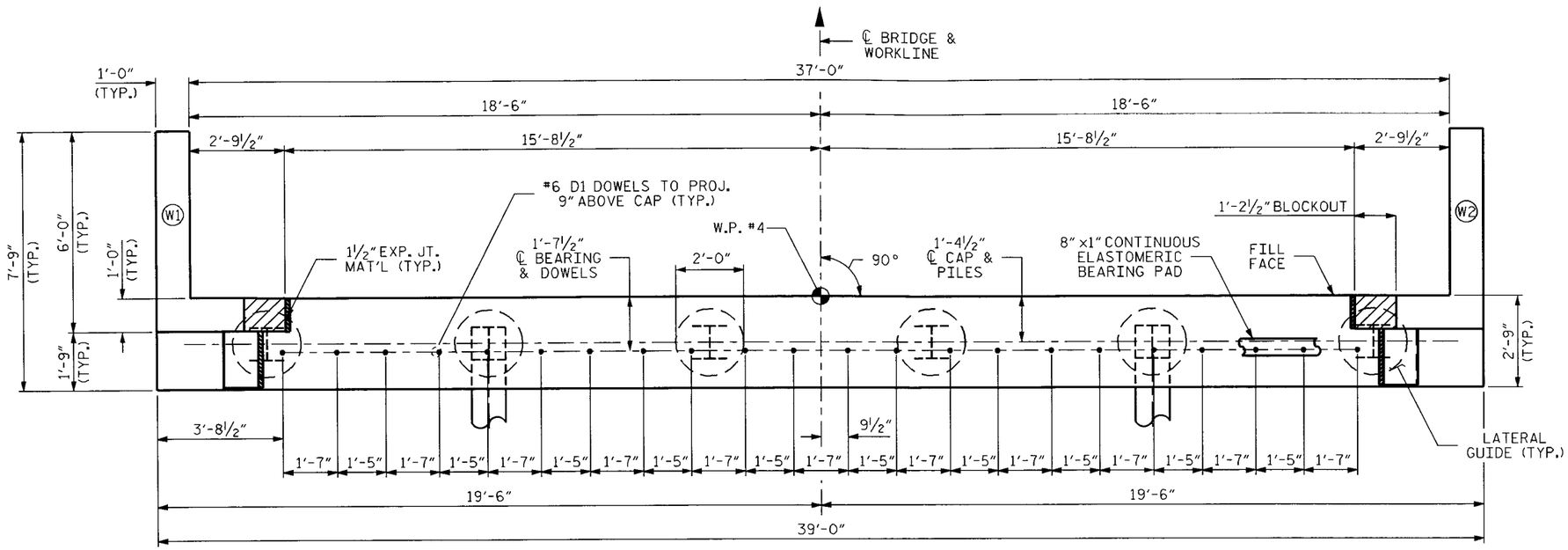

PLAN

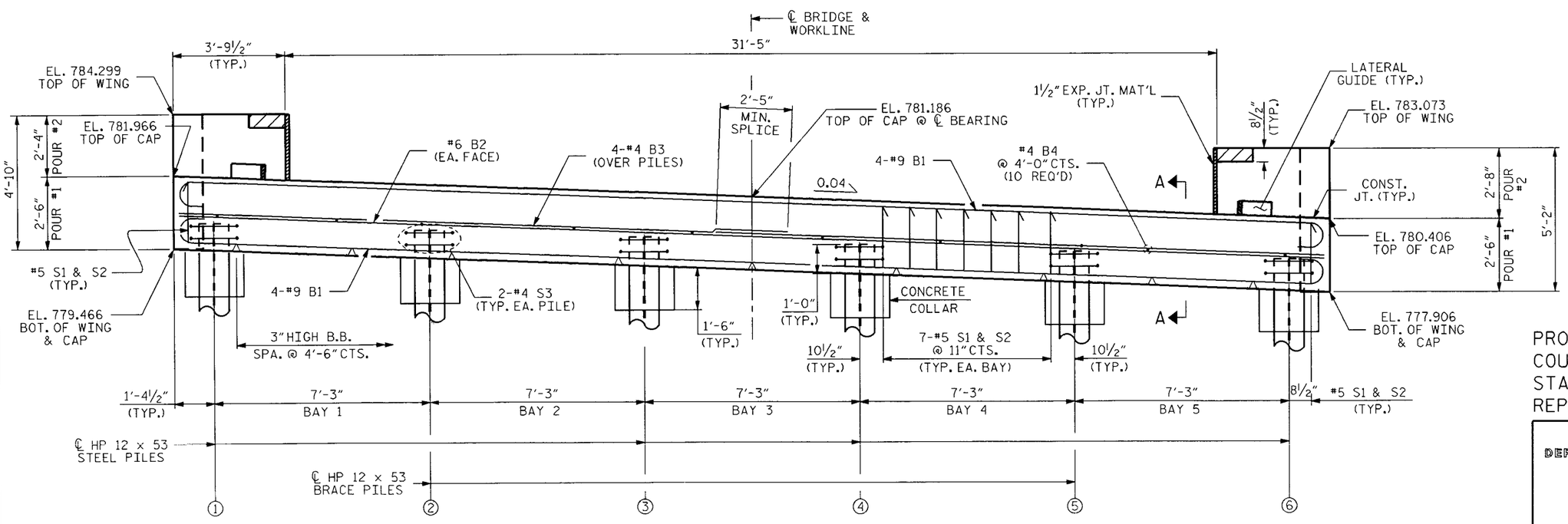

ELEVATION

TOP OF ℄ PILE ELEVATIONS

1	780.431
2	780.141
3	779.851
4	779.561
5	779.271
6	778.981

PROJECT NO. 33437
COUNTY: CLEVELAND
STATION: 17+98.00
REPLACES BRIDGE NO. 129

STATE OF NORTH CAROLINA
DEPARTMENT OF TRANSPORTATION
RALEIGH

SUBSTRUCTURE

END BENT NO. 2

REVISIONS						SHEET NO.
NO.	BY	DATE	NO.	BY	DATE	15
1			3			TOTAL SHEETS
2			4			27

DRAWN BY: MTP/STS DATE: 09/11
CHECKED BY: RW/PDB DATE: 09/11

ssandor AT BGMU240326 14-OCT-2011 15:42 S:\POC\Squad B\Current\Cleveland129,WBS33437\Structure\B-4075_bmu_E*.dgn

B-4075

CLEVELAND

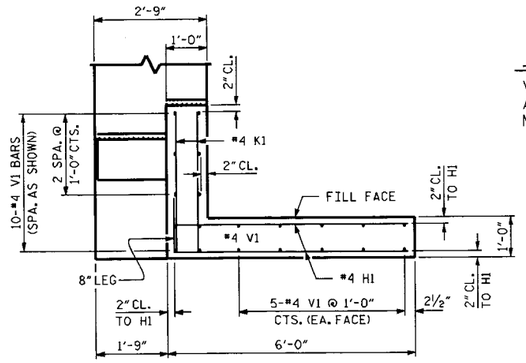

PLAN OF WING (W1)

NOTE

V1 & V2 BAR LENGTH MAY NEED TO BE ADJUSTED ABOVE THE TOP OF PILES, TO MAINTAIN 2" COVER AT TOP OF WING.

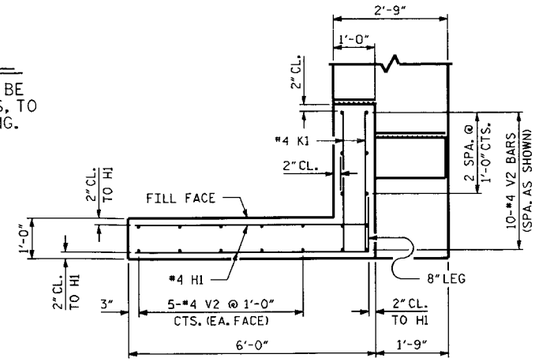

PLAN OF WING (W2)

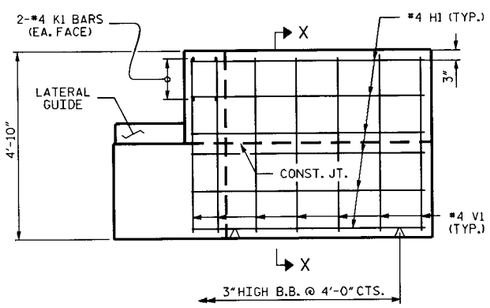

ELEVATION OF WING (W1)

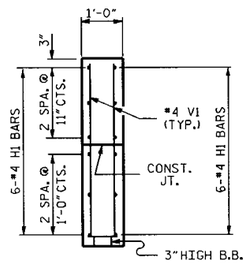

SECTION X-X

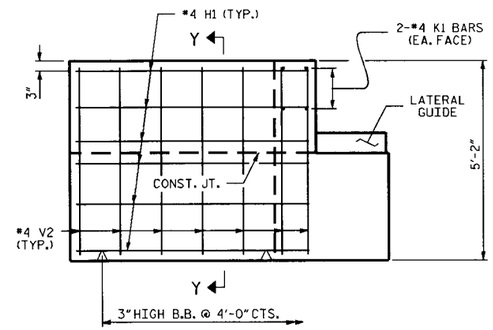

ELEVATION OF WING (W2)

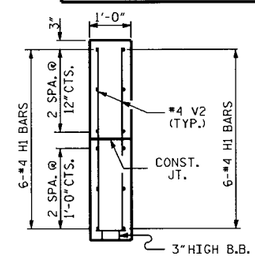

SECTION Y-Y

BAR TYPES

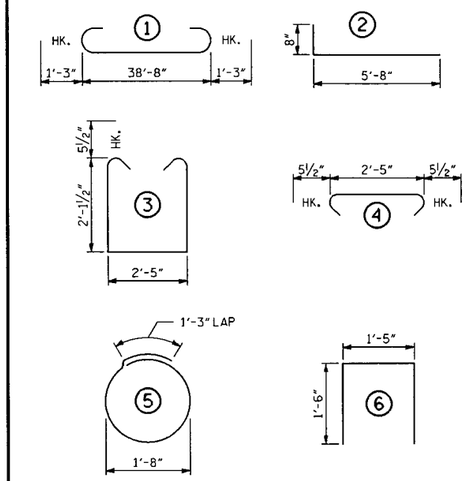

ALL BAR DIMENSIONS ARE OUT TO OUT

BILL OF MATERIAL

END BENT 2

BAR	NO.	SIZE	TYPE	LENGTH	WEIGHT
B1	8	9	1	41'-2"	1120
B2	2	6	STR	38'-8"	116
B3	8	4	STR	20'-7"	110
B4	10	4	STR	2'-5"	16
D1	22	6	STR	1'-6"	50
H1	24	4	2	6'-4"	102
K1	8	4	STR	3'-5"	18
S1	37	5	3	7'-7"	293
S2	37	5	4	3'-4"	129
S3	12	4	5	6'-6"	52
U1	4	5	6	4'-5"	18
V1	20	4	STR	4'-6"	60
V2	20	4	STR	4'-10"	65

REINFORCING STEEL = 2149 LBS

CLASS A CONCRETE:

POUR 1: CAP, COLLARS & LOWER PART OF WINGS 12.2 C.Y.

POUR 2: UPPER PART OF WINGS 1.6 C.Y.

POUR 3: LATERAL GUIDES 0.1 C.Y.

TOTAL 13.9 C.Y.

6 HP 12 X 53 STEEL PILES = 180 LN.FT.

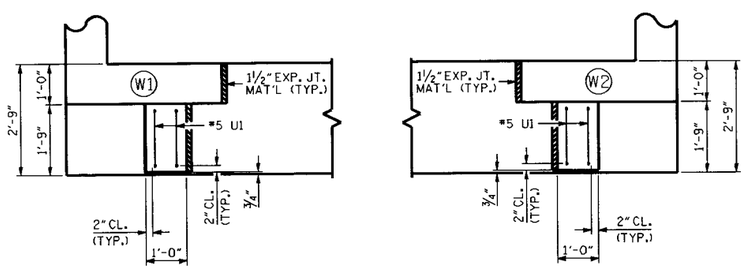

PLAN

PLAN

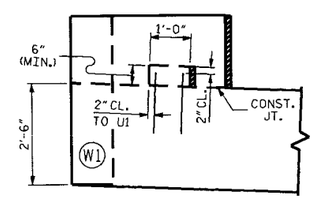

ELEVATION

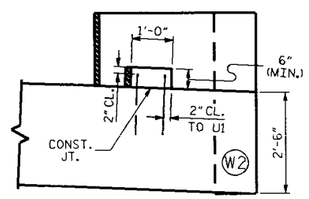

ELEVATION

LATERAL GUIDE DETAILS

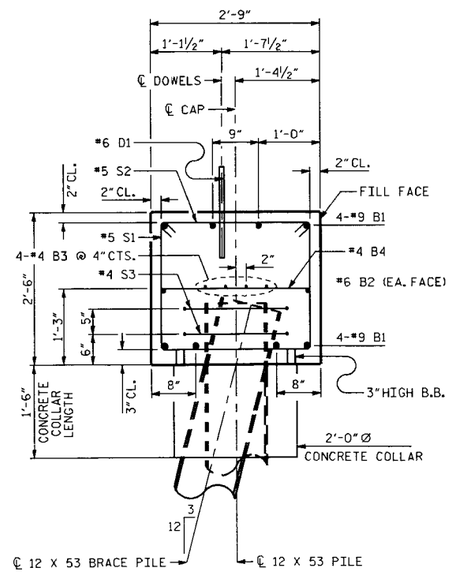

SECTION A-A

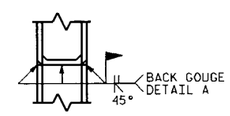

✱ PILE VERTICAL

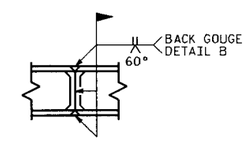

✱ PILE HORIZONTAL OR VERTICAL

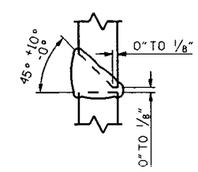

DETAIL A

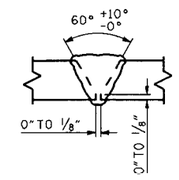

DETAIL B

✱ POSITION OF PILE DURING WELDING

PILE SPLICE DETAILS

PROJECT NO. 33437
COUNTY: CLEVELAND
STATION: 17+98.00
REPLACES BRIDGE NO. 129

STATE OF NORTH CAROLINA
DEPARTMENT OF TRANSPORTATION
RALEIGH

SUBSTRUCTURE

END BENT NO. 2

REVISIONS						SHEET NO.
NO.	BY	DATE	NO.	BY	DATE	16
1			3			TOTAL SHEETS
2			4			27

DRAWN BY: MTP/STS DATE: 09/11
CHECKED BY: RW/PDB DATE: 09/11

B-4075

CLEVELAND

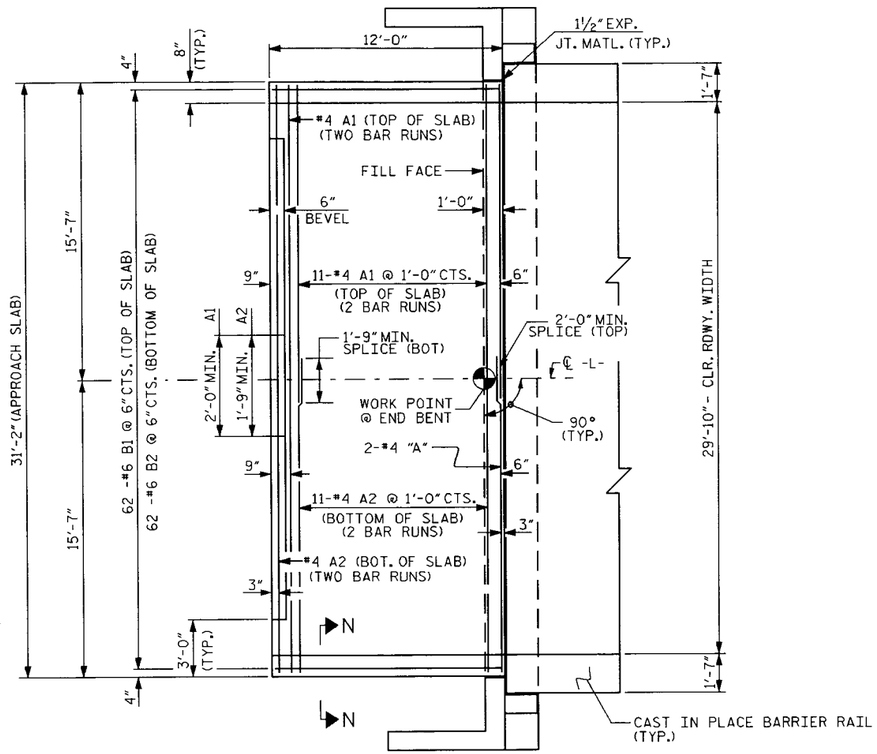

PLAN OF APPROACH SLAB

NOTES

1. FOR REINFORCED BRIDGE APPROACH FILL INCLUDING FABRIC, IMPERMEABLE GEOMEMBRANE, 4" Ø DRAINAGE PIPE, #78M STONE, AND SELECT MATERIAL, SEE ROADWAY STANDARD 422.10.
2. AREA BETWEEN THE WINGWALL AND APPROACH SLAB SHALL BE GRADED TO DRAIN THE WATER AWAY FROM THE FILL FACE OF THE BRIDGE AND SHALL BE PAVED WITH 4" OF INTERMEDIATE OR SURFACE COURSE ASPHALT.
3. THE 6" COMP. A.B.C. SHALL EXTEND 10'-0" BEYOND THE END OF THE APPROACH SLAB AND 1'-0" OUTSIDE OF EACH EDGE OF SLAB.
4. THE CONTRACTOR MAY USE 4" TYPE B-25.0B ASPHALT CONCRETE BASE COURSE IN LIEU OF 6" COMP. A.B.C. IF THIS OPTION IS USED, THE BASE COURSE SHALL EXTEND 1'-0" BEYOND THE END OF THE APPROACH SLAB AND THE WIDTH SHALL BE THE SAME AS THAT OF THE APPROACH SLAB.
5. THE CONTRACTOR MAY USE 5" CLASS "A" CONCRETE BASE IN LIEU OF 6" COMP. A.B.C. IF THIS OPTION IS USED, THE CONCRETE BASE SHALL EXTEND 1'-0" BEYOND THE END OF THE APPROACH SLAB AND THE WIDTH SHALL BE THE SAME AS THAT OF THE APPROACH SLAB. THE CONCRETE SHALL BE FINISHED TO A SMOOTH SURFACE AND A LAYER OF 30 LB ROOFING FELT SHALL BE PLACED BETWEEN THE CONCRETE BASE AND THE APPROACH SLAB TO PREVENT BOND. THE APPROACH SLAB SHALL NOT BE CAST UNTIL THE CONCRETE BASE HAS REACHED AN AGE OF THREE CURING DAYS.
6. TEMPORARY DRAINAGE AND TEMPORARY BERM AND SLOPE DRAINS WILL BE PAID FOR UNDER THE LUMP SUM PRICE FOR APPROACH SLABS. SEE ROADWAY STANDARD 1622.01.
7. FOR JOINT DETAILS, SEE SHEET 8.
8. THE JOINT AT THE END BENT SHALL BE GROUTED AS SOON AS PRACTICAL AFTER THE CONSTRUCTION OF THE APPROACH SLABS.
9. APPROACH SLAB GROOVING IS NOT REQUIRED.

BILL OF MATERIAL

FOR ONE APPROACH SLAB (2 REQ'D)

BAR	NO.	SIZE	TYPE	LENGTH	WEIGHT
* A1	26	4	STR	16'-5"	285
A2	26	4	STR	16'-4"	197
* B1	62	6	STR	11'-3"	1048
B2	62	6	STR	11'-8"	1086
REINFORCING STEEL				LBS.	1283
* EPOXY COATED REINFORCING STEEL				LBS.	1333
CLASS AA CONCRETE				C.Y.	14.0

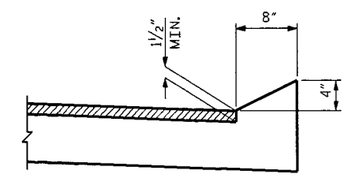

SECTION N-N

CURB DETAILS

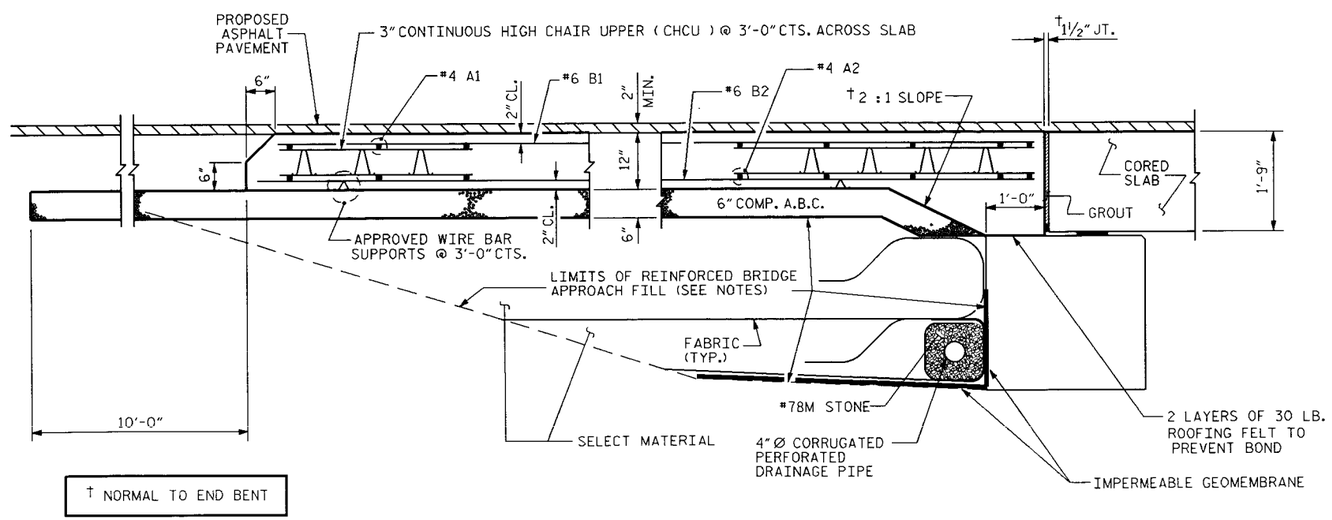

SECTION THRU SLAB

PROJECT NO. 33437
COUNTY: CLEVELAND
STATION: 17+98.00
REPLACES BRIDGE NO. 129

STATE OF NORTH CAROLINA
DEPARTMENT OF TRANSPORTATION
RALEIGH

APPROACH SLAB DETAILS

REVISIONS						SHEET NO.
NO.	BY	DATE	NO.	BY	DATE	17
1			3			TOTAL SHEETS
2			4			27

DRAWN BY: MTP DATE: 06/07
CHECKED BY: PDB DATE: 09/11

B-4075

CLEVELAND

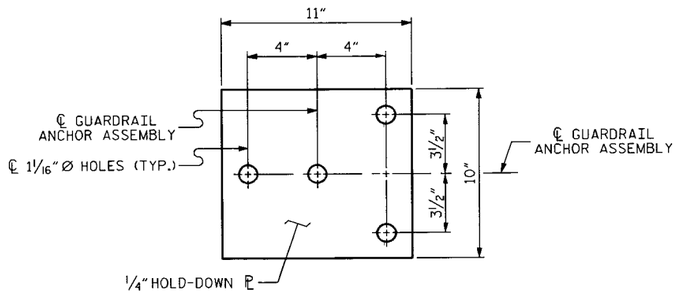

PLAN

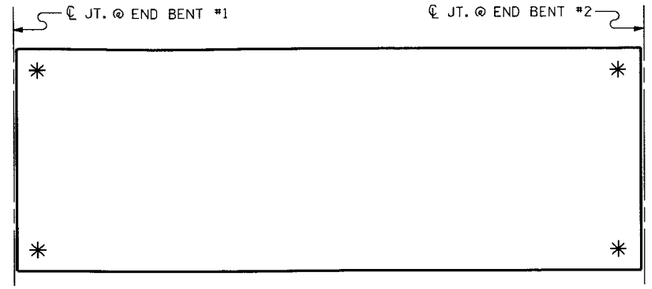

SKETCH SHOWING POINTS OF ATTACHMENT

NOTES

1. THE GUARDRAIL ANCHOR ASSEMBLY SHALL CONSIST OF A 1/4" HOLD-DOWN PLATE AND 4 - 7/8" Ø BOLTS WITH NUTS AND WASHERS, RUBRAIL, AND ADHESIVELY ANCHORED BOLTS.
2. THE HOLD-DOWN PLATE SHALL CONFORM TO AASHTO M270 GRADE 36. AFTER FABRICATION, THE HOLD-DOWN PLATE SHALL BE HOT-DIP GALVANIZED IN ACCORDANCE WITH AASHTO M111.
3. BOLTS SHALL CONFORM TO THE REQUIREMENTS OF ASTM A307 AND NUTS SHALL CONFORM TO THE REQUIREMENTS OF AASHTO M291. BOLTS, NUTS, AND WASHERS SHALL BE GALVANIZED. (AT THE CONTRACTORS'S OPTION, STAINLESS STEEL BOLTS, NUTS, AND WASHERS MAY BE USED AS AN ALTERNATE FOR THE 7/8" Ø GALVANIZED BOLTS, NUTS, AND WASHERS. THEY SHALL CONFORM TO OR EXCEED THE MECHANICAL REQUIREMENTS OF ASTM A307. THE USE OF THE ALTERNATE SHALL BE APPROVED BY THE ENGINEER.)
4. THE GUARDRAIL ANCHOR ASSEMBLY IS REQUIRED AT ALL POINTS WHERE APPROACH GUARDRAIL IS TO BE ATTACHED TO THE END OF BARRIER RAIL. FOR POINTS OF ATTACHMENT, SEE SKETCH.
5. AFTER INSTALLATION, THE EXPOSED THREAD OF THE BOLT SHALL BE BURRED WITH A SHARP POINTED TOOL.
6. THE COST OF THE GUARDRAIL ANCHOR ASSEMBLY SHALL BE INCLUDED IN THE UNIT CONTRACT PRICE BID FOR STEEL BM GUARDRAIL.
7. THE 1 1/4" Ø HOLES SHALL BE FORMED OR DRILLED WITH A CORE BIT. IMPACT TOOLS WILL NOT BE PERMITTED. ANY CONCRETE DAMAGED BY THIS WORK SHALL BE REPAIRED TO THE SATISFACTION OF THE ENGINEER.
8. THE C6 X 8.2 RUBRAIL IS TO BE ADHESIVELY ANCHORED TO THE RAIL USING THREE 3/4" Ø X 6" BOLTS WITH WASHERS. LEVEL ONE FIELD TESTING IS REQUIRED AND THE YIELD LOAD OF THE 3/4" Ø BOLT IS 12 KIPS. SEE ROADWAY STANDARD 862.03 FOR DETAILS AND LOCATION OF THE RUBRAIL.
9. SHIFT FIRST GUARDRAIL POST AS NECESSARY TO CLEAR END BENT CAP.

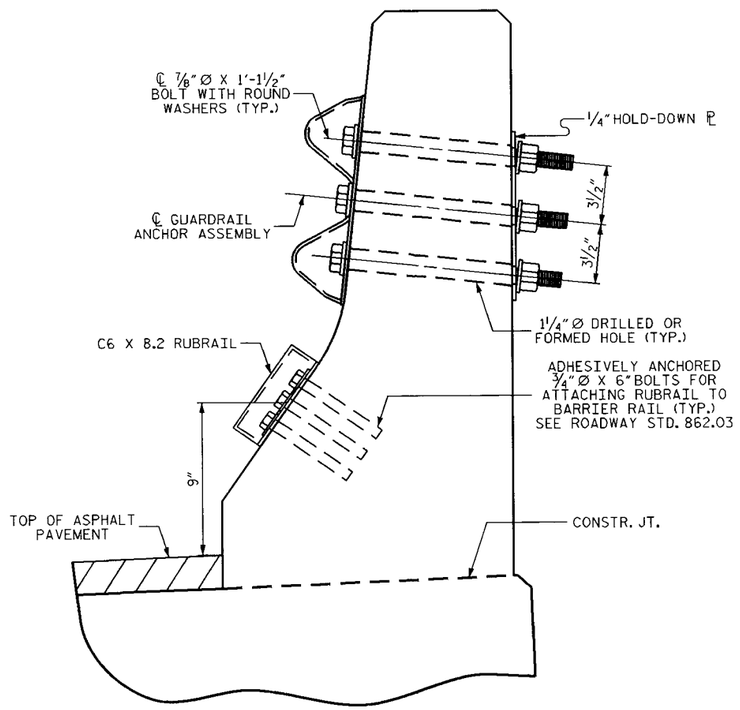

SECTION E-E

TYPE B-77 GUARDRAIL ANCHOR ASSEMBLY DETAILS

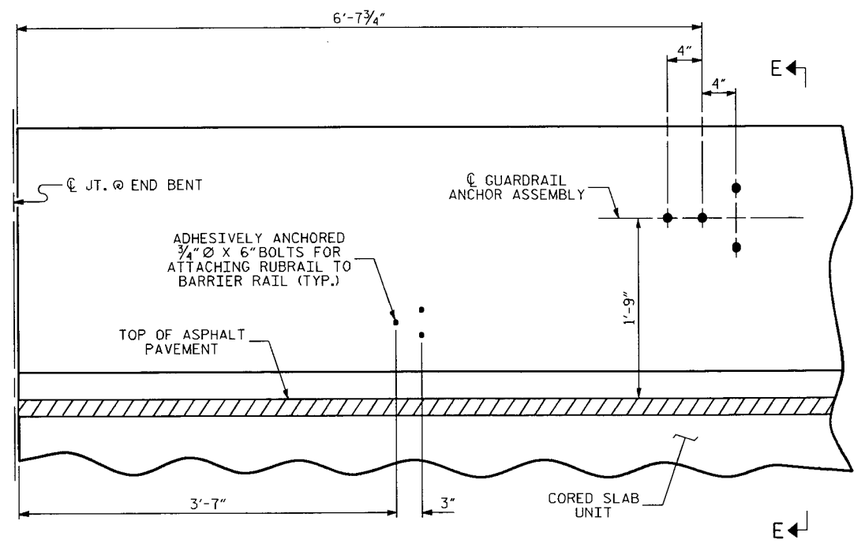

LOCATION OF ANCHORS FOR GUARDRAIL

END BENT #1 SHOWN, END BENT #2 SIMILAR
FOR LOCATION OF RUBRAIL, SEE ROADWAY STD. 862.03

PROJECT NO. 33437
COUNTY: CLEVELAND
STATION: 17+98.00
REPLACES BRIDGE NO. 129

STATE OF NORTH CAROLINA
DEPARTMENT OF TRANSPORTATION
RALEIGH

GUARDRAIL ANCHORAGE FOR BARRIER RAIL

REVISIONS						SHEET NO.
NO.	BY	DATE	NO.	BY	DATE	18
1			3			TOTAL SHEETS
2			4			27

DRAWN BY: MTP DATE: 06/07
CHECKED BY: RW/PDB DATE: 09/11

ssandor AT BGMU240326 17-OCT-2011 06:54 S:\POC\Squad B\Current\Cleveland129_WBS33437\Structure\B-4075_bmu_AS.dgn

B-4075

CLEVELAND

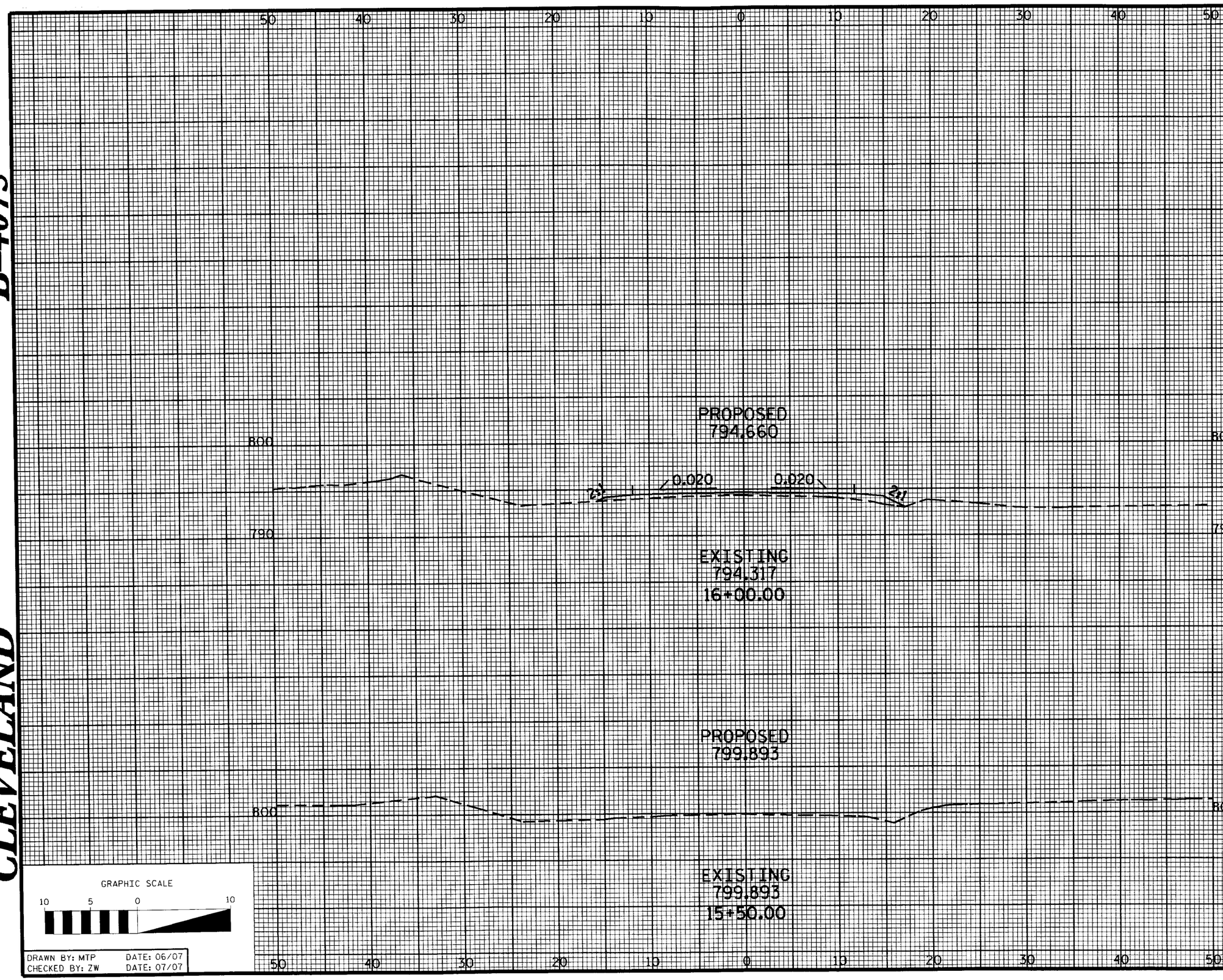

DRAWN BY: MTP DATE: 06/07
CHECKED BY: ZW DATE: 07/07

PROJECT NO. 33437
COUNTY: CLEVELAND
STATION: 17+98.00
REPLACES BRIDGE NO. 129

STATE OF NORTH CAROLINA
DEPARTMENT OF TRANSPORTATION
RALEIGH

PROPOSED
CROSS SECTIONS

REVISIONS						SHEET NO.
NO.	BY	DATE	NO.	BY	DATE	19
1			3			TOTAL SHEETS
2			4			27

ssandor AT BGMU240326 29-SEP-2011 15:19

B-4075

CLEVELAND

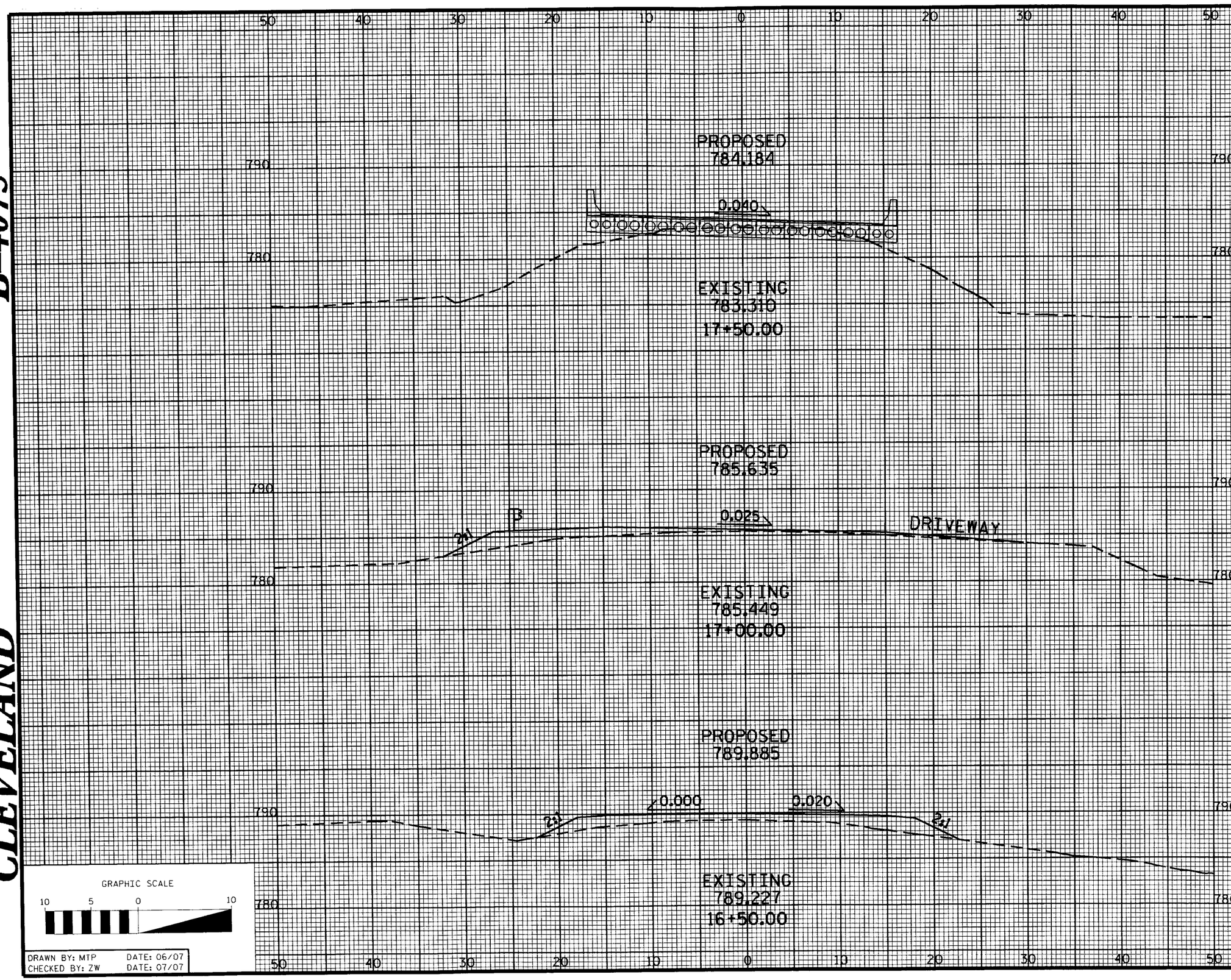

GRAPHIC SCALE

10 5 0 10

DRAWN BY: MTP DATE: 06/07
CHECKED BY: ZW DATE: 07/07

PROJECT NO. 33437
COUNTY: CLEVELAND
STATION: 17+98.00
REPLACES BRIDGE NO. 129

STATE OF NORTH CAROLINA
DEPARTMENT OF TRANSPORTATION
RALEIGH

PROPOSED
CROSS SECTIONS

REVISIONS						SHEET NO.
NO.	BY	DATE	NO.	BY	DATE	20
1			3			TOTAL SHEETS
2			4			27

ssandor AT BGMU240326 29-SEP-2011 15:22

B-4075

CLEVELAND

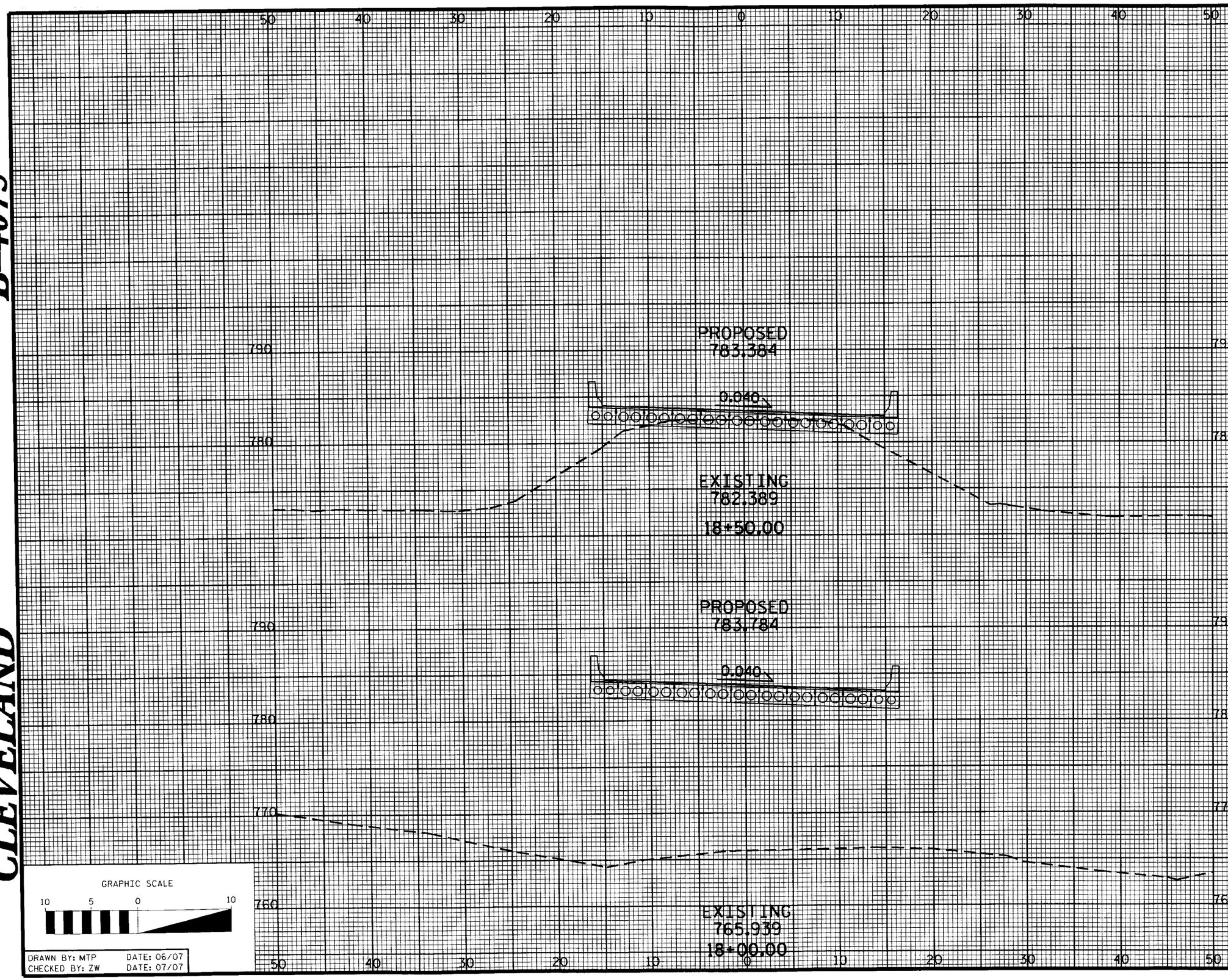

DRAWN BY: MTP DATE: 06/07
CHECKED BY: ZW DATE: 07/07

PROJECT NO. 33437
COUNTY: CLEVELAND
STATION: 17+98.00
REPLACES BRIDGE NO. 129

STATE OF NORTH CAROLINA
DEPARTMENT OF TRANSPORTATION
RALEIGH

PROPOSED
CROSS SECTIONS

REVISIONS						SHEET NO.
NO.	BY	DATE	NO.	BY	DATE	21
1			3			TOTAL SHEETS
2			4			27

ssandor AT BGMU240326 29-SEP-2011 15:24

B-4075

CLEVELAND

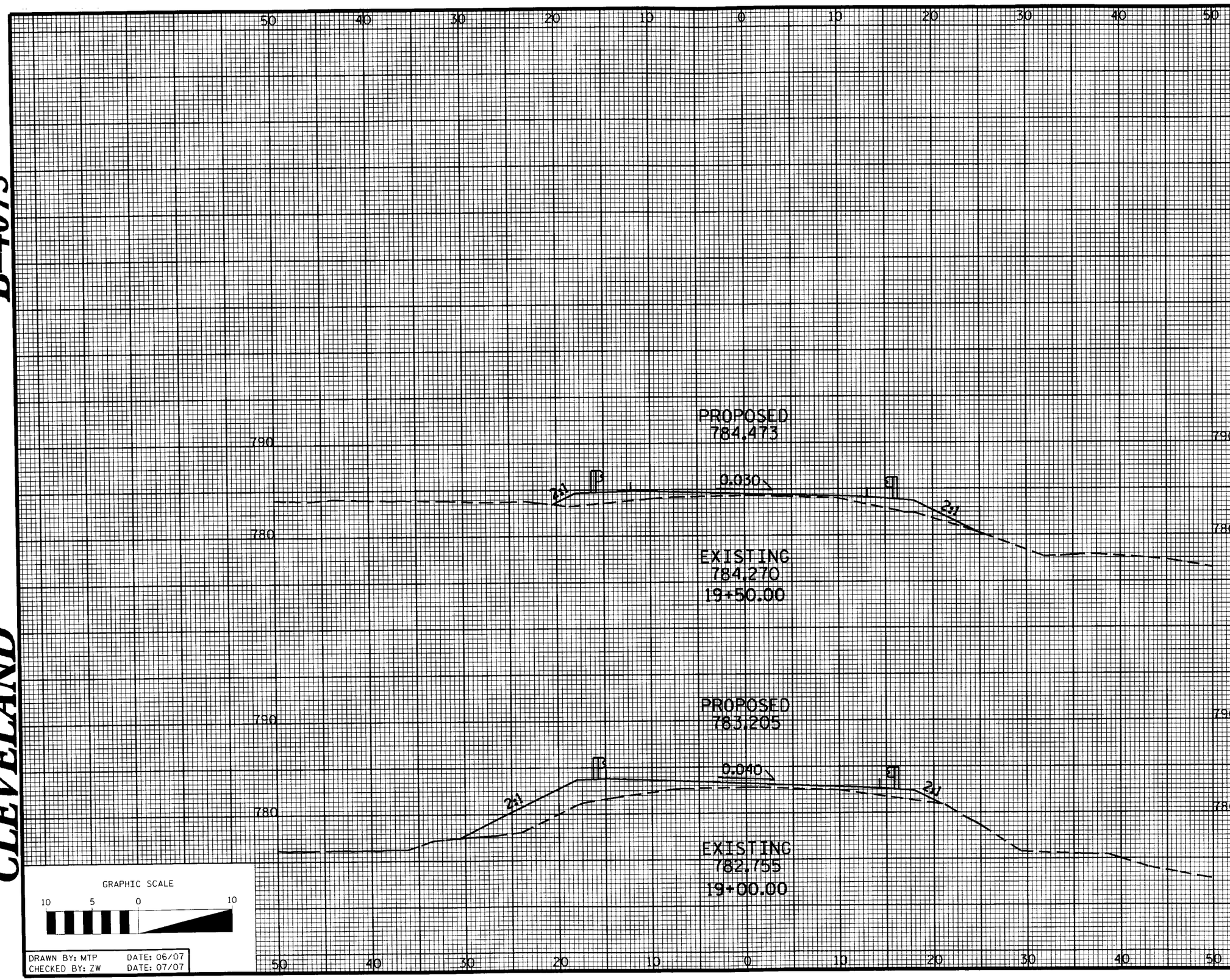

DRAWN BY: MTP DATE: 06/07
CHECKED BY: ZW DATE: 07/07

PROJECT NO. 33437
COUNTY: CLEVELAND
STATION: 17+98.00
REPLACES BRIDGE NO. 129

STATE OF NORTH CAROLINA
DEPARTMENT OF TRANSPORTATION
RALEIGH

PROPOSED
CROSS SECTIONS

REVISIONS						SHEET NO.
NO.	BY	DATE	NO.	BY	DATE	22
1			3			TOTAL SHEETS
2			4			27

ssandor AT BGMU240326 29-SEP-2011 15:25

B-4075

CLEVELAND

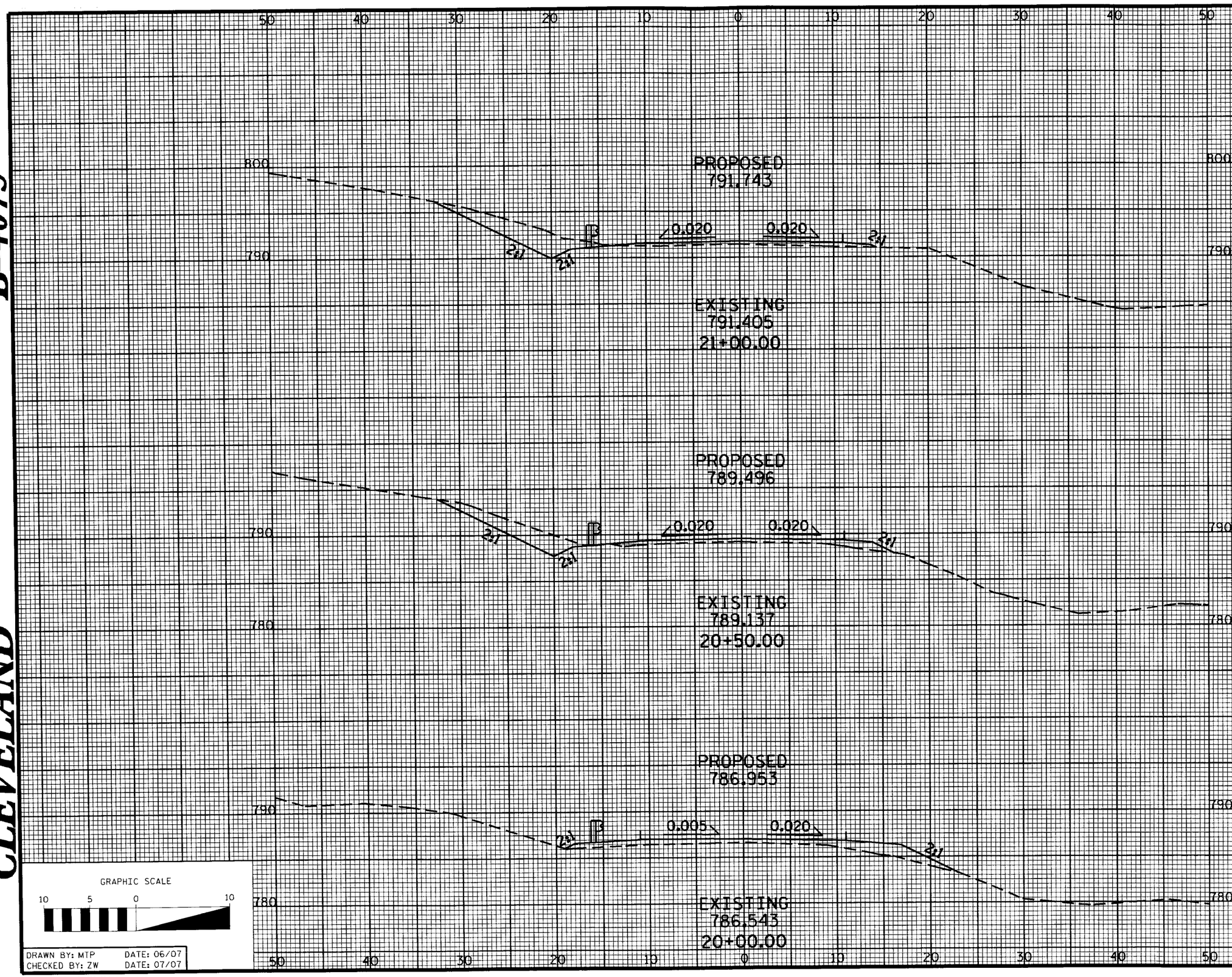

GRAPHIC SCALE

10 5 0 10

DRAWN BY: MTP DATE: 06/07
CHECKED BY: ZW DATE: 07/07

PROJECT NO. 33437
COUNTY: CLEVELAND
STATION: 17+98.00
REPLACES BRIDGE NO. 129

STATE OF NORTH CAROLINA
DEPARTMENT OF TRANSPORTATION
RALEIGH

PROPOSED
CROSS SECTIONS

REVISIONS						SHEET NO.
NO.	BY	DATE	NO.	BY	DATE	23
1			3			TOTAL SHEETS
2			4			27

ssandor AT BGMU240326 29-SEP-2011 15:27

B-4075

CLEVELAND

DRAWN BY: MTP DATE: 06/07
CHECKED BY: ZW DATE: 07/07

PROJECT NO. 33437
COUNTY: CLEVELAND
STATION: 17+98.00
REPLACES BRIDGE NO. 129

STATE OF NORTH CAROLINA
DEPARTMENT OF TRANSPORTATION
RALEIGH

PROPOSED
CROSS SECTIONS

REVISIONS						SHEET NO.
NO.	BY	DATE	NO.	BY	DATE	24
1			3			TOTAL SHEETS
2			4			27

ssandor AT BGMU240326 29-SEP-2011 15:28

B-4075

CLEVELAND

EROSION CONTROL PLAN

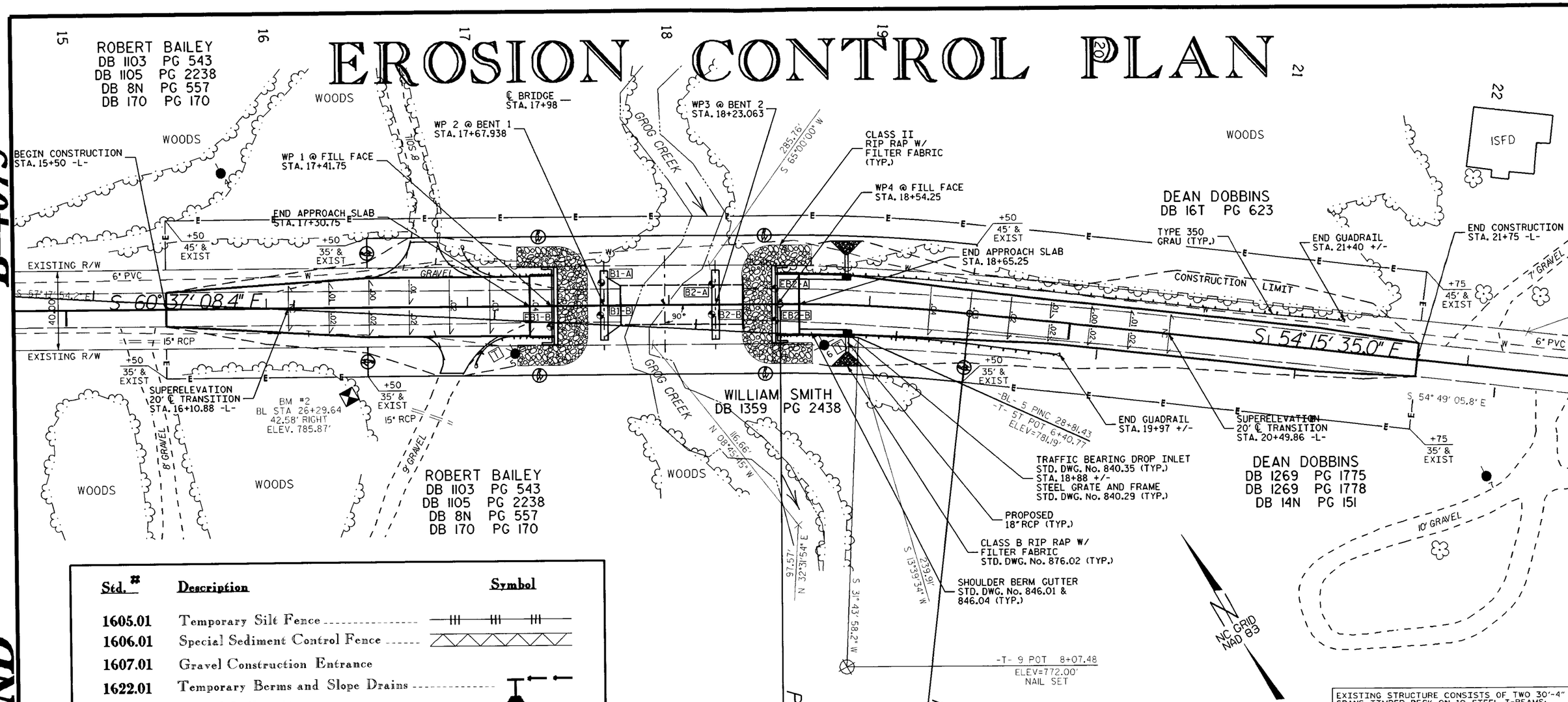

Std. #	Description	Symbol
1605.01	Temporary Silt Fence	
1606.01	Special Sediment Control Fence	
1607.01	Gravel Construction Entrance	
1622.01	Temporary Berms and Slope Drains	
1630.06	Special Stilling Basin	
1632.03	Rock Inlet Sediment Trap Type C	
1633.01	Temporary Rock Silt Check Type-A	
	Temporary Rock Silt Check Type-A with Matting and Polyacrylamide (PAM)	

ROADSIDE ENVIRONMENTAL UNIT
DEPARTMENT OF TRANSPORTATION
DIVISION OF HIGHWAYS
RALEIGH, N.C.

2006 STANDARD SPECIFICATIONS

NOTES: ANY DEVIATION FROM OPTIONS GIVEN WILL REQUIRE PRIOR APPROVAL BY ENGINEER.

ADDITIONAL EROSION CONTROL DEVICES MAY NEED TO BE INSTALLED AS DIRECTED BY THE ENGINEER.

DATUM DESCRIPTION

THE LOCALIZED COORDINATE SYSTEM DEVELOPED FOR THIS PROJECT IS BASED ON THE STATE PLANE COORDINATES ESTABLISHED BY NCDOT FOR MONUMENT "B-4075-2" WITH NAD 83 STATE PLANE GRID COORDINATES OF NORTHING: 560991.2600(ft) EASTING: 1186163.2118(ft) THE AVERAGE COMBINED GRID FACTOR USED ON THIS PROJECT (GROUND TO GRID) IS: 0.999883535 THE N.C. LAMBERT GRID BEARING AND LOCALIZED HORIZONTAL GROUND DISTANCE FROM "B-4075-2" TO -L- STATION IS

ALL LINEAR DIMENSIONS ARE LOCALIZED HORIZONTAL DISTANCES
VERTICAL DATUM USED IS NAVD 88

GRAPHIC SCALE

50 25 0 50 100

EXISTING STRUCTURE CONSISTS OF TWO 30'-4" SPANS; TIMBER DECK ON 10 STEEL I-BEAMS; TIMBER CAP ON MASS CONCRETE ABUTMENTS; INTERIOR BENT IS TIMBER CAP, POSTS, AND SILL ON CONCRETE FOOTING; 19'-2" CLEAR ROADWAY AND OVERALL LENGTH = 61 FEET.

PROJECT NO. 33437
COUNTY: CLEVELAND
STATION: 17+98.00
REPLACES BRIDGE NO. 129

STATE OF NORTH CAROLINA
DEPARTMENT OF TRANSPORTATION
RALEIGH

BRIDGE #129 ON SR 1184
OVER
GROG CREEK

REVISIONS						SHEET NO.
NO.	BY	DATE	NO.	BY	DATE	25
1			3			TOTAL SHEETS
2			4			27

SSCNCDOT AT 8G4L240326-OCT-2016n8

TEMPORARY ROCK SILT CHECK TYPE 'A' WITH EXCELSIOR MATTING AND POLYACRYLAMIDE (PAM)

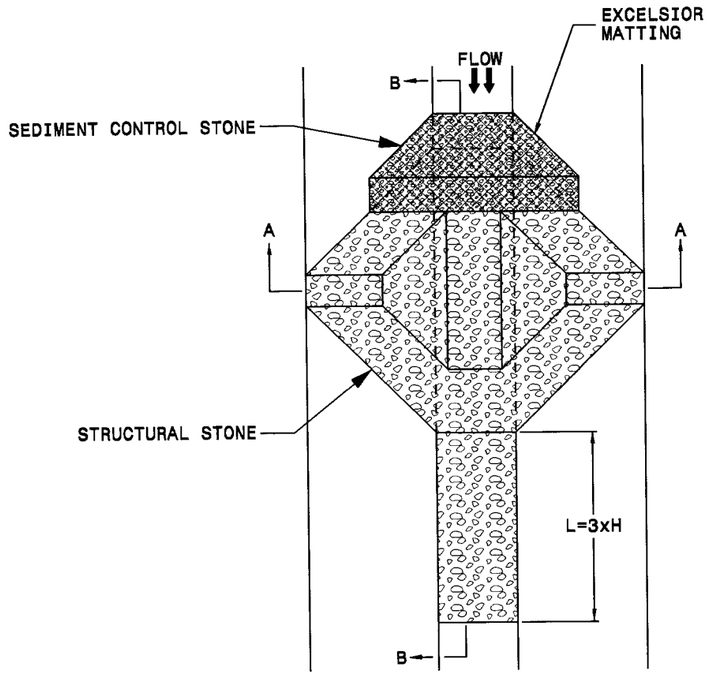

PLAN

NOTES

USE EXCELSIOR FOR MATTING MATERIAL AND ANCHOR MATTING SECTION AT TOP AND BOTTOM WITH CLASS B STONE.

PRIOR TO POLYACRYLAMIDE (PAM) APPLICATION, OBTAIN A SOIL SAMPLE FROM PROJECT LOCATION, AND FROM OFFSITE MATERIAL, AND ANALYZE FOR APPROPRIATE PAM FLOCCULANT TO BE APPLIED TO EACH ROCK SILT CHECK.

INITIALLY APPLY 3.5 OUNCES OF POLYACRYLAMIDE (PAM) TO TOP OF MATTING SECTION AND AFTER EVERY RAINFALL EVENT THAT EQUALS OR EXCEEDS 0.50 INCHES.

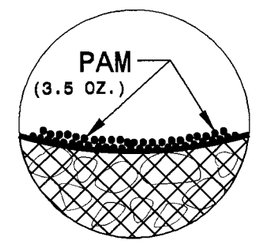

INSET A

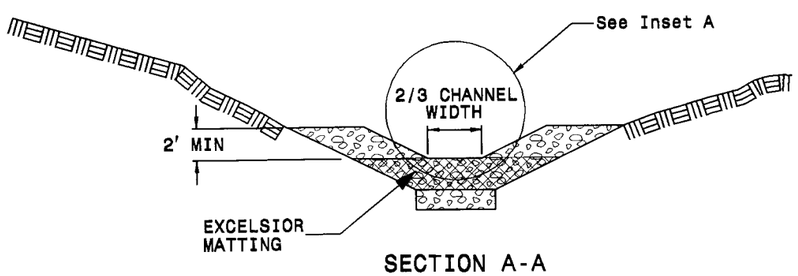

SECTION A-A

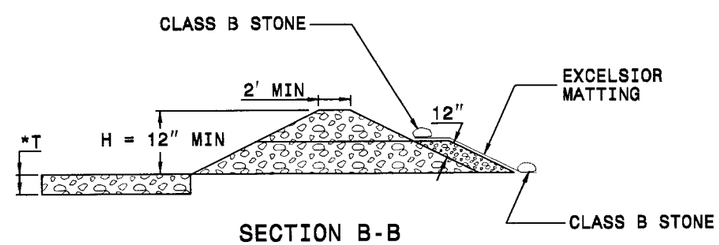

SECTION B-B

*T = 12" MIN., 18" MAX.

NOT TO SCALE

ROADSIDE ENVIRONMENTAL UNIT
DEPARTMENT OF TRANSPORTATION
DIVISION OF HIGHWAYS
RALEIGH, N.C.

2006 STANDARD SPECIFICATIONS

NOTES: ANY DEVIATION FROM OPTIONS GIVEN WILL REQUIRE PRIOR APPROVAL BY ENGINEER.

ADDITIONAL EROSION CONTROL DEVICES MAY NEED TO BE INSTALLED AS DIRECTED BY THE ENGINEER.

PROJECT NO. 33437
COUNTY: CLEVELAND
STATION: 17+98.00
REPLACES BRIDGE NO. 129

STATE OF NORTH CAROLINA
DEPARTMENT OF TRANSPORTATION
RALEIGH

BRIDGE #129 ON SR 1184
OVER
GROG CREEK

REVISIONS						SHEET NO.
NO.	BY	DATE	NO.	BY	DATE	26
1			3			TOTAL SHEETS
2			4			27

MATTING INSTALLATION DETAIL

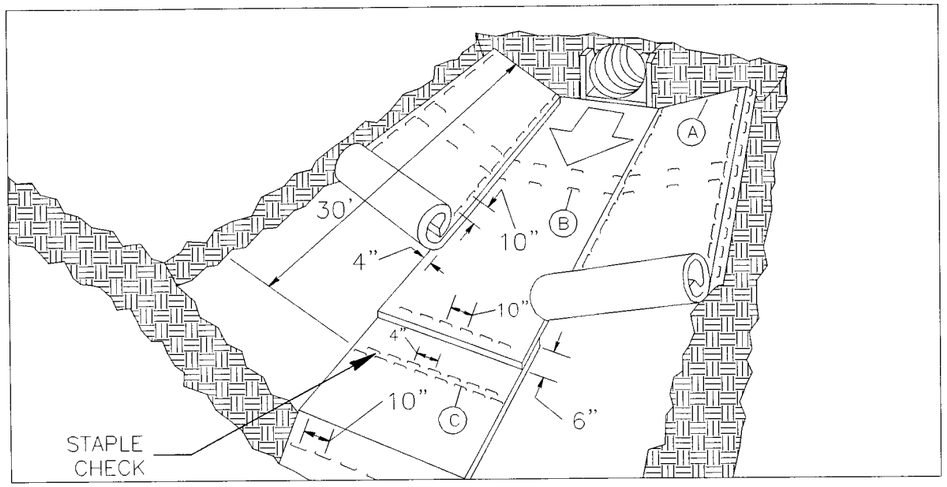

MATTING IN DITCHES

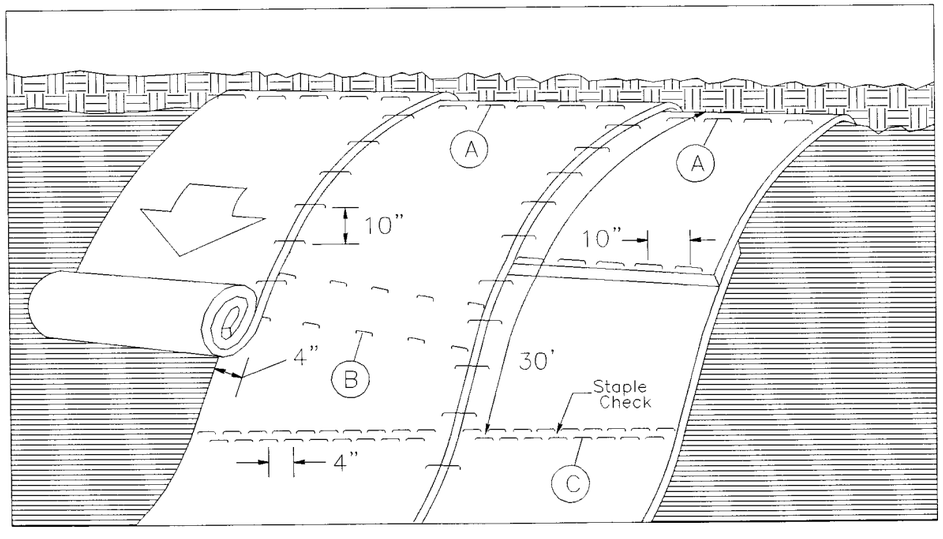

MATTING ON SLOPES

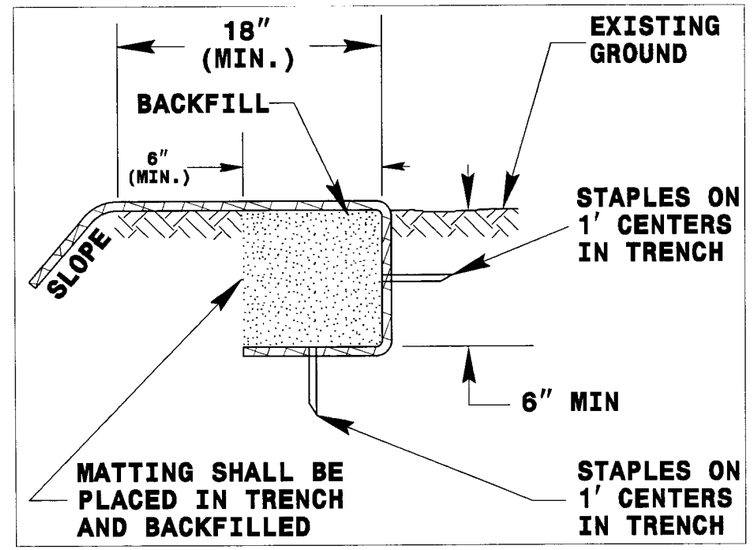

DIAGRAM (A)

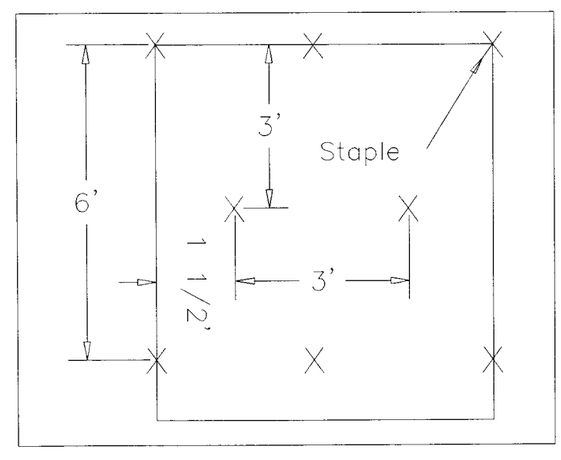

DIAGRAM (B)

Staple Check Pattern

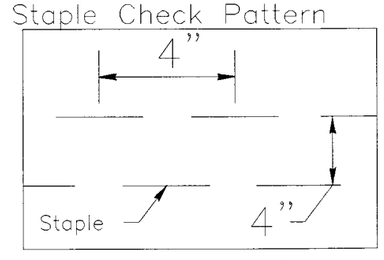

DIAGRAM (C)

PROJECT NO. 33437
COUNTY: CLEVELAND
STATION: 17+98.00
REPLACES BRIDGE NO. 129

STATE OF NORTH CAROLINA
DEPARTMENT OF TRANSPORTATION

BRIDGE #129 ON SR 1184
OVER
GROG CREEK

REVISIONS						SHEET NO.
NO.	BY	DATE	NO.	BY	DATE	27
1			3			TOTAL SHEETS
2			4			27

ROADSIDE ENVIRONMENTAL UNIT
DEPARTMENT OF TRANSPORTATION
DIVISION OF HIGHWAYS
RALEIGH, N.C.

2006 STANDARD SPECIFICATIONS

NOTES: ANY DEVIATION FROM OPTIONS GIVEN WILL REQUIRE PRIOR APPROVAL BY ENGINEER.

ADDITIONAL EROSION CONTROL DEVICES MAY NEED TO BE INSTALLED AS DIRECTED BY THE ENGINEER.

NOTES:

THIS DETAIL APPLIES TO STRAW, EXCELSIOR, AND PERMANENT SOIL REINFORCEMENT MAT (PSRM) INSTALLATION.

STAPLES SHALL BE NO. 11 GAUGE STEEL WIRE FORMED INTO A "U" SHAPE WITH A MINIMUM THROAT WIDTH OF 1 INCH AND NOT LESS THAN 6 INCHES IN LENGTH.