CONTRACT PROJECT NO: BK-5125

STATE	STATE PROJECT REFERENCE NO.	SHEET NO.	TOTAL SHEETS
N.C.	BK-5125		

STATE PROJ. NO.	F.A. PROJ. NO.	DESCRIPTION
		CONST.

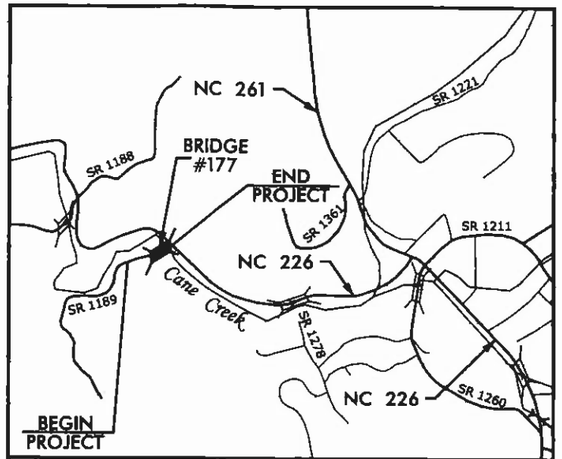

VICINITY MAP

STATE OF NORTH CAROLINA

DIVISION OF HIGHWAYS

MITCHELL COUNTY

LOCATION: BRIDGE NO. 177 ON SR 1189 OVER CANE CREEK
TYPE OF WORK: GRADING, DRAINAGE, PAVING, STRUCTURE, GUARDRAIL AND SIGNING

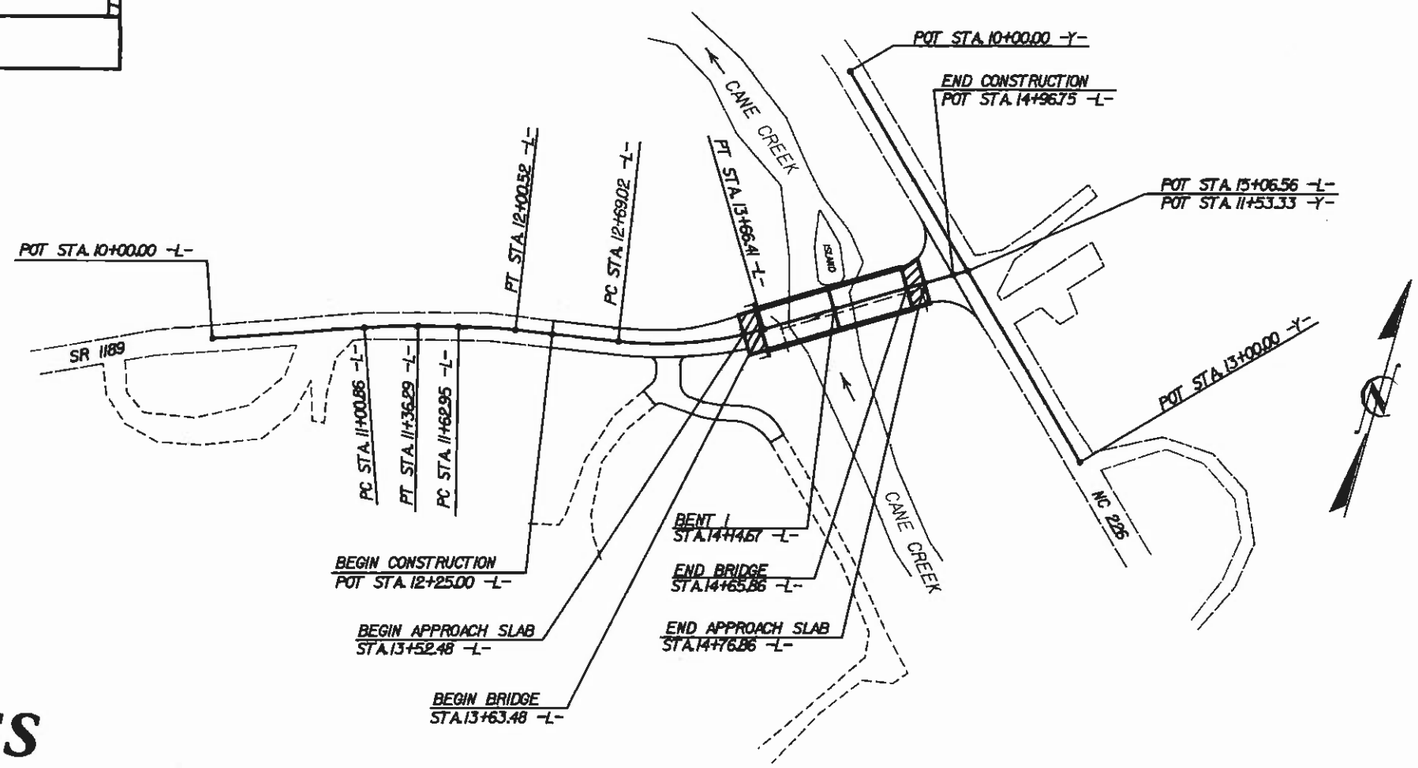

STRUCTURES

PROJECT LENGTH

LENGTH ROADWAY	=	0.032 MI
LENGTH STRUCTURE	=	0.019 MI
TOTAL LENGTH OF STATE PROJECT	=	0.051 MI

Prepared In the Office of:

FLORENCE & HUTCHESON
5121 KINGDOM WAY, SUITE 100
RALEIGH NC 27607
NC License No: F-0258

2006 STANDARD SPECIFICATIONS

PROJECT ENGINEER

NORTH CAROLINA PROFESSIONAL SEAL 20532 ENGINEER JAMES E. MONDOLFI

James E. Mondolfi SIGNATURE P.E. 10-4-10

PROJECT DESIGN ENGINEER

NORTH CAROLINA PROFESSIONAL SEAL 036214 ENGINEER KAREN M. MOBLEY

Karen M. Mobley SIGNATURE P.E. 10-4-10

TIP PROJ. NO. BK-5125

177 MITCHELL COUNTY

B.M. #2 - EXISTING NAIL IN POWER POLE (SET BY NCDOT) 42.46' RT OF STA. 12+99.73 -L- ELEV. 2429.10 (SURVEY).

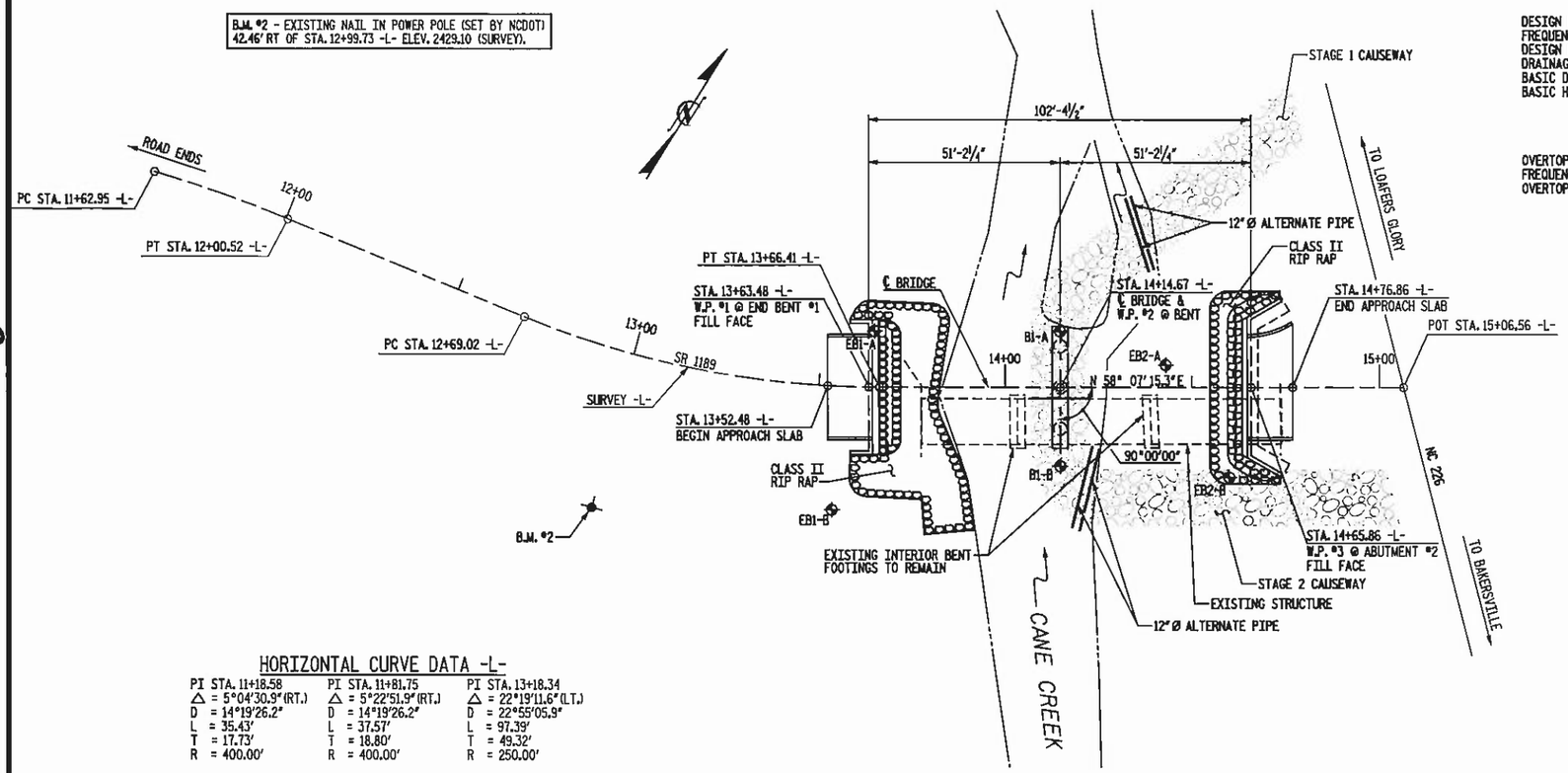

PLAN

SCALE: 1" = 20'-0"

HYDRAULIC DATA

DESIGN DISCHARGE	=	3000	CFS
FREQUENCY OF DESIGN FLOOD	=	5	YRS
DESIGN HIGH WATER ELEVATION	=	2428.50	FT
DRAINAGE AREA	=	540	SQ FT
BASIC DISCHARGE (Q_{100})	=	7390	CFS
BASIC HIGH WATER ELEVATION	=	2431.98	FT

OVERTOPPING FLOOD DATA

OVERTOPPING DISCHARGE	=	2900	CFS
FREQUENCY OF OVERTOPPING FLOOD	=	5	YRS
OVERTOPPING FLOOD ELEVATION	=	2428.31	FT

HORIZONTAL CURVE DATA -L-

PI STA. 11+18.58	PI STA. 11+81.75	PI STA. 13+18.34
△ = 5°04'30.9" (RT.)	△ = 5°22'51.9" (RT.)	△ = 22°19'11.6" (LT.)
D = 14°19'26.2"	D = 14°19'26.2"	D = 22°55'05.9"
L = 35.43'	L = 37.57'	L = 97.39'
T = 17.73'	T = 18.80'	T = 49.32'
R = 400.00'	R = 400.00'	R = 250.00'

GRADE DATA

+ 1.5840% △ +4.9500%

P.I. 12+50.00
EL. 2425.08
L = 50'

GRADE DATA

+4.9500% △ +0.5000%

P.I. 13+50.00
EL. 2430.03
L = 50'

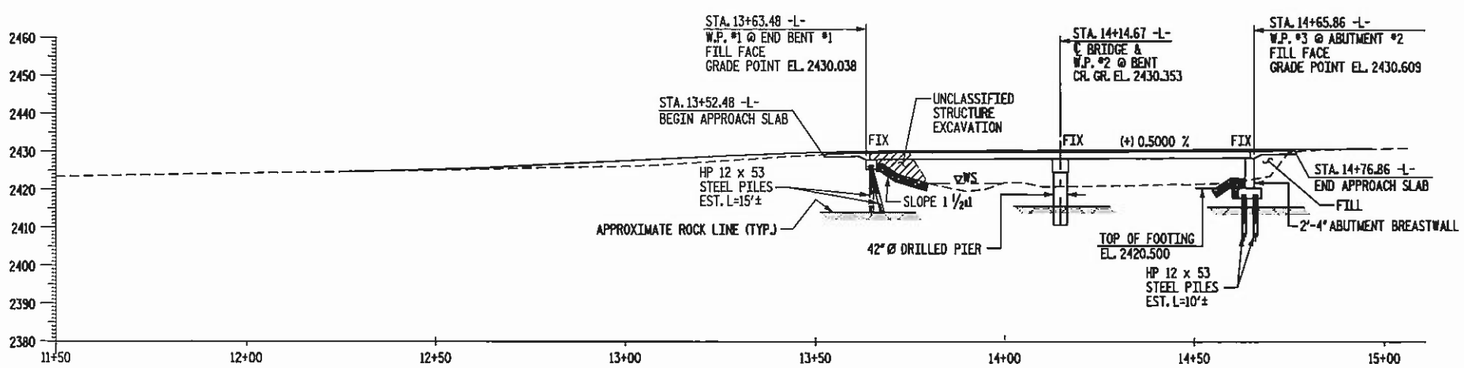

PROFILE ALONG ℄ SURVEY

SCALE: 1" = 20'-0"

NOTES

1. THE QUANTITY OF RIP RAP TO BE PAID FOR WILL BE THE ACTUAL NUMBER OF TONS OF EACH CLASS OF RIP RAP WHICH HAS BEEN INCORPORATED INTO THE COMPLETED AND ACCEPTED WORK. THE RIP RAP WILL BE MEASURED BY BEING WEIGHED IN TRUCKS ON CERTIFIED PLATFORM SCALES OR OTHER CERTIFIED WEIGHING DEVICES. THE QUANTITY OF RIP RAP WILL BE PAID FOR AT THE CONTRACT UNIT PRICE PER TON:

PLAIN RIP RAP CLASS II (2'-0" THICK)		FILTER FABRIC
END BENT NO. 1	170 TONS	160 SQUARE YARDS
ABUTMENT NO. 2	120 TONS	120 SQUARE YARDS
TOTAL	290 TONS	280 SQUARE YARDS

2. THIS STRUCTURE HAS BEEN DESIGNED IN ACCORDANCE WITH FHWA'S TECHNICAL ADVISORY T5140.20 (SCOUR AT BRIDGES).
3. THE CONTRACTOR MAY BEGIN THE REINFORCEMENT BRIDGE APPROACH FILL CONSTRUCTION AFTER COMPLETION OF END BENT NO. 1 AND ABUTMENT NO. 2. NO OTHER WAITING PERIOD WILL BE REQUIRED FOR THE APPROACH SLAB CONSTRUCTION AT END BENT NO. 1 AND ABUTMENT NO. 2.
4. FOR STEEL PILES, SEE SPECIAL PROVISIONS.
5. PILES AT END BENT NO. 1 ARE DESIGNED FOR A FACTORED RESISTANCE OF 55 TONS PER PILE.
6. DRIVE PILES AT END BENT NO. 1 TO A REQUIRED DRIVING RESISTANCE OF 92 TONS PER PILE.
7. STEEL PILE POINTS ARE REQUIRED FOR PILES AT END BENT NO. 1. SEE SPECIAL PROVISIONS FOR STEEL PILE POINTS.
8. FOR DRILLED PIERS, SEE SPECIAL PROVISIONS.
9. DRILLED PIERS AT BENT ARE DESIGNED FOR A FACTORED RESISTANCE OF 250 TONS PER PIER. CHECK FIELD CONDITIONS FOR THE REQUIRED TIP RESISTANCE OF 30 TSF.
10. PERMANENT STEEL CASING IS REQUIRED FOR DRILLED PIERS AT BENT. IF REQUIRED, DO NOT EXTEND PERMANENT CASINGS BELOW ELEVATION 2415.500 FT WITHOUT PRIOR APPROVAL FROM THE ENGINEER.
11. INSTALL DRILLED PIERS AT BENT THAT EXTEND TO AN ELEVATION NO HIGHER THAN 2407.000 FT (LT), 2410.000 FT (RT) AND SATISFY THE REQUIRED END RESISTANCE.
12. THE SCOUR CRITICAL ELEVATION FOR BENT IS ELEVATION 2414.000 FT. THE SCOUR CRITICAL ELEVATIONS ARE USED TO MONITOR POSSIBLE SCOUR PROBLEMS DURING THE LIFE OF THE STRUCTURE.
13. CSL TUBES ARE REQUIRED AND CSL TESTING MAY BE REQUIRED FOR THE DRILLED PIERS. THE ENGINEER WILL DETERMINE THE NEED FOR CSL TESTING. SEE CROSSHOLE SONIC LOGGING SPECIAL PROVISION.
14. PILE EXCAVATION IS REQUIRED TO INSTALL PILES AT ABUTMENT NO. 2. EXCAVATE HOLES AT PILE LOCATIONS TO ELEVATION 2407.000 FT. FOR PILE EXCAVATION, SEE SPECIAL PROVISION.
15. PILES AT ABUTMENT NO. 2 ARE DESIGNED FOR A FACTORED RESISTANCE OF 90 TONS PER PILE.
16. AT ABUTMENT NO. 2, FILL HOLES WITH CLASS A CONCRETE AFTER PLACING PILES IN HOLES.
17. AT EACH PILE LOCATION AT ABUTMENT NO. 2, THE PILE SHOULD EXTEND 3.5 FT INTO ROCK.
18. WHEN DRIVING PILES, THE MAXIMUM BLOW COUNT SHALL NOT BE EXCEEDED.
19. THE STEEL PILES SHALL BE GALVANIZED IN ACCORDANCE WITH SECTION 1076 OF THE STANDARD SPECIFICATIONS. FOR GALVANIZING STEEL PILES, SEE SPECIAL PROVISIONS.
20. DELINEATORS ON BARRIER RAIL SHALL BE INCLUDED IN THE UNIT PRICE BID.
21. FOR CRANE SAFETY, SEE SPECIAL PROVISIONS.
22. FOR FALSEWORK AND FORMWORK, SEE SPECIAL PROVISIONS.

◆ GEOTECH BORE HOLES LOCATION

PROJECT NO. 42576
COUNTY: MITCHELL
STATION: 14+14.67
REPLACES BRIDGE NO. 177

DESCRIPTION OF EXISTING BRIDGE

1 SPAN @ 25'-4", 1 SPAN @ 35'-0" AND 1 SPAN @ 35'-5" 3" x 4" TIMBER FLOOR / 3.5" ASPHALT WEARING SURFACE ON I-BEAMS; END BENTS AND INTERIOR BENTS ON TIMBER POST AND CONCRETE SILLS; 11'-1" CLEAR ROADWAY WIDTH SHALL BE REMOVED.

STATE OF NORTH CAROLINA
DEPARTMENT OF TRANSPORTATION
RALEIGH

BRIDGE NO. 177 ON SR 1189
OVER CANE CREEK

Florence & Hutcheson
CONSULTING ENGINEERS
5121 Kingdom Way, Suite 100 Raleigh, NC 27607
NC License No: F-0258

NORTH CAROLINA PROFESSIONAL SEAL ENGINEER KAREN M. MOBLEY
10-4-10

REVISIONS						SHEET NO. 1
NO.	BY	DATE	NO.	BY	DATE	TOTAL SHEETS 31
1			3			
2			4			

DRAWN BY: D.H. CARTER DATE: SEPT. 2010
CHECKED BY: K.M. MOBLEY DATE: SEPT. 2010

LOAD AND RESISTANCE FACTOR RATING (LRFR) SUMMARY FOR PRESTRESSED CONCRETE GIRDERS

LEVEL		VEHICLE	WEIGHT (W) (TONS)	CONTROLLING LOAD RATING (#)	MINIMUM RATING FACTORS (RF)	TONS = W x RF	STRENGTH I LIMIT STATE											SERVICE III LIMIT STATE						COMMENT NUMBER
								MOMENT					SHEAR						MOMENT					
							LIVE-LOAD FACTORS (γ_{LL})	DISTRIBUTION FACTORS (DF)	RATING FACTOR	SPAN	GIRDER LOCATION	DISTANCE FROM LEFT END OF SPAN (FT)	DISTRIBUTION FACTORS (DF)	RATING FACTOR	SPAN	GIRDER LOCATION	DISTANCE FROM LEFT END OF SPAN (FT)	LIVE-LOAD FACTORS (γ_{LL})	DISTRIBUTION FACTORS (DF)	RATING FACTOR	SPAN	GIRDER LOCATION	DISTANCE FROM LEFT END OF SPAN (FT)	
DESIGN LOAD RATING		HL-93 (INVENTORY)	N/A	1	1.21	--	1.75	0.264	1.35	A	I	24.5	0.60	1.21	A	I	4.5	0.80	0.264	1.79	A	I	24.5	1
		HL-93 (OPERATING)	N/A		1.57	--	1.35	0.264	1.75	A	I	24.5	0.60	1.57	A	I	4.5	N/A	--	--	--	--	--	1, 2
		HS-20 (INVENTORY)	36.000	2	1.58	56.9	1.75	0.264	1.68	A	I	24.5	0.60	1.58	A	I	4.5	0.80	0.264	2.22	A	I	24.5	1
		HS-20 (OPERATING)	36.000		2.05	73.8	1.35	0.264	2.17	A	I	24.5	0.60	2.05	A	I	4.5	N/A	--	--	--	--	--	1, 2
LEGAL LOAD RATING	SINGLE VEHICLE (SV)	SNSH	13.500		4.26	57.5	1.40	0.264	4.26	A	I	24.5	0.60	5.09	A	I	4.5	0.80	0.264	4.53	A	I	24.5	1
		SNGARBS2	20.000		3.37	67.4	1.40	0.264	3.37	A	I	24.5	0.60	3.67	A	I	44.5	0.80	0.264	3.57	A	I	24.5	1
		SNAGRIS2	22.000		3.27	71.9	1.40	0.264	3.27	A	I	19.5	0.60	3.44	A	I	44.5	0.80	0.264	3.48	A	I	24.5	1
		SNCOTTS3	27.250		2.13	58.0	1.40	0.264	2.13	A	I	24.5	0.60	2.32	A	I	4.5	0.80	0.264	2.26	A	I	24.5	1
		SNAGGRS4	34.925		1.85	64.6	1.40	0.264	1.85	A	I	24.5	0.60	1.86	A	I	44.5	0.80	0.264	1.96	A	I	24.5	1
		SNS5A	35.550		1.80	64.0	1.40	0.264	1.80	A	I	24.5	0.60	1.95	A	I	4.5	0.80	0.264	1.91	A	I	24.5	1
		SNS6A	39.950		1.69	67.5	1.40	0.264	1.69	A	I	24.5	0.60	1.73	A	I	44.5	0.80	0.264	1.79	A	I	24.5	1
		SNS7B	42.000		1.61	67.6	1.40	0.264	1.61	A	I	24.5	0.60	1.70	A	I	4.5	0.80	0.264	1.71	A	I	24.5	1
	TRUCK TRACTOR SEMI-TRAILER (TTST)	TNAGRIT3	33.000		2.07	68.3	1.40	0.264	2.07	A	I	24.5	0.60	2.23	A	I	4.5	0.80	0.264	2.19	A	I	24.5	1
		TNT4A	33.075		2.08	68.8	1.40	0.264	2.08	A	I	24.5	0.60	2.10	A	I	4.5	0.80	0.264	2.21	A	I	24.5	1
		TNT6A	41.600		1.74	72.4	1.40	0.264	1.74	A	I	24.5	0.60	2.00	A	I	4.5	0.80	0.264	1.84	A	I	24.5	1
		TNT7A	42.000		1.76	73.9	1.40	0.264	1.76	A	I	24.5	0.60	1.77	A	I	44.5	0.80	0.264	1.87	A	I	24.5	1
		TNT7B	42.000		1.63	68.5	1.40	0.264	1.84	A	I	24.5	0.60	1.63	A	I	44.5	0.80	0.264	1.95	A	I	24.5	1
		TNAGRIT4	43.000		1.54	66.2	1.40	0.264	1.74	A	I	24.5	0.60	1.54	A	I	4.5	0.80	0.264	1.85	A	I	24.5	1
		TNAGT5A	45.000		1.59	71.6	1.40	0.264	1.63	A	I	24.5	0.60	1.59	A	I	4.5	0.80	0.264	1.73	A	I	24.5	1
		TNAGT5B	45.000	3	1.43	64.4	1.40	0.264	1.59	A	I	24.5	0.60	1.43	A	I	44.5	0.80	0.264	1.69	A	I	24.5	1

LOAD FACTORS:

DESIGN LOAD RATING FACTORS	LIMIT STATE	γ_{DC}	γ_{DW}
	STRENGTH I	1.25	1.50
	SERVICE III	1.00	1.00

NOTES:

MINIMUM RATING FACTORS ARE BASED ON THE STRENGTH I AND SERVICE III LIMIT STATES.

ALLOWABLE STRESSES FOR SERVICE III LIMIT STATE ARE AS REQUIRED FOR DESIGN.

COMMENTS:

1. ALL DISTANCES ARE MEASURED FROM THE CENTERLINE OF BEARINGS.
2. SERVICE III LIMIT STATE IS NOT APPLICABLE AT OPERATING LEVEL.

(#) CONTROLLING LOAD RATING

(1) DESIGN LOAD RATING (HL-93)

(2) DESIGN LOAD RATING (HS-20)

(3) LEGAL LOAD RATING **

** SEE CHART FOR VEHICLE TYPE

GIRDER LOCATION

I - INTERIOR GIRDER
EL - EXTERIOR LEFT GIRDER
ER - EXTERIOR RIGHT GIRDER

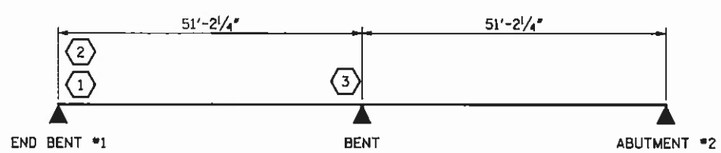

LRFR SUMMARY

PROJECT NO. 42576
COUNTY: MITCHELL
STATION: 14+14.67
REPLACES BRIDGE NO. 177

STATE OF NORTH CAROLINA
DEPARTMENT OF TRANSPORTATION
RALEIGH
STANDARD
LRFR SUMMARY FOR PRESTRESSED CORED SLAB UNITS

Florence & Hutcheson
CONSULTING ENGINEERS
5121 Kingdom Way, Suite 100 Raleigh, NC 27607
NC License No: F-0258

NORTH CAROLINA PROFESSIONAL SEAL ENGINEER KAREN M. MOBLEY
10-4-10

REVISIONS						SHEET NO. 2
NO.	BY	DATE	NO.	BY	DATE	TOTAL SHEETS 31
1			3			
2			4			

DRAWN BY: K.M. MOBLEY DATE: SEPT. 2010
CHECKED BY: K.M. MOBLEY DATE: SEPT. 2010

NOT TO SCALE

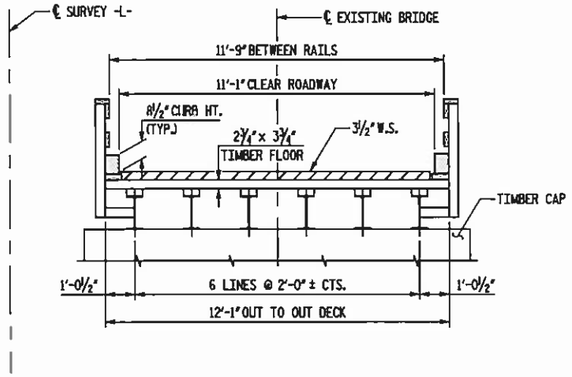

EXISTING BRIDGE SECTION

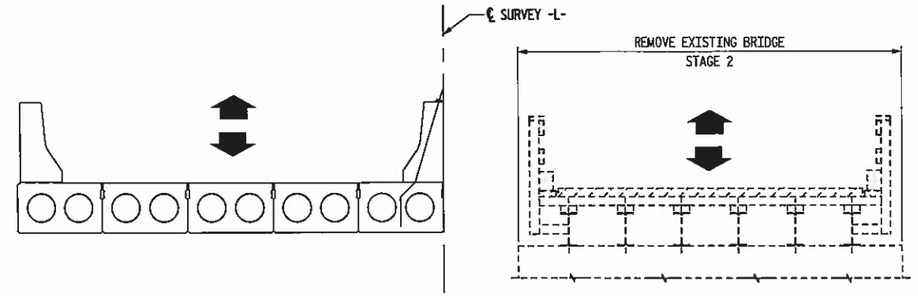

STAGE 2

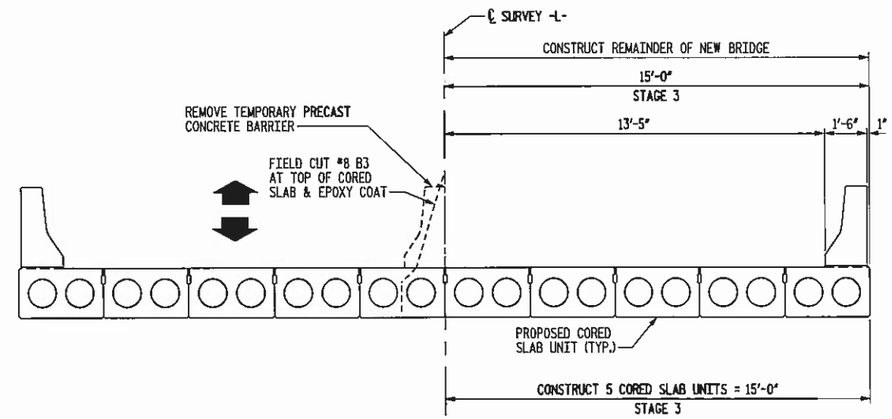

STAGE 3

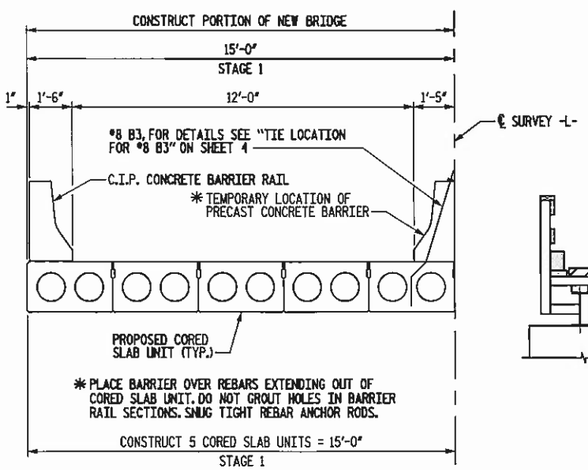

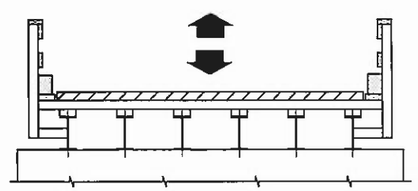

STAGE 1

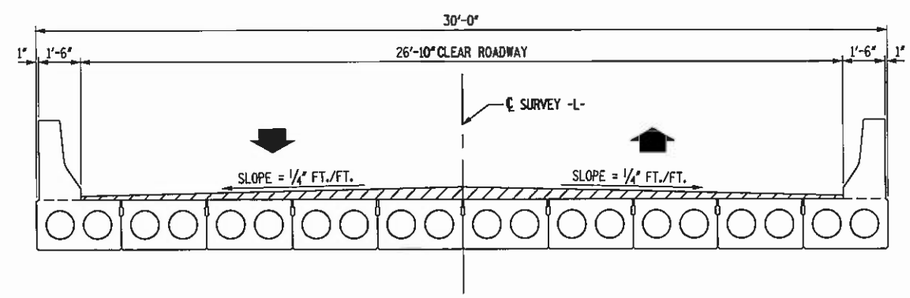

STAGE 4

NOTES

STAGE 1:

1. CONSTRUCT PORTION OF NEW END BENT, ABUTMENT, INTERIOR BENT AND WEST FASCIA WINGS.
2. INSTALL FIVE CORED SLAB UNITS AND PERMANENT CAST-IN-PLACE CONCRETE BARRIER RAIL.
3. INSTALL TEMPORARY PRECAST CONCRETE BARRIER RAIL.
4. MOVE TRAFFIC TO CONSTRUCTED PORTION OF NEW BRIDGE.

STAGE 2:

1. REMOVE EXISTING BRIDGE.

STAGE 3:

1. CONSTRUCT REMAINDER OF NEW END BENT, ABUTMENT, INTERIOR BENT AND EAST FASCIA WINGS.
2. INSTALL REMAINING CORED SLAB UNITS.
3. REMOVE TEMPORARY PRECAST CONCRETE BARRIER RAIL AND FIELD CUT #8 B3 BARS.
4. INSTALL REMAINING CONCRETE BARRIER RAIL.

STAGE 4:

1. INSTALL ASPHALT WEARING SURFACE.

NOT TO SCALE

PROJECT NO. 42576
COUNTY: MITCHELL
STATION: 14+14.67
REPLACES BRIDGE NO. 177

STATE OF NORTH CAROLINA
DEPARTMENT OF TRANSPORTATION
RALEIGH

CONSTRUCTION STAGING LAYOUT

Florence & Hutcheson
CONSULTING ENGINEERS
5121 Kingdom Way, Suite 100 Raleigh, NC 27607
NC License No: F-0268

NORTH CAROLINA PROFESSIONAL SEAL ENGINEER KAREN M. MOBLEY
10-4-10

REVISIONS						SHEET NO.
NO.	BY	DATE	NO.	BY	DATE	3
1			3			TOTAL SHEETS
2			4			31

DRAWN BY: D.H. CARTER DATE: SEPT. 2010
CHECKED BY: K.M. MOBLEY DATE: SEPT. 2010

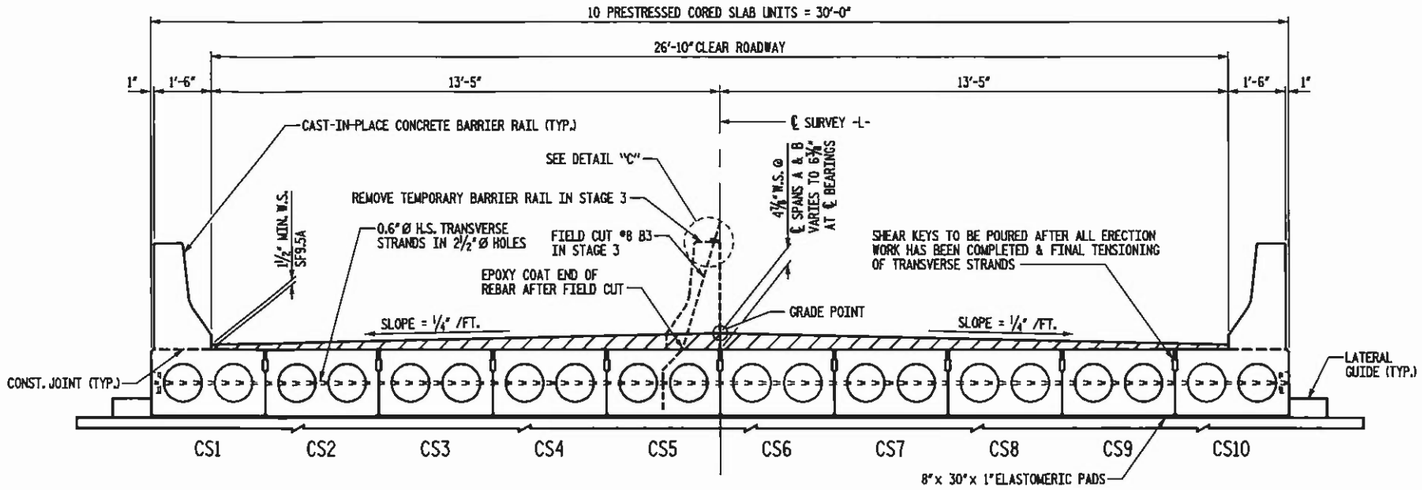

TYPICAL SECTION

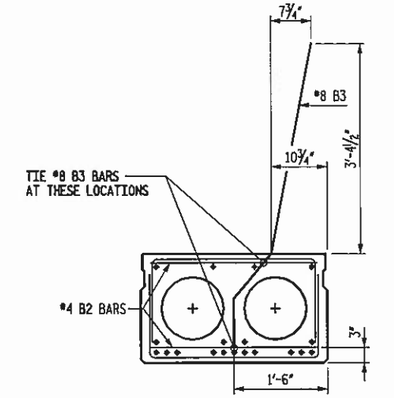

TIE LOCATION FOR #8 B3

GENERAL NOTES

ASSUMED LIVE LOAD = HL-93 OR ALTERNATE LOADING.

CONCRETE: $f'c$ = 5500 psi
*CONCRETE: $f'c_i$ = 4400 psi,

*COMPRESSIVE STRENGTH @ TRANSFER OF STRESSING FORCE.

ALL PRESTRESS STRANDS SHALL BE 7 WIRE, LOW RELAXATION, HIGH STRENGTH CABLES IN ACCORDANCE WITH THE SPECIFICATIONS.

SIZE TYPE	AREA
0.6" Ø L.R.	0.217□"

ULTIMATE STRENGTH	APPLIED FORCE
58,600# PER STRAND	43,950# PER STRAND

ALL MATERIAL AND WORKMANSHIP SHALL COMPLY WITH THE APPLICABLE REQUIREMENTS OF THE STANDARD SPECIFICATIONS FOR ROADS AND STRUCTURES OF THE NC DEPARTMENT OF TRANSPORTATION DATED JULY 2006 AND WITH THE SPECIAL PROVISIONS.

THE ULTIMATE STRENGTH OF THE CORED SLAB UNIT MUST MEET THE REQUIREMENTS OF THE APPLICABLE AASHTO SPECIFICATIONS.

UNLESS OTHERWISE NOTED ON THE PLANS, ALL EXPOSED CORNERS ON STRUCTURES SHALL BE CHAMFERED ¾".

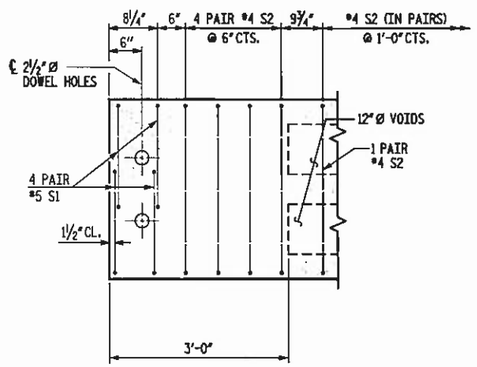

DETAIL "A"

INTERIOR CORED SLAB UNIT

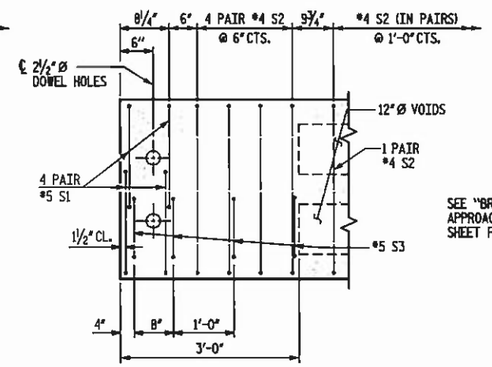

DETAIL "B"

EXTERIOR CORED SLAB UNIT

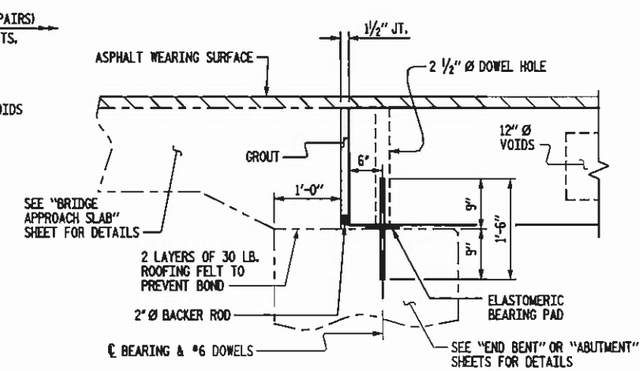

SECTION AT END BENT OR ABUTMENT

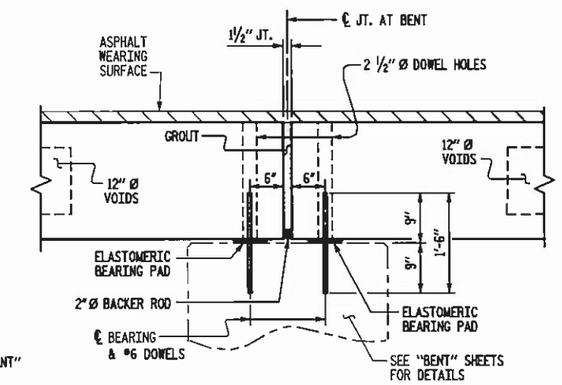

SECTION AT BENT

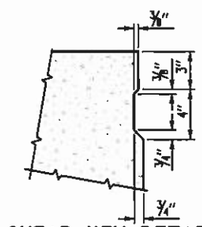

SHEAR KEY DETAIL

NOTE: OMIT SHEAR KEY ON OUTSIDE FACE OF EXTERIOR CORED SLABS.

SHEATH CHART	
SPAN LENGTH	NUMBER OF SHEATHED STRANDS PER SLAB SECTION
50'	*2 @ 2"

* BOND SHALL BE BROKEN ON THESE STRANDS FOR A DISTANCE OF 8 FEET FROM THE END OF THE SLAB

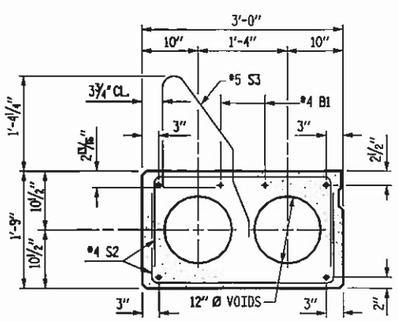

EXTERIOR SLAB SECTION

(FOR PRESTRESSED STRAND LAYOUT, SEE INTERIOR SLAB SECTIONS)

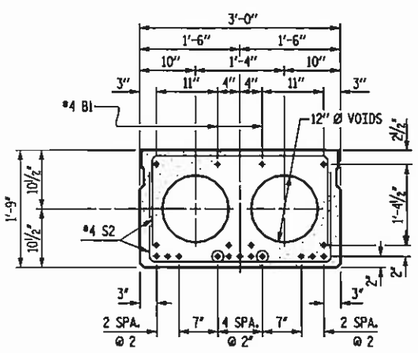

50' SPAN-INTERIOR SLAB SECTION

17 - 0.6" Ø L.R. STRANDS

⊙STRAND IS SHEATHED. SEE SHEATH CHART.

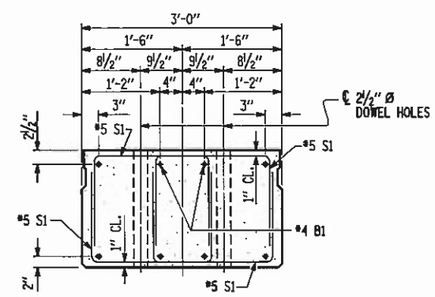

END ELEVATION

SHOWING PLACEMENT OF DOUBLE STIRRUPS AND LOCATION OF DOWEL HOLES. (STRAND LAYOUT NOT SHOWN.) INTERIOR SLAB SECTION SHOWN, EXTERIOR SLAB SECTION SIMILAR EXCEPT SHEAR KEY LOCATION.

THE 2½" DOWEL HOLES AT FIXED ENDS OF SLAB SECTIONS SHALL BE FILLED WITH GROUT.

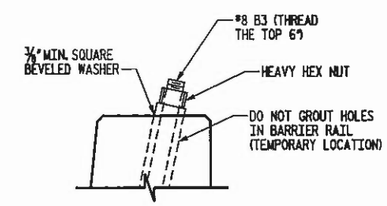

DETAIL "C"

PROJECT NO. 42576
COUNTY: MITCHELL
STATION: 14+14.67
REPLACES BRIDGE NO. 177

STATE OF NORTH CAROLINA
DEPARTMENT OF TRANSPORTATION
RALEIGH

3'-0" x 1'-9"
PRESTRESSED CORED SLAB UNIT
26'-10" CLEAR ROADWAY
90° SKEW

NOT TO SCALE

Florence & Hutcheson
CONSULTING ENGINEERS
5121 Kingdom Way, Suite 100 Raleigh, NC 27607
NC License No: F-0258

NORTH CAROLINA PROFESSIONAL SEAL ENGINEER KAREN M. MOBLEY
10-4-10

REVISIONS						SHEET NO.
NO.	BY	DATE	NO.	BY	DATE	4
1			3			TOTAL SHEETS
2			4			31

DRAWN BY: D.H. CARTER DATE: SEPT. 2010
CHECKED BY: K.M. MOBLEY DATE: SEPT. 2010

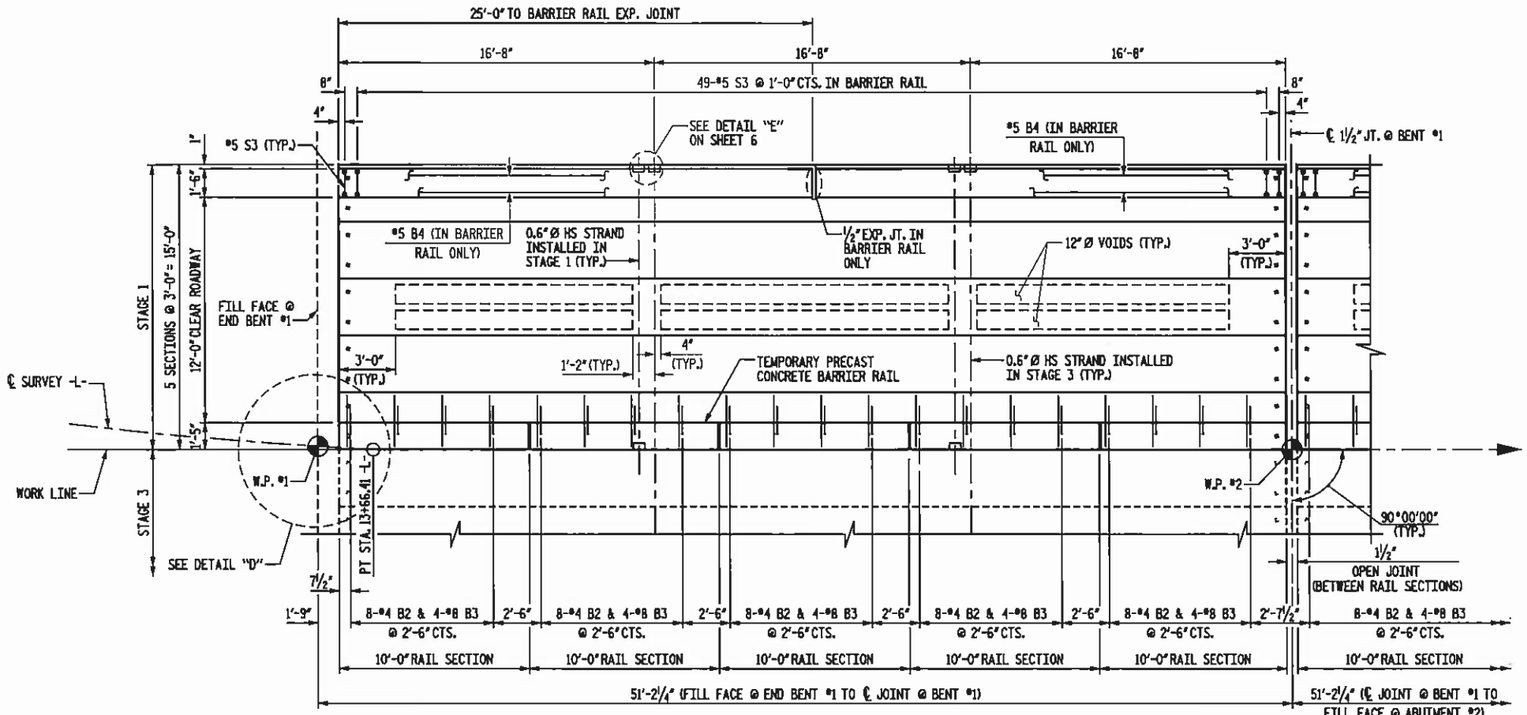

SPAN "A"

STAGE 1 - PLAN OF SPANS

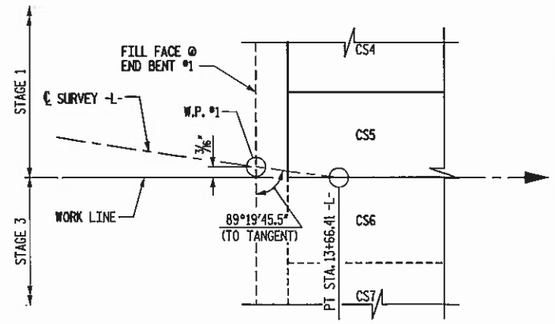

DETAIL "D"

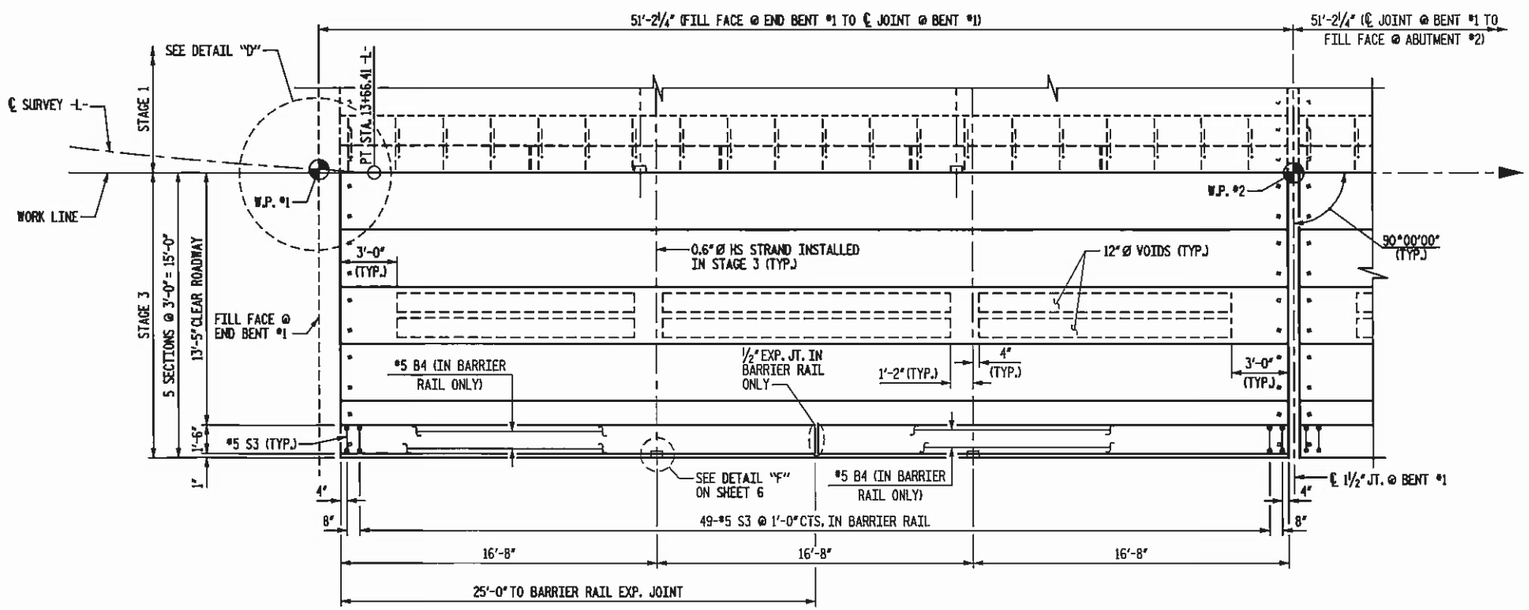

SPAN "A"

STAGE 3 - PLAN OF SPANS

NOT TO SCALE

PROJECT NO. 42576
COUNTY: MITCHELL
STATION: 14+14.67
REPLACES BRIDGE NO. 177

STATE OF NORTH CAROLINA
DEPARTMENT OF TRANSPORTATION
RALEIGH

PLAN OF SPANS
CORED SLAB DETAILS
SPAN A

Florence & Hutcheson
CONSULTING ENGINEERS
5121 Kingdom Way, Suite 100 Raleigh, NC 27607
NC License No. F-0258

NORTH CAROLINA PROFESSIONAL SEAL ENGINEER KAREN M. MOBLEY
10-4-10

REVISIONS						SHEET NO.
NO.	BY	DATE	NO.	BY	DATE	5
1			3			TOTAL SHEETS
2			4			31

DRAWN BY: D.H. CARTER DATE: SEPT. 2010
CHECKED BY: K.M. MOBLEY DATE: SEPT. 2010

FILE NAME: p:\design_projects\structures\11_17\A42576\structure\SR-0176_Sht-Edgn
PLOT: 10/1/2010 2:04:47 PM Kim A. Ammerman, P.E.

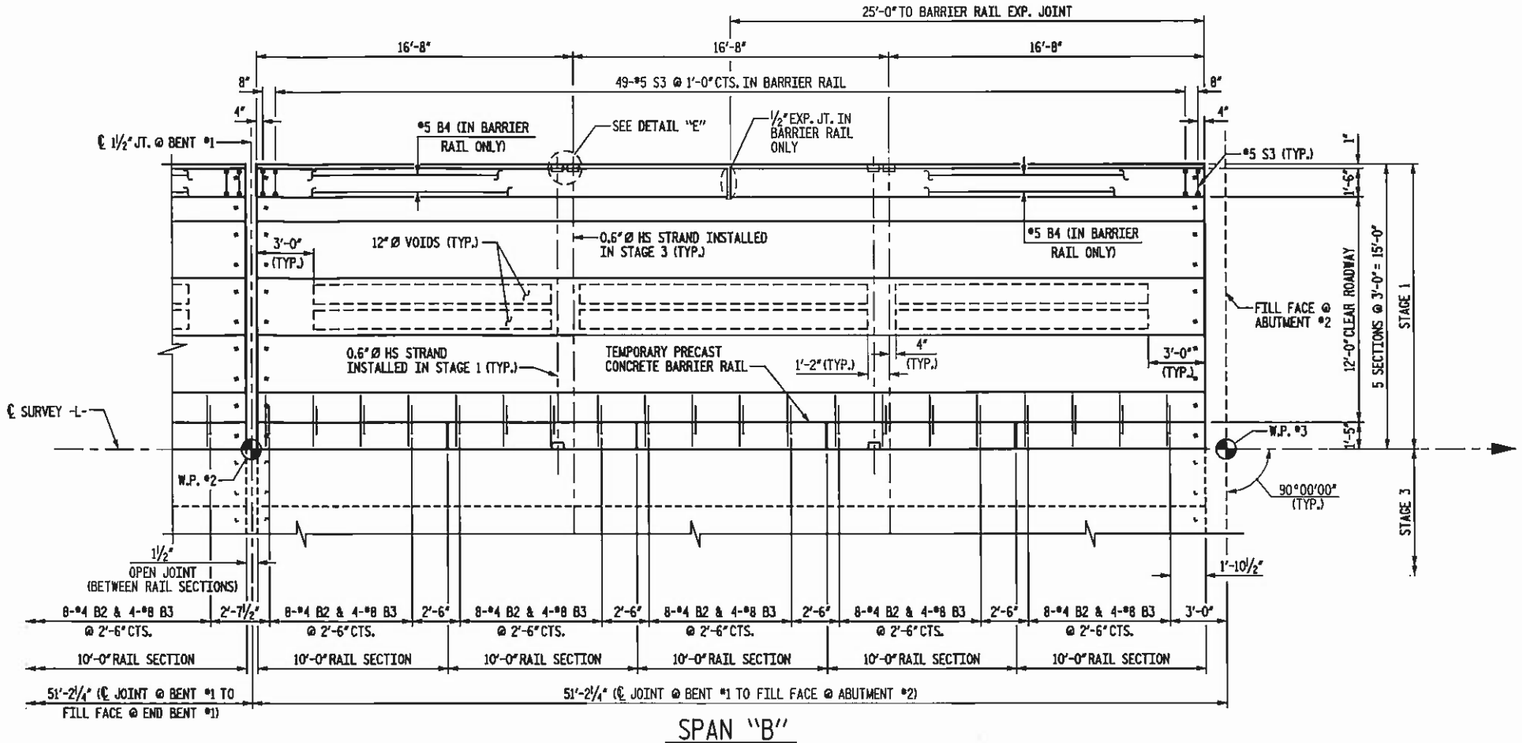

SPAN "B"

STAGE 1 - PLAN OF SPANS

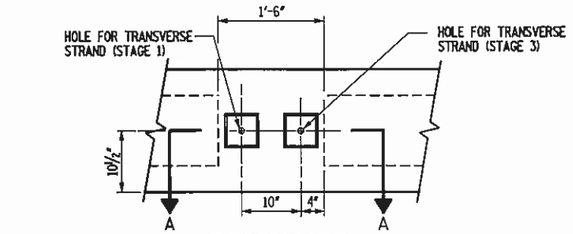

ELEVATION VIEW

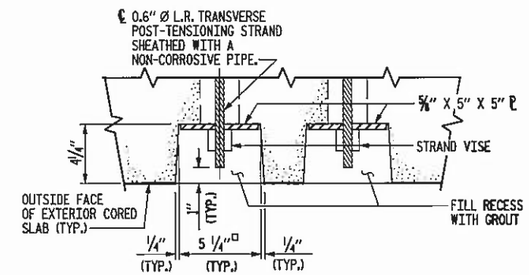

SECTION A-A

DETAIL "E"

GROUTED RECESS AT END OF POST-TENSIONED STRAND CORED SLABS

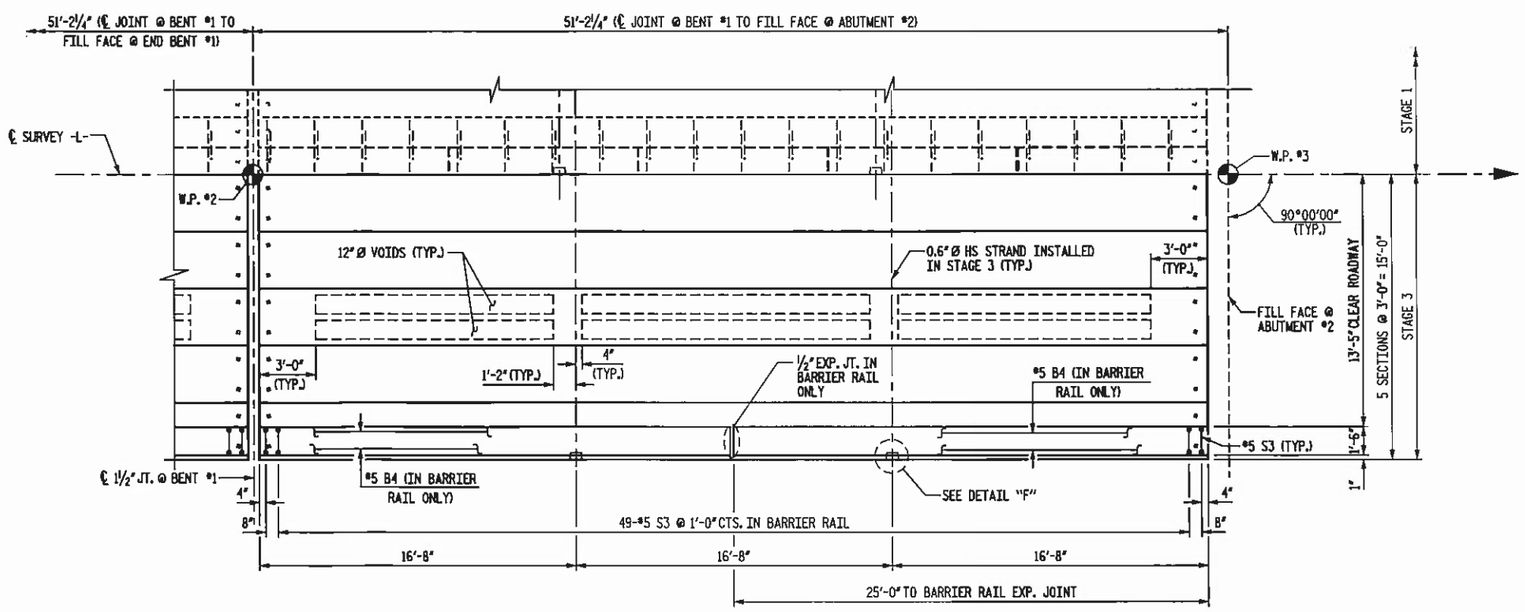

SPAN "B"

STAGE 3 - PLAN OF SPANS

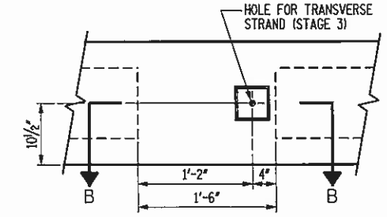

ELEVATION VIEW

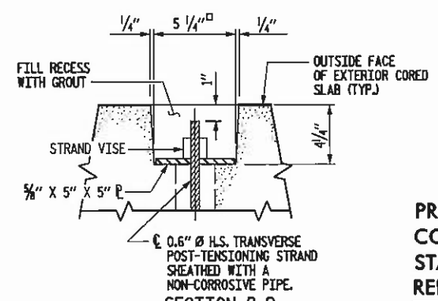

SECTION B-B

DETAIL "F"

GROUTED RECESS AT END OF POST-TENSIONED STRAND CORED SLABS

PROJECT NO. 42576
COUNTY: MITCHELL
STATION: 14+14.67
REPLACES BRIDGE NO. 177

STATE OF NORTH CAROLINA
DEPARTMENT OF TRANSPORTATION
RALEIGH

PLAN OF SPANS
CORED SLAB DETAILS
SPAN B

REVISIONS						
NO.	BY	DATE	NO.	BY	DATE	
1			3			
2			4			

SHEET NO. 6
TOTAL SHEETS 31

Florence & Hutcheson
CONSULTING ENGINEERS
5121 Kingdom Way, Suite 100 Raleigh, NC 27607
NC License No. F-0258

NORTH CAROLINA PROFESSIONAL SEAL ENGINEER KAREN M. MOBLEY
10-4-10

DRAWN BY: D.H. CARTER DATE: SEPT. 2010
CHECKED BY: K.M. MOBLEY DATE: SEPT. 2010

NOT TO SCALE

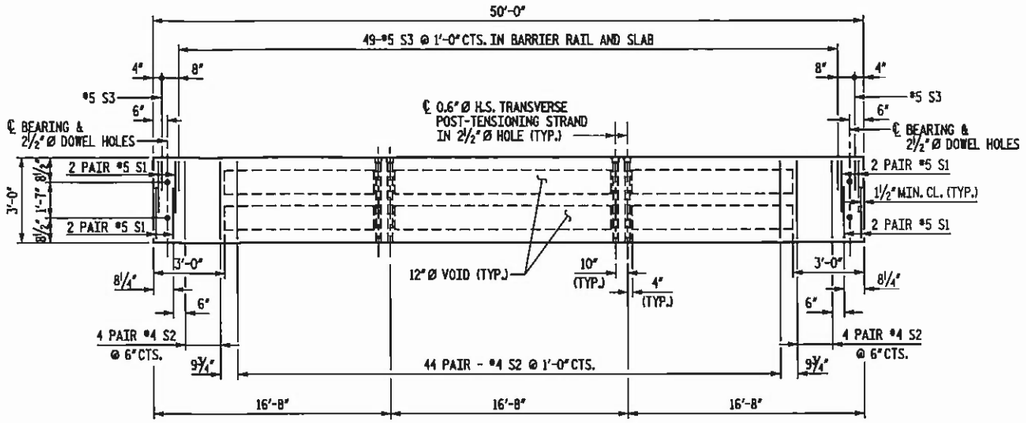

STAGE 1 - 50' SPAN - PLAN OF EXTERIOR CORED SLAB UNIT CS1

SEE DETAIL "B" ON SHEET 4 FOR REINFORCEMENT AT ENDS OF EXTERIOR CORED SLAB UNIT

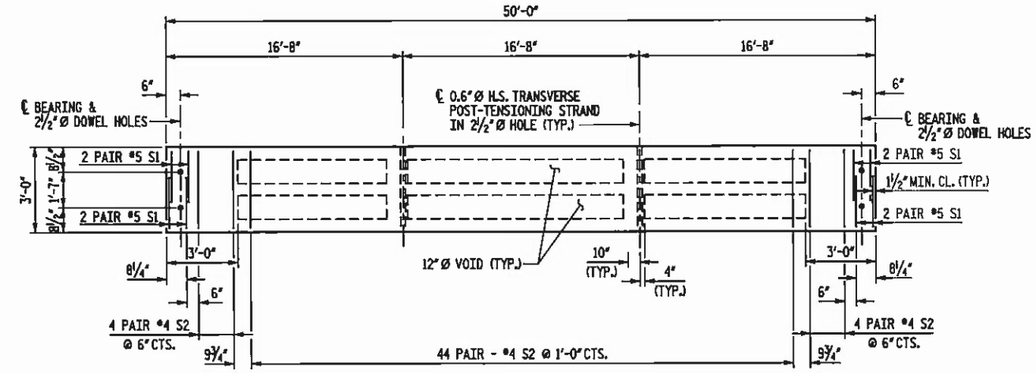

STAGE 3 - 50' SPAN - PLAN OF INTERIOR CORED SLAB UNIT

SEE DETAIL "A" ON SHEET 4 FOR REINFORCEMENT AT ENDS OF INTERIOR CORED SLAB UNIT

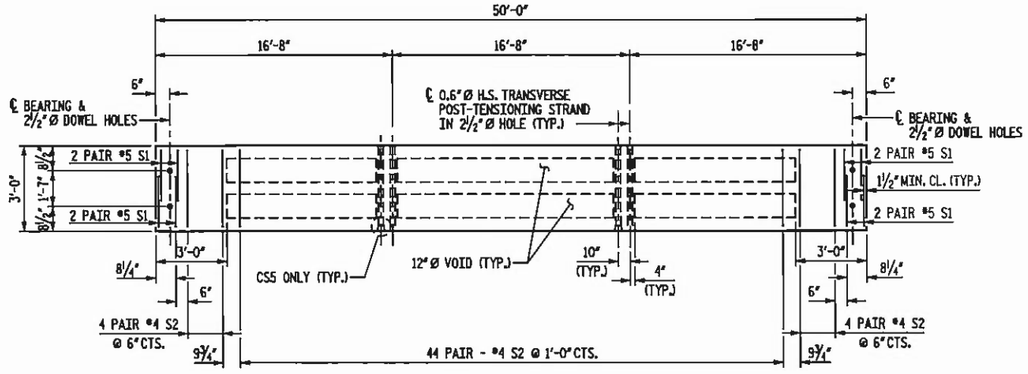

STAGE 1 - 50' SPAN - PLAN OF INTERIOR CORED SLAB UNIT

SEE DETAIL "A" ON SHEET 4 FOR REINFORCEMENT AT ENDS OF INTERIOR CORED SLAB UNIT

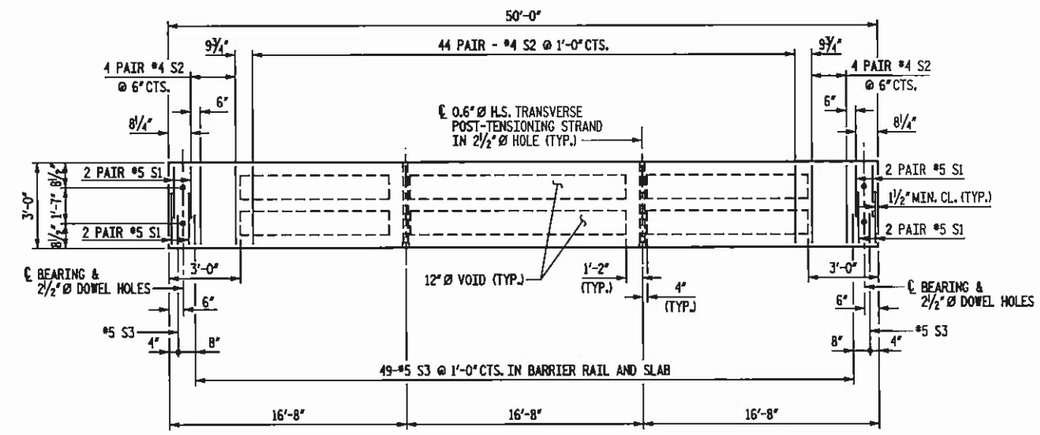

STAGE 3 - 50' SPAN - PLAN OF EXTERIOR CORED SLAB UNIT CS10

SEE DETAIL "B" ON SHEET 4 FOR REINFORCEMENT AT ENDS OF EXTERIOR CORED SLAB UNIT

PROJECT NO. 42576
COUNTY: MITCHELL
STATION: 14+14.67
REPLACES BRIDGE NO. 177

STATE OF NORTH CAROLINA
DEPARTMENT OF TRANSPORTATION
RALEIGH

PLAN OF SPANS
STAGE 1 AND STAGE 3
CORED SLAB DETAILS

Florence & Hutcheson
CONSULTING ENGINEERS
5121 Kingdom Way, Suite 100 Raleigh, NC 27607
NC License No: F-0258

NORTH CAROLINA PROFESSIONAL SEAL ENGINEER KAREN M. MOBLEY
10-4-10

REVISIONS						
NO.	BY	DATE	NO.	BY	DATE	
1			3			
2			4			

SHEET NO. 7
TOTAL SHEETS 31

NOT TO SCALE

DRAWN BY: D.H. CARTER DATE: SEPT. 2010
CHECKED BY: K.M. MOBLEY DATE: SEPT. 2010

PLOT: 10/7/2010 2:40:23 PM Ka & Associates, P.C.
FILE NAME: p:\design_teams\mitchell\177\b0203\structures\BF-0203_Sht-7.dgn

BAR TYPES

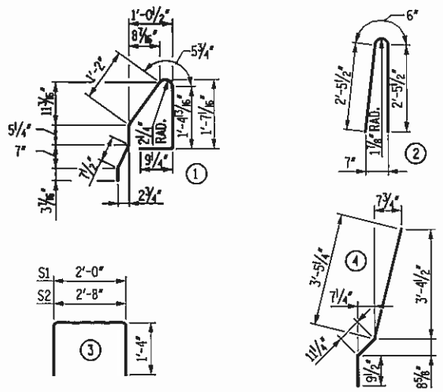

ALL BAR DIMENSIONS ARE OUT TO OUT.

DEAD LOAD DEFLECTION AND CAMBER

	SPAN "A"	SPAN "B"
	3'-0" x 1'-9"	3'-0" x 1'-9"
	0.6"Ø L.R. STRAND	0.6"Ø L.R. STRAND
CAMBER (SLAB ALONE IN PLACE)	1.853 ↑	1.853 ↑
DEFLECTION DUE TO SUPERIMPOSED DEAD LOAD **	0.317 ↑	0.317 ↑
FINAL CAMBER	1.536 ↑	1.536 ↑

** INCLUDES FUTURE WEARING SURFACE

BILL OF MATERIAL FOR 50'-0" INTERIOR CORED SLAB SECTION

BAR	NO.	SIZE	TYPE	LENGTH	WEIGHT
B1	4	#4	STR	25'-9"	69
S1	16	#5	3	4'-8"	78
S2	104	#4	3	5'-4"	370
REINFORCING STEEL				LBS.	517
5500 P.S.I. CONCRETE				C.Y.	7.2
0.6"Ø L.R. STRANDS				NO.	17

BILL OF MATERIAL FOR 50'-0" EXTERIOR CORED SLAB SECTION

BAR	NO.	SIZE	TYPE	LENGTH	WEIGHT
B1	4	#4	STR	25'-9"	69
S1	16	#5	3	4'-8"	78
S2	104	#4	3	5'-4"	370
* S3	51	#5	1	5'-2"	275
REINFORCING STEEL				LBS.	517
*EPOXY COATED REINFORCING STEEL				LBS.	275
5500 P.S.I. CONCRETE				C.Y.	7.3
0.6"Ø L.R. STRANDS				NO.	17

BILL OF MATERIAL FOR 50'-0" INTERIOR CORED SLAB SECTION CS5

BAR	NO.	SIZE	TYPE	LENGTH	WEIGHT
B1	4	#4	STR	25'-9"	69
B2	80	#4	STR	2'-8"	143
B3	40	#8	4	5'-2"	552
S1	16	#5	3	4'-8"	78
S2	104	#4	3	5'-4"	370
REINFORCING STEEL				LBS.	1212
5500 P.S.I. CONCRETE				C.Y.	7.2
0.6"Ø L.R. STRANDS				NO.	17

NOTES

ALL PRESTRESSING STRANDS SHALL BE 7-WIRE LOW RELAXATION GRADE 270 STRANDS AND SHALL CONFORM TO AASHTO M203 EXCEPT FOR SAMPLING REQUIREMENTS WHICH SHALL BE IN ACCORDANCE WITH THE STANDARD SPECIFICATIONS.

ALL REINFORCING STEEL CAST WITH THE CORED SLAB SECTIONS SHALL BE GRADE 60 AND SHALL BE INCLUDED IN THE UNIT PRICE BID FOR PRESTRESSED CONCRETE CORED SLABS.

RECESSES FOR TRANSVERSE STRANDS SHALL BE GROUTED AFTER THE TENSIONING OF THE STRANDS.

THE 2½"Ø DOWEL HOLES AT FIXED ENDS OF SLAB SECTIONS SHALL BE FILLED WITH GROUT.

WHEN CORED SLABS ARE CAST, A POSITIVE HOLD-DOWN SYSTEM SHALL BE EMPLOYED TO PREVENT VOIDS FROM RISING OR MOVING SIDEWAYS. THIS SYSTEM SHALL BE DESIGNED TO BE LEFT IN PLACE UNTIL THE CONCRETE HAS REACHED RELEASE STRENGTH. AT LEAST THREE WEEKS PRIOR TO CASTING CORED SLABS, THE CONTRACTOR SHALL SUBMIT TO THE ENGINEER FOR REVIEW AND COMMENT, DETAILED DRAWINGS OF THE PROPOSED HOLD-DOWN SYSTEM. IN ADDITION TO STRUCTURAL DETAILS, LOCATION AND SPACING OF THE HOLD-DOWNS SHALL BE INDICATED.

THE TRANSFER OF LOAD FROM THE ANCHORAGES TO THE CORED SLAB UNIT SHALL BE DONE WHEN THE CONCRETE HAS REACHED A COMPRESSIVE STRENGTH OF NOT LESS THAN 4400 PSI.

ALL REINFORCING STEEL IN BARRIER RAILS SHALL BE EPOXY COATED.

PRESTRESSING STRANDS SHALL BE CUT FLUSH WITH THE CORED SLAB UNIT ENDS.

APPLY EPOXY PROTECTIVE COATING TO CORED SLAB UNIT ENDS.

VERTICAL GROOVED CONTRACTION JOINTS, ½" IN DEPTH, SHALL BE TOOLED IN ALL EXPOSED FACES OF THE BARRIER RAIL AND IN ACCORDANCE WITH ARTICLE 825-10(B) OF THE STANDARD SPECIFICATIONS. A VERTICAL CONTRACTION JOINT SHALL BE LOCATED AT EACH THIRD POINT BETWEEN BARRIER RAIL EXPANSION JOINTS.

TRANSVERSE POST-TENSIONING OF THE CORED SLAB UNITS SHALL BE DONE IN ACCORDANCE WITH THE STANDARD SPECIFICATIONS, EXCEPT THAT THE STRANDS SHALL BE 0.60Ø AND TENSIONED TO 43,950 POUNDS.

THE MINIMUM AND MAXIMUM HEIGHTS OF THE BARRIER RAIL IS SHOWN. THE HEIGHT OF THE BARRIER RAIL VARIES WHILE THE TOP OF THE RAIL FOLLOWS THE PROFILE OF THE GUTTERLINE.

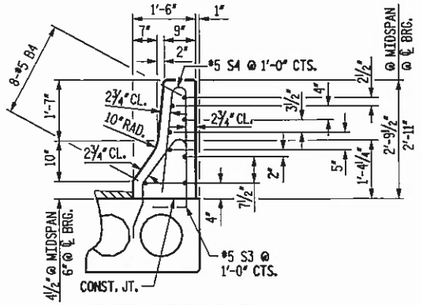

SECTION THRU RAIL

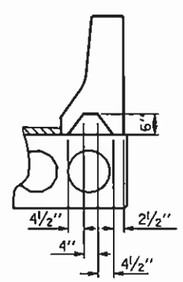

SECTION S-S
AT DAM IN OPEN JOINT
(THIS IS TO BE USED ONLY WHEN SLIP FORM IS USED)

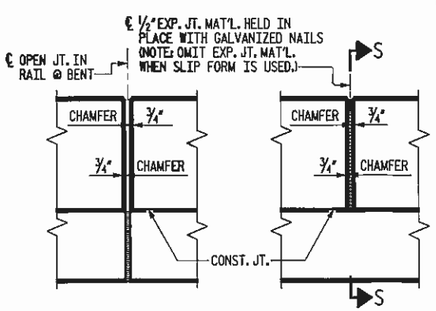

ELEVATION AT EXPANSION JOINTS

BARRIER RAIL DETAILS

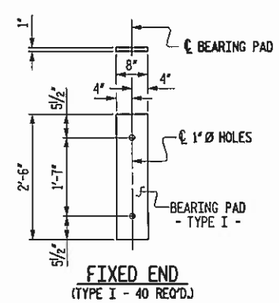

FIXED END
(TYPE I - 40 REQ'D.)

ELASTOMERIC BEARING DETAILS
(ELASTOMER IN BEARINGS SHALL BE 50 DUROMETER HARDNESS)

SUMMARY FOR INTERIOR CORED SLAB SECTIONS

		STAGE 1		STAGE 3		TOTAL
		SPAN "A"	SPAN "B"	SPAN "A"	SPAN "B"	
REINFORCING STEEL	LBS.	2763	2763	2068	2068	9662
*EPOXY COATED REINFORCING STEEL	LBS.	—	—	—	—	—
5500 P.S.I. CONCRETE	C.Y.	28.8	28.8	28.8	28.8	115.2
0.6"Ø L.R. STRANDS	NO.	68	68	68	68	272

SUMMARY FOR EXTERIOR CORED SLAB SECTIONS

		STAGE 1		STAGE 3		TOTAL
		SPAN "A"	SPAN "B"	SPAN "A"	SPAN "B"	
REINFORCING STEEL	LBS.	517	517	517	517	2068
*EPOXY COATED REINFORCING STEEL	LBS.	275	275	275	275	1100
5500 P.S.I. CONCRETE	C.Y.	7.3	7.3	7.3	7.3	29.2
0.6"Ø L.R. STRANDS	NO.	17	17	17	17	68

CORED SLABS REQUIRED - STAGE 1

	NUMBER		LENGTH		TOTAL LENGTH
	SPAN A	SPAN B	SPAN A	SPAN B	
EXTERIOR C.S.	1	1	50'-0"	50'-0"	100'-0"
INTERIOR C.S.	4	4	50'-0"	50'-0"	400'-0"

CORED SLABS REQUIRED - STAGE 3

	NUMBER		LENGTH		TOTAL LENGTH
	SPAN A	SPAN B	SPAN A	SPAN B	
EXTERIOR C.S.	1	1	50'-0"	50'-0"	100'-0"
INTERIOR C.S.	4	4	50'-0"	50'-0"	400'-0"

BILL OF MATERIAL FOR CONCRETE BARRIER RAIL - STAGE 1

BAR	NO.	SIZE	TYPE	LENGTH	WEIGHT
* B4	16	#5	STR	24'-7"	410
* S4	51	#5	2	5'-5"	288
*EPOXY COATED REINFORCING STEEL				LBS.	698
CLASS AA CONCRETE				C.Y.	11.1
TOTAL LIN. FT. OF CONCRETE BARRIER RAIL					100.0

BILL OF MATERIAL FOR CONCRETE BARRIER RAIL - STAGE 3

BAR	NO.	SIZE	TYPE	LENGTH	WEIGHT
* B4	16	#5	STR	24'-7"	410
* S4	51	#5	2	5'-5"	288
*EPOXY COATED REINFORCING STEEL				LBS.	698
CLASS AA CONCRETE				C.Y.	11.1
TOTAL LIN. FT. OF CONCRETE BARRIER RAIL					100.0

GRADE 270 STRANDS

	0.6"Ø L.R.
AREA (SQUARE INCHES)	0.217
ULTIMATE STRENGTH (LBS. PER STRAND)	58,600
APPLIED PRESTRESS (LBS. PER STRAND)	43,950

PROJECT NO. 42576
COUNTY: MITCHELL
STATION: 14+14.67
REPLACES BRIDGE NO. 177

STATE OF NORTH CAROLINA
DEPARTMENT OF TRANSPORTATION
RALEIGH

BILL OF MATERIALS

DRAWN BY: D.H. CARTER DATE: SEPT. 2010
CHECKED BY: K.M. MOBLEY DATE: SEPT. 2010

NOT TO SCALE

Florence & Hutcheson
CONSULTING ENGINEERS
5121 Kingdom Way, Suite 100 Raleigh, NC 27607
NC License No: F-0258

NORTH CAROLINA PROFESSIONAL SEAL ENGINEER KAREN M. MOBLEY
10-4-10

REVISIONS						SHEET NO. 8
NO.	BY	DATE	NO.	BY	DATE	TOTAL SHEETS
1			3			31
2			4			

FILE NAME: p:\Mpro_parm\wsdot\L177\BC5220_rev-stru-mo\04-B325_Rev-B-Align
PLOT: 10/1/2010 2:08:27 PM By: D. Anderson Jr., P.E.

BAR TYPES

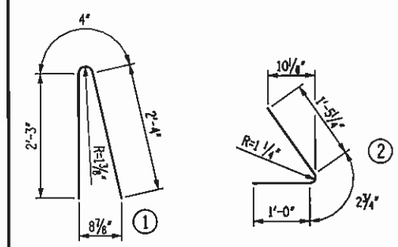

BAR DIMENSIONS ARE OUT TO OUT.

BILL OF MATERIAL

FOR ONE 10'-0" RAIL SECTION

BAR	NO.	SIZE	TYPE	LENGTH	WEIGHT
B5	9	#5	1	4'-11"	46
B6	9	#5	2	2'- 8"	25
B7	5	#5	STR	9'- 7"	50
REINFORCING STEEL				LBS.	121
CLASS AA CONCRETE				C. Y.	1.0

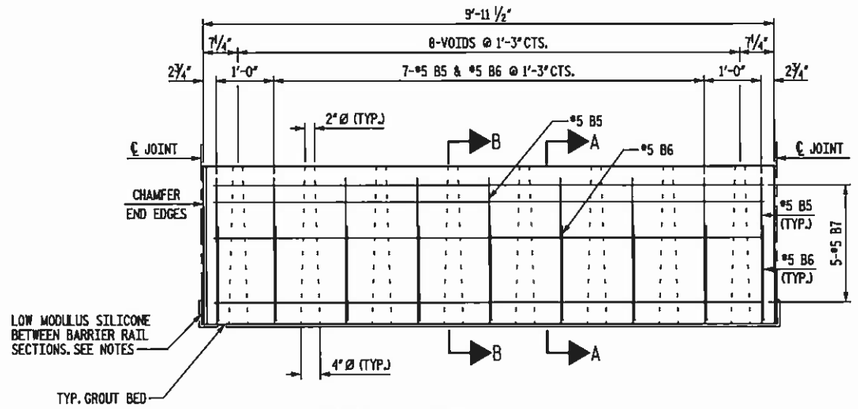

TYPICAL 10'-0" PRECAST UNIT

NOTES

EACH PRECAST RAIL UNIT SHALL BE CAST WITH CLASS AA CONCRETE.

EACH PRECAST RAIL UNIT SHALL BE SUPPLIED WITH LIFTING DEVICE(S). NO CABLES ARE TO BE WRAPPED AROUND THE RAIL UNITS FOR LIFTING.

THE EXPANSION JOINT SEALER SHALL BE LOW MODULUS SILICONE SEALANT. SEE SECTION 1028-4 OF THE STANDARD SPECIFICATIONS.

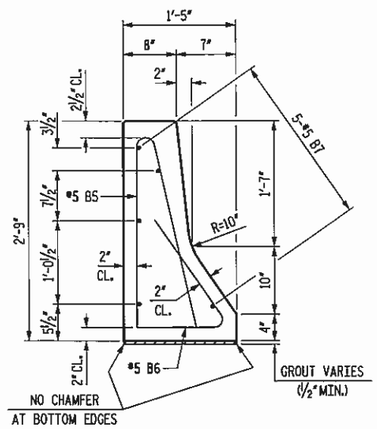

SECTION A-A

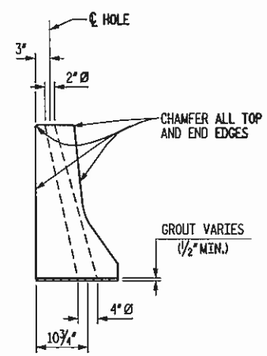

SECTION B-B

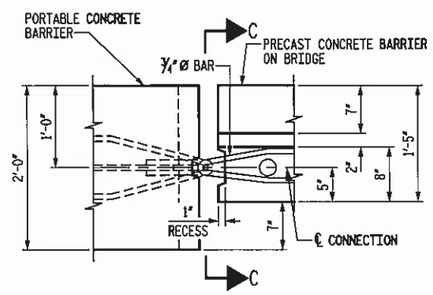

PLAN

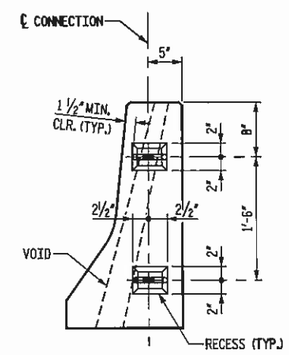

SECTION C-C

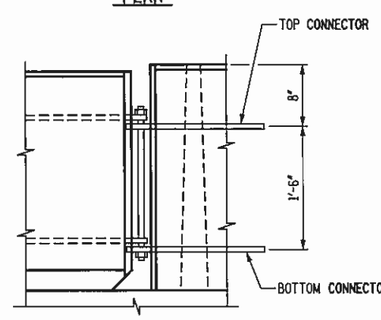

ELEVATION

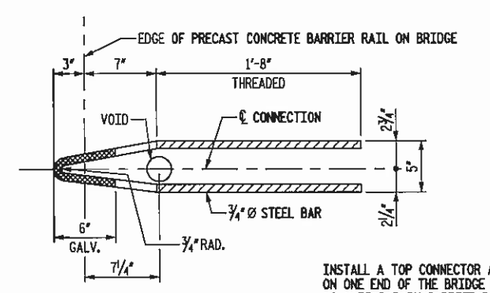

CONNECTOR DETAIL

CONNECTION DETAIL

(PORTABLE CONCRETE BARRIER AT END OF BRIDGE)

INSTALL A TOP CONNECTOR AND A BOTTOM CONNECTOR ON ONE END OF THE BRIDGE BARRIER RAIL UNIT, USED AS A TEMPORARY BARRIER RAIL FOR STAGE 1 CONSTRUCTION, LOCATED AT THE BEGINNING AND AT THE END OF THE BRIDGE.

AFTER REMOVING THE BARRIER RAIL IN STAGE 3, CUT THE 3/4" Ø BAR CONNECTOR FLUSH WITH THE CONCRETE SURFACE. FILL RECESS WITH NON-SHRINK, NON-METALLIC GROUT TO THE NEAT LINE OF BARRIER RAIL UNIT.

PROJECT NO. 42576
COUNTY: MITCHELL
STATION: 14+14.67
REPLACES BRIDGE NO. 177

STATE OF NORTH CAROLINA
DEPARTMENT OF TRANSPORTATION
RALEIGH

STANDARD PRECAST CONCRETE BARRIER RAIL SECTIONS FOR STAGE CONSTRUCTION

Florence & Hutcheson
CONSULTING ENGINEERS
5121 Kingdom Way, Suite 100 Raleigh, NC 27607
NC License No: F-0258

NORTH CAROLINA PROFESSIONAL SEAL ENGINEER KAREN M. MOBLEY
10-4-10

REVISIONS						SHEET NO.
NO.	BY	DATE	NO.	BY	DATE	9
1			3			TOTAL SHEETS
2			4			31

DRAWN BY: D.H. CARTER DATE: SEPT. 2010
CHECKED BY: K.M. MOBLEY DATE: SEPT. 2010

NOT TO SCALE

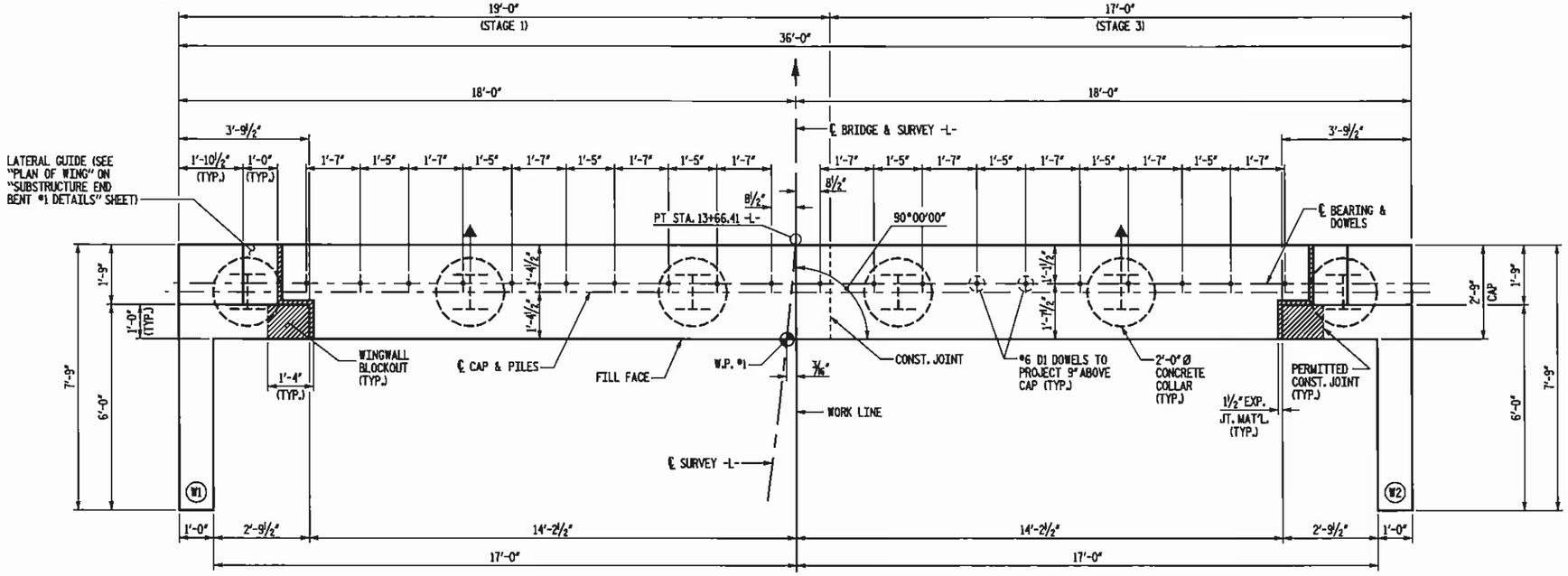

PLAN

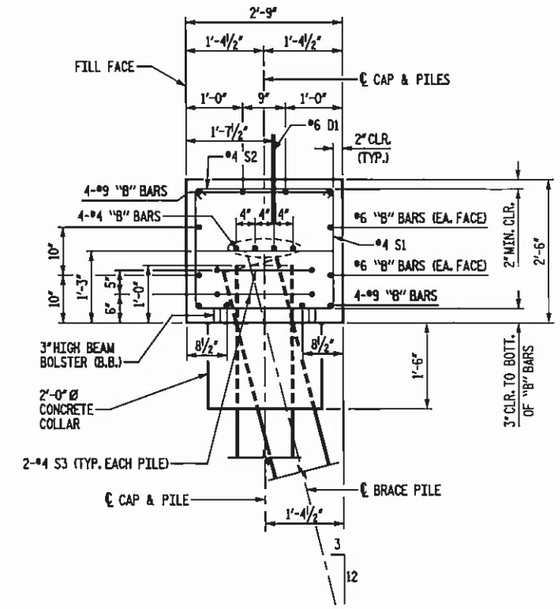

SECTION A-A

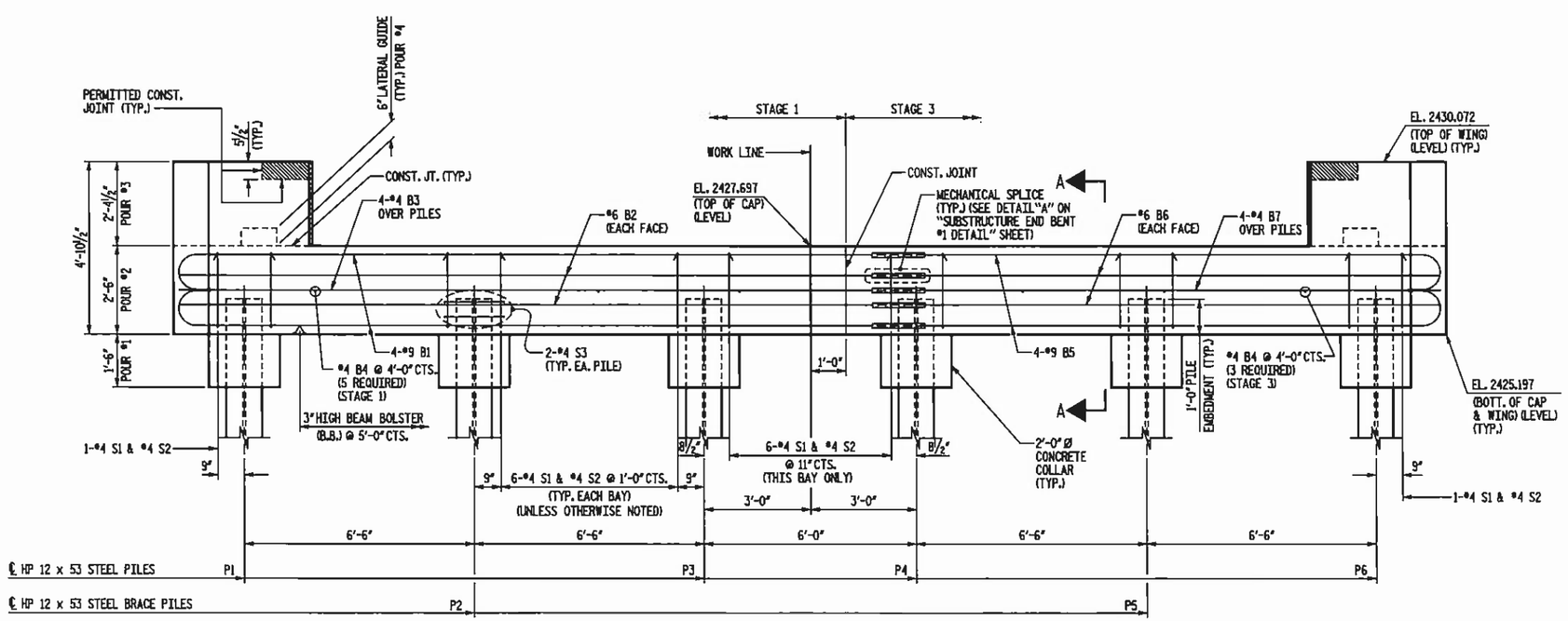

ELEVATION

NOTES:

STIRRUPS IN CAP MAY BE SHIFTED SLIGHTLY AS NECESSARY TO CLEAR DOWELS.

THE CONCRETE IN THE SHADED AREA OF THE WING SHALL BE POURED AFTER THE BARRIER RAIL IS CAST IF SLIP FORMING IS USED.

FOR PILE SPLICE DETAILS AND TEMPORARY DRAINAGE DETAILS, SEE "END BENT #1 DETAILS" SHEET.

INDICATES BRACE PILE (BATTER: 3:12)

PROJECT NO. 42576
COUNTY: MITCHELL
STATION: 14+14.67
REPLACES BRIDGE NO. 177

STATE OF NORTH CAROLINA
DEPARTMENT OF TRANSPORTATION
RALEIGH

SUBSTRUCTURE
END BENT #1

NORTH CAROLINA PROFESSIONAL SEAL ENGINEER KAREN M. MOBLEY
10-4-10

Florence & Hutcheson
CONSULTING ENGINEERS
5121 Kingdom Way, Suite 100 Raleigh, NC 27607
NC License No: F-0258

NOT TO SCALE

DRAWN BY: D.H. CARTER DATE: SEPT. 2010
CHECKED BY: K.M. MOBLEY DATE: SEPT. 2010

REVISIONS						SHEET NO.
NO.	BY	DATE	NO.	BY	DATE	10
1			3			TOTAL SHEETS
2			4			31

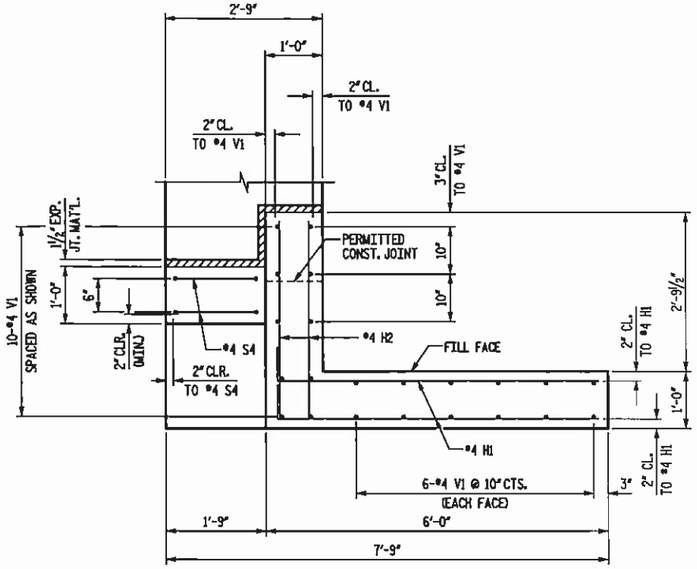

PLAN OF WING

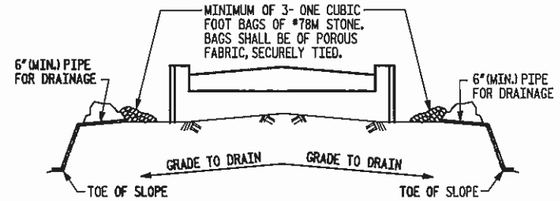

BAGGED STONE AND PIPE SHALL BE PLACED IMMEDIATELY AFTER COMPLETION OF END BENT EXCAVATION. PIPE MAY BE EITHER CONCRETE, CORRUGATED STEEL, CORRUGATED ALUMINUM ALLOY, OR CORRUGATED PLASTIC. PERFORATED PIPE WILL NOT BE ALLOWED.

BAGGED STONE SHALL REMAIN IN PLACE UNTIL THE ENGINEER DIRECTS THAT IT BE REMOVED. THE CONTRACTOR SHALL REMOVE AND DISPOSE OF SILT ACCUMULATIONS AT BAGGED STONE WHEN SO DIRECTED BY THE ENGINEER. BAGS SHALL BE REMOVED AND REPLACED WHENEVER THE ENGINEER DETERMINES THAT THEY HAVE DETERIORATED AND LOST THEIR EFFECTIVENESS.

NO SEPARATE PAYMENT WILL BE MADE FOR THIS WORK AND THE ENTIRE COST OF THIS WORK SHALL BE INCLUDED IN THE UNIT CONTRACT PRICE BID FOR THE SEVERAL PAY ITEMS.

TEMPORARY DRAINAGE AT END BENT

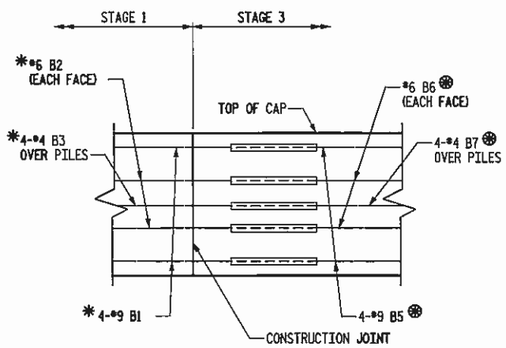

DETAIL "A"

* EXTEND ALL BARS IN STAGE 1 1'-0" MIN. BEYOND CONST. JOINT

⊛ PLACE ALL BARS IN STAGE 3 AT OR NEAR THE END OF BARS EXTENDING FROM STAGE 1.

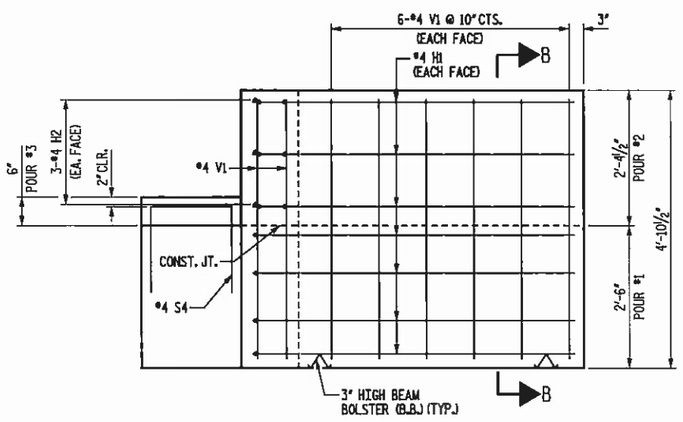

ELEVATION OF WING

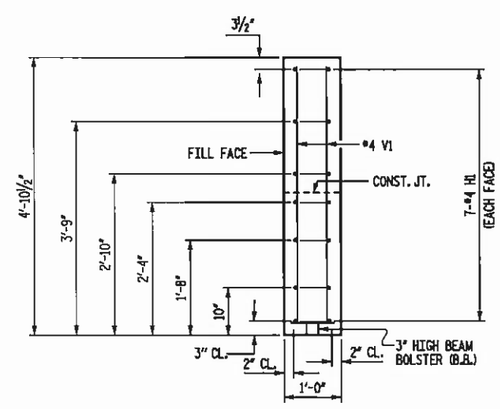

SECTION B-B

BAR TYPES

ALL BAR DIMENSIONS ARE OUT TO OUT.

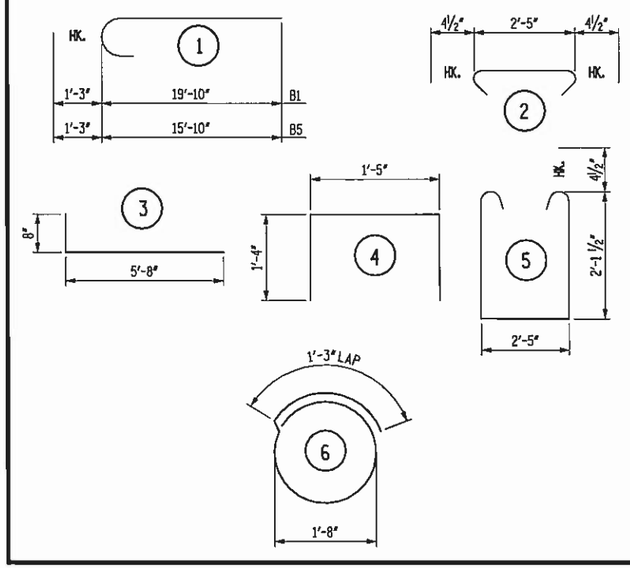

BILL OF MATERIAL

END BENT 1 STAGE 1

BAR	NO.	SIZE	TYPE	LENGTH	WEIGHT
B1	8	#9	1	21'-1"	573
B2	4	#6	STR	19'-10"	119
B3	4	#4	STR	19'-10"	53
B4	5	#4	STR	2'-5"	8
D1	11	#6	STR	1'-6"	25
H1	14	#4	3	6'-4"	59
H2	6	#4	STR	3'-5"	14
S1	17	#4	5	7'-5"	84
S2	17	#4	2	3'-2"	36
S3	6	#4	6	6'-6"	26
S4	2	#4	4	4'-1"	5
V1	22	#4	STR	4'-7"	67
REINFORCING STEEL TOTAL				LBS.	1,069

POUR #1 COLLAR	0.5	CY
POUR #2 CAP & BOTTOM OF WING	5.3	CY
POUR #3 TOP OF WING	0.8	CY
POUR #4 LATERAL GUIDE	0.1	CY
TOTAL	6.7	CY

END BENT 1 STAGE 3

BAR	NO.	SIZE	TYPE	LENGTH	WEIGHT
B4	3	#4	STR	2'-5"	5
B5	8	#9	1	17'-1"	465
B6	4	#6	STR	15'-10"	95
B7	4	#4	STR	15'-10"	42
D1	9	#6	STR	1'-6"	20
H1	14	#4	3	6'-4"	59
H2	6	#4	STR	3'-5"	14
S1	15	#4	5	7'-5"	74
S2	15	#4	2	3'-2"	32
S3	6	#4	6	6'-6"	26
S4	2	#4	4	4'-1"	5
V1	22	#4	STR	4'-7"	67
REINFORCING STEEL TOTAL				LBS.	904

POUR #1 COLLAR	0.5	CY
POUR #2 CAP & BOTTOM OF WING	4.8	CY
POUR #3 TOP OF WING	0.8	CY
POUR #4 LATERAL GUIDE	0.1	CY
TOTAL	6.2	CY

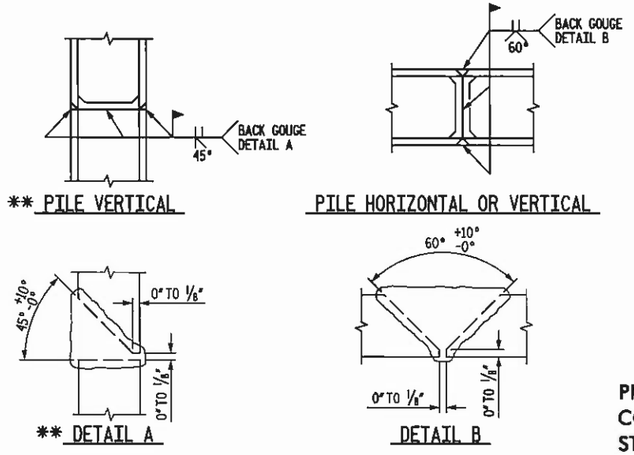

** POSITION OF PILE DURING WELDING

PILE SPLICE DETAILS

PROJECT NO. 42576
COUNTY: MITCHELL
STATION: 14+14.67
REPLACES BRIDGE NO. 177

STATE OF NORTH CAROLINA
DEPARTMENT OF TRANSPORTATION
RALEIGH

SUBSTRUCTURE
END BENT #1 DETAILS

Florence & Hutcheson
CONSULTING ENGINEERS
5121 Kingstown Way, Suite 100 Raleigh, NC 27607
NC License No: F-0268

NORTH CAROLINA PROFESSIONAL SEAL ENGINEER KAREN M. MOBLEY
Karen M. Mobley
10-4-10

REVISIONS						SHEET NO.
NO.	BY	DATE	NO.	BY	DATE	11
1			3			TOTAL SHEETS
2			4			31

DRAWN BY: D.H. CARTER DATE: SEPT. 2010
CHECKED BY: K.M. MOBLEY DATE: SEPT. 2010

NOT TO SCALE

NOTES:

STIRRUPS MAY BE SHIFTED SLIGHTLY AS NECESSARY TO CLEAR DOWELS.

HOOKS ON "V" BARS MAY BE TURNED AS NECESSARY FOR PLACING REINFORCING STEEL.

THE CONTRACTOR'S ATTENTION IS CALLED TO THE FACT THAT THE LONGITUDINAL REINFORCEMENT FOR THE DRILLED PIERS IS DETAILED WITH 3 FEET OF EXTRA LENGTH.

SPLICING OF THE LONGITUDINAL BARS IN THE DRILLED PIER WILL NOT BE PERMITTED.

MECHANICAL COUPLERS SHALL BE USED TO JOIN THE LONGITUDINAL DRILLED PIER REINFORCING STEEL TO THE COLUMN REINFORCING STEEL. THE HEIGHT OF THE COUPLERS SHALL BE STAGGERED ON ALTERNATING BARS BY 1 FOOT AND THE DRILLED PIER AND COLUMN STEEL SHALL BE CUT ACCORDINGLY. SEE SPECIAL PROVISIONS FOR MECHANICAL BUTT SPLICING FOR REINFORCING STEEL.

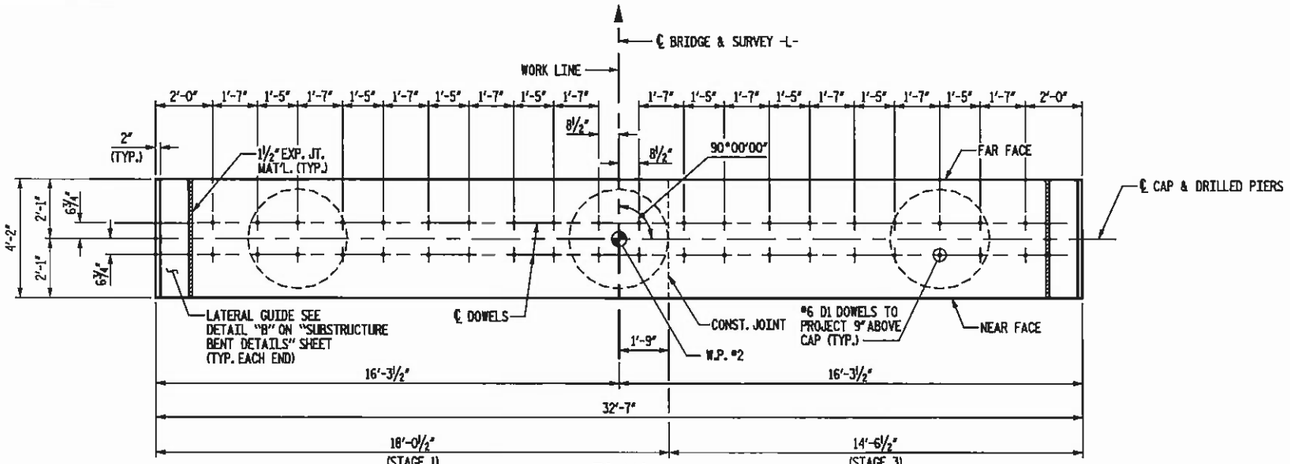

PLAN

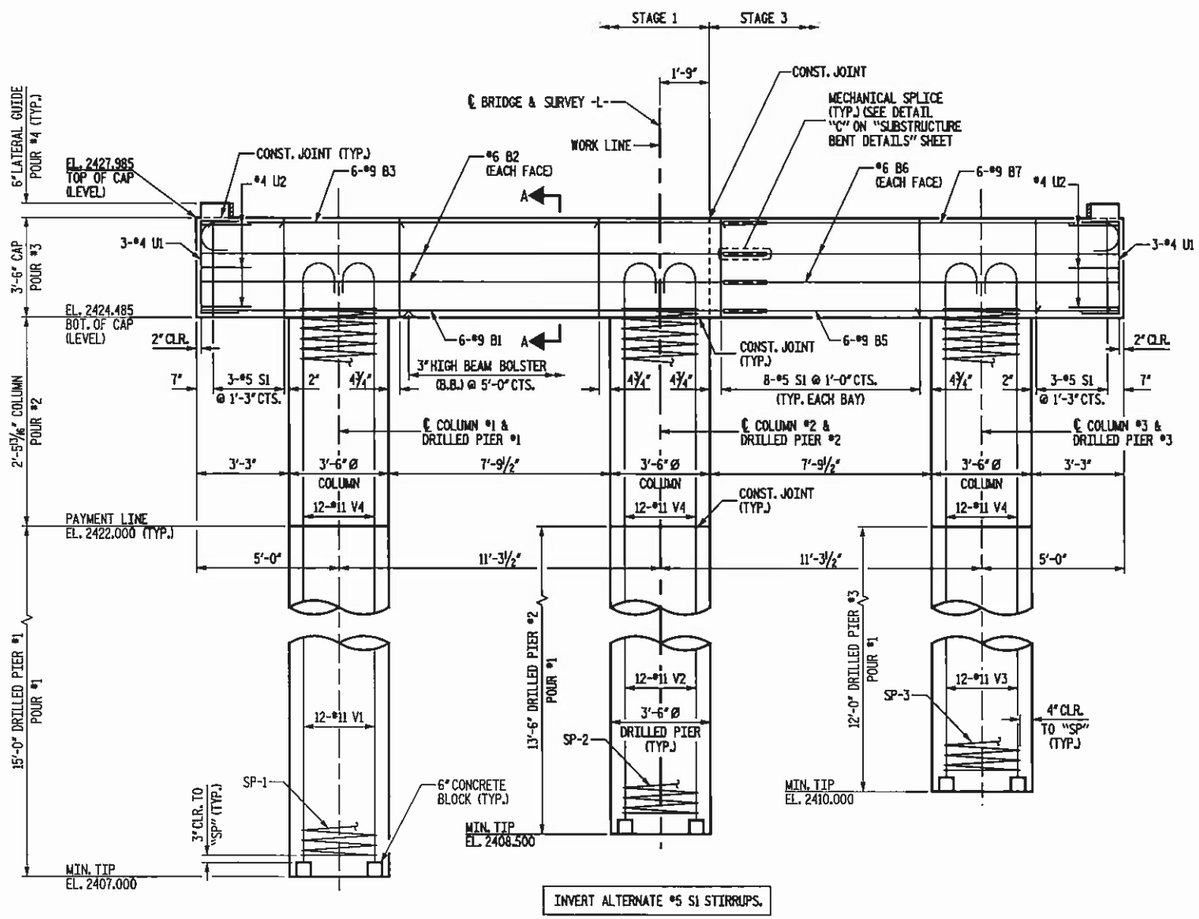

INVERT ALTERNATE #5 S1 STIRRUPS.

ELEVATION

DETAILS SHOWN FOR DRILLED PIERS ARE TYPICAL.

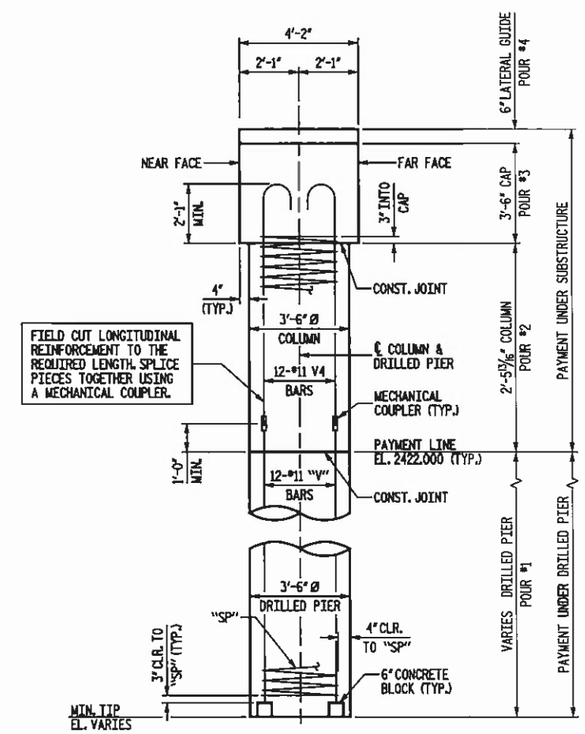

END ELEVATION

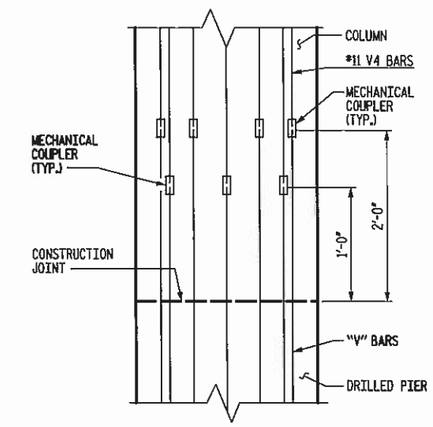

MECHANICAL COUPLER STAGGER DETAIL

PROJECT NO. 42576
COUNTY: MITCHELL
STATION: 14+14.67
REPLACES BRIDGE NO. 177

STATE OF NORTH CAROLINA
DEPARTMENT OF TRANSPORTATION
RALEIGH

SUBSTRUCTURE
BENT 1

NOT TO SCALE

Florence & Hutcheson
CONSULTING ENGINEERS
5121 Kingdom Way, Suite 100 Raleigh, NC 27607
NC License No. F-0258

NORTH CAROLINA PROFESSIONAL SEAL ENGINEER KAREN M. MOYER
10-4-10

REVISIONS						SHEET No.
NO.	BY	DATE	NO.	BY	DATE	12
1			3			TOTAL SHEETS
2			4			31

DRAWN BY: D.H. CARTER DATE: SEPT. 2010
CHECKED BY: M.J. MOYER DATE: SEPT. 2010

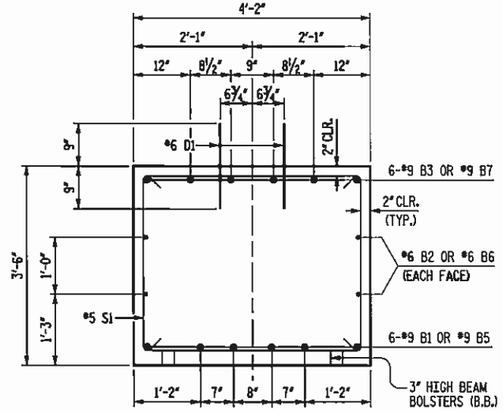

SECTION A-A

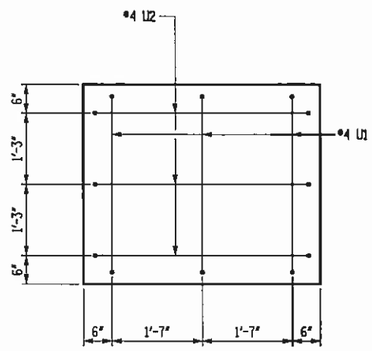

CAP END VIEW

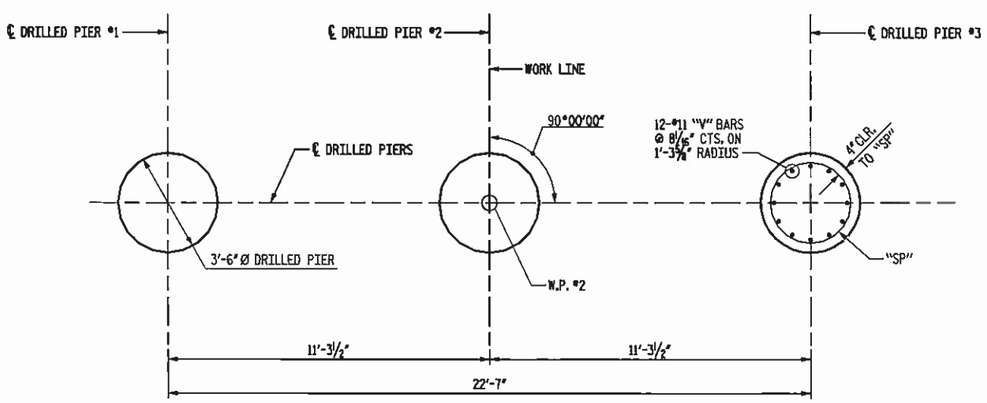

PLAN OF DRILLED PIERS

ALL DIMENSIONS AND DETAILS SHOWN FOR DRILLED PIERS ARE TYPICAL FOR EACH DRILLED PIER.

BAR TYPES

ALL BAR DIMENSIONS ARE OUT TO OUT.

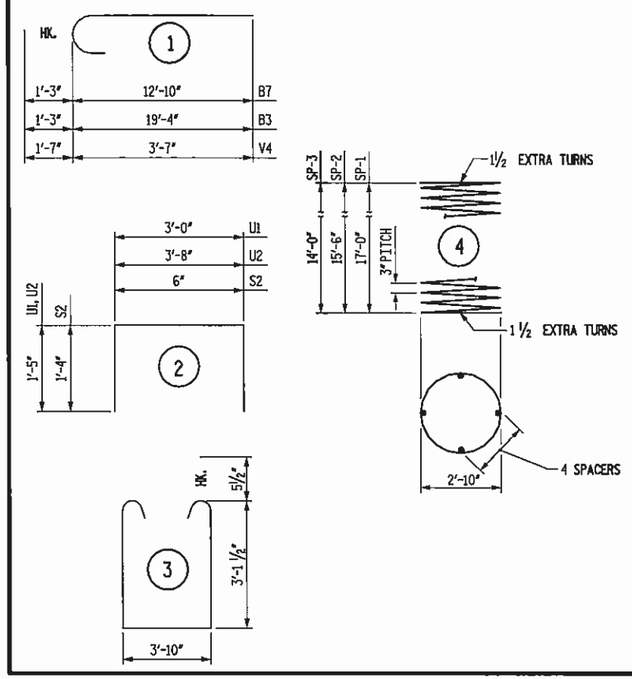

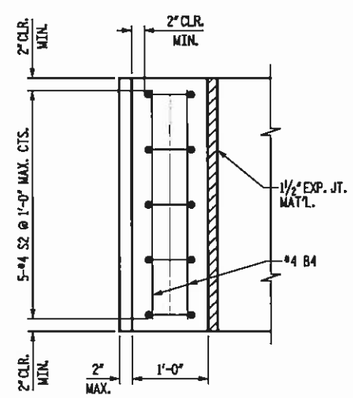

PLAN

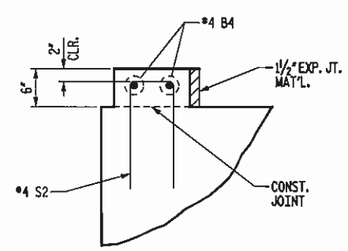

ELEVATION

DETAIL "B"

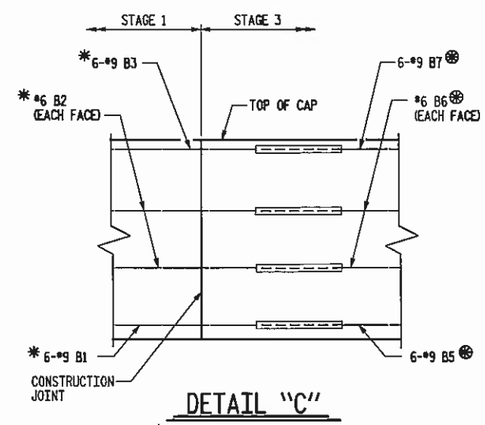

DETAIL "C"

* EXTEND ALL BARS IN STAGE 1 1'-6" MIN. BEYOND CONST. JOINT

⊛ PLACE ALL BARS IN STAGE 3 AT OR NEAR THE END OF BARS EXTENDING FROM STAGE 1.

BILL OF MATERIAL

INTERIOR BENT - STAGE 1

BAR	NO.	SIZE	TYPE	LENGTH	WEIGHT
B1	6	*9	STR	19'-4"	394
B2	4	*6	STR	19'-4"	116
B3	6	*9	1	20'-7"	420
B4	2	*4	STR	3'-10"	5
D1	22	*6	STR	1'-6"	50
S1	11	*5	3	11'-0"	126
S2	5	*4	2	3'-2"	11
U1	3	*4	2	5'-10"	12
U2	3	*4	2	6'-6"	13
V1	11	*11	STR	19'-6"	1140
V2	11	*11	STR	18'-0"	1052
V4	22	*11	1	5'-2"	604

REINFORCING STEEL TOTAL 3,943 LB

SPIRAL REINFORCING STEEL

BAR	NO.	SIZE	TYPE	LENGTH	WEIGHT
SP-1	1	**	4	622'-11"	416
SP-2	1	**	4	570'-4"	381

SPIRAL REINFORCING STEEL TOTAL 797 LB

CLASS A CONCRETE BREAKDOWN

POUR *2 COLUMNS	1.8	CY
POUR *3 CAP	9.7	CY
POUR *4 LATERAL GUIDE	0.1	CY
TOTAL	21.8	CY

DRILLED PIERS

DRILLED PIER CONCRETE

POUR *1 DRILLED PIERS	10.2	CY
42" Ø DRILLED PIER IN SOIL	17.8	LF
42" Ø DRILLED PIER NOT IN SOIL	10.8	LF
42" Ø PERMANENT STEEL CASING	13.0	LF

INTERIOR BENT - STAGE 3

BAR	NO.	SIZE	TYPE	LENGTH	WEIGHT
B4	2	*4	STR	3'-10"	5
B5	6	*9	STR	12'-10"	262
B6	4	*6	STR	12'-10"	77
B7	6	*9	1	14'-1"	287
D1	18	*6	STR	1'-6"	41
S1	11	*5	3	11'-0"	126
S2	5	*4	2	3'-2"	11
U1	3	*4	2	5'-10"	12
U2	3	*4	2	6'-6"	13
V3	11	*11	STR	16'-6"	964
V4	11	*11	1	5'-2"	302

REINFORCING STEEL TOTAL 2,100 LB

SPIRAL REINFORCING STEEL

BAR	NO.	SIZE	TYPE	LENGTH	WEIGHT
SP-3	1	**	4	517'-8"	346

SPIRAL REINFORCING STEEL TOTAL 346 LB

CLASS A CONCRETE BREAKDOWN

POUR *2 COLUMN	0.9	CY
POUR *3 CAP	7.9	CY
POUR *4 LATERAL GUIDE	0.1	CY
TOTAL	13.2	CY

DRILLED PIER

DRILLED PIER CONCRETE

POUR *1 DRILLED PIER	4.3	CY
42" Ø DRILLED PIER IN SOIL	7.0	LF
42" Ø DRILLED PIER NOT IN SOIL	5.0	LF
42" Ø PERMANENT STEEL CASING	6.5	LF

** NOTE: THE SP-1 SPIRAL REINFORCING STEEL SHALL BE W20 OR D-20 COLD DRAWN WIRE OR *4 PLAIN OR DEFORMED BAR.

PROJECT NO. 42576
COUNTY: MITCHELL
STATION: 14+14.67
REPLACES BRIDGE NO. 177

STATE OF NORTH CAROLINA
DEPARTMENT OF TRANSPORTATION
RALEIGH

SUBSTRUCTURE BENT DETAILS

REVISIONS						SHEET NO.
NO.	BY	DATE	NO.	BY	DATE	13
1			3			TOTAL SHEETS
2			4			31

Florence & Hutcheson
CONSULTING ENGINEERS
3121 Kingdom Way, Suite 100 Raleigh, NC 27607
NC License No. F-0268

NORTH CAROLINA PROFESSIONAL SEAL ENGINEER KAREN M. MOYER
10-4-10

NOT TO SCALE

DRAWN BY: D.H. CARTER DATE: SEPT. 2010
CHECKED BY: M.J. MOYER DATE: SEPT. 2010

NOTES:

STIRRUPS MAY BE SHIFTED SLIGHTLY AS NECESSARY TO CLEAR DOWELS.

PIPE DRAINS MAY BE SHIFTED SLIGHTLY AS NECESSARY TO CLEAR REINFORCING STEEL AND DOWELS.

FOOTINGS SHALL NOT BE CONSTRUCTED AT AN ELEVATION HIGHER THAN SHOWN ON THE PLANS.

FOR ABUTMENT DETAILS, SEE SHEETS NO. 15, 16 & 17.

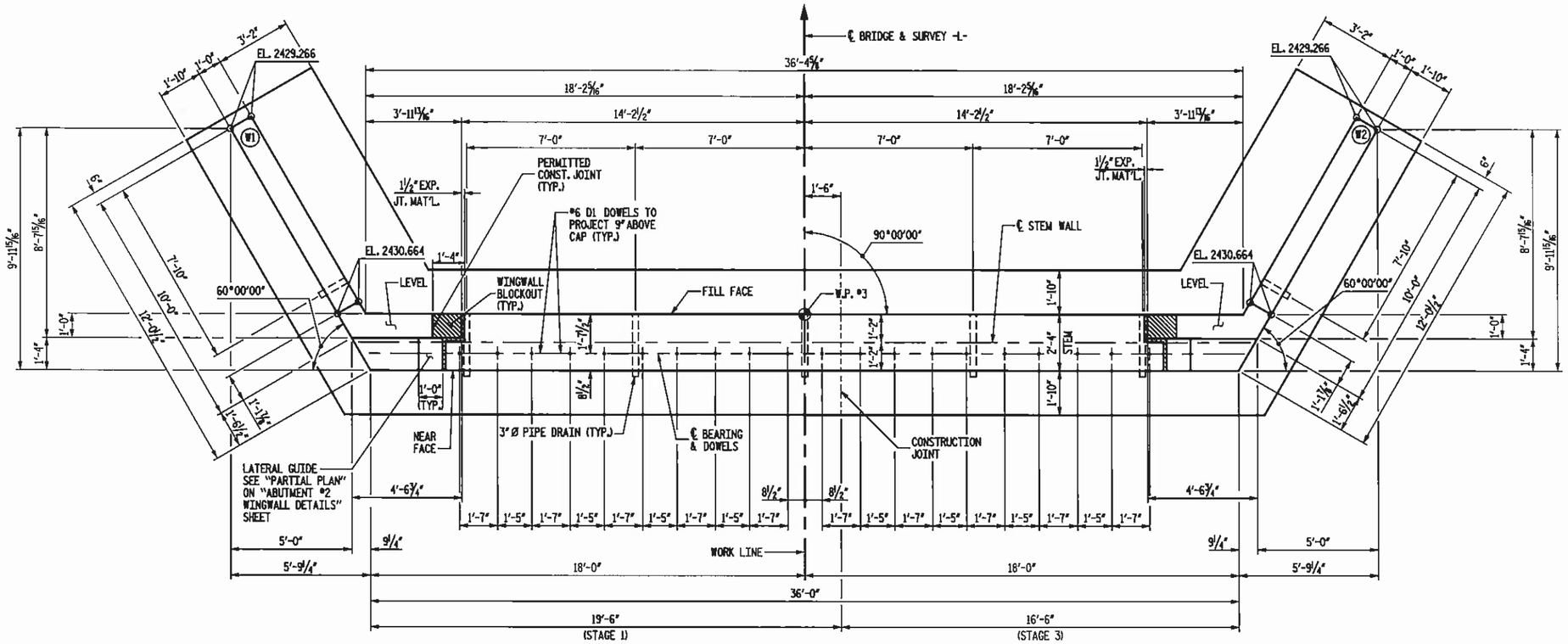

PLAN

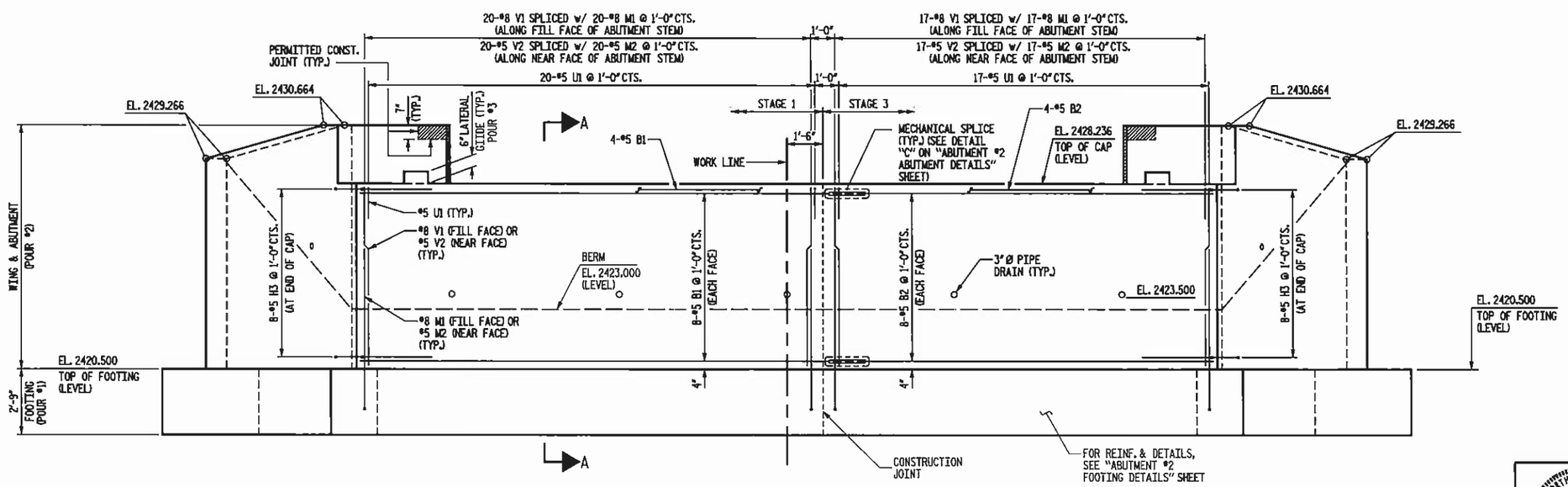

ELEVATION

(FOOTING REINFORCEMENT NOT SHOWN FOR CLARITY)

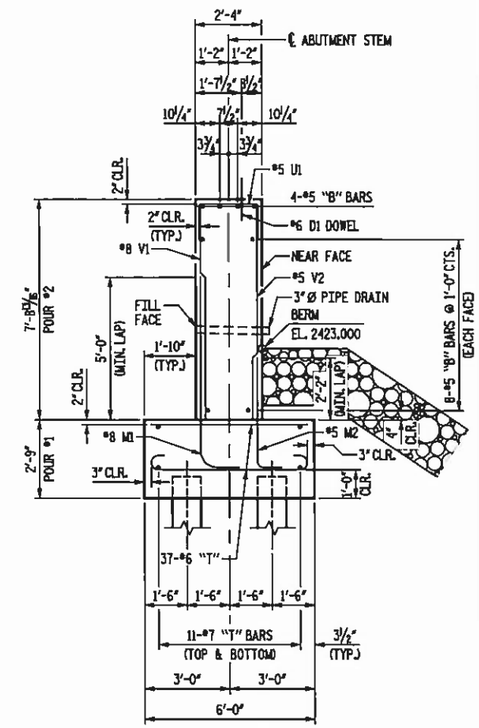

SECTION A-A

PROJECT NO. 42576
COUNTY: MITCHELL
STATION: 14+14.67
REPLACES BRIDGE NO. 177

STATE OF NORTH CAROLINA
DEPARTMENT OF TRANSPORTATION
RALEIGH

SUBSTRUCTURE
ABUTMENT #2

NOT TO SCALE

Florence & Hutcheson
CONSULTING ENGINEERS
5121 Kingdom Way, Suite 100 Raleigh, NC 27607
NC License No: F-0258

NORTH CAROLINA PROFESSIONAL SEAL ENGINEER KAREN M. MOYER
10-4-10

REVISIONS						SHEET NO.
NO.	BY	DATE	NO.	BY	DATE	14
1			3			TOTAL SHEETS
2			4			31

DRAWN BY: D.H. CARTER DATE: SEPT. 2010
CHECKED BY: M.J. MOYER DATE: SEPT. 2010

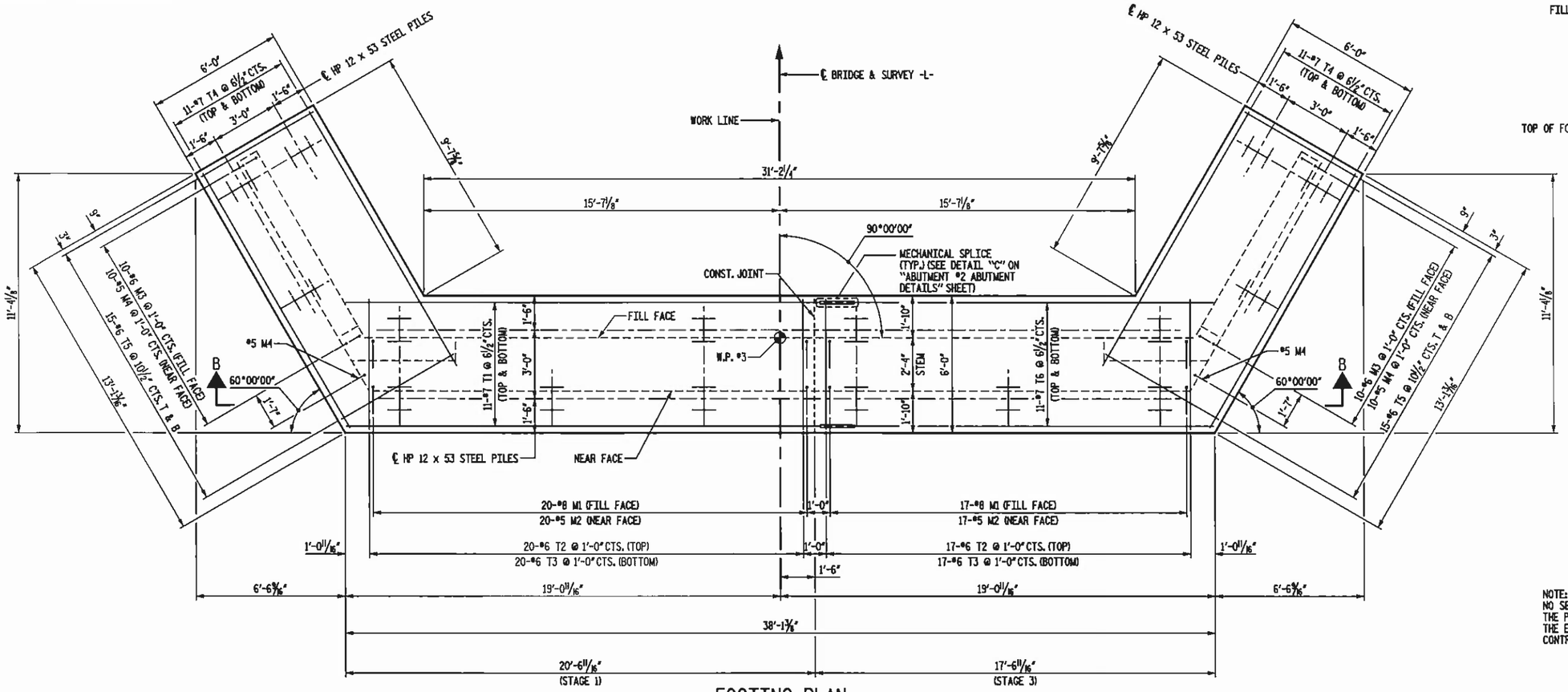

FOOTING PLAN

NOTES: "T & B" INDICATES TOP & BOTTOM

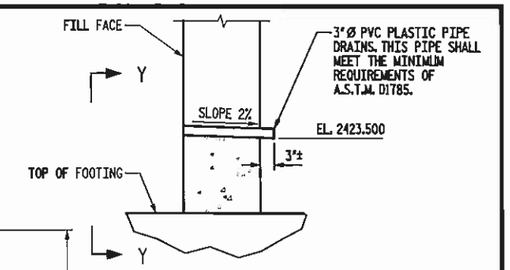

SECTION THRU ABUTMENT STEM

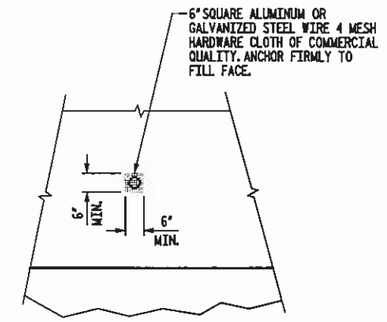

VIEW Y-Y

NOTE:
NO SEPARATE PAYMENT WILL BE MADE FOR FURNISHING AND INSTALLING THE PVC PLASTIC PIPE DRAINS, HARDWARE CLOTH AND FASTENERS. THE ENTIRE COST OF THIS WORK SHALL BE INCLUDED IN THE UNIT CONTRACT PRICE FOR THE SEVERAL PAY ITEMS.

PIPE DRAIN DETAILS

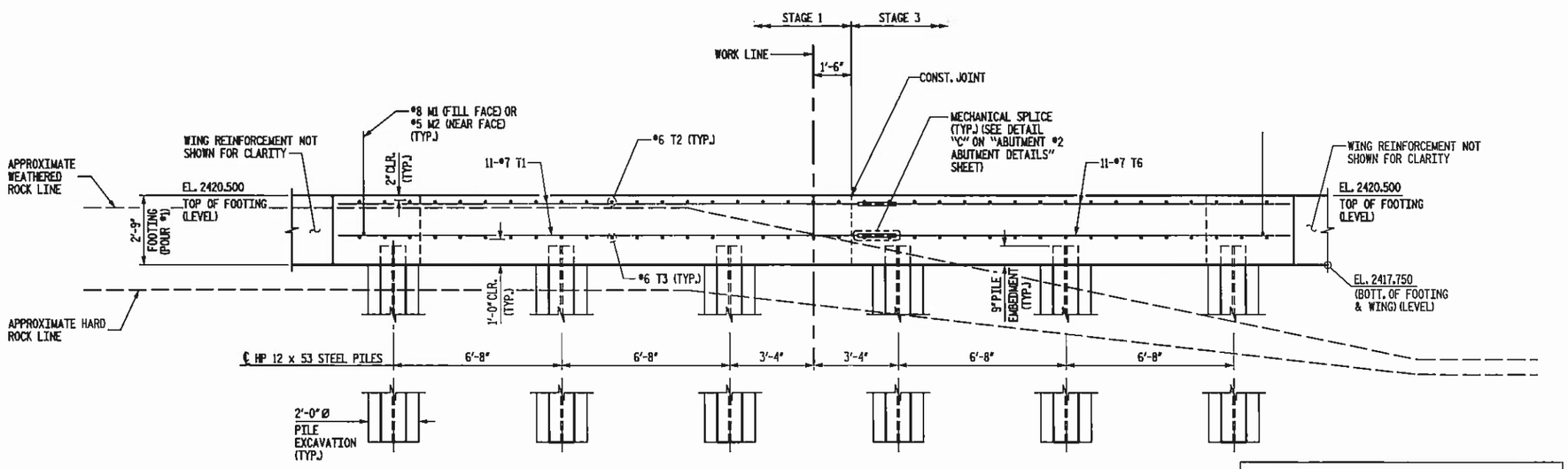

SECTION B-B

NOT TO SCALE

PROJECT NO. 42576
COUNTY: MITCHELL
STATION: 14+14.67
REPLACES BRIDGE NO. 177

STATE OF NORTH CAROLINA
DEPARTMENT OF TRANSPORTATION
RALEIGH

SUBSTRUCTURE
ABUTMENT #2
FOOTING DETAILS

Florence & Hutcheson
CONSULTING ENGINEERS
5121 Kingdom Way, Suite 100 Raleigh, NC 27607
NC License No: F-0258

NORTH CAROLINA PROFESSIONAL SEAL ENGINEER KAREN M. MOYER
10-4-10

REVISIONS						
NO.	BY	DATE	NO.	BY	DATE	
1			3			
2			4			

SHEET NO. 15
TOTAL SHEETS 31

DRAWN BY: D.H. CARTER DATE: SEPT. 2010
CHECKED BY: M.J. MOYER DATE: SEPT. 2010

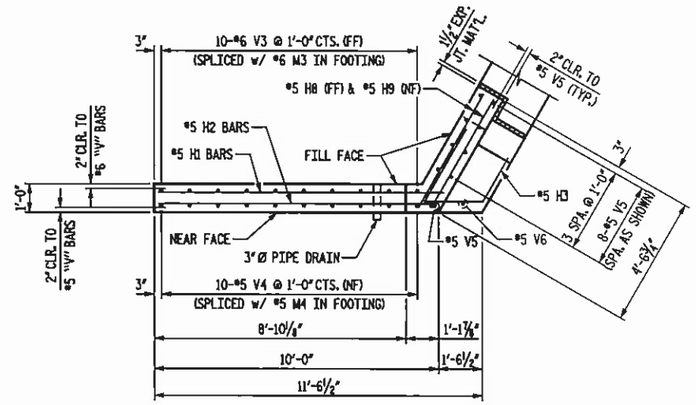

PLAN OF WING - W1

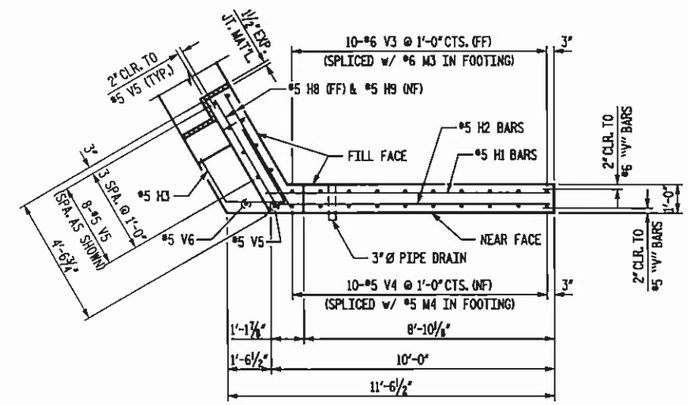

PLAN OF WING - W2

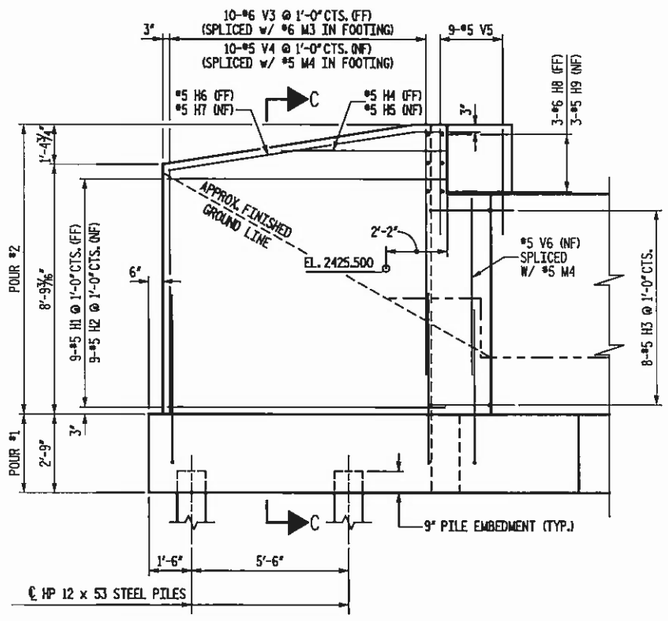

ELEVATION OF WING - W1

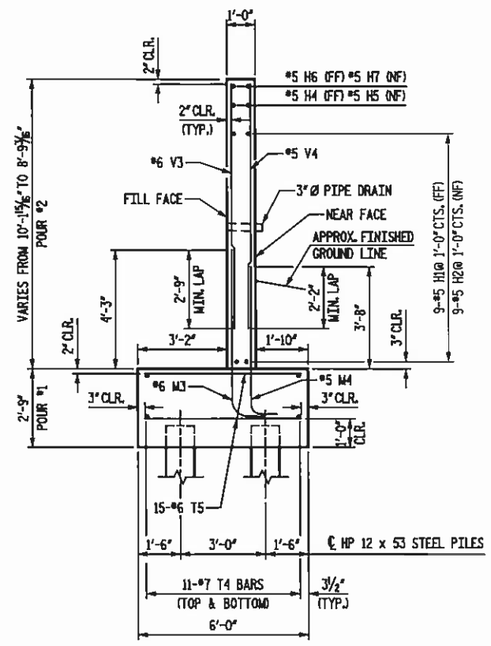

SECTION C-C

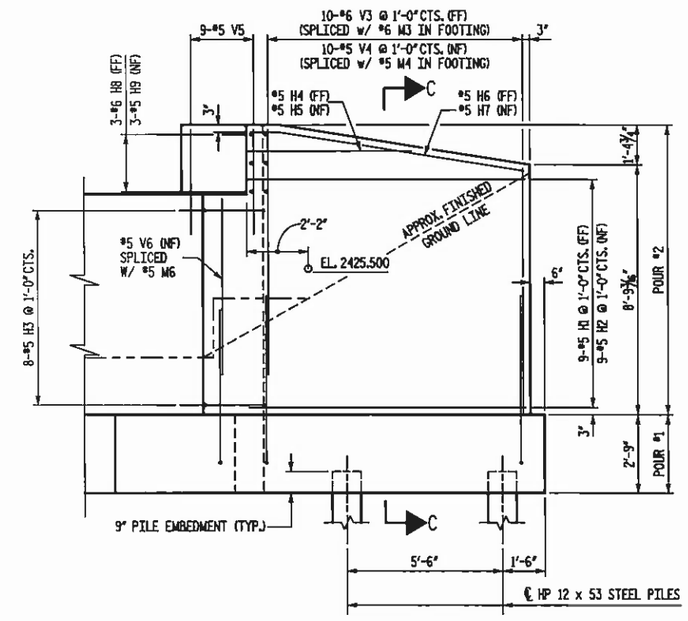

ELEVATION OF WING - W2

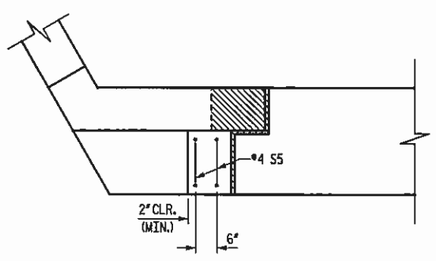

PARTIAL PLAN

NOTE:
(FF) DENOTES FILL FACE
(NF) DENOTES NEAR FACE

PROJECT NO. 42576
COUNTY: MITCHELL
STATION: 14+14.67
REPLACES BRIDGE NO. 177

STATE OF NORTH CAROLINA
DEPARTMENT OF TRANSPORTATION
RALEIGH

SUBSTRUCTURE
ABUTMENT #2
WINGWALL DETAILS

Florence & Hutcheson
CONSULTING ENGINEERS
5121 Kingdom Way, Suite 100 Raleigh, NC 27607
NC License No: F-0258

NORTH CAROLINA PROFESSIONAL SEAL ENGINEER KAREN M. MOBLEY
10-4-10

REVISIONS						
NO.	BY	DATE	NO.	BY	DATE	
1			3			
2			4			

SHEET NO. 16
TOTAL SHEETS 31

NOT TO SCALE

DRAWN BY: D.H. CARTER DATE: SEPT. 2010
CHECKED BY: M.J. MOYER DATE: SEPT. 2010

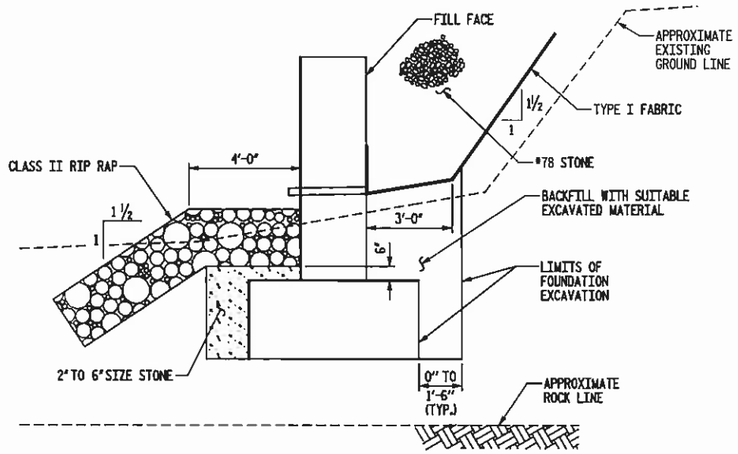

EXCAVATION AND EMBANKMENT AT ABUTMENT

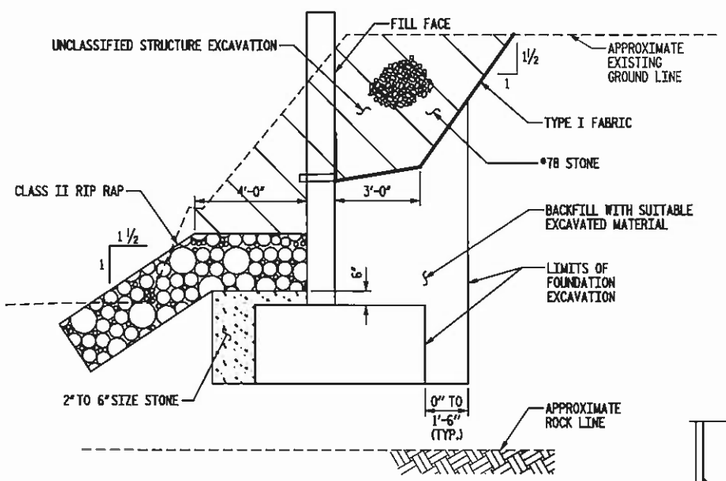

EXCAVATION AND EMBANKMENT AT WINGS

NOTES FOR SUBSTRUCTURE SCOUR PROTECTION

SUBSTRUCTURE SCOUR PROTECTION SHALL BE PROVIDED AS INDICATED IN THE PLANS. THE TWO TO SIX INCH SIZE STONE SHALL BE PLACED AFTER FOOTING FORMWORK HAS BEEN REMOVED AND WHILE THE EXCAVATION IS DEWATERED.

THE TWO TO SIX INCH SIZE SCOUR PROTECTION STONE SHALL BE HARD AND DURABLE IN NATURE. WHILE NO SPECIFIC GRADATION IS REQUIRED THE VARIOUS SIZES OF STONE SHALL BE REASONABLY EQUALLY DISTRIBUTED WITHIN THE REQUIRED SIZE RANGE. THE STONE SHALL BE ESSENTIALLY CUBICAL IN SHAPE.

THE COST OF THE WORK INCLUDING THE TWO TO SIX INCH SIZE STONE, *78M BAGGED STONE MATERIALS, EQUIPMENT, TOOLS, LABOR AND INCIDENTALS NECESSARY TO COMPLETE THE WORK SHALL BE INCLUDED IN THE LUMP SUM PRICE BID FOR PLACEMENT OF SUBSTRUCTURE. CLASS II RIP RAP SHALL BE PAID FOR AT THE UNIT PRICE BID FOR CLASS II RIP RAP PER TON. UNCLASSIFIED STRUCTURE EXCAVATION AND FOUNDATION EXCAVATION COSTS SHALL BE INCLUDED IN THE LUMP SUM PRICE FOR EXCAVATION AND EMBANKMENT.

*78 STONE BACKFILL AND FABRIC SHALL BE INCLUDED IN THE LUMP SUM PRICE BID FOR APPROACH SLABS.

DRAWN BY: D.H. CARTER DATE: SEPT. 2010
CHECKED BY: M.J. MOYER DATE: SEPT. 2010

BAR TYPES

ALL BAR DIMENSIONS ARE OUT TO OUT.

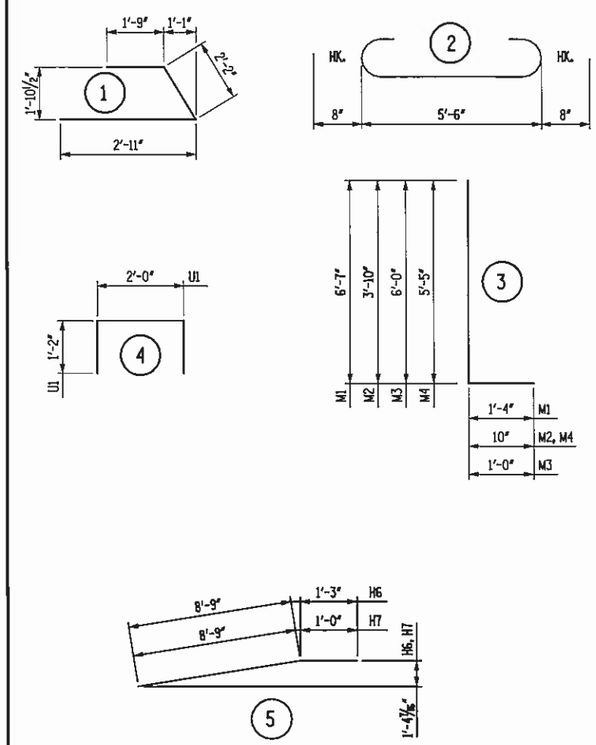

BILL OF MATERIAL

ABUTMENT #2 STAGE 1

BAR	NO.	SIZE	TYPE	LENGTH	WEIGHT
B1	20	#5	STR	20'-5"	426
D1	11	#6	STR	1'-6"	25
H1	9	#5	STR	10'-0"	94
H2	9	#5	STR	9'-9"	92
H3	8	#5	1	6'-10"	57
H4	1	#5	STR	6'-0"	6
H5	1	#5	STR	5'-9"	6
H6	1	#5	5	10'-0"	10
H7	1	#5	5	9'-9"	10
H8	3	#5	STR	4'-7"	14
H9	3	#5	STR	4'-4"	14
M1	20	#8	3	7'-11"	423
M2	20	#5	3	4'-8"	97
M3	10	#6	3	7'-0"	105
M4	11	#5	3	6'-3"	72
T1	22	#7	STR	21'-6"	967
T2	20	#6	STR	5'-6"	165
T3	20	#6	2	6'-10"	205
T4	22	#7	STR	12'-10"	577
T5	30	#6	STR	5'-6"	248
V1	20	#8	STR	7'-6"	401
V2	20	#5	STR	7'-6"	156
V3	10	#6	STR	8'-7"	129
V4	10	#5	STR	8'-7"	90
V5	9	#5	STR	3'-8"	34
V6	1	#5	STR	6'-2"	6
U1	20	#5	4	4'-4"	90

REINFORCING STEEL TOTAL	4,519	LBS.
POUR #1 FOOTING	18.3	CY
POUR #2 ABUTMENT & WING	16.9	CY
POUR #3 LATERAL GUIDE	0.1	CY
TOTAL	35.3	CY
PILE EXCAVATION IN SOIL	0.0	LF
PILE EXCAVATION NOT IN SOIL	80.0	LF

BILL OF MATERIAL

ABUTMENT #2 STAGE 3

BAR	NO.	SIZE	TYPE	LENGTH	WEIGHT
B2	20	#5	STR	15'-5"	322
D1	9	#6	STR	1'-6"	20
H1	9	#5	STR	10'-0"	94
H2	9	#5	STR	9'-9"	92
H3	8	#5	1	6'-10"	57
H4	1	#5	STR	6'-0"	6
H5	1	#5	STR	5'-9"	6
H6	1	#5	5	10'-0"	10
H7	1	#5	5	9'-9"	10
H8	3	#5	STR	4'-7"	14
H9	3	#5	STR	4'-4"	14
M1	17	#8	3	7'-11"	359
M2	17	#5	3	4'-8"	83
M3	10	#6	3	7'-0"	105
M4	11	#5	3	6'-3"	72
T2	17	#6	STR	5'-6"	140
T3	17	#6	2	6'-10"	174
T4	22	#7	STR	12'-10"	577
T5	30	#6	STR	5'-6"	248
T6	22	#7	STR	16'-6"	742
V1	17	#8	STR	7'-6"	340
V2	17	#5	STR	7'-6"	133
V3	10	#6	STR	8'-7"	129
V4	10	#5	STR	8'-7"	90
V5	9	#5	STR	3'-8"	34
V6	1	#5	STR	6'-2"	6
U1	17	#5	4	4'-4"	77

REINFORCING STEEL TOTAL	3,954	LBS.
POUR #1 FOOTING	16.5	CY
POUR #2 ABUTMENT & WING	14.9	CY
POUR #3 LATERAL GUIDE	0.1	CY
TOTAL	31.5	CY
PILE EXCAVATION IN SOIL	12.0	LF
PILE EXCAVATION NOT IN SOIL	68.0	LF

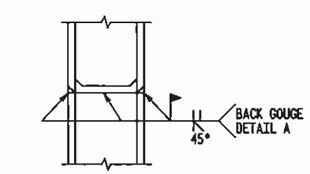

** PILE VERTICAL

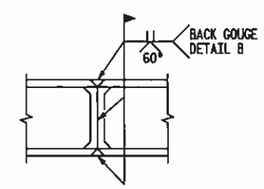

** PILE HORIZONTAL OR VERTICAL

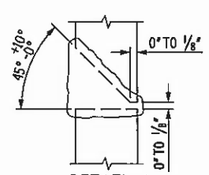

DETAIL A

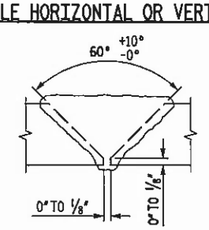

DETAIL B

** POSITION OF PILE DURING WELDING

PILE SPLICE DETAILS

NOT TO SCALE

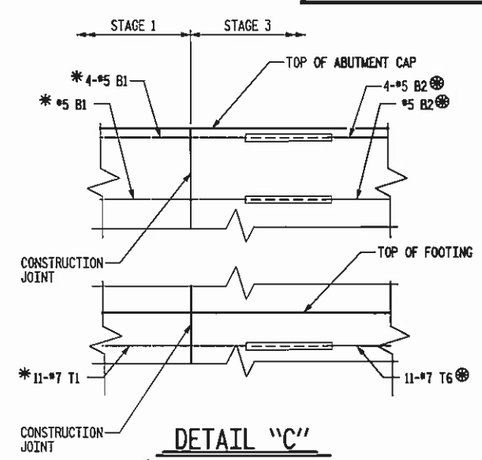

DETAIL "C"

* EXTEND ALL BARS IN STAGE 1 1'-0" MIN. BEYOND CONST. JOINT

⊛ PLACE ALL BARS IN STAGE 3 AT OR NEAR THE END OF BARS EXTENDING FROM STAGE 1.

Florence & Hutcheson
CONSULTING ENGINEERS
5121 Kingdom Way, Suite 100 Raleigh, NC 27607
NC License No: F-0258

NORTH CAROLINA PROFESSIONAL SEAL ENGINEER KAREN M. HONEY
10-4-10

PROJECT NO. 42576
COUNTY: MITCHELL
STATION: 14+14.67
REPLACES BRIDGE NO. 177

STATE OF NORTH CAROLINA
DEPARTMENT OF TRANSPORTATION
RALEIGH

SUBSTRUCTURE
ABUTMENT #2
ABUTMENT DETAILS

REVISIONS						SHEET NO.
NO.	BY	DATE	NO.	BY	DATE	17
1			3			TOTAL SHEETS
2			4			31

FILE NAME: p:\design_parts\structual\37\42576\37_structure\Abt-0125_Rev17.dgn
PLOT: 10/6/2010 11:02:07 AM Fc & Associates, P.C.

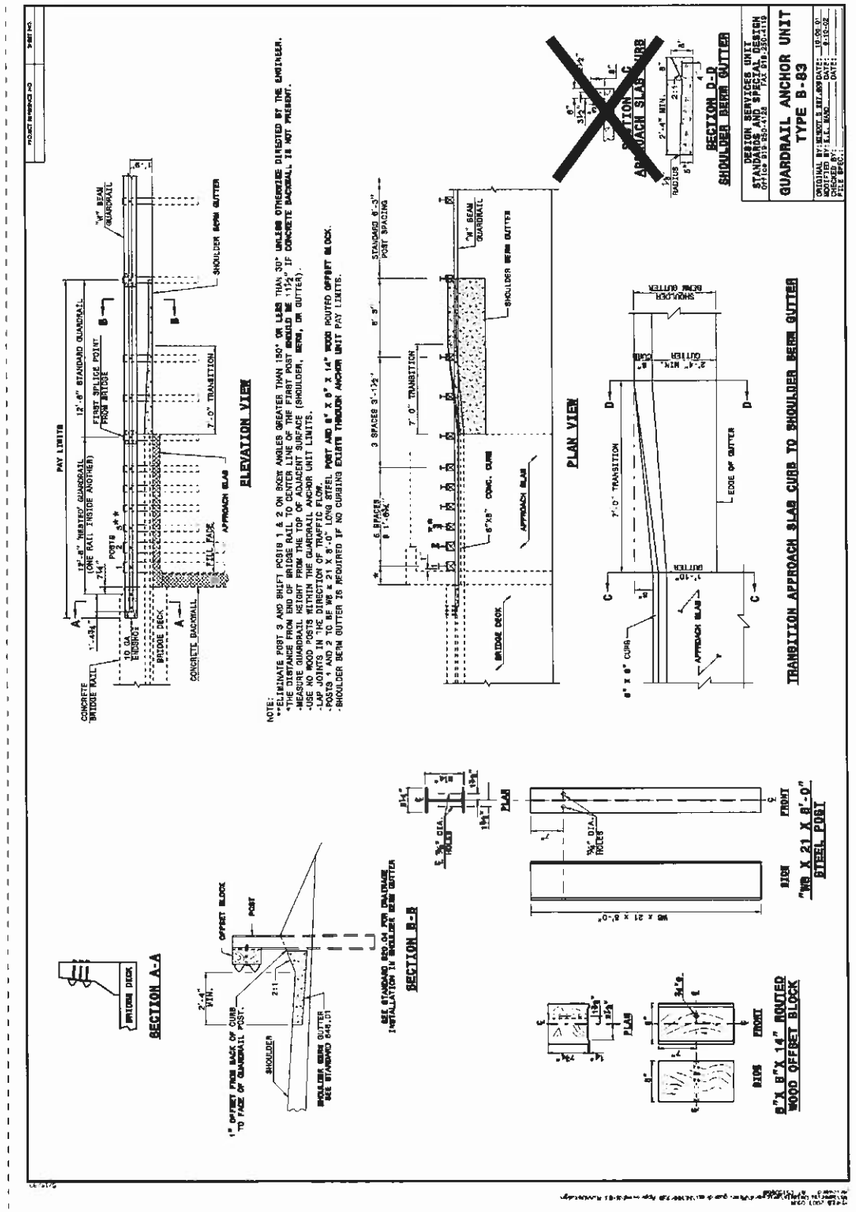

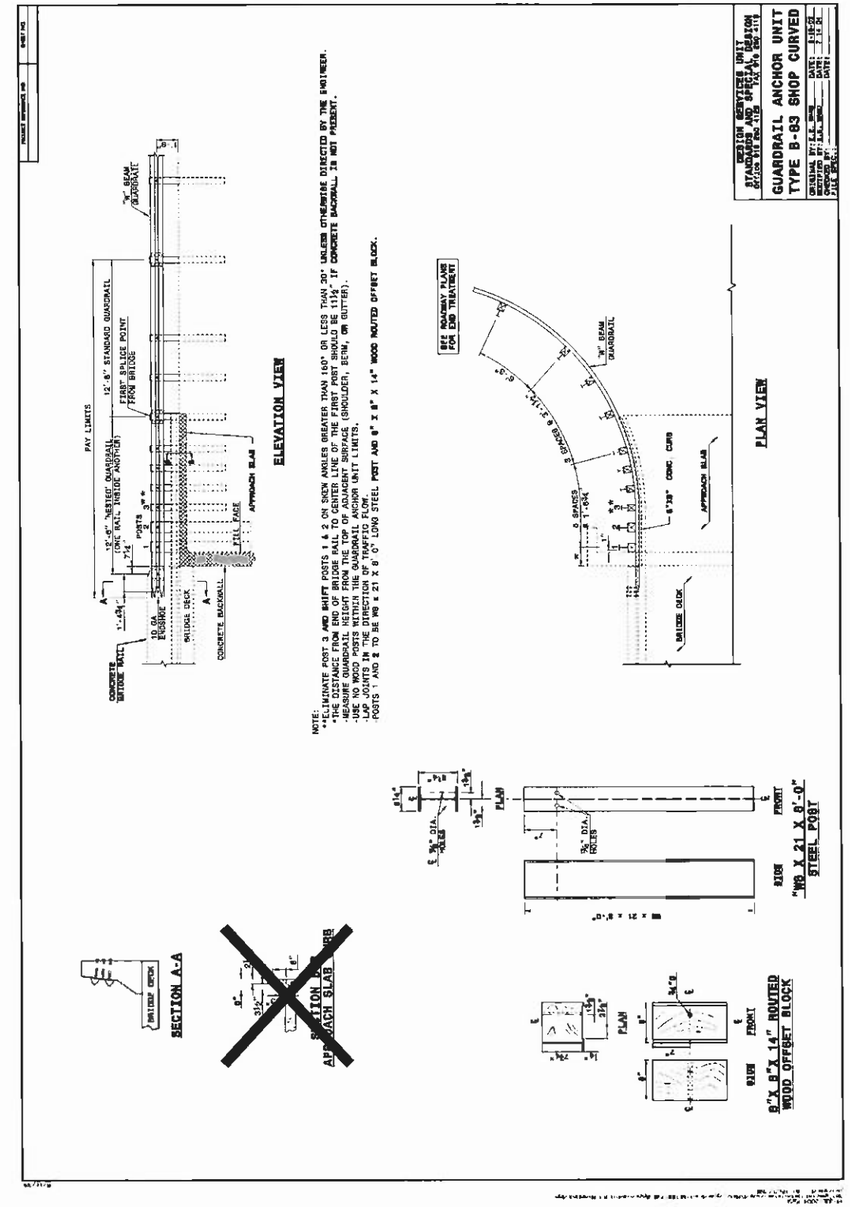

PROJECT NO. 42576
COUNTY: MITCHELL
STATION: 14+14.67
REPLACES BRIDGE NO. 177

STATE OF NORTH CAROLINA
DEPARTMENT OF TRANSPORTATION
RALEIGH

BRIDGE NO. 177 ON SR 1189
OVER CANE CREEK

REVISIONS						SHEET No.
NO.	BY	DATE	NO.	BY	DATE	18
1			3			TOTAL SHEETS
2			4			31

Florence & Hutcheson
CONSULTING ENGINEERS
5121 Kingdom Way, Suite 100 Raleigh, NC 27607
NC License No: F 0258

NORTH CAROLINA PROFESSIONAL SEAL ENGINEER KAREN M. MOREY
10-4-10

NOT TO SCALE

DRAWN BY: D.H. CARTER DATE: SEPT. 2010
CHECKED BY: M.J. MOYER DATE: SEPT. 2010

PLOT: 10/1/2010 1:49:00 PM Ko & Associates, P.C. FILE NAME: P:\BKprojects\Mitchell77\bk5125\Structures\BK-5125_Sht-18.dgn

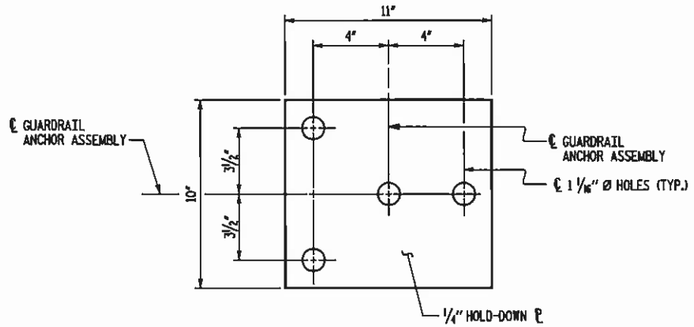

PLAN

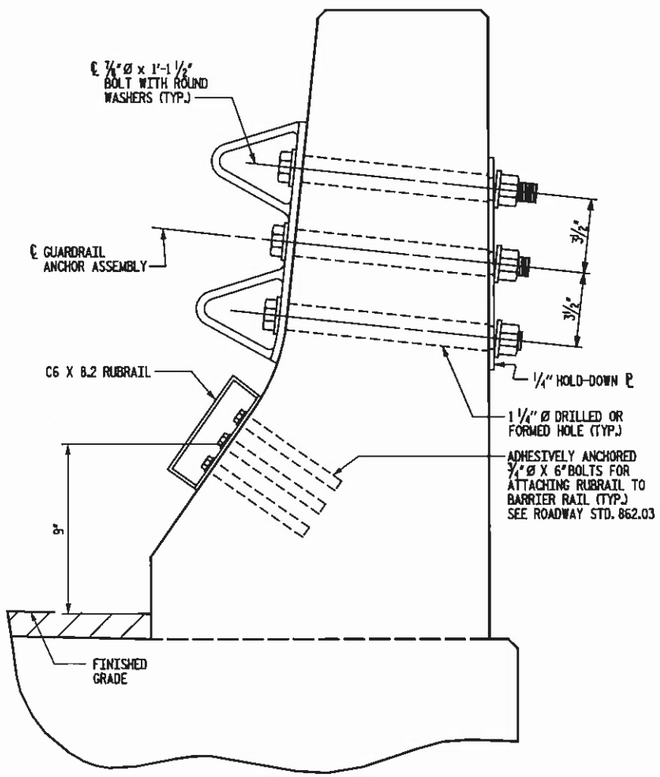

SECTION E-E

GUARDRAIL ANCHOR ASSEMBLY DETAILS

FOR CONCRETE BARRIER RAIL ONLY
(FOR LOCATION OF GUARDRAIL ANCHOR ASSEMBLY, SEE THIS SHEET)

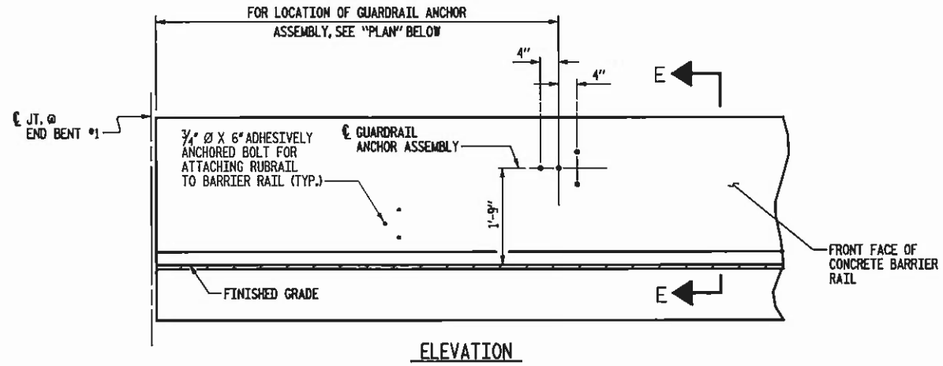

ELEVATION

FOR LOCATION OF RUBRAIL, SEE ROADWAY STD. 862.03

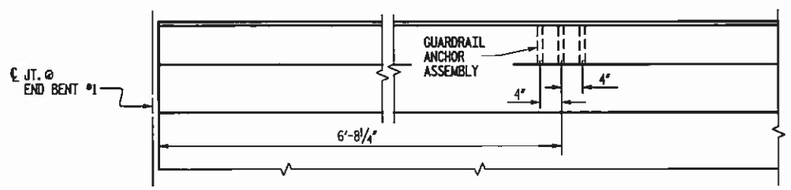

PLAN

LOCATION OF ANCHORS FOR GUARDRAIL

FOR CONCRETE BARRIER RAIL ONLY
END BENT #1 SHOWN, ABUTMENT #2 SIMILAR

NOTES

THE GUARDRAIL ANCHOR ASSEMBLY SHALL CONSIST OF A 1/4" HOLD DOWN PLATE AND 4-7/8" Ø BOLTS WITH NUTS AND WASHERS, RUBRAIL, AND ADHESIVELY ANCHORED BOLTS.

THE HOLD-DOWN PLATE SHALL CONFORM TO AASHTO M270 GRADE 36. AFTER FABRICATION, THE HOLD-DOWN PLATE SHALL BE HOT-DIP GALVANIZED IN ACCORDANCE WITH AASHTO M111.

BOLTS SHALL CONFORM TO THE REQUIREMENTS OF ASTM A307 AND NUTS SHALL CONFORM TO THE REQUIREMENTS OF AASHTO M291. BOLTS, NUTS AND WASHERS SHALL BE GALVANIZED. (AT THE CONTRACTOR'S OPTION, STAINLESS STEEL BOLTS, NUTS AND WASHERS MAY BE USED AS AN ALTERNATE FOR THE 7/8" Ø GALVANIZED BOLTS, NUTS AND WASHERS. THEY SHALL CONFORM TO OR EXCEED THE MECHANICAL REQUIREMENTS OF ASTM A307. THE USE OF THIS ALTERNATE SHALL BE APPROVED BY THE ENGINEER.)

THE GUARDRAIL ANCHOR ASSEMBLY IS REQUIRED AT ALL POINTS WHERE APPROACH GUARDRAIL IS TO BE ATTACHED TO THE END OF CONCRETE BARRIER RAIL. FOR POINTS OF ATTACHMENT, SEE SKETCH.

AFTER INSTALLATION, THE EXPOSED THREAD OF THE BOLT SHALL BE BURRED WITH A SHARP POINTED TOOL.

THE COST OF THE GUARDRAIL ANCHOR ASSEMBLY SHALL BE INCLUDED IN THE UNIT CONTRACT PRICE BID FOR CONCRETE BARRIER RAIL.

THE 1 1/4" Ø HOLES SHALL BE FORMED OR DRILLED WITH A CORE BIT. IMPACT TOOLS WILL NOT BE PERMITTED. ANY CONCRETE DAMAGED BY THIS WORK SHALL BE REPAIRED TO THE SATISFACTION OF THE ENGINEER.

THE C6 X 8.2 RUBRAIL IS TO BE ADHESIVELY ANCHORED TO THE RAIL USING THREE ¾"Ø X 6" BOLTS WITH WASHERS. LEVEL ONE FIELD TESTING IS REQUIRED, AND THE YIELD LOAD OF THE ¾"Ø BOLT IS 12 KIPS. FOR ADHESIVELY ANCHORED ANCHOR BOLTS OR DOWELS, SEE SPECIAL PROVISIONS. SEE ROADWAY STANDARD 862.03 FOR DETAILS AND LOCATION OF THE RUBRAIL.

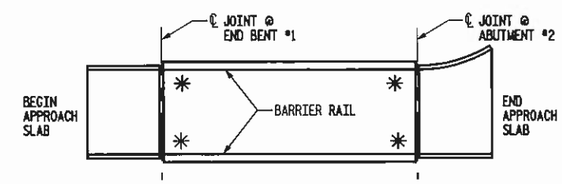

SKETCH SHOWING POINTS OF ATTACHMENTS

✳ DENOTES GUARDRAIL ANCHOR ASSEMBLY

PROJECT NO. 42576
COUNTY: MITCHELL
STATION: 14+14.67
REPLACES BRIDGE NO. 177

STATE OF NORTH CAROLINA
DEPARTMENT OF TRANSPORTATION
RALEIGH

SUPERSTRUCTURE
GUARDRAIL ANCHORAGE DETAILS

REVISIONS						SHEET NO.
NO.	BY	DATE	NO.	BY	DATE	19
1			3			TOTAL SHEETS
2			4			31

Florence & Hutcheson
CONSULTING ENGINEERS
5121 Kingdom Way, Suite 100 Raleigh, NC 27607
NC License No. F-0258

NORTH CAROLINA PROFESSIONAL SEAL ENGINEER KAREN M. MOREY
10-4-10

NOT TO SCALE

DRAWN BY: D.H. CARTER DATE: SEPT. 2010
CHECKED BY: M.J. MOYER DATE: SEPT. 2010

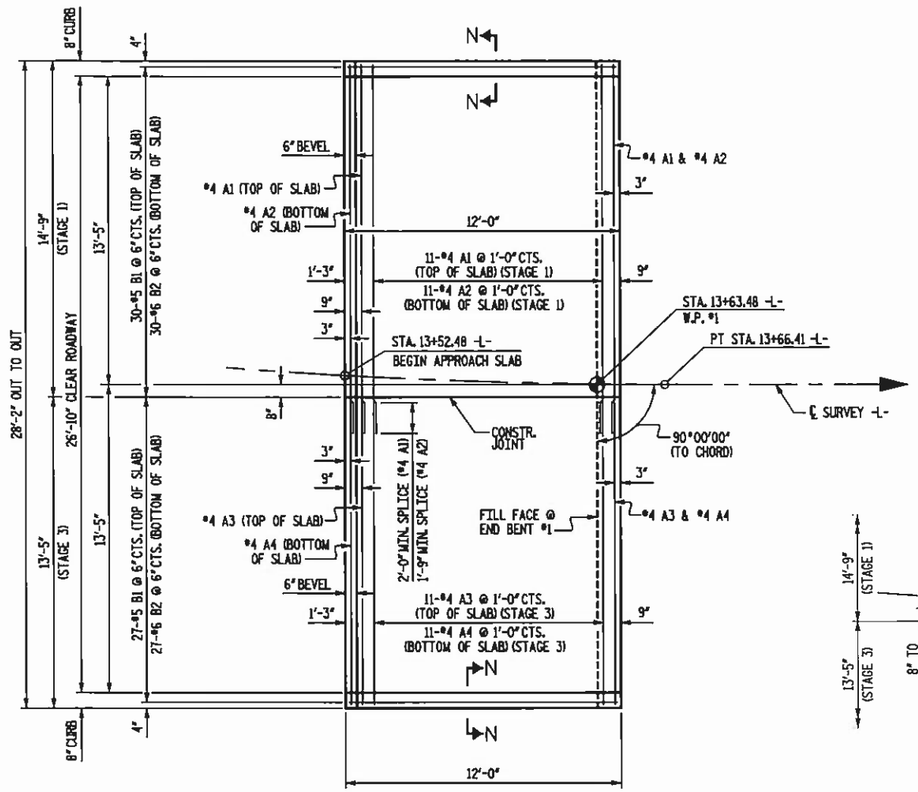

PLAN OF APPROACH SLAB AT END BENT #1

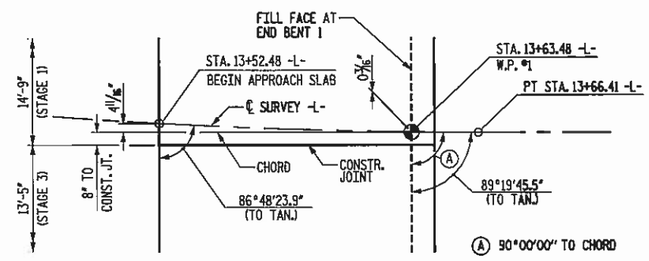

PLAN OF CONSTRUCTION JOINT AT END BENT #1

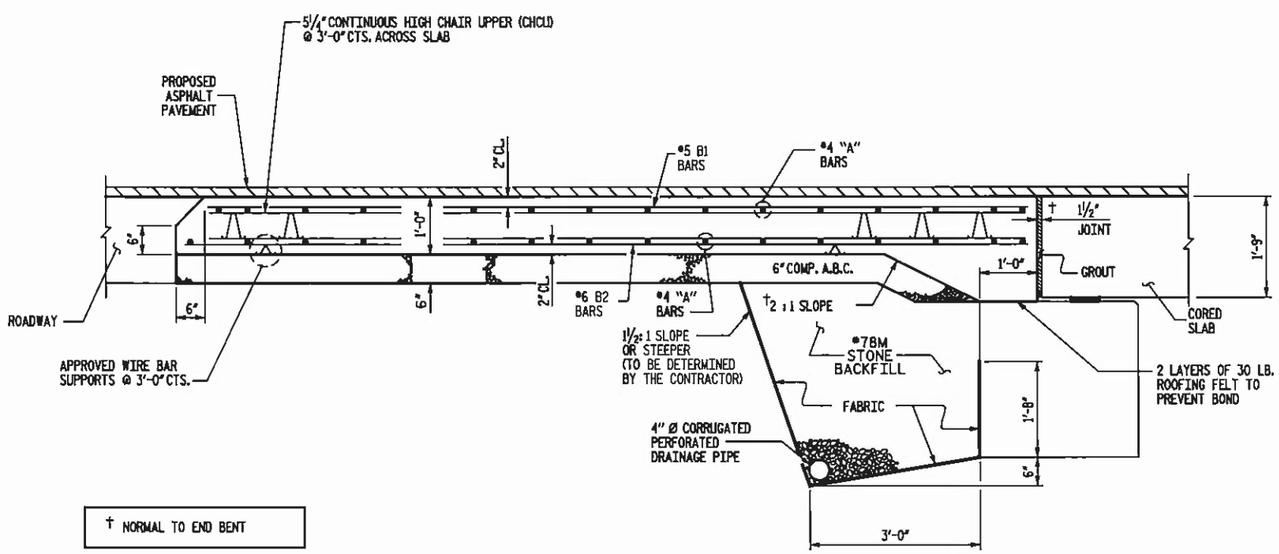

SECTION THRU SLAB AT END BENT 1

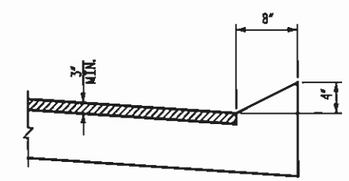

SECTION N-N

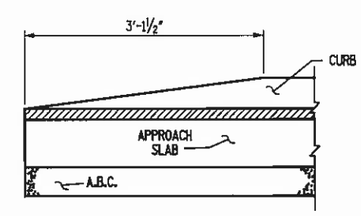

END OF CURB WITHOUT SHOULDER BERM GUTTER

CURB DETAILS

NOTES

FOR BRIDGE APPROACH FILL INCLUDING FABRIC, 4" Ø DRAINAGE PIPE, AND #78M STONE BACKFILL, SEE ROADWAY STANDARD DRAWINGS.

APPROACH SLAB SHALL NOT BE CONSTRUCTED PRIOR TO INSTALLATION OF CORED SLAB.

FABRIC SHALL BE TYPE 1 ENGINEERING FABRIC IN ACCORDANCE WITH THE STANDARD SPECIFICATIONS SECTION 1056.

#78M STONE BACKFILL (CLASS V SELECT MATERIAL) SHALL BE IN ACCORDANCE WITH STANDARD SPECIFICATIONS SECTION 1016.

#78M STONE BACKFILL IS TO BE CONTINUOUS ALONG FILL FACE OF END BENT CAP FROM OUTSIDE EDGE TO OUTSIDE EDGE OF APPROACH SLAB.

FOR THE 4" Ø DRAINAGE PIPE OUTLET(S), SEE ROADWAY STANDARD DRAWINGS.

#78 STONE BACKFILL, 4" Ø DRAINAGE PIPE AND FABRIC SHALL BE INCLUDED IN THE LUMP SUM PRICE BID FOR APPROACH SLABS.

AREA BETWEEN THE WINGWALL AND APPROACH SLAB SHALL BE GRADED TO DRAIN THE WATER AWAY FROM THE FILL FACE OF THE BRIDGE AND SHALL BE PAVED.

THE 6" COMP. A.B.C. SHALL BE FLUSH WITH THE ROADWAY END OF THE APPROACH SLAB AND SHALL EXTEND 1'-0" OUTSIDE OF EACH EDGE OF THE APPROACH SLAB.

THE CONTRACTOR MAY USE 4" TYPE B-25.0B ASPHALT CONCRETE BASE COURSE IN LIEU OF 6" COMP. A.B.C. IF THIS OPTION IS USED, THE BASE COURSE SHALL BE FLUSH WITH THE ROADWAY END OF THE APPROACH SLAB, AND THE WIDTH SHALL BE THE SAME AS THAT OF THE APPROACH SLAB.

THE CONTRACTOR MAY USE 5" CLASS "A" CONCRETE BASE IN LIEU OF 6" COMP. A.B.C. IF THIS OPTION IS USED, THE CONCRETE BASE SHALL BE FLUSH WITH THE ROADWAY END OF THE APPROACH SLAB, AND THE WIDTH SHALL BE THE SAME AS THAT OF THE APPROACH SLAB. THE CONCRETE SHALL BE FINISHED TO A SMOOTH SURFACE AND A LAYER OF 30 LB ROOFING FELT SHALL BE PLACED BETWEEN THE CONCRETE BASE AND THE APPROACH SLAB TO PREVENT BOND. THE APPROACH SLAB SHALL NOT BE CAST UNTIL THE CONCRETE BASE HAS REACHED AN AGE OF THREE CURING DAYS.

FOR JOINT DETAILS, SEE "PRESTRESSED CONCRETE CORED SLAB UNIT" SHEETS.

THE JOINT AT THE END BENT SHALL BE GROUTED AS SOON AS PRACTICAL AFTER THE CONSTRUCTION OF THE APPROACH SLABS.

APPROACH SLAB GROOVING IS NOT REQUIRED.

BILL OF MATERIAL

APPROACH SLAB AT END BENT 1 STAGE 1

BAR	NO.	SIZE	TYPE	LENGTH	WEIGHT
*A1	13	#4	STR	16'-10"	146
A2	13	#4	STR	16'-7"	144
*B1	30	#5	STR	11'-3"	352
B2	30	#6	STR	11'-8"	526
REINFORCING STEEL				LBS.	670
* EPOXY COATED REINFORCING STEEL				LBS.	498
CLASS AA CONCRETE AT END BENT #1				C.Y.	7.5

BILL OF MATERIAL

APPROACH SLAB AT END BENT 1 STAGE 3

BAR	NO.	SIZE	TYPE	LENGTH	WEIGHT
*A3	13	#4	STR	13'-2"	114
A4	13	#4	STR	13'-2"	114
*B1	27	#5	STR	11'-3"	317
B2	27	#6	STR	11'-8"	473
REINFORCING STEEL				LBS.	587
* EPOXY COATED REINFORCING STEEL				LBS.	431
CLASS AA CONCRETE AT END BENT #1				C.Y.	6.8

PROJECT NO. 42576
COUNTY: MITCHELL
STATION: 14+14.67
REPLACES BRIDGE NO. 177

STATE OF NORTH CAROLINA
DEPARTMENT OF TRANSPORTATION
RALEIGH

BRIDGE APPROACH SLAB FOR PRESTRESSED CONCRETE CORED SLAB AT END BENT #1 (SUB-REGIONAL TIER)

Florence & Hutcheson
CONSULTING ENGINEERS
5121 Kingdom Way, Suite 100 Raleigh, NC 27607
NC License No. F-0258

NORTH CAROLINA PROFESSIONAL SEAL ENGINEER KAREN M. MOREY
10-4-10

REVISIONS						SHEET NO.
NO.	BY	DATE	NO.	BY	DATE	20
1			3			TOTAL SHEETS
2			4			31

DRAWN BY: D.H. CARTER DATE: SEPT. 2010
CHECKED BY: M.J. MOYER DATE: SEPT. 2010

NOT TO SCALE

PROJECT REFERENCE NO.	SHEET NO.
BK-5125	20A

PLAN VIEW
12' APPROACH SLAB

STATE OF NORTH CAROLINA DEPT. OF TRANSPORTATION DIVISION OF HIGHWAYS RALEIGH, N.C.

ENGLISH DETAIL DRAWING FOR
BRIDGE APPROACH FILLS
CORED SLAB & BOX BEAM BRIDGES
SUB REGIONAL TIER

SHEET 1 OF 2
422D11

SECTION A-A

SECTION B-B

12' APPROACH SLAB

STATE OF NORTH CAROLINA DEPT. OF TRANSPORTATION DIVISION OF HIGHWAYS RALEIGH, N.C.

ENGLISH DETAIL DRAWING FOR
BRIDGE APPROACH FILLS
CORED SLAB & BOX BEAM BRIDGES
SUB REGIONAL TIER

SHEET 2 OF 2
422D11

PROJECT SERVICES UNIT
STANDARDS AND SPECIAL DESIGN
Office 919-250-4128 FAX 919-250-4119

BRIDGE APPROACH FILLS
CORED SLAB & BOX BEAM BRIDGES
SUB REGIONAL TIER

ORIGINAL BY: K. A. Kempf DATE: 8-10-08
MODIFIED BY: DATE:
CHECKED BY: DATE: 4/27/09
FILE SPEC.: kkempf\english\bridge approach fills.dgn

26-JUN-2008 15:32
a:\contyrpcfg\contyrpcfg\special details\kkempf\english\bridge approach fill.dgn
kkempf AT PS237494

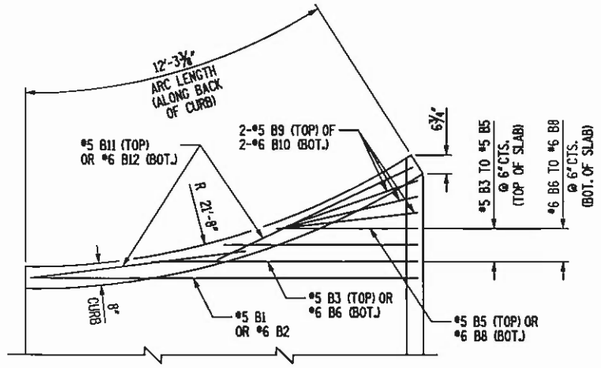

PLAN

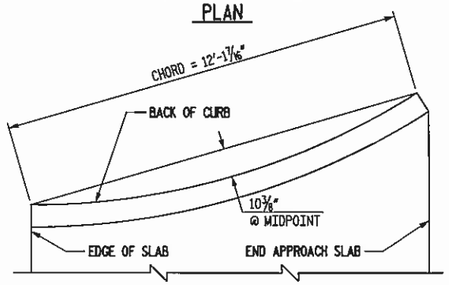

CURVE ORDINATE

LEFT CURB DETAILS AT ABUTMENT #2

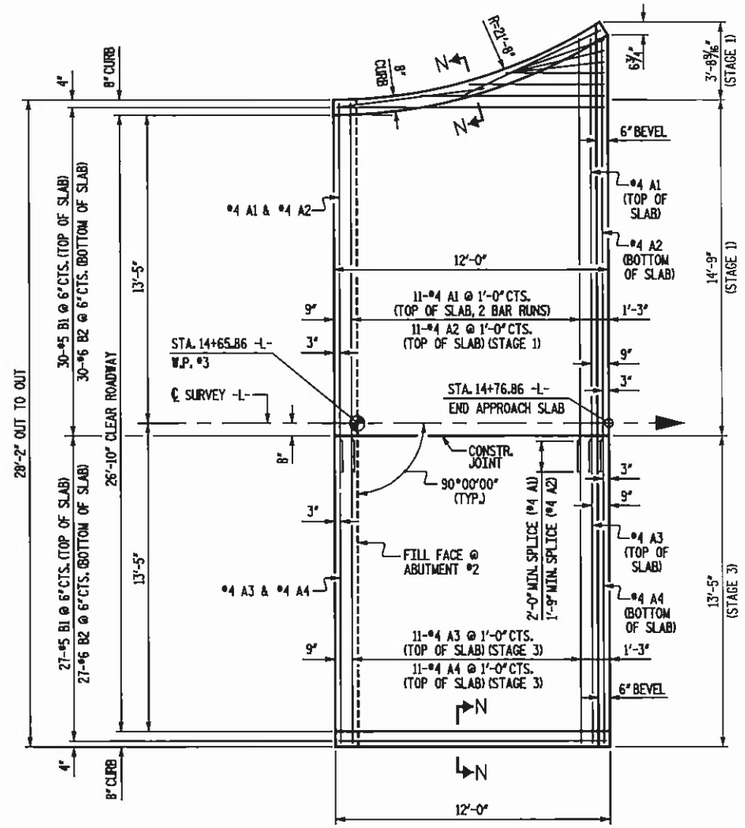

PLAN OF APPROACH SLAB AT ABUTMENT #2

NOTES

FOR BRIDGE APPROACH FILL INCLUDING FABRIC AND #78M STONE BACKFILL, SEE ROADWAY STANDARD DRAWINGS.

APPROACH SLAB SHALL NOT BE CONSTRUCTED PRIOR TO INSTALLATION OF CORED SLAB.

FABRIC SHALL BE TYPE 1 ENGINEERING FABRIC IN ACCORDANCE WITH THE STANDARD SPECIFICATIONS SECTION 1056.

#78M STONE BACKFILL (CLASS V SELECT MATERIAL) SHALL BE IN ACCORDANCE WITH STANDARD SPECIFICATIONS SECTION 1016.

#78M STONE BACKFILL IS TO BE CONTINUOUS ALONG FILL FACE OF ABUTMENT BREASTWALL FROM OUTSIDE EDGE TO OUTSIDE EDGE OF APPROACH SLAB.

#78 STONE BACKFILL AND FABRIC SHALL BE INCLUDED IN THE LUMP SUM PRICE BID FOR APPROACH SLABS.

AREA BETWEEN THE WINGWALL AND APPROACH SLAB SHALL BE GRADED TO DRAIN THE WATER AWAY FROM THE FILL FACE OF THE BRIDGE AND SHALL BE PAVED.

THE 6" COMP. A.B.C. SHALL BE FLUSH WITH THE ROADWAY END OF THE APPROACH SLAB AND SHALL EXTEND 1'-0" OUTSIDE OF EACH EDGE OF THE APPROACH SLAB.

THE CONTRACTOR MAY USE 4" TYPE B-25.0B ASPHALT CONCRETE BASE COURSE IN LIEU OF 6" COMP. A.B.C. IF THIS OPTION IS USED, THE BASE COURSE SHALL BE FLUSH WITH THE ROADWAY END OF THE APPROACH SLAB, AND THE WIDTH SHALL BE THE SAME AS THAT OF THE APPROACH SLAB.

THE CONTRACTOR MAY USE 5" CLASS "A" CONCRETE BASE IN LIEU OF 6" COMP. A.B.C. IF THIS OPTION IS USED, THE CONCRETE BASE SHALL BE FLUSH WITH THE ROADWAY END OF THE APPROACH SLAB, AND THE WIDTH SHALL BE THE SAME AS THAT OF THE APPROACH SLAB. THE CONCRETE SHALL BE FINISHED TO A SMOOTH SURFACE AND A LAYER OF 30 LB ROOFING FELT SHALL BE PLACED BETWEEN THE CONCRETE BASE AND THE APPROACH SLAB TO PREVENT BOND. THE APPROACH SLAB SHALL NOT BE CAST UNTIL THE CONCRETE BASE HAS REACHED AN AGE OF THREE CURING DAYS.

FOR JOINT DETAILS, SEE "PRESTRESSED CONCRETE CORED SLAB UNIT" SHEETS.

THE JOINT AT THE ABUTMENT SHALL BE GROUTED AS SOON AS PRACTICAL AFTER THE CONSTRUCTION OF THE APPROACH SLAB.

APPROACH SLAB GROOVING IS NOT REQUIRED.

BILL OF MATERIAL

APPROACH SLAB AT ABUTMENT #2 STAGE 1

BAR	NO.	SIZE	TYPE	LENGTH	WEIGHT
*A1	13	#4	STR	19'-9"	172
A2	13	#4	STR	19'-6"	169
*B1	30	#5	STR	11'-3"	352
B2	30	#6	STR	11'-8"	526
*B3	1	#5	STR	7'-7"	8
*B4	1	#5	STR	5'-10"	6
*B5	1	#5	STR	4'-3"	4
B6	1	#6	STR	8'-0"	12
B7	1	#6	STR	5'-10"	9
B8	1	#6	STR	4'-3"	6
*B9	3	#5	STR	4'-2"	13
B10	3	#6	STR	4'-2"	19
*B11	2	#5	STR	6'-6"	14
B12	2	#6	STR	6'-6"	20
REINFORCING STEEL				LBS.	761
* EPOXY COATED REINFORCING STEEL				LBS.	569
CLASS AA CONCRETE AT ABUTMENT #2				C.Y.	8.0

BILL OF MATERIAL

APPROACH SLAB AT ABUTMENT #2 STAGE 3

BAR	NO.	SIZE	TYPE	LENGTH	WEIGHT
*A3	13	#4	STR	13'-2"	114
A4	13	#4	STR	13'-2"	114
*B1	27	#5	STR	11'-3"	317
B2	27	#6	STR	11'-8"	473
REINFORCING STEEL				LBS.	587
* EPOXY COATED REINFORCING STEEL				LBS.	431
CLASS AA CONCRETE AT ABUTMENT #2				C.Y.	6.8

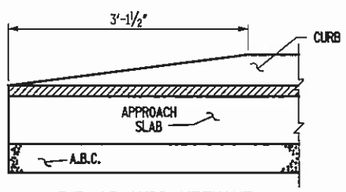

END OF CURB WITHOUT SHOULDER BERM GUTTER

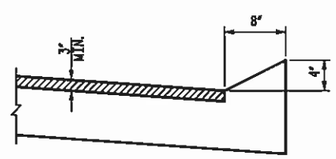

SECTION N-N

CURB DETAILS

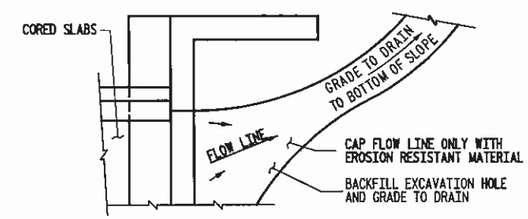

NOTE: IF THE APPROACH SLAB IS NOT CONSTRUCTED IMMEDIATELY AFTER THE BACKFILLING OF THE END BENT EXCAVATION, GRADE TO DRAIN TO THE BOTTOM OF THE SLOPE AND PROVIDE EROSION RESISTANT MATERIAL, SUCH AS FIBERGLASS ROVING OR AS DIRECTED BY THE ENGINEER TO PREVENT SOIL EROSION AND TO PROTECT THE AREA ADJACENT TO THE STRUCTURE. THE CONTRACTOR WILL BE REQUIRED TO REMOVE THESE MATERIALS PRIOR TO CONSTRUCTION OF THE APPROACH SLAB.

TEMPORARY DRAINAGE DETAIL

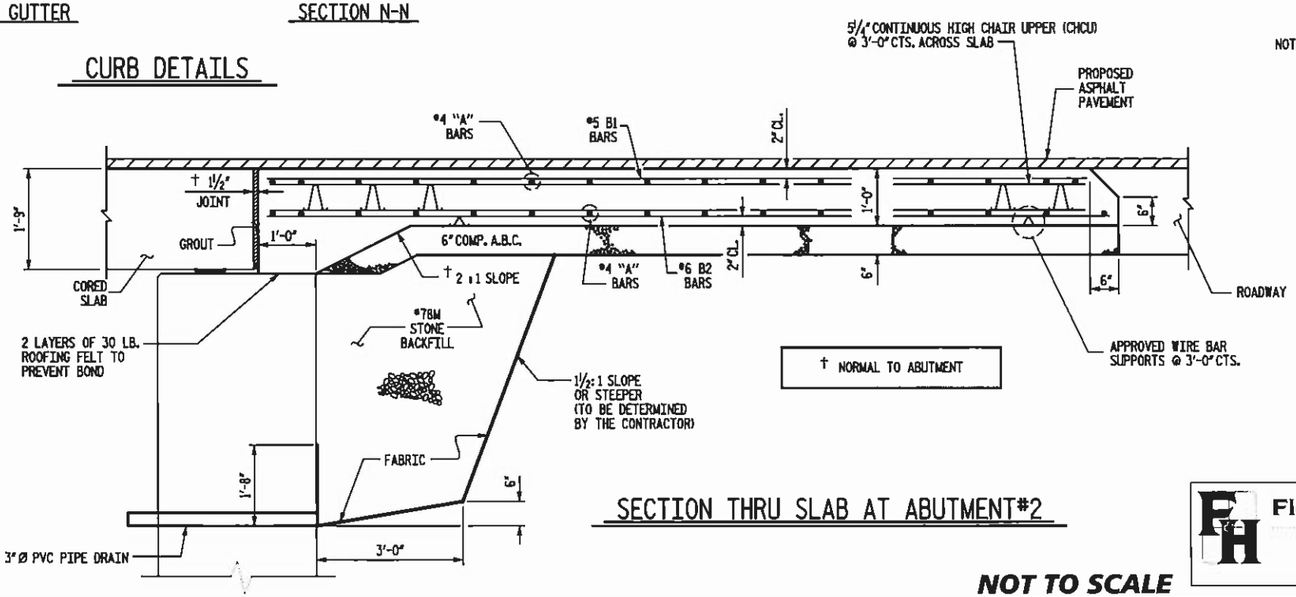

SECTION THRU SLAB AT ABUTMENT#2

NOT TO SCALE

PROJECT NO. 42576
COUNTY: MITCHELL
STATION: 14+14.67
REPLACES BRIDGE NO. 177

STATE OF NORTH CAROLINA
DEPARTMENT OF TRANSPORTATION
RALEIGH

BRIDGE APPROACH SLAB FOR PRESTRESSED CONCRETE CORED SLAB AT ABUTMENT #2 (SUB-REGIONAL TIER)

Florence & Hutcheson
CONSULTING ENGINEERS
5121 Kingdom Way, Suite 100 Raleigh, NC 27607
NC License No: F-0268

NORTH CAROLINA PROFESSIONAL SEAL ENGINEER KAREN M. MOREY
10-4-10

REVISIONS						SHEET NO.
NO.	BY	DATE	NO.	BY	DATE	21
1			3			TOTAL SHEETS
2			4			31

DRAWN BY: D.H. CARTER DATE: SEPT. 2010
CHECKED BY: M.J. MOYER DATE: SEPT. 2010

8/17/99

DATUM DESCRIPTION

THE LOCALIZED COORDINATE SYSTEM DEVELOPED FOR THIS PROJECT IS BASED ON THE STATE PLANE COORDINATES ESTABLISHED BY OTHERS FOR MONUMENT "BL-2"
WITH NAD 83 STATE PLANE GRID COORDINATES OF
NORTHING: 839421.8129(M) EASTING: 1063183.48 (M)
THE AVERAGE COMBINED GRID FACTOR USED ON THIS PROJECT (GROUND TO GRID) IS: 0.99980809738
THE N.C. LAMBERT GRID BEARING AND LOCALIZED HORIZONTAL GROUND DISTANCE FROM "BL-2" TO -L- STATION 10+00.00 IS
S 72°23'03.22" W 356.88'
ALL LINEAR DIMENSIONS ARE LOCALIZED HORIZONTAL DISTANCES
VERTICAL DATUM USED IS NAVD 88

-L-

PI Sta 11+18.58	PI Sta 11+81.75	PI Sta 13+18.34
Δ = 5° 04' 30.9" (RT)	Δ = 5° 22' 51.9" (RT)	Δ = 22° 19' 11.6" (LT)
D = 14° 19' 26.2"	D = 14° 19' 26.2"	D = 22° 55' 05.9"
L = 35.43'	L = 37.57'	L = 97.39'
T = 17.73'	T = 18.80'	T = 49.32'
R = 400.00'	R = 400.00'	R = 250.00'

	PAVEMENT SCHEDULE
C	2 1/2" SURFACE COURSE, TYPE SF9.5A
E	5 1/2" BASE COURSE, TYPE B25.0B
T	EARTH MATERIAL
U	EXISTING PAVEMENT

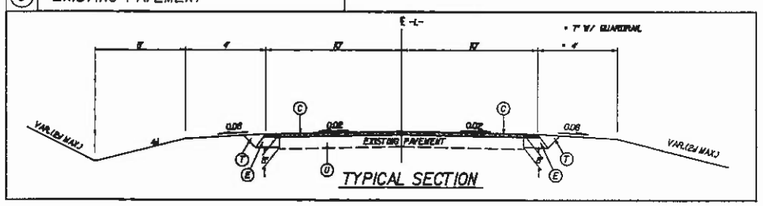

RIGHT OF WAY AREA DATA

PARCEL NO.	PROPERTY OWNERS NAME	TOTAL ACREAGE	AREA TAKEN	AREA REMAINING RIGHT	AREA REMAINING LEFT	CONSTR. EASEMENT	PERMANENT DRAINAGE EASEMENT	TEMPORARY DRAINAGE EASEMENT
1	ROBERT HUGES & wife WILMA HUGES		1205.72 SF			6495.57 SF		
2	JACK DOWELL & wife IRMA DOWELL		560.10 SF			955.18 SF		
3	JACK McKINNEY & wife BILLIE JUNE McKINNEY		2289.86 SF			806.28 SF		

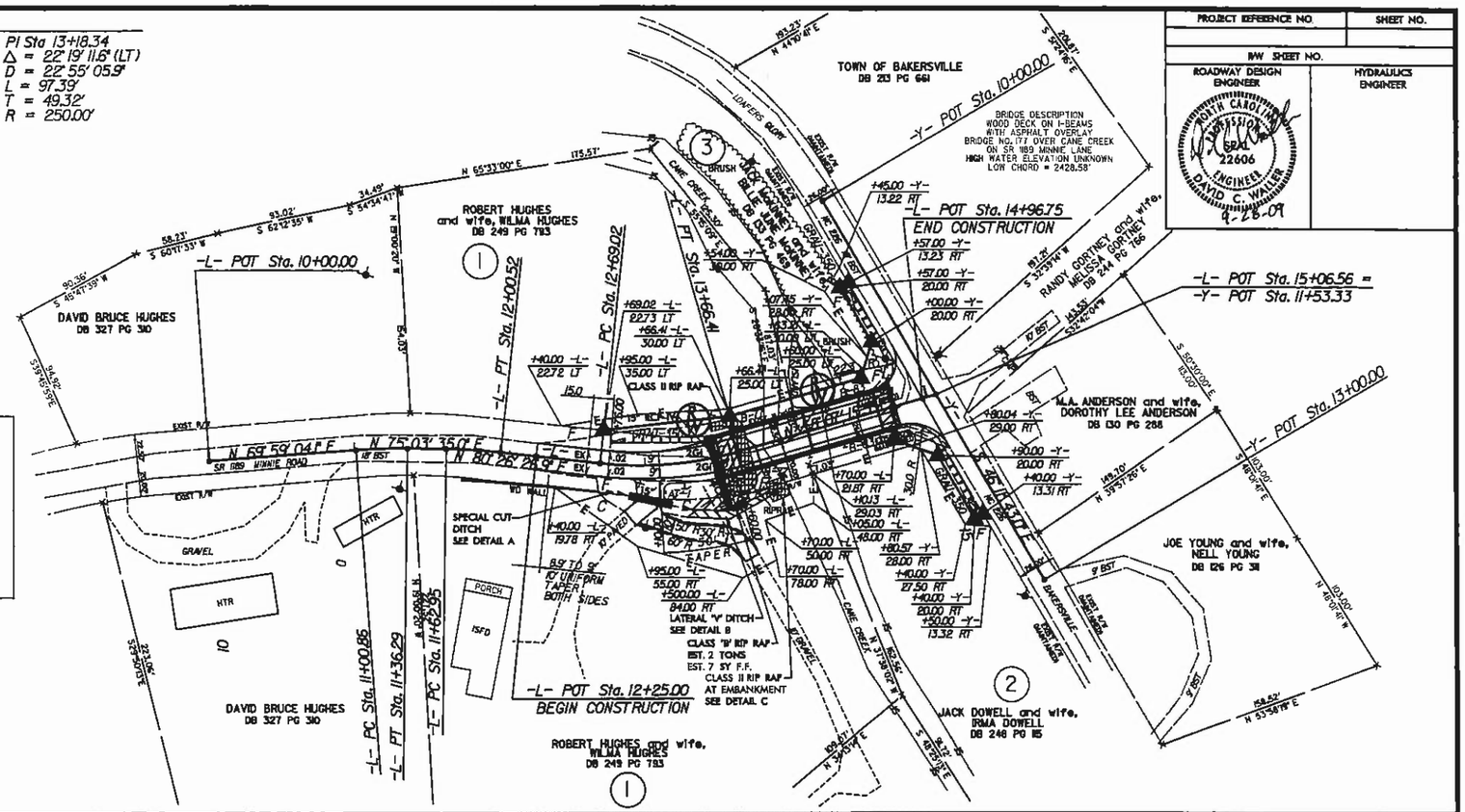

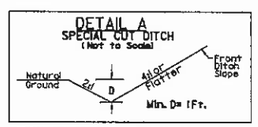

FROM STA. 12+75 TO STA. 13+25 -L- RT

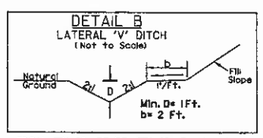

FROM STA. 13+25 TO STA. 13+78 -L- RT

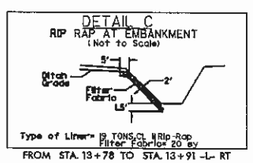

FROM STA. 13+78 TO STA. 13+91 -L- RT

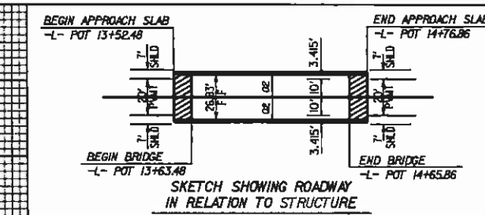

PROJECT NO.	42576
COUNTY:	MITCHELL
STATION:	14+14.67
REPLACES BRIDGE NO. 177	

STATE OF NORTH CAROLINA
DEPARTMENT OF TRANSPORTATION
RALEIGH

BRIDGE NO. 177 ON SR 1189
OVER CANE CREEK

Florence & Hutcheson
CONSULTING ENGINEERS
5121 Kingdom Way, Suite 100 Raleigh, NC 27607
NC License No. F-0586

REVISIONS						
NO.	BY	DATE	NO.	BY	DATE	
1			3			
2			4			

SHEET NO. 22
TOTAL SHEETS 31

PROJECT REFERENCE NO. | SHEET NO.
R/W SHEET NO.
ROADWAY DESIGN ENGINEER | HYDRAULICS ENGINEER
NORTH CAROLINA PROFESSIONAL SEAL ENGINEER 22606 DAVID C. WALLER 9-28-09

REVISIONS

8/28/2009
R:\Roadway\Proj\BK5125_rdu_pst_04.dgn
Florence & Hutcheson, Inc.

PROJECT REFERENCE NO.	SHEET NO.
BK-5125	
R/W SHEET NO.	

NORTH CAROLINA PROFESSIONAL SEAL 15876 ENGINEER MICHAEL T. KIEPPA
10-4-10

ROADWAY STANDARD DRAWINGS

THE FOLLOWING ROADWAY STANDARDS AS APPEAR IN "ROADWAY STANDARD DRAWINGS"- ROADWAY DESIGN UNIT-N.C. DEPARTMENT OF TRANSPORTATION-RALEIGH, N.C., DATED JANUARY 2002 ARE APPLICABLE TO THIS PROJECT AND BY REFERENCE HEREBY ARE CONSIDERED A PART OF THESE PLANS:

STD. NO.	TITLE
1101.02	TEMPORARY LANE CLOSURES
1101.03	TEMPORARY ROAD CLOSURES
1101.04	TEMPORARY SHOULDER CLOSURES
1101.11	TRAFFIC CONTROL DESIGN TABLES
1110.01	STATIONARY WORK ZONE SIGNS
1110.02	PORTABLE WORK ZONE SIGNS
1145.01	BARRICADES
1150.01	FLAGGERS
1160.01	TEMPORARY CRASH CUSHION
1170.01	PORTABLE CONCRETE BARRIER
1205.01	PAVEMENT MARKINGS - LINE TYPES & OFFSETS
1205.02	PAVEMENT MARKINGS - 2 LANE & MULTILANE ROADWAYS
1205.12	PAVEMENT MARKINGS - BRIDGES
1250.01	PAVEMENT MARKER SPACING
1251.01	RAISED PAVEMENT MARKERS (TEMPORARY & PERMANENT)
1261.01	GUARDRAIL & BARRIER DELINEATOR SPACING
1261.02	GUARDRAIL & BARRIER DELINEATOR TYPES
1262.01	GUARDRAIL END DELINEATION

INDEX OF SHEETS

SHEET NO.	TITLE
23	LIST OF APPLICABLE ROADWAY STANDARD DRAWINGS, LEGEND, PAV'T MARKING SCHEDULE AND INDEX OF SHEETS
24	GENERAL NOTES
25	PHASE I PHASING AND OVERVIEW
26	PHASE II PHASING AND OVERVIEW
27	PAVEMENT MARKING DETAIL
28	ADVANCE WARNING WORK ZONE SIGNS FOR TWO- WAY UNDIVIDED ROADWAYS

PAV'T MARKING SCHEDULE

SYMBOL	DESCRIPTION	QUANTITY BREAKDOWN	PAY ITEM	TOTAL QUANTITY
		PAVEMENT MARKING LINES		
			PAINT (4")	
PA	WHITE EDGELINE 2X	2,374 LF		
PI	YELLOW DOUBLE CENTER LINE 2X	1,052 LF		
			TOTAL	3,426 LF
			PAINT (24")	
P4	WHITE STOP BAR 2X	14 LF		
			TOTAL	14 LF
		PAVEMENT MARKERS		
			PERMANENT RAISED	
MA	YELLOW & YELLOW	4 EA		
			TOTAL	4 EA
			TEMPORARY RAISED	
MM	CRYSTAL/CRYSTAL	66 EA		
			TOTAL	66 EA

LEGEND

GENERAL

- DIRECTION OF TRAFFIC FLOW
- NORTH ARROW
- PROPOSED PVMT.
- EXIST. PVMT.
- PROPOSED CONSTRUCTION
- REMOVAL OF EXIST. PAVEMENT

TRAFFIC CONTROL DEVICES

- TYPE I BARRICADE
- TYPE II BARRICADE
- TYPE III BARRICADE
- CONE
- DRUM
- FLASHING ARROW PANEL (TYPE C)
- TYPE 'B' WARNING LIGHT
- STATIONARY SIGN
- PORTABLE SIGN
- WARNING FLAGS
- CRASH CUSHION
- CHANGEABLE MESSAGE SIGN
- TRUCK MOUNTED IMPACT ATTENUATOR (TMIA)
- POLICE
- FLAGGER
- DRUM (PROFILE)

PAVEMENT MARKINGS

- CRYSTAL PAVEMENT MARKER
- YELLOW/YELLOW PAVEMENT MARKER
- CRYSTAL/RED PAVEMENT MARKER
- PAVEMENT MARKING SYMBOLS

PROJECT NO. 42576
COUNTY: MITCHELL
STATION: 14+14.67
REPLACES BRIDGE NO. 177

STATE OF NORTH CAROLINA
DEPARTMENT OF TRANSPORTATION
RALEIGH

BRIDGE NO. 177 ON SR 1189
OVER CANE CREEK

Florence & Hutcheson
CONSULTING ENGINEERS
5121 Kingdom Way, Suite 100 Raleigh, NC 27607

REVISIONS						SHEET NO.
NO.	BY	DATE	NO.	BY	DATE	23
1			3			TOTAL SHEETS
2			4			31

PROJECT REFERENCE NO.	SHEET NO.
BK-5125	
R/W SHEET NO.	

NORTH CAROLINA PROFESSIONAL SEAL 15876 ENGINEER MICHAEL T. RZEPKA
10-4-10

PROJECT NOTES

GENERAL NOTES

CHANGES MAY BE REQUIRED WHEN PHYSICAL DIMENSIONS IN THE DETAIL DRAWINGS, STANDARD DETAILS, AND ROADWAY DETAILS ARE NOT ATTAINABLE TO MEET FIELD CONDITIONS OR RESULT IN DUPLICATE OR UNDESIRED OVERLAPPING OF DEVICES. MODIFICATION MAY INCLUDE: MOVING, SUPPLEMENTING, COVERING, OR REMOVAL OF DEVICES AS DIRECTED BY THE ENGINEER.

THE FOLLOWING GENERAL NOTES APPLY AT ALL TIMES FOR THE DURATION OF THE CONSTRUCTION PROJECT EXCEPT WHEN OTHERWISE NOTED IN THE PLAN OR DIRECTED BY THE ENGINEER.

LANE AND SHOULDER CLOSURE REQUIREMENTS

A) REMOVE LANE CLOSURE DEVICES FROM THE LANE WHEN WORK IS NOT BEING PERFORMED BEHIND THE LANE CLOSURE OR WHEN A LANE CLOSURE IS NO LONGER NEEDED OR AS DIRECTED BY THE ENGINEER.

B) WHEN PERSONNEL AND/OR EQUIPMENT ARE WORKING ON THE SHOULDER ADJACENT TO AN UNDIVIDED FACILITY AND WITHIN 5 FT OF AN OPEN TRAVEL LANE, CLOSE THE NEAREST OPEN TRAVEL LANE USING ROADWAY STANDARD DRAWING NO. 1101.02 UNLESS THE WORK AREA IS PROTECTED BY BARRIER OR GUARDRAIL.

C) WHEN PERSONNEL AND/OR EQUIPMENT ARE WORKING WITHIN A LANE OF TRAVEL OF AN UNDIVIDED OR DIVIDED FACILITY, CLOSE THE LANE ACCORDING TO THE TRAFFIC CONTROL PLANS, ROADWAY STANDARD DRAWINGS, OR AS DIRECTED BY THE ENGINEER. CONDUCT THE WORK SO THAT ALL PERSONNEL AND/OR EQUIPMENT REMAIN WITHIN THE CLOSED TRAVEL LANE.

PAVEMENT EDGE DROP OFF REQUIREMENTS

D) BACKFILL AT A 6:1 SLOPE UP TO THE EDGE AND ELEVATION OF EXISTING PAVEMENT IN AREAS ADJACENT TO AN OPENED TRAVEL LANE THAT HAS AN EDGE OF PAVEMENT DROP-OFF AS FOLLOWS:

BACKFILL DROP-OFFS THAT EXCEED 2 INCHES ON ROADWAYS WITH POSTED SPEED LIMITS OF 45 MPH OR GREATER.

BACKFILL DROP-OFFS THAT EXCEED 3 INCHES ON ROADWAYS WITH POSTED SPEED LIMITS LESS THAN 45 MPH.

BACKFILL WITH SUITABLE COMPACTED MATERIAL, AS APPROVED BY THE ENGINEER, AT NO EXPENSE TO THE DEPARTMENT.

E) DO NOT EXCEED A DIFFERENCE OF 2 INCHES IN ELEVATION BETWEEN OPEN LANES OF TRAFFIC FOR NOMINAL LIFTS OF 1.5 INCHES. INSTALL ADVANCE WARNING "UNEVEN LANES" SIGNS (W8-11) IN ADVANCE AND A MINIMUM OF EVERY HALF MILE THROUGHOUT THE UNEVEN AREA.

TRAFFIC PATTERN ALTERATIONS

F) NOTIFY THE ENGINEER TWENTY ONE (21) CALENDAR DAYS PRIOR TO ANY TRAFFIC PATTERN ALTERATION.

SIGNING

G) INSTALL ADVANCE WORK ZONE WARNING SIGNS WHEN WORK IS WITHIN 40 FT FROM THE EDGE OF TRAVEL LANE AND NO MORE THAN THREE (3) DAYS PRIOR TO THE BEGINNING OF CONSTRUCTION.

H) ENSURE ALL NECESSARY SIGNING IS IN PLACE PRIOR TO ALTERING ANY TRAFFIC PATTERN.

TRAFFIC BARRIER

I) INSTALL TEMPORARY BARRIER ACCORDING TO THE TRAFFIC CONTROL PLANS A MAXIMUM OF TWO (2) WEEKS PRIOR TO BEGINNING WORK IN ANY LOCATION. ONCE TEMPORARY BARRIER IS INSTALLED AT ANY LOCATION PROCEED IN A CONTINUOUS MANNER TO COMPLETE THE PROPOSED WORK IN THAT LOCATION UNLESS OTHERWISE STATED IN THE TRAFFIC CONTROL PLANS OR AS DIRECTED BY THE ENGINEER.

DO NOT PLACE BARRIER DIRECTLY ON ANY SURFACE OTHER THAN ASPHALT OR CONCRETE.

ONCE TEMPORARY BARRIER IS INSTALLED AT ANY LOCATION AND NO WORK IS PERFORMED BEHIND THE TEMPORARY BARRIER FOR A PERIOD LONGER THAN TWO (2) MONTHS, REMOVE/RESET TEMPORARY BARRIER AT NO COST TO THE DEPARTMENT UNLESS OTHERWISE STATED IN THE TRAFFIC CONTROL PLANS, TEMPORARY BARRIER IS PROTECTING A HAZARD, OR AS DIRECTED BY THE ENGINEER.

INSTALL TEMPORARY BARRIER WITH THE TRAFFIC FLOW BEGINNING WITH THE UPSTREAM SIDE OF TRAFFIC. REMOVE TEMPORARY BARRIER AGAINST THE TRAFFIC FLOW BEGINNING WITH THE DOWNSTREAM SIDE OF TRAFFIC.

INSTALL AND SPACE DRUMS NO GREATER THAN TWICE THE POSTED SPEED LIMIT (MPH) TO CLOSE OR KEEP THE SECTION OF THE ROADWAY CLOSED UNTIL THE TEMPORARY BARRIER CAN BE PLACED OR AFTER THE TEMPORARY BARRIER IS REMOVED.

J) PROTECT THE APPROACH END OF PORTABLE CONCRETE BARRIER AT ALL TIMES DURING THE INSTALLATION AND REMOVAL OF THE BARRIER BY EITHER A TRUCK MOUNTED IMPACT ATTENUATOR (MAXIMUM 72 HOURS) OR A TEMPORARY CRASH CUSHION.

PROTECT THE APPROACH END OF PORTABLE CONCRETE BARRIER FROM ONCOMING TRAFFIC AT ALL TIMES BY A TEMPORARY CRASH CUSHION UNLESS THE APPROACH END OF PORTABLE CONCRETE BARRIER IS OFFSET FROM ONCOMING TRAFFIC AS FOLLOWS OR AS SHOWN IN THE PLANS:

POSTED SPEED LIMIT	MINIMUM OFFSET
40 OR LESS	15 FT
45 - 50	20 FT
55	25 FT
60 MPH or HIGHER	30 FT

TRAFFIC CONTROL DEVICES

K) SPACE CHANNELIZING DEVICES IN WORK AREAS NO GREATER IN FEET THAN TWICE THE POSTED SPEED LIMIT (MPH), EXCEPT 10 FT ON-CENTER IN RADII, AND 3 FT OFF THE EDGE OF AN OPEN TRAVELWAY WHEN LANE CLOSURES ARE NOT IN EFFECT. WHEN SKINNY DRUMS ARE ALLOWED REFER TO SECTION 1180 OF STANDARD SPECIFICATIONS FOR ROADS AND STRUCTURES OR AS SHOWN IN THE PLANS.

PAVEMENT MARKINGS AND MARKERS

L) INSTALL PAVEMENT MARKINGS AND PAVEMENT MARKERS ON THE FINAL SURFACE AS FOLLOWS:

ROAD NAME	MARKING	MARKER
SR 1189 (MINNIE ROAD)	PAINT	PERMANENT RAISED

M) INSTALL TEMPORARY PAVEMENT MARKINGS AND TEMPORARY PAVEMENT MARKERS ON INTERIM LAYERS OF PAVEMENT AS FOLLOWS:

ROAD NAME	MARKING	MARKER
SR 1189 (MINNIE ROAD)	PAINT	TEMPORARY RAISED

N) PLACE TWO APPLICATIONS OF PAINT PAVEMENT MARKINGS ON THE FINAL WEARING SURFACE. PLACE THE SECOND APPLICATION OF PAINT UPON SUFFICIENT DRYING TIME OF THE FIRST.

O) PLACE ONE APPLICATION OF PAINT FOR TEMPORARY TRAFFIC PATTERNS. PLACE A SECOND APPLICATION OF PAINT SIX (6) MONTHS AFTER THE INITIAL APPLICATION AND EVERY SIX MONTHS AS DIRECTED BY THE ENGINEER.

P) TIE PROPOSED PAVEMENT MARKING LINES TO EXISTING PAVEMENT MARKING LINES.

Q) REMOVE/REPLACE ANY CONFLICTING/DAMAGED PAVEMENT MARKINGS AND MARKERS BY THE END OF EACH DAY'S OPERATION.

LOCAL NOTES

1) CONTRACTOR TO MAINTAIN DRIVEWAY ACCESS AT ALL TIMES.

PROJECT NO. 42576
COUNTY: MITCHELL
STATION: 14+14.67
REPLACES BRIDGE NO. 177

STATE OF NORTH CAROLINA
DEPARTMENT OF TRANSPORTATION
RALEIGH

BRIDGE NO. 177 ON SR 1189
OVER CANE CREEK

Florence & Hutcheson
CONSULTING ENGINEERS
5121 Kingdom Way, Suite 100 Raleigh, NC 27607

REVISIONS						SHEET NO.
NO.	BY	DATE	NO.	BY	DATE	24
1			3			TOTAL SHEETS
2			4			31

PROJECT REFERENCE NO.	SHEET NO.
BK-5125	
R/W SHEET NO.	

NORTH CAROLINA PROFESSIONAL SEAL 15876 ENGINEER MICHAEL T. REEPS
10-4-10

PHASE I OVERVIEW

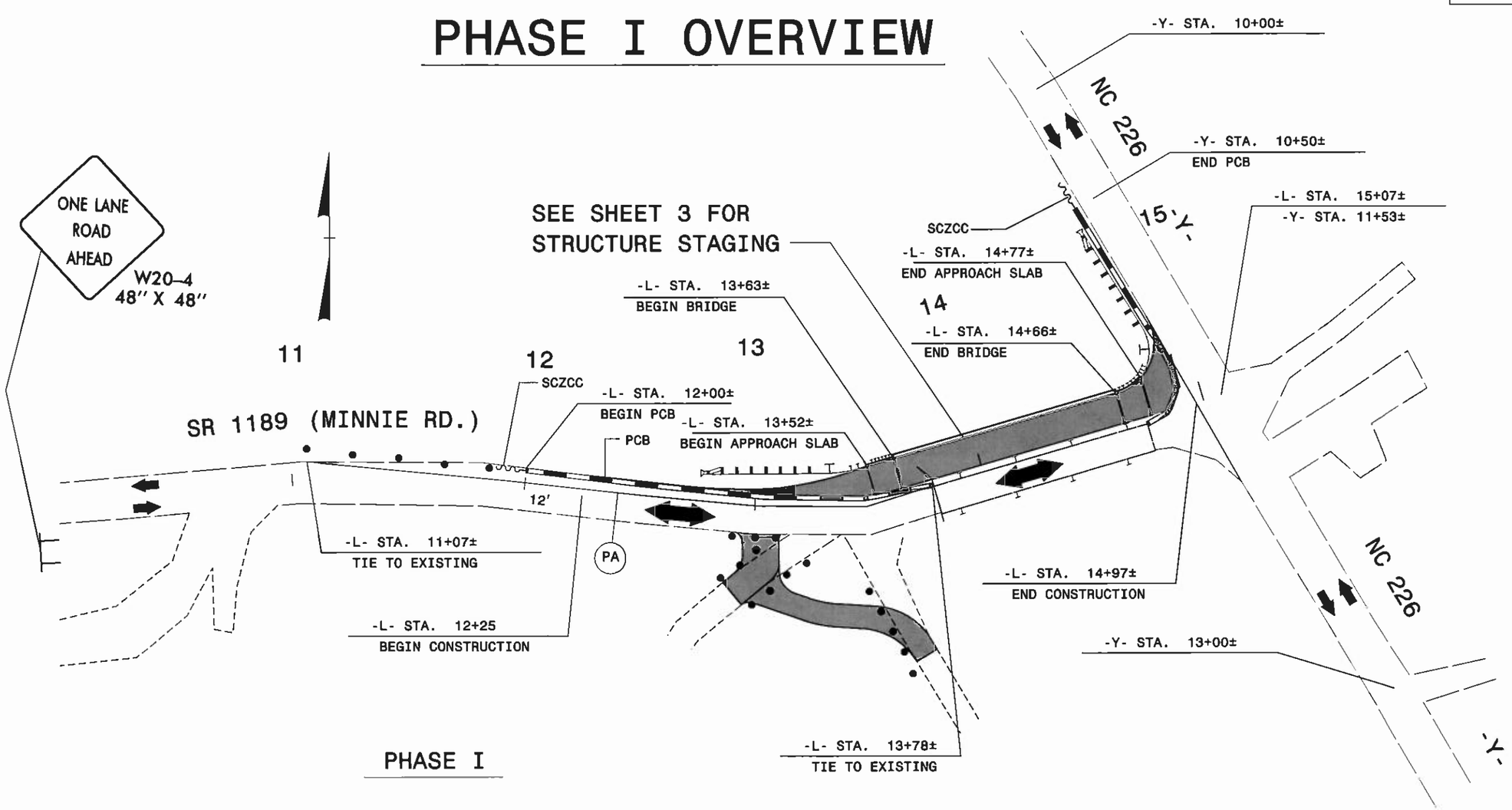

PHASE I

STEP 1: - INSTALL ADVANCE WARNING WORK ZONE SIGNS (SEE SHEET 28)

STEP 2: - USING FLAGGER(S), FLAGGER AHEAD SIGNS AND DRUMS, CONSTRUCT PROPOSED DRIVEWAY RIGHT OF -L-. AS SHOWN.

STEP 3: - USING ROADWAY STANDARD DRAWING NO. 1101.02, SHEET 1 OF 9, FLAGGER(S), FLAGGER AHEAD SIGNS, PLACE PORTABLE CONCRETE BARRIER (PCB) ALONG THE LEFT EDGE OF EXISTING PAVEMENT FROM -L- STA. 12+00± TO BEGINNING OF EXISTING BRIDGE AND FROM END OF EXISTING BRIDGE TO -Y- STA. 10+50± AS SHOWN.

STEP 4: - BEHIND PCB, CONSTRUCT STAGE I OF PROPOSED STRUCTURE AND APPROACHES UPTO EXISTING EDGE OF PAVEMENT ELEVATION.

PROJECT NO. 42576
COUNTY: MITCHELL
STATION: 14+14.67
REPLACES BRIDGE NO. 177

STATE OF NORTH CAROLINA
DEPARTMENT OF TRANSPORTATION
RALEIGH

BRIDGE NO. 177 ON SR 1189
OVER CANE CREEK

Florence & Hutcheson
CONSULTING ENGINEERS
5121 Kingdom Way, Suite 100 Raleigh, NC 27607

REVISIONS						SHEET NO.
NO.	BY	DATE	NO.	BY	DATE	25
1			3			TOTAL SHEETS
2			4			31

PROJECT REFERENCE NO.	SHEET NO.
BK-5125	
R/W SHEET NO.	

NORTH CAROLINA PROFESSIONAL SEAL 15876 ENGINEER MICHAEL T. REEPE
10-4-10

PHASE II OVERVIEW

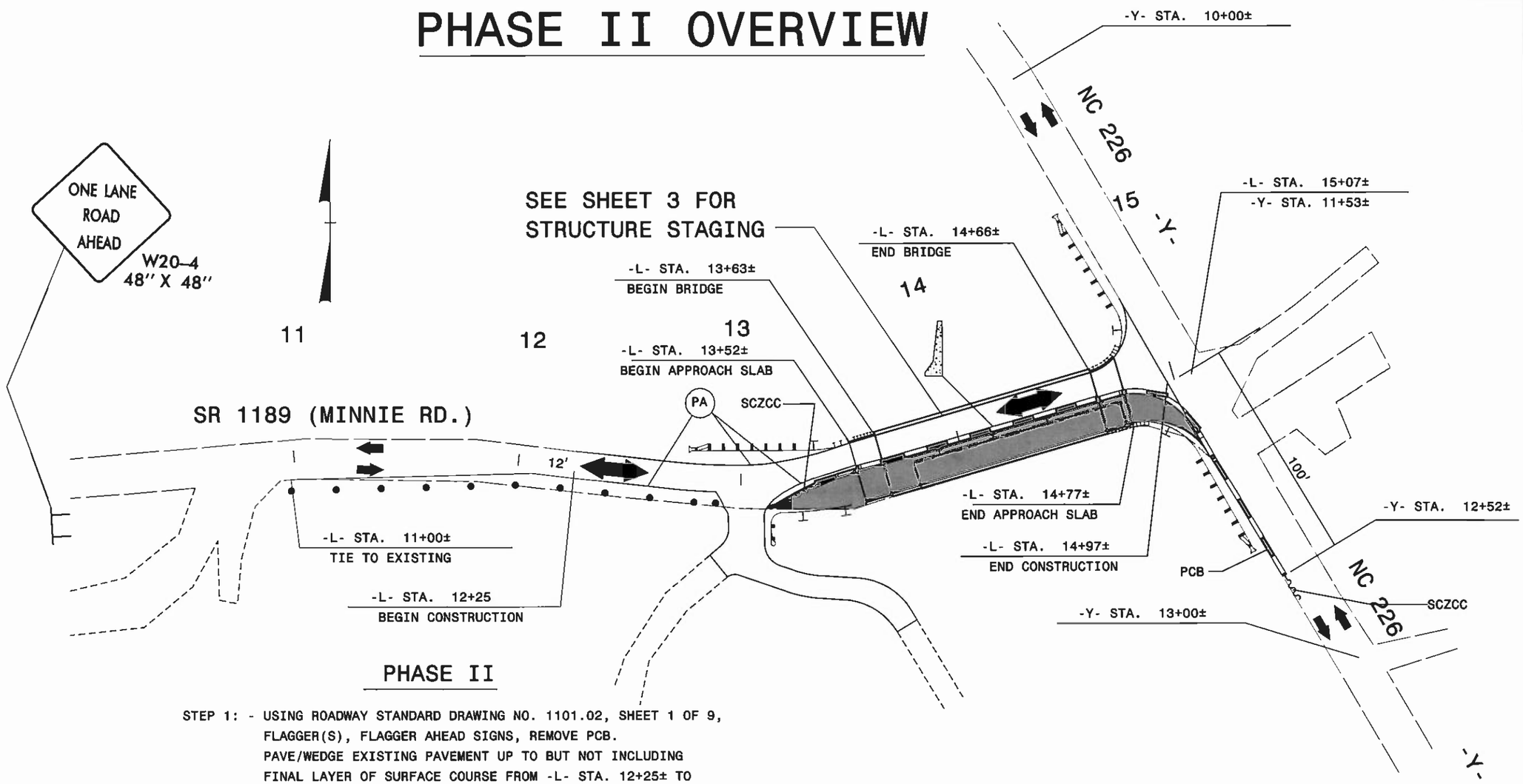

PHASE II

STEP 1: - USING ROADWAY STANDARD DRAWING NO. 1101.02, SHEET 1 OF 9, FLAGGER(S), FLAGGER AHEAD SIGNS, REMOVE PCB. PAVE/WEDGE EXISTING PAVEMENT UP TO BUT NOT INCLUDING FINAL LAYER OF SURFACE COURSE FROM -L- STA. 12+25± TO -L- STA. 13+63± AND FROM -L- STA. 14+66± TO -L- STA. 14+97±. SWITCH TRAFFIC ONTO COMPLETED STAGE I STRUCTURE.

STEP 2: - BEHIND PBC, REMOVE EXISTING BRIDGE AND CONSTRUCT REMAINDER OF NEW BRIDGE AND APPROACHES.

STEP 3: - USING ROADWAY STANDARD DRAWING NO. 1101.02, SHEET 1 OF 9, FLAGGER(S), FLAGGER AHEAD SIGNS, REMOVE PCB. PLACE THE FINAL LAYER OF SURFACE COURSE FROM -L- STA. 12+25± TO -L- STA.14+97±. PLACE PAVEMENT MARKINGS (PAINT) AND MARKERS (PERMANT RAISED) IN THE FINAL PATTERN FROM 12+25± TO -L- STA. 14+97±. (SEE SHEET 27) REMOVE ALL TRAFFIC CONTROL DEVICES AND OPEN ALL LANES UP TO TRAFFIC.

PROJECT NO. 42576
COUNTY: MITCHELL
STATION: 14+14.67
REPLACES BRIDGE NO. 177

STATE OF NORTH CAROLINA
DEPARTMENT OF TRANSPORTATION
RALEIGH

BRIDGE NO. 177 ON SR 1189 OVER CANE CREEK

Florence & Hutcheson
CONSULTING ENGINEERS
5121 Kingdom Way, Suite 100 Raleigh, NC 27607

REVISIONS							
NO.	BY	DATE	NO.	BY	DATE	SHEET NO.	TOTAL SHEETS
1			3			26	31
2			4				

PROJECT REFERENCE NO.	SHEET NO.
BK-5125	
R/W SHEET NO.	

NORTH CAROLINA PROFESSIONAL SEAL 15876 ENGINEER MICHAEL T. REEMA

10-4-10

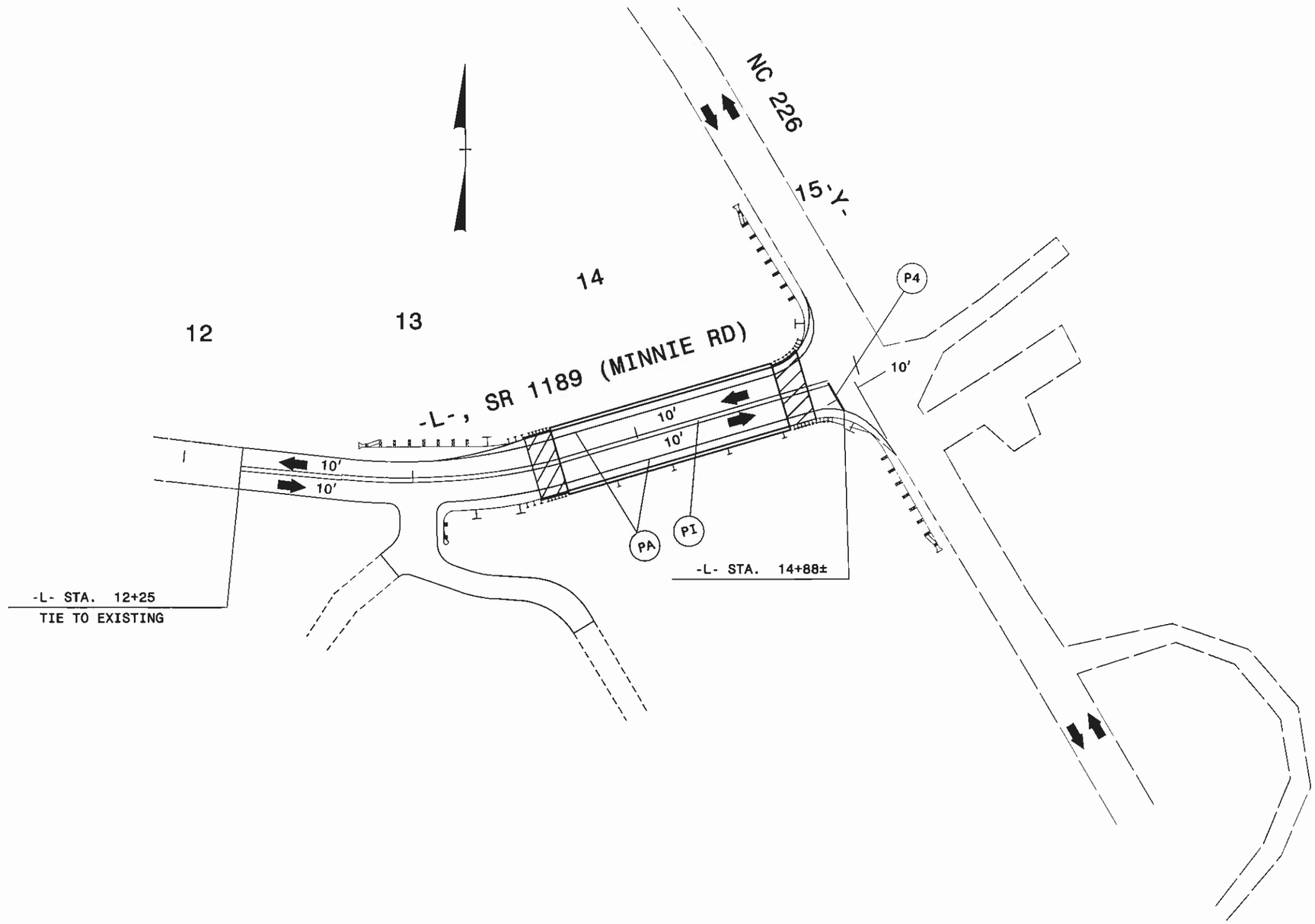

PROJECT NO. 42576
COUNTY: MITCHELL
STATION: 14+14.67
REPLACES BRIDGE NO. 177

STATE OF NORTH CAROLINA
DEPARTMENT OF TRANSPORTATION
RALEIGH

BRIDGE NO. 177 ON SR 1189
OVER CANE CREEK

Florence & Hutcheson
CONSULTING ENGINEERS
5121 Kingdom Way, Suite 100 Raleigh, NC 27607

REVISIONS						SHEET NO.
NO.	BY	DATE	NO.	BY	DATE	27
1			3			TOTAL SHEETS
2			4			31

PROJECT REFERENCE NO.	SHEET NO.
BK-5125	
R/W SHEET NO.	

TWO-WAY UNDIVIDED ** (L-LINES)

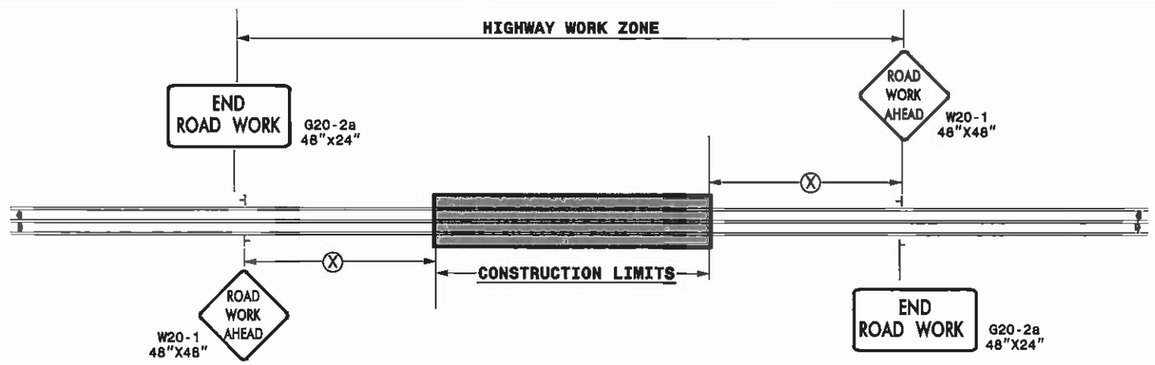

POSTED SPEED LIMIT (M.P.H.)	RECOMMENDED MINIMUM SIGN SPACING (X)
≤ 50	500'
≥ 55	1000'

ROADWAYS INTERSECTING ALONG 2 WAY UNDIVIDED WORK ZONE (Y-LINES)

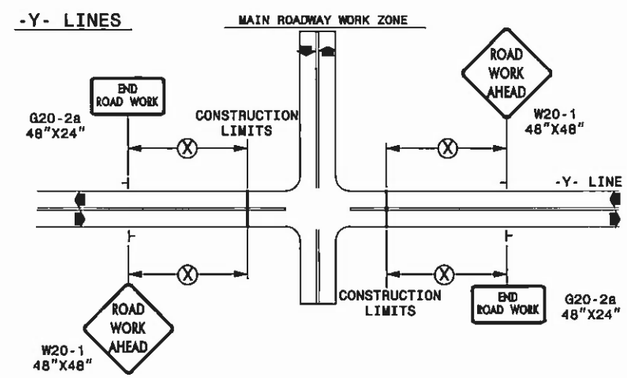

GENERAL NOTES

- USE FLUORESCENT ORANGE SHEETING (TYPE VII OR HIGHER) ON ALL ADVANCE WORK ZONE SIGNS.
- DO NOT INSTALL ADVANCE WARNING SIGNS MORE THAN 3 DAYS PRIOR TO BEGINNING OF WORK.
- SIGNS SHOWN ARE REQUIRED FOR WORK ZONES THAT WILL REMAIN IN EFFECT OVERNIGHT. FOR SHORT-TERM DAILY MAINTENANCE TYPE OPERATIONS, THIS SIGNING APPLICATION IS OPTIONAL; MAY USE ONLY APPLICABLE ROADWAY STANDARD DRAWINGS INSTEAD. HOWEVER, IF THIS SIGNING APPLICATION IS USED, SIGNS MAY BE PORTABLE MOUNTED.
- ALL SIGN SPACING DIMENSIONS ARE APPROXIMATE, FIELD ADJUST AS NECESSARY OR AS DIRECTED.
- USE 3LB STEEL U-CHANNEL POST OR 4" X 4" WOOD POST FOR ALL WORK ZONE SIGNS. 3LB STEEL U-CHANNEL POSTS MUST MEET THE REQUIREMENTS OF STANDARD SPECIFICATION SECTION 1094-1(B), MAY BE GALVANIZED STEEL, OR MAY BE PAINTED GREEN BY THE POST MANUFACTURER. SQUARE STEEL TUBING POSTS HAVING EQUIVALENT STRENGTH OF THE 3 LB STEEL U-CHANNEL POST ARE ALSO ACCEPTABLE FOR USE. ERECT SIGNS PER ROADWAY STANDARD DRAWING 1110.01. PAYMENT FOR WOOD POSTS, 3LB STEEL U-CHANNEL AND SQUARE STEEL TUBING POSTS WITH SIGNS WILL BE MADE ACCORDING TO STANDARD SPECIFICATION "WORK ZONE SIGNS" SECTION 1110.
- WHEN NECESSARY, USE SPLICING IN ACCORDANCE WITH ROADWAY STANDARD DRAWING NO. 1110.01. REMOVE ENTIRE POST WHEN REMOVING SIGNS WITH SPLICED POSTS.
- DO NOT BACK BRACE SIGN SUPPORTS.
- ** TWO-WAY UNDIVIDED ADVANCE WARNING SIGN CONFIGURATION MAY BE USED ON URBAN MULTI-LANE FACILITIES WHERE CONDITIONS LIMIT THE USE OF DUAL MOUNTED SIGNS AS DETERMINED BY THE ENGINEER.

NORTH CAROLINA PROFESSIONAL SEAL 15876 ENGINEER MICHAEL MEHTA

STATE OF NORTH CAROLINA
DEPT. OF TRANSPORTATION
DIVISION OF HIGHWAYS
RALEIGH, N.C.

DETAIL DRAWING FOR TWO-WAY UNDIVIDED WORK ZONE WARNING SIGNS

PROJECT NO. 42576
COUNTY: MITCHELL
STATION: 14+14.67
REPLACES BRIDGE NO. 177

STATE OF NORTH CAROLINA
DEPARTMENT OF TRANSPORTATION
RALEIGH

BRIDGE NO. 177 ON SR 1189
OVER CANE CREEK

LEGEND

⊢ STATIONARY SIGN

DIRECTION OF TRAFFIC FLOW

Florence & Hutcheson
CONSULTING ENGINEERS
5121 Kingdom Way, Suite 100 Raleigh, NC 27607

REVISIONS						
NO.	BY	DATE	NO.	BY	DATE	
1			3			
2			4			

SHEET NO. 28
TOTAL SHEETS 31

PROJ. REFERENCE NO.	SHEET NO.
BK-5125	29

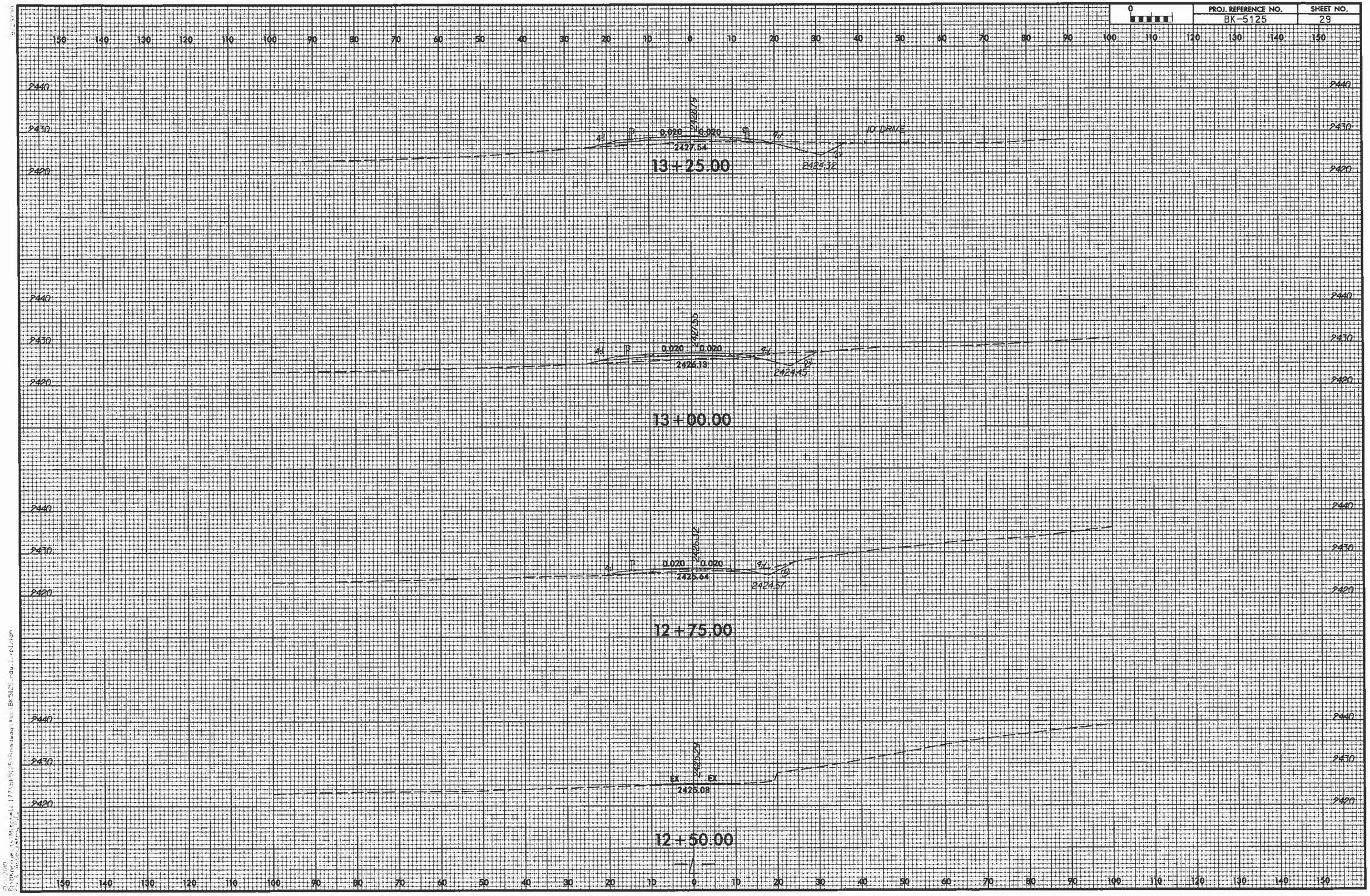

PROJ. REFERENCE NO.	SHEET NO.
BK-5125	30

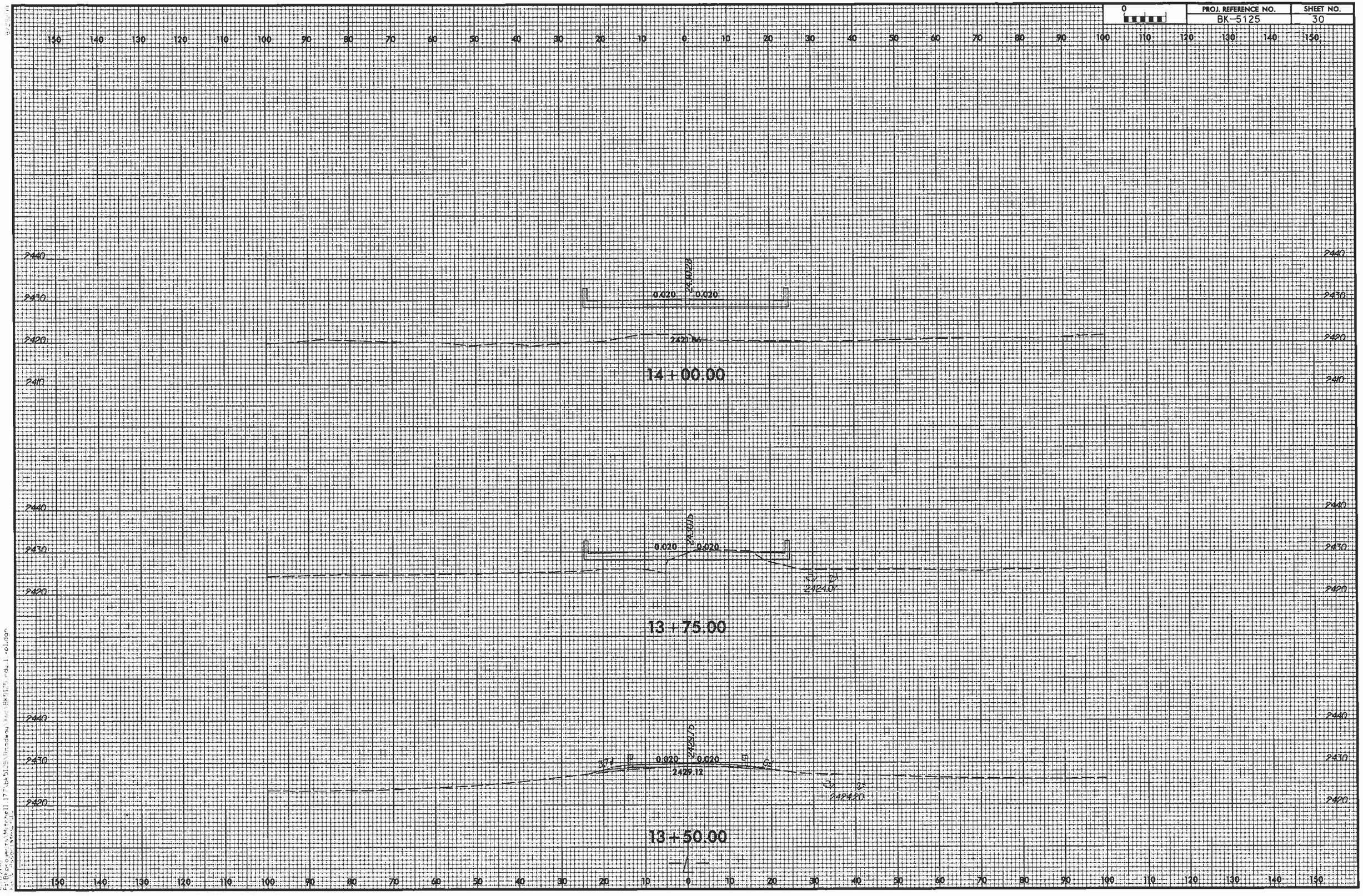

PROJ. REFERENCE NO.	SHEET NO.
BK-5125	31

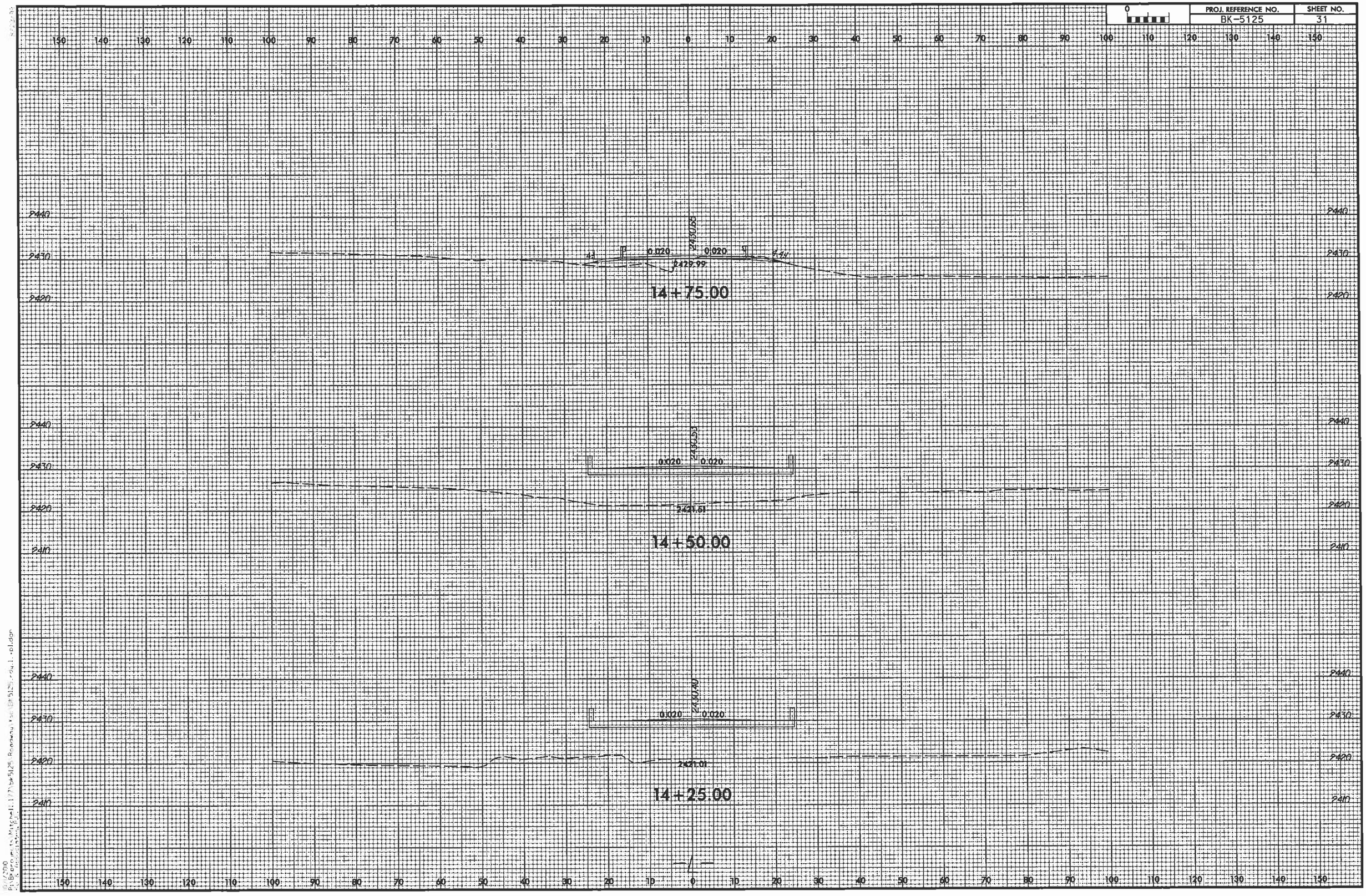

TIP PROJECT: BK-5125

STATE	STATE PROJECT REFERENCE NO.	SHEET NO.	TOTAL SHEETS
N.C.	BK-5125	EC-1	

STATE PROJ. NO.	F.A. PROJ. NO.	DESCRIPTION

STATE OF NORTH CAROLINA
DIVISION OF HIGHWAYS

PLAN FOR PROPOSED
HIGHWAY EROSION CONTROL

MITCHELL COUNTY

BRIDGE NO. 177 ON SR 1189 OVER CANE CREEK

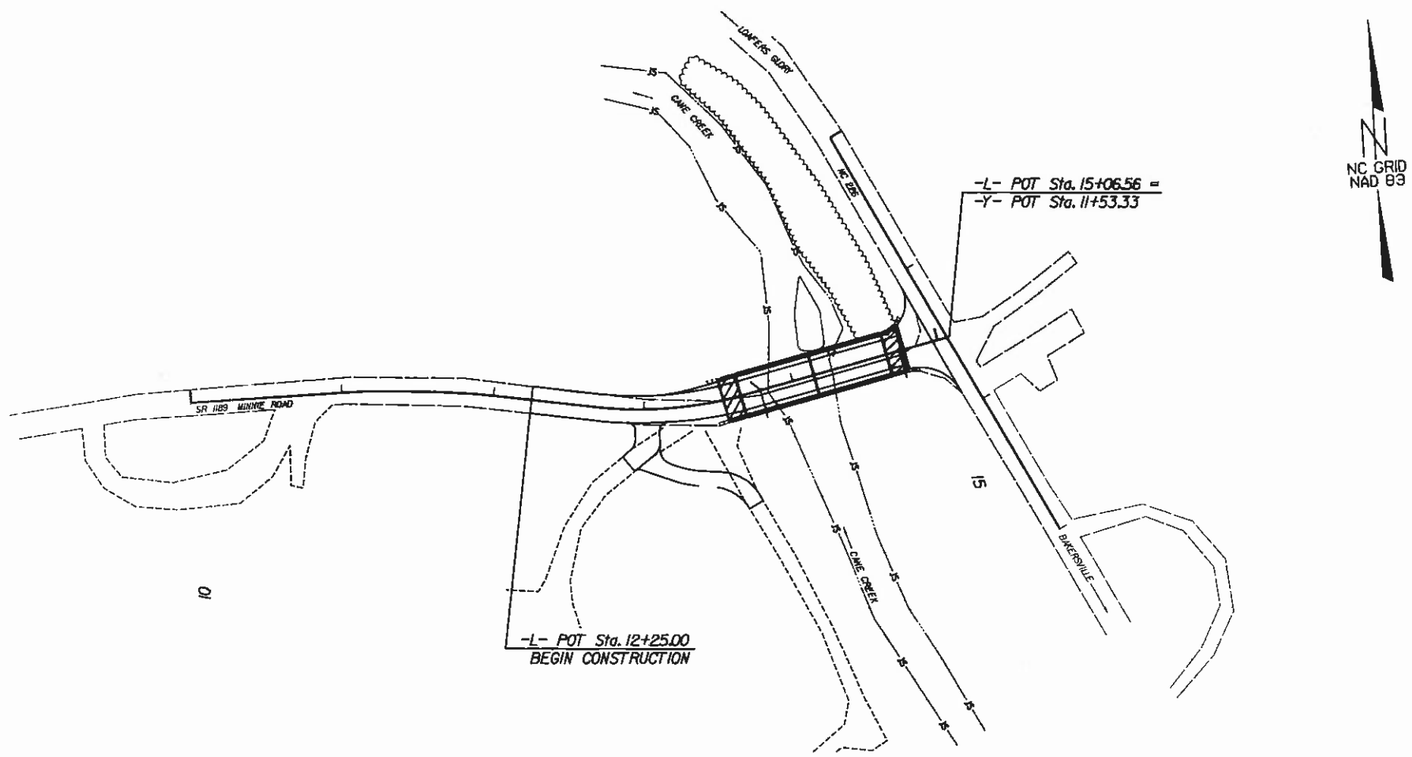

EROSION AND SEDIMENT CONTROL MEASURES

Std. #	Description	Symbol
1630.03	Temporary Silt Ditch	
1630.05	Temporary Diversion	TD
1605.01	Temporary Silt Fence	
1606.01	Special Sediment Control Fence	
1622.01	Temporary Berms and Slope Drains	
	Silt Basin Type B	
1633.01	Temporary Rock Silt Check Type-A	
	Temporary Rock Silt Check Type-A with Matting and Polyacrylamide (PAM)	
	Temporary Rock Silt Check Type-B	
	Wattle	
1634.01	Temporary Rock Sediment Dam Type-A	
1634.02	Temporary Rock Sediment Dam Type-B	
1635.01	Rock Pipe Inlet Sediment Trap Type-A	
1635.02	Rock Pipe Inlet Sediment Trap Type-B	
1630.04	Stilling Basin	
1630.06	Special Stilling Basin	
	Rock Inlet Sediment Trap:	
1632.01	Type A	A
1632.02	Type B	B
1632.03	Type C	C
	Skimmer Basin	
	Tiered Skimmer Basin	
	Infiltration Basin	

ENVIRONMENTALLY SENSITIVE AREA(S) EXIST ON THIS PROJECT

Refer To E. C. Special Provisions for Special Considerations.

THIS PROJECT CONTAINS EROSION CONTROL PLANS FOR CLEARING AND GRUBBING PHASE OF CONSTRUCTION.

THIS PROJECT HAS BEEN DESIGNED TO SENSITIVE WATERSHED STANDARDS.

Florence & Hutcheson
CONSULTING ENGINEERS
5121 Kingdom Way, Suite 100 Raleigh, NC 27607
NC License No: F-0258

GRAPHIC SCALE

25 0 50
PLANS

25 0 50
PROFILE (HORIZONTAL)

5 0 10
PROFILE (VERTICAL)

ROADSIDE ENVIRONMENTAL PROJECT ENGINEER

NORTH CAROLINA PROFESSIONAL SEAL 24198 ENGINEER STACEY H. BAILEY
9/1/10

W. HERBERT TURNER, JR, P.E.
ROADSIDE ENVIRONMENTAL ENGINEER
134
LEVEL IIIA CERTIFICATION NUMBER

STACEY H. BAILEY, P.E.
ROADSIDE ENVIRONMENTAL PROJECT ENGINEER
462
LEVEL IIIA CERTIFICATION NUMBER

Prepared in the Office of:

FLORENCE & HUTCHESON
5121 KINGDOM WAY, SUITE 100
RALEIGH NC 27607
NC License No: F-0258

2006 STANDARD SPECIFICATIONS

Roadway Standard Drawings

The following roadway english standards as appear in "Roadway Standard Drawings"– Roadway Design Unit – N. C. Department of Transportation – Raleigh, N. C., dated July 18, 2006 and the latest revision thereto are applicable to this project and by reference hereby are considered a part of these plans.

1605.01 Temporary Silt Fence
1607.01 Gravel Construction Entrance
1622.01 Temporary Berms and Slope Drains
1630.05 Temporary Diversion
1630.06 Special Stilling Basin
1632.03 Rock Inlet Sediment Trap Type C
1633.01 Temporary Rock Silt Check Type A

9/1/2010
florence & hutcheson, inc.

PROJECT REFERENCE NO.	SHEET NO.
BK-5125	EC-1A
R/W SHEET NO.	
ROADSIDE ENVIRONMENTAL PROJECT ENGINEER	

NORTH CAROLINA PROFESSIONAL SEAL (4451) ENGINEER STACEY H. BAILEY 9/1/10

MATTING INSTALLATION DETAIL

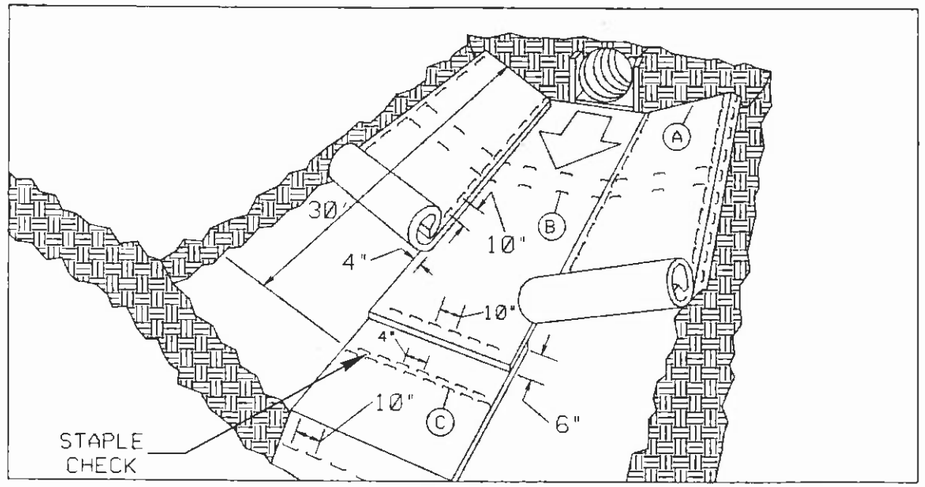

MATTING IN DITCHES

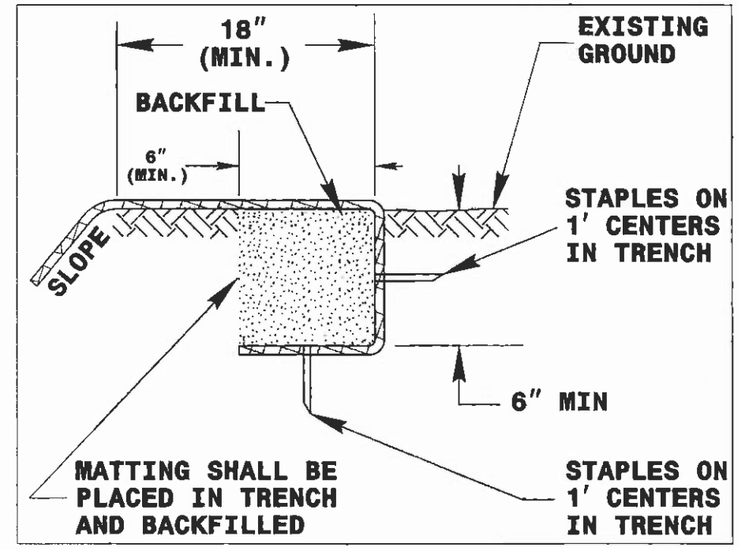

DIAGRAM A

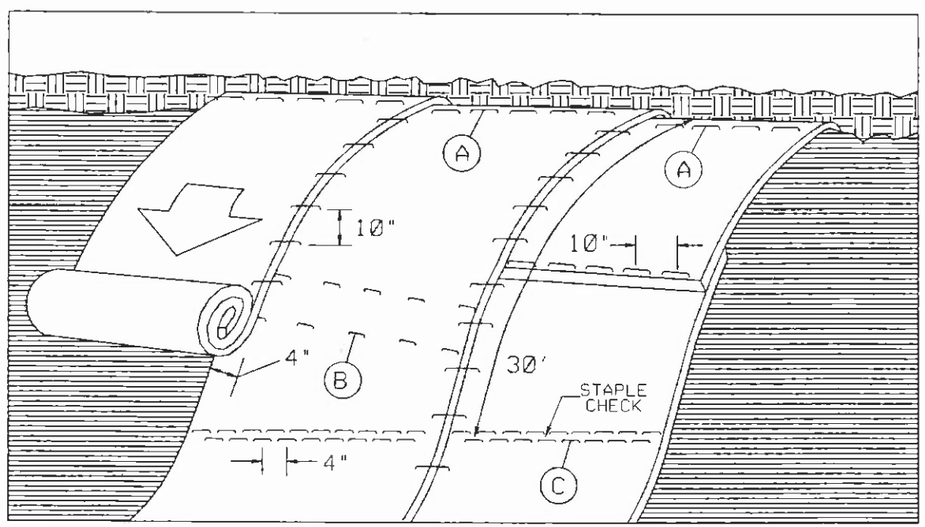

MATTING ON SLOPES

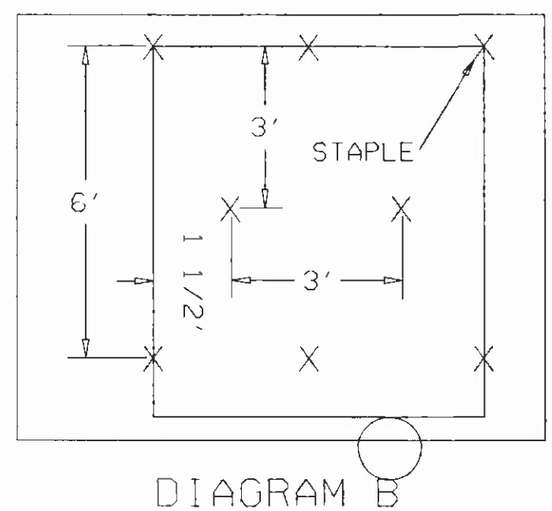

DIAGRAM B

STAPLE CHECK PATTERN

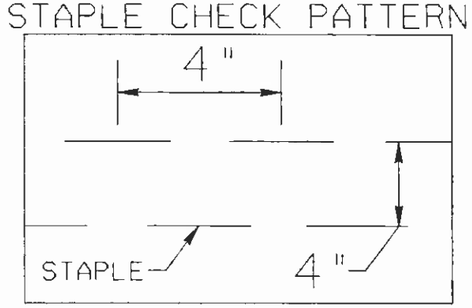

DIAGRAM C

NOTES:

THIS DETAIL APPLIES TO STRAW, EXCELSIOR, AND PERMANENT SOIL REINFORCEMENT MAT (PSRM) INSTALLATION.

STAPLES SHALL BE NO. 11 GAUGE STEEL WIRE FORMED INTO A "U" SHAPE WITH A MINIMUM THROAT WIDTH OF 1 INCH AND NOT LESS THAN 6 INCHES IN LENGTH.

NOT TO SCALE

NOTE:
PLACE TEMPORARY ROCK SEDIMENT DAMS TYPE – B AND TEMPORARY ROCK SILT CHECKS TYPE – A AT DRAINAGE OUTLETS.

GRAPHIC SCALE
50 0 50 100

PROJECT REFERENCE NO.	SHEET NO.
BK-5125	EC-2/CONST. 4
R/W SHEET NO.	
ROADSIDE ENVIRONMENTAL PROJECT ENGINEER	

NORTH CAROLINA PROFESSIONAL SEAL 24451 ENGINEER TRACEY H. BAILEY
9/1/10

CLEARING AND GRUBBING
EROSION CONTROL FOR
CONSTRUCTION SHEET 4

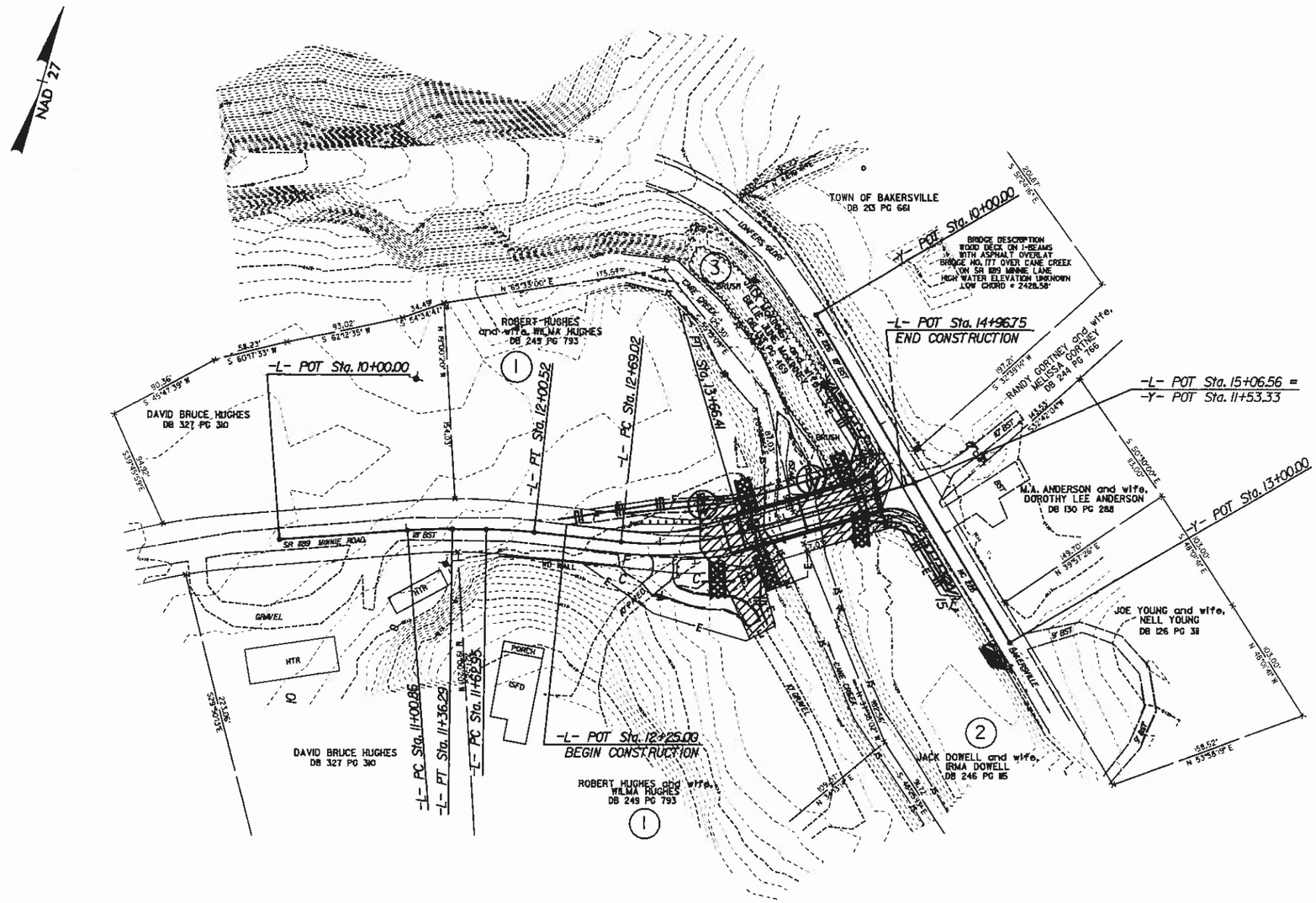

ENVIRONMENTALLY SENSITIVE AREA (TROUT WATERS)
SEE PROJECT SPECIAL PROVISIONS

Florence & Hutcheson
CONSULTING ENGINEERS
5121 Kingdom Way, Suite 100 Raleigh, NC 27607
NC License No. F-0256

PROJECT NO. 42576
COUNTY: MITCHELL
STATION: 14+14.67
REPLACES BRIDGE NO. 177

STATE OF NORTH CAROLINA
DEPARTMENT OF TRANSPORTATION
RALEIGH

BRIDGE NO. 177 ON SR 1189
OVER CANE CREEK

REVISIONS						SHEET NO.
NO.	BY	DATE	NO.	BY	DATE	TOTAL SHEETS
1			3			
2			4			

REVISIONS

9/1/2010
S:\Hydraulics\erosion control\BK5125_hydr_eros_c&g.dgn

GRAPHIC SCALE
50 0 50 100

PROJECT REFERENCE NO.	SHEET NO.
BK-5125	EC-3/CONST.4
R/W SHEET NO.	
ROADSIDE ENVIRONMENTAL PROJECT ENGINEER	

NORTH CAROLINA PROFESSIONAL SEAL 22451 ENGINEER TRACEY H. BAILEY
9/1/10

FINAL GRADE EROSION CONTROL FOR CONSTRUCTION SHEET 4

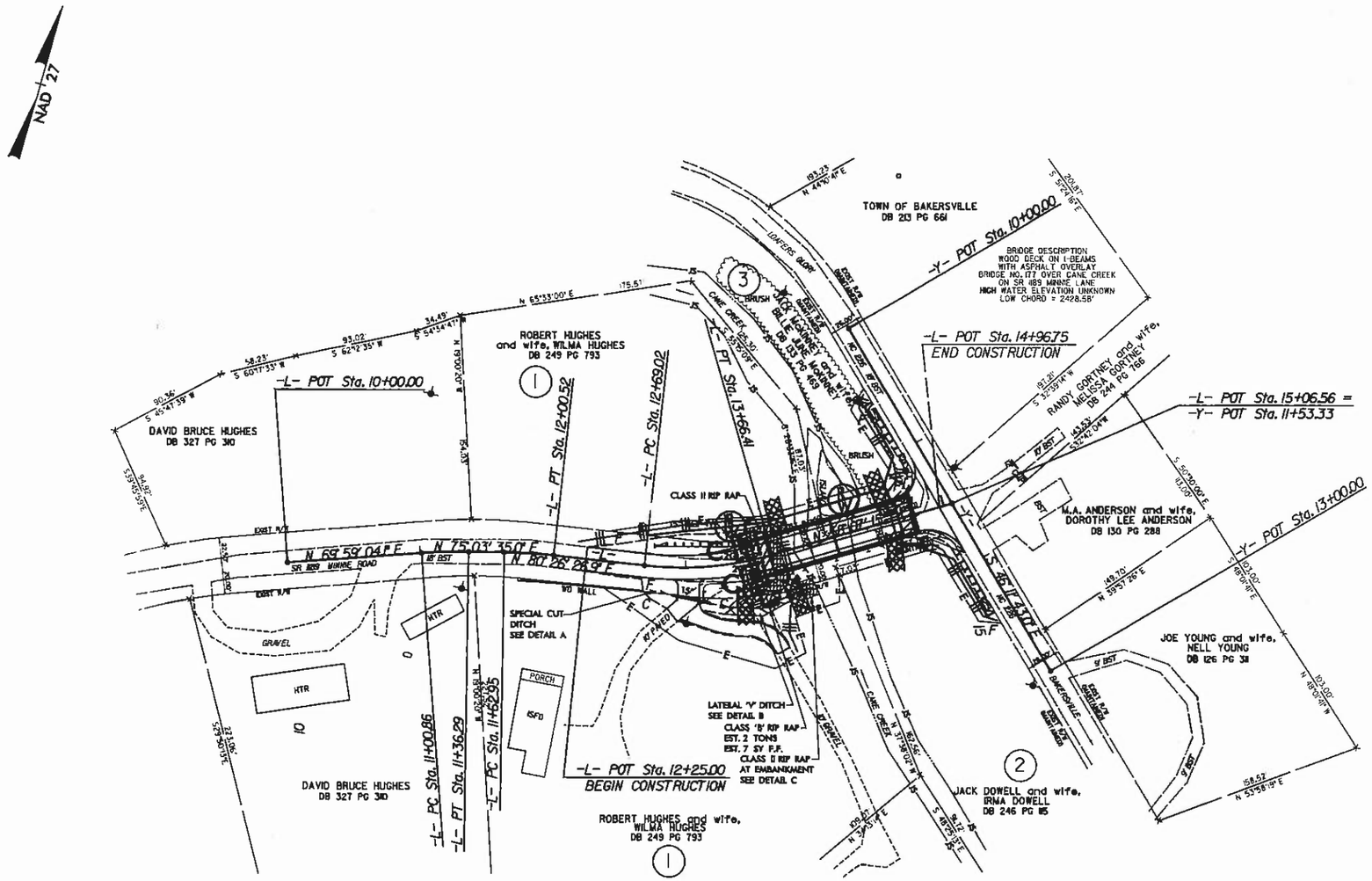

PROJECT NO. 42576
COUNTY: MITCHELL
STATION: 14+14.67
REPLACES BRIDGE NO. 177

STATE OF NORTH CAROLINA
DEPARTMENT OF TRANSPORTATION
RALEIGH

BRIDGE NO. 177 ON SR 1189
OVER CANE CREEK

Florence & Hutcheson
CONSULTING ENGINEERS
5136 Kingdom Way, Suite 100 Raleigh, NC 27607
NC License No. F-0266

REVISIONS						SHEET NO.
NO.	BY	DATE	NO.	BY	DATE	
1			3			TOTAL SHEETS
2			4			

REVISIONS

9/1/2010
D:\Hydraulics\erosion control\BK5125_hyd_eros_final.dgn
M.K. Rasmussen PE

PROJECT REFERENCE NO.	SHEET NO.
BK-5125	RF-1
R/W SHEET NO.	
ROADSIDE ENVIRONMENTAL PROJECT ENGINEER	

NORTH CAROLINA PROFESSIONAL SEAL 24493 ENGINEER STACEY H. BALLEW
9/1/10

PLANTING DETAILS

SEEDLING / LINER BAREROOT PLANTING DETAIL

HEALING IN

1. Locate a healing-in site in a shady, well protected area.
2. Excavate a flat bottom trench 12 inches deep and provide drainage.

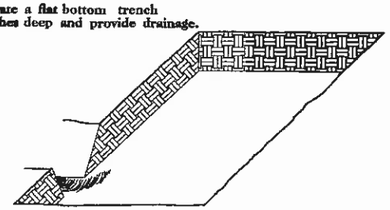

3. Backfill the trench with 2 inches well rotted sawdust. Place a 2 inch layer of well rotted sawdust at a sloping angle at one end of the trench.

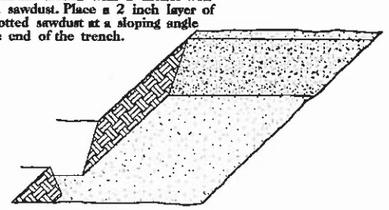

4. Place a single layer of plants against the sloping end so that the root collar is at ground level.

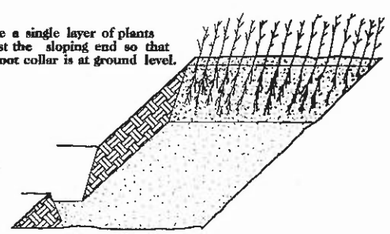

5. Place a 2 inch layer of well rotted sawdust over the roots maintaining a sloping angle.

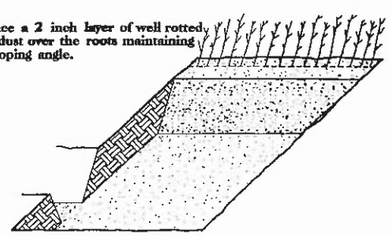

6. Repeat layers of plants and sawdust as necessary and water thoroughly.

DIBBLE PLANTING METHOD
USING THE KBC PLANTING BAR

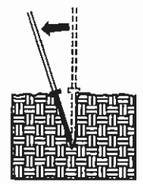

1. Insert planting bar as shown and pull handle toward planter.

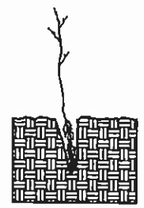

2. Remove planting bar and place seedling at correct depth.

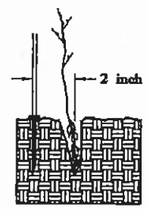

3. Insert planting bar 2 inches toward planter from seedling.

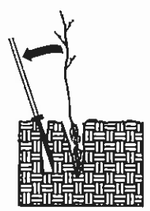

4. Pull handle of bar toward planter, firming soil at bottom.

5. Push handle forward firming soil at top.

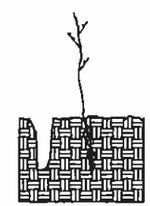

6. Leave compaction hole open. Water thoroughly.

PLANTING NOTES:

PLANTING BAG
During planting, seedlings shall be kept in a moist canvas bag or similar container to prevent the root systems from drying.

KBC PLANTING BAR
Planting bar shall have a blade with a triangular cross section, and shall be 12 inches long, 4 inches wide and 1 inch thick at center.

ROOT PRUNING
All seedlings shall be root pruned, if necessary, so that no roots extend more than 10 inches below the root collar.

REFORESTATION

☐ TREE REFORESTATION SHALL BE PLANTED 6 FT. TO 10 FT. ON CENTER, RANDOM SPACING, AVERAGING 8 FT. ON CENTER, APPROXIMATELY 680 PLANTS PER ACRE.

REFORESTATION

MIXTURE, TYPE, SIZE, AND FURNISH SHALL CONFORM TO THE FOLLOWING:

25% LIRIODENDRON TULIPIFERA	TULIP POPLAR	12 in - 18 in BR
25% PLATANUS OCCIDENTALIS	SYCAMORE	12 in - 18 in BR
25% FRAXINUS PENNSYLVANICA	GREEN ASH	12 in - 18 in BR
25% BETULA NIGRA	RIVER BIRCH	12 in - 18 in BR

REFORESTATION DETAIL SHEET

N.C.D.O.T. - ROADSIDE ENVIRONMENTAL UNIT