TIP PROJ. NO. BK-5121

350 IREDELL COUNTY

B.M. #1 - R.R. SPIKE IN POWER POLE 24.0' LEFT OF STA. 16+03.00 -L-, ELEV. = 808.38.

B.M. #2 - R.R. SPIKE IN POWER POLE 27.0' RIGHT OF STA. 17+34.00 -L-, ELEV. = 811.75.

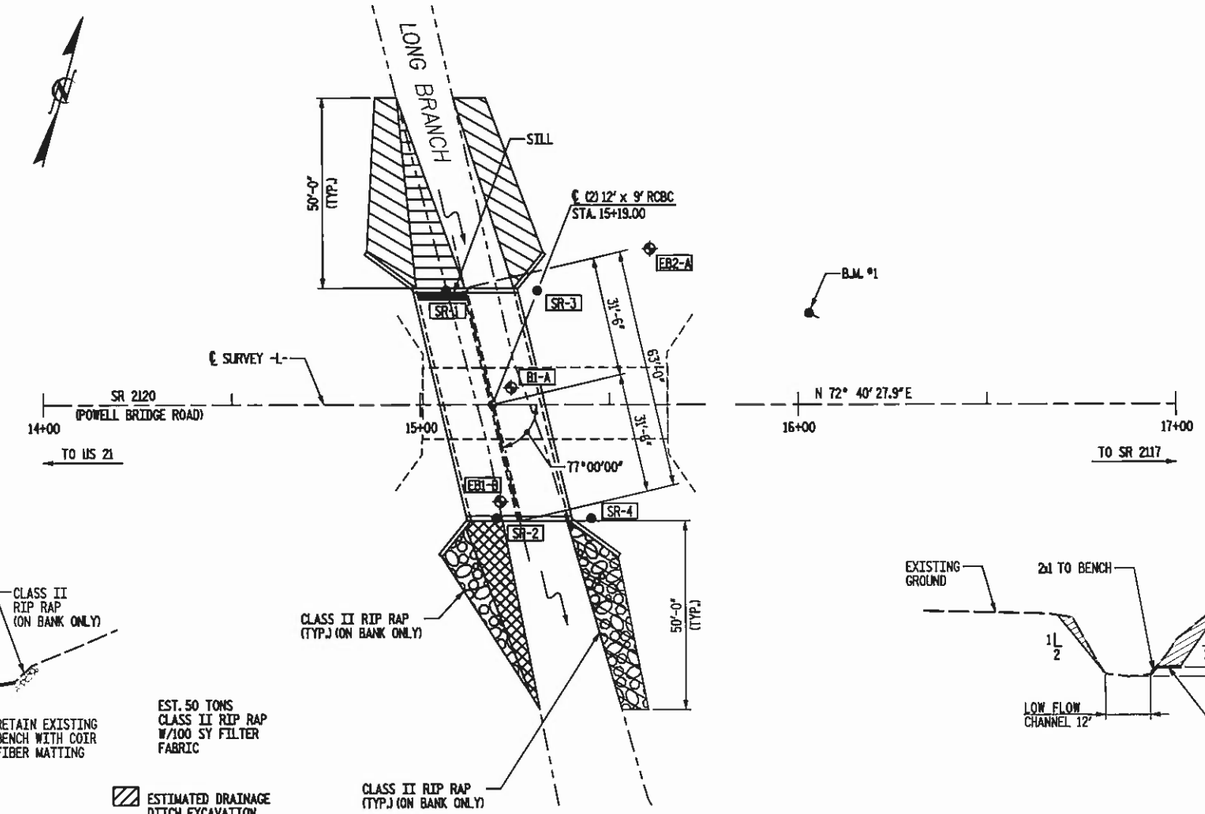

PLAN

SCALE: 1" = 20'-0"

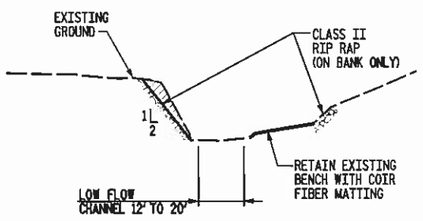

EST. 50 TONS CLASS II RIP RAP W/100 SY FILTER FABRIC

ESTIMATED DRAINAGE DITCH EXCAVATION = 50 CY

OUTLET CHANNEL SECTION

(LOOKING DOWNSTREAM)

SCALE: VERT. = 1" = 10'
HORIZ. = 1" = 30'±

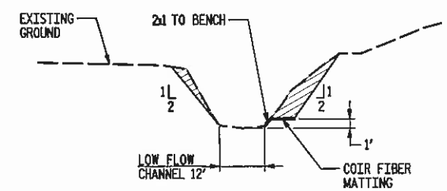

ESTIMATED DRAINAGE DITCH EXCAVATION = 150 CY

INLET CHANNEL SECTION

(LOOKING DOWNSTREAM)

SCALE: VERT. = 1" = 10'
HORIZ. = 1" = 30'±

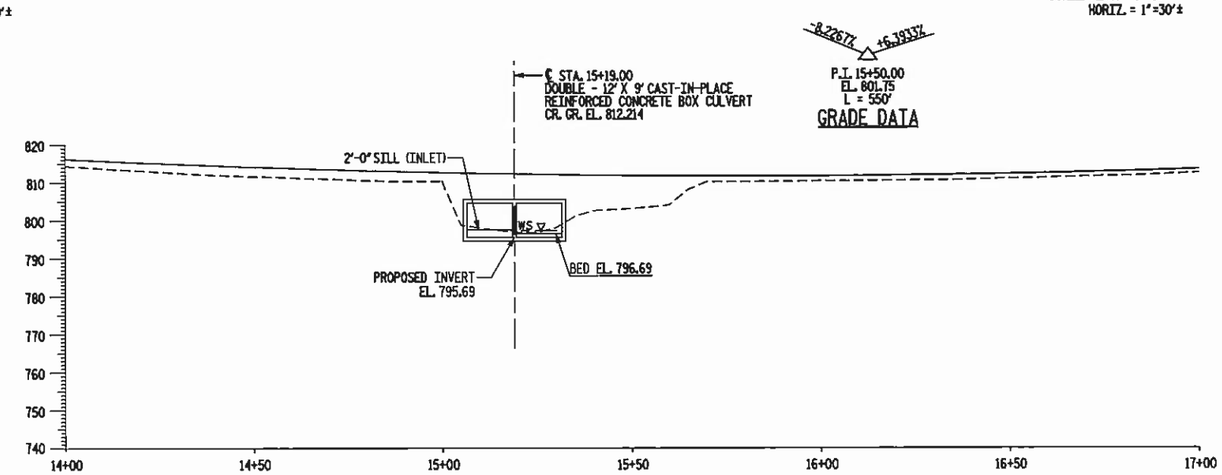

PROFILE ALONG ℄ SURVEY

SCALE: 1" = 20'

NOTES

1. ASSUMED LIVE LOAD ---------- HS25 OR ALTERNATE LOADING.
2. DESIGN FILL ---------- 7.7'.
3. FOR OTHER DESIGN DATA AND NOTES SEE STANDARD NOTE SHEET.
4. 3" DIAMETER WEEP HOLES INDICATED TO BE IN ACCORDANCE WITH THE SPECIFICATIONS.
5. CONCRETE IN CULVERTS TO BE POURED IN THE FOLLOWING ORDER:
   1. WING FOOTINGS AND FLOOR SLAB INCLUDING 3 1/2" OF VERTICAL WALLS.
   2. THE REMAINING PORTIONS OF THE WALLS AND WINGS FULL HEIGHT FOLLOWED BY ROOF SLAB AND HEADWALLS.
6. THE ENGINEER SHALL CHECK THE LENGTH OF CULVERT BEFORE STAKING IT OUT TO MAKE CERTAIN THAT IT WILL PROPERLY TAKE CARE OF THE FILL.
7. AT THE CONTRACTOR'S OPTION, HE MAY SPLICE THE VERTICAL REINFORCING STEEL IN THE INTERIOR FACE OF EXTERIOR WALL AND BOTH FACES OF INTERIOR WALLS ABOVE LOWER WALL CONSTRUCTION JOINT. THE SPLICE LENGTH SHALL BE AS PROVIDED IN THE SPLICE LENGTH CHART SHOWN ON THE PLANS. EXTRA WEIGHT OF STEEL DUE TO THE SPLICES SHALL BE PAID FOR BY THE CONTRACTOR.
8. AT THE CONTRACTOR'S OPTION HE MAY SUBMIT TO THE ENGINEER FOR APPROVAL DESIGN AND DETAIL DRAWINGS FOR A PRECAST REINFORCED CONCRETE BOX CULVERT IN LIEU OF THE CAST-IN-PLACE CULVERT SHOWN ON THE PLANS. THE DESIGN SHALL PROVIDE THE SAME SIZE AND NUMBER OF BARRELS AS USED ON THE CAST-IN-PLACE DESIGN. FOR OPTIONAL PRECAST REINFORCED CONCRETE BOX CULVERT, SEE SPECIAL PROVISIONS.
9. THE CONTRACTOR SHALL EXCAVATE TO THE DEPTH 1' BELOW THE BOTTOM OF THE BARREL AND WINGWALL FOOTING AND BACKFILL WITH FOUNDATION CONDITIONING MATERIAL AS DIRECTED BY THE ENGINEER. FOUNDATION CONDITIONING MATERIAL SHALL BE PLACED UNDER AND TO ONE(1) FOOT OUTSIDE THE LIMITS OF THE BARREL AND FOOTING.
10. STEEL IN THE BOTTOM SLAB MAY BE SPLICED AT THE PERMITTED CONSTRUCTION JOINT AT THE CONTRACTOR'S OPTION. EXTRA WEIGHT OF STEEL DUE TO THE SPLICES WILL BE PAID FOR BY THE CONTRACTOR.
11. THE EXISTING BRIDGE SHALL BE REMOVED BY SAWING AND/OR NON SHATTERING METHODS SUCH THAT DEBRIS WILL NOT FALL INTO THE WATER.
12. THE QUANTITY OF RIP RAP TO BE PAID FOR WILL BE THE ACTUAL NUMBER OF TONS OF CLASS II RIP RAP WHICH HAS BEEN INCORPORATED INTO THE COMPLETED AND ACCEPTED WORK. THE RIP RAP WILL BE MEASURED BY BEING WEIGHED IN TRUCKS ON CERTIFIED PLATFORM SCALES OR OTHER CERTIFIED WEIGHING DEVICES. THE QUANTITY OF RIP RAP WILL BE PAID FOR AT THE CONTRACT UNIT PRICE PER TON.
13. COST OF BED MATERIAL, FOUNDATION CONDITIONING MATERIAL, AND STRUCTURE EXCAVATION SHALL BE INCLUDED IN THE LUMP SUM BID PRICE FOR EXCAVATION AND EMBANKMENT.

PLAIN RIP RAP CLASS II (1'-6" THICK)		FILTER FABRIC
DOWNSTREAM	50 TONS	100 SQUARE YARDS
PLAIN RIP RAP CLASS B		FILTER FABRIC
TOTAL	4 TONS	14 SQUARE YARDS

ADT = 640 FOR YEAR 2009

◈ GEOTECH BORE HOLES LOCATION

● GROUNDING ROD

HYDRAULIC DATA

DESIGN DISCHARGE	=	1200	CFS
FREQUENCY OF DESIGN FLOOD	=	25	YRS
DESIGN HIGH WATER ELEVATION	=	804.68	FT
DRAINAGE AREA	=	4.27	SQ MILES
BASIC DISCHARGE (Q_{100})	=	1800	CFS
BASIC HIGH WATER ELEVATION	=	806.48	FT

OVERTOPPING FLOOD DATA

OVERTOPPING DISCHARGE	=	3058	CFS
FREQUENCY OF OVERTOPPING FLOOD	=	500+	YRS
OVERTOPPING FLOOD ELEVATION	=	811.64	FT

DESCRIPTION OF EXISTING BRIDGE

1 SPAN @ 35'-3", 1 SPAN @ 30'-3"; 1.5" ASPHALT WEARING SURFACE ON 4" x 8" TIMBER FLOOR ON I-BEAMS; ON TIMBER CAP ON TIMBER POSTS AND CONCRETE SILL AT END BENT 1; ON TIMBER CAP AND TIMBER PILES AT END BENT 2 AND INTERIOR BENT; 19'-0" CLEAR ROADWAY WIDTH SHALL BE REMOVED.

PROJECT NO. 42572
COUNTY: IREDELL
STATION: 15+19.00
REPLACES BRIDGE NO. 350

STATE OF NORTH CAROLINA
DEPARTMENT OF TRANSPORTATION
RALEIGH

CULVERT ON SR 2120
OVER LONG BRANCH

Florence & Hutcheson
CONSULTING ENGINEERS
5131 Kingdom Way, Suite 100 Raleigh, NC 27607
NC License No: F-0258

NORTH CAROLINA PROFESSIONAL SEAL 20532 ENGINEER JAMES E. MONDOLFI
10-1-10

REVISIONS						SHEET NO.
NO.	BY	DATE	NO.	BY	DATE	1
1			3			TOTAL SHEETS
2			4			16

DRAWN BY: D.H. CARTER DATE: NOV 2009
CHECKED BY: J.E. MONDOLFI DATE: NOV 2009

PLOT: 8/12/2010 8:39:50 AM Ko & Associates, P.C. FILE NAME: P:\MCMA\Div12\Iredell_350\MA12064B\Structures\bA512L_pd.dgn

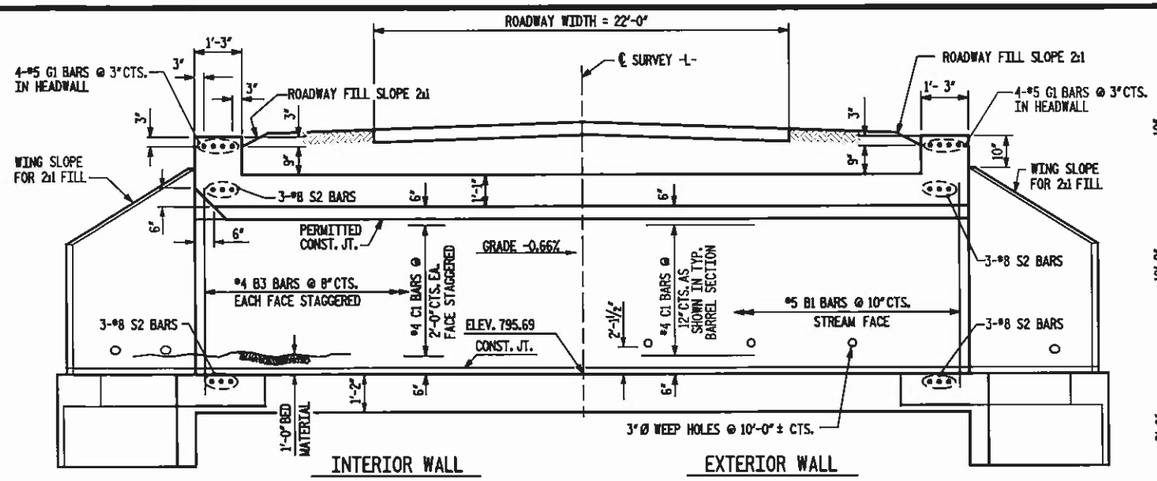

CULVERT SECTION NORMAL TO ROADWAY

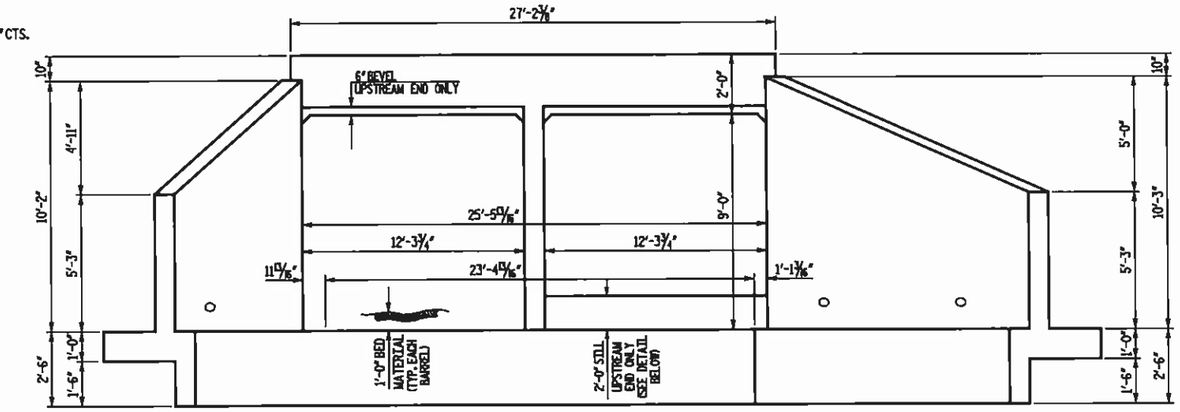

END ELEVATION NORMAL TO SKEW

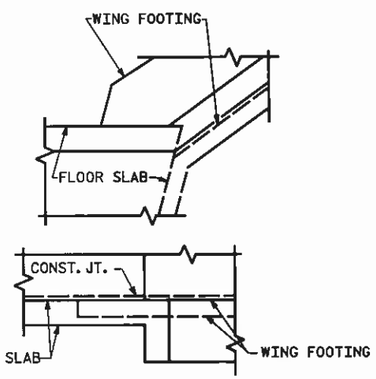

DETAIL

CONNECTION OF WING FOOTING AND FLOOR SLAB WHEN SLAB IS THICKER THAN FOOTING

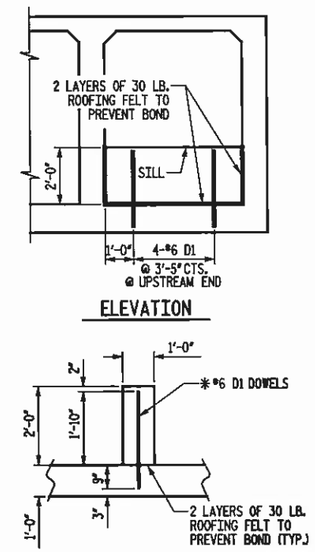

*DOWELS MAY BE PUSHED INTO GREEN CONCRETE AFTER SLAB HAS BEEN FLOAT FINISHED.

SECTION THROUGH SILL

CULVERT SILL DETAILS

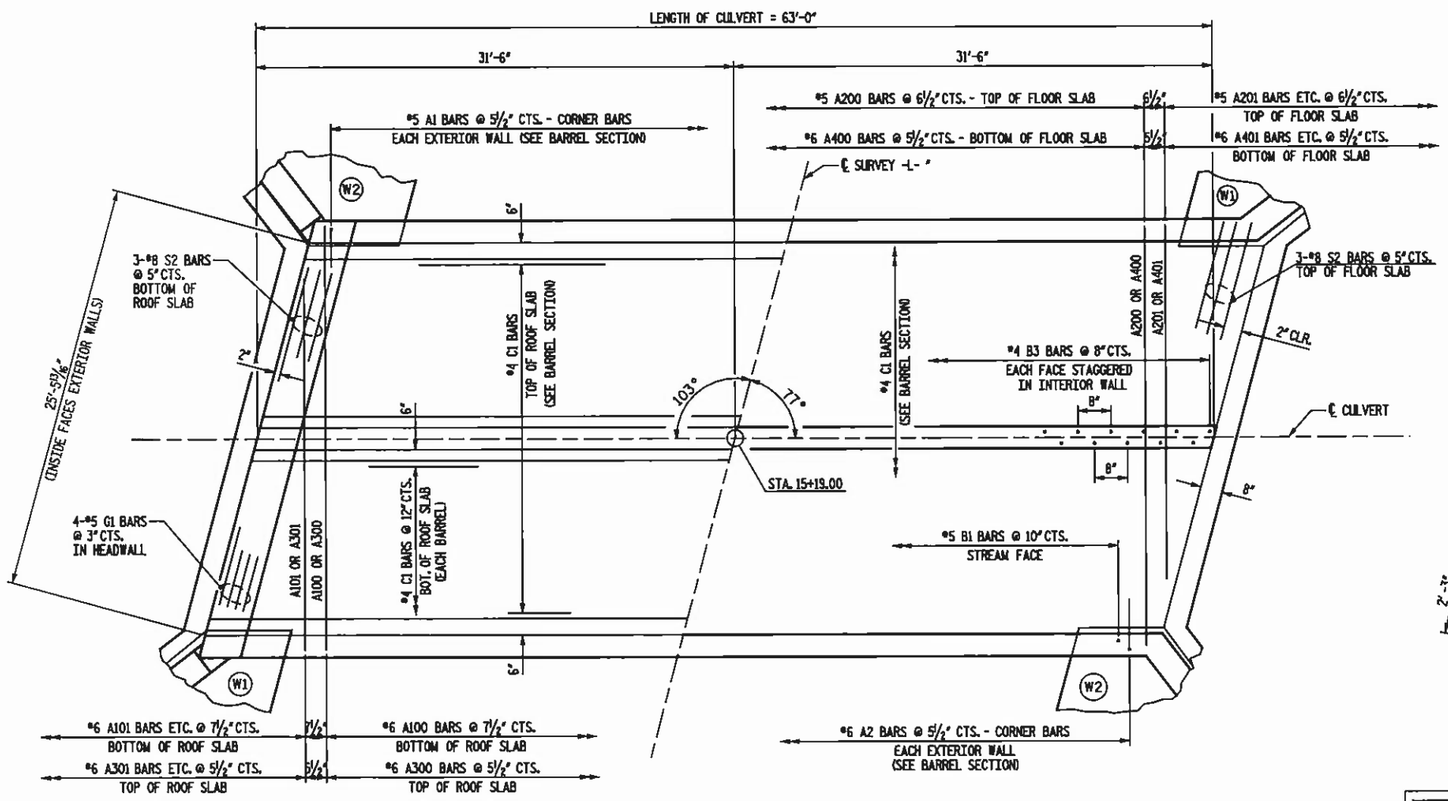

PART PLAN - ROOF SLAB

(CONCRETE ANCHORS FOR GUARDRAIL ANCHORAGE REQUIRED, SEE SHEET NO. 4 FOR DEAILS.)

PART PLAN - FLOOR SLAB

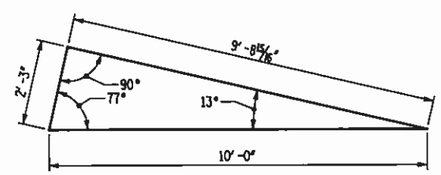

SKEW TRIANGLE

NOT TO SCALE

PROJECT NO. 42572
COUNTY: IREDELL
STATION: 15+19.00
REPLACES BRIDGE NO. 350

STATE OF NORTH CAROLINA
DEPARTMENT OF TRANSPORTATION
RALEIGH

DOUBLE 12 FT. X 9 FT.
CONCRETE BOX CULVERT
77° 00'00" SKEW

Florence & Hutcheson
CONSULTING ENGINEERS
5121 Kingdom Way, Suite 100 Raleigh, NC 27607
NC License No: F-0258

NORTH CAROLINA PROFESSIONAL SEAL 20582 ENGINEER JAMES E. MONDOLFI
10-1-10

REVISIONS						SHEET NO.
NO.	BY	DATE	NO.	BY	DATE	2
1			3			TOTAL SHEETS
2			4			16

DRAWN BY: D.H. CARTER DATE: NOV 2009
CHECKED BY: J.E. MONDOLFI DATE: NOV 2009

PLOT: 8/10/2010 12:26:26 PM Ko & Associates, P.C. FILE NAME: P:\MCMA\DIV12\Iredell_350\MA120646\Structures\bkSUM1_sht2.dgn

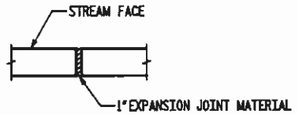

EXPANSION JOINT DETAIL

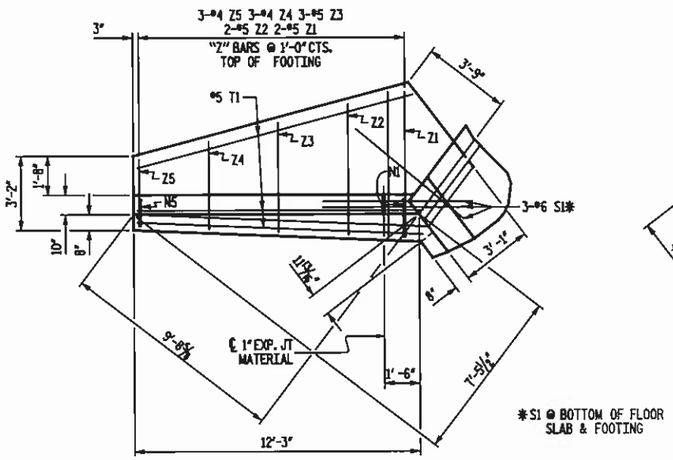

PLAN W2

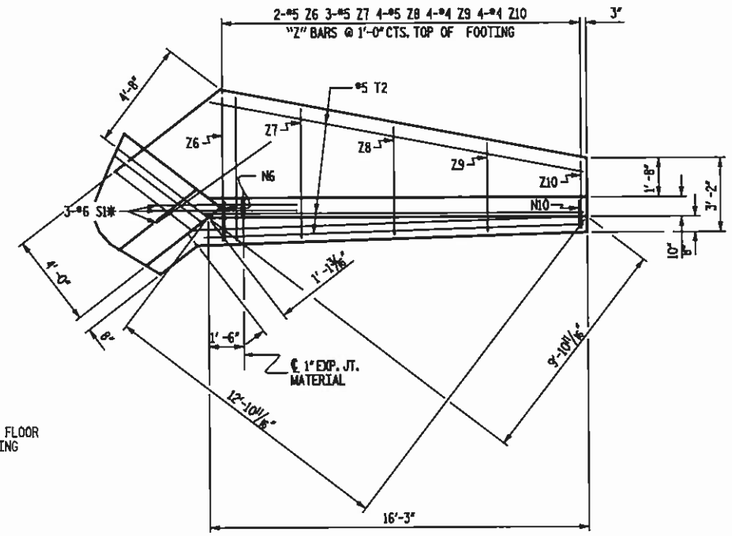

PLAN W1

*S1 @ BOTTOM OF FLOOR SLAB & FOOTING

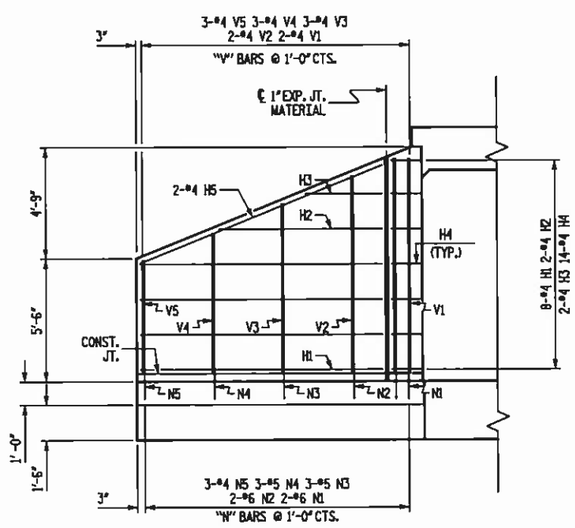

ELEVATION W2

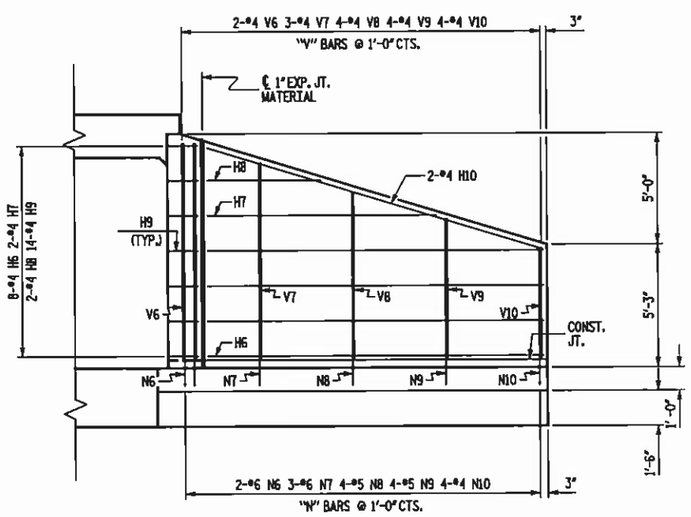

ELEVATION W1

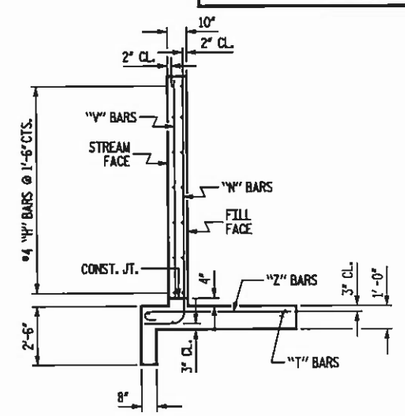

TYPICAL WING SECTION

BAR TYPES

ALL BAR DIMENSIONS ARE OUT TO OUT.

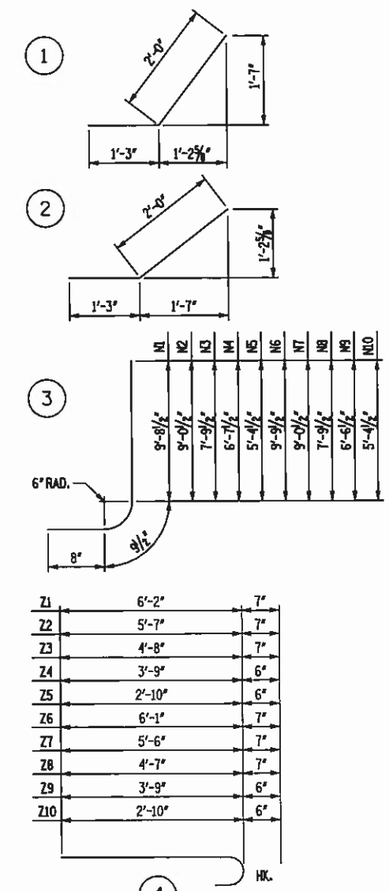

BILL OF MATERIAL

BAR	NO.	SIZE	TYPE	LENGTH	WEIGHT
H1	16	#4	STR	10'-4"	110
H2	4	#4	STR	6'-11"	18
H3	4	#4	STR	3'-3"	9
H4	28	#4	1	3'-3"	61
H5	4	#4	STR	11'-2"	30
H6	16	#4	STR	14'-4"	153
H7	4	#4	STR	9'-10"	26
H8	4	#4	STR	4'-10"	13
H9	28	#4	2	3'-3"	61
H10	4	#4	STR	15'-0"	40
N1	4	#6	3	11'-2"	67
N2	4	#6	3	10'-6"	63
N3	6	#5	3	9'-3"	58
N4	6	#5	3	8'-1"	51
N5	6	#4	3	6'-10"	27
N6	4	#6	3	11'-3"	68
N7	6	#6	3	10'-6"	95
N8	8	#5	3	9'-3"	77
N9	8	#5	3	8'-0"	67
N10	8	#4	3	6'-10"	37
S1	12	#6	STR	6'-0"	108
T1	6	#5	STR	12'-3"	77
T2	6	#5	STR	16'-3"	102
V1	4	#4	STR	9'-2"	24
V2	4	#4	STR	8'-5"	22
V3	6	#4	STR	7'-3"	29
V4	6	#4	STR	6'-0"	24
V5	6	#4	STR	4'-10"	19
V6	4	#4	STR	9'-3"	25
V7	6	#4	STR	8'-5"	34
V8	8	#4	STR	7'-2"	38
V9	8	#4	STR	6'-0"	32
V10	8	#4	STR	4'-9"	25
Z1	4	#5	4	6'-9"	28
Z2	4	#5	4	6'-2"	26
Z3	6	#5	4	5'-3"	33
Z4	6	#4	4	4'-3"	17
Z5	6	#4	4	3'-4"	13
Z6	4	#5	4	6'-8"	28
Z7	6	#5	4	6'-1"	38
Z8	8	#5	4	5'-2"	43
Z9	8	#4	4	4'-3"	23
Z10	8	#4	4	3'-4"	18

REINFORCING STEEL FOR 4 WINGS 1957 LBS

CLASS A CONCRETE

4 WINGS	27.7	CY
2 HEADWALLS	2.5	CY
2 END CURTAIN WALLS	3.2	CY
1 SILL	1.0	CY
TOTAL	34.4	CY

PROJECT NO. 42572
COUNTY: IREDELL
STATION: 15+19.00
REPLACES BRIDGE NO. 350

STATE OF NORTH CAROLINA
DEPARTMENT OF TRANSPORTATION
RALEIGH

WINGS FOR
CONCRETE BOX CULVERT
H = 9'-0" SLOPE = 2:1
77° 00'00" SKEW

NOT TO SCALE

Florence & Hutcheson
CONSULTING ENGINEERS
5121 Kingdom Way, Suite 100 Raleigh, NC 27607
NC License No: F-0258

NORTH CAROLINA PROFESSIONAL SEAL 20532 ENGINEER JAMES E. MONDOLFI
10-1-10

REVISIONS						SHEET NO.
NO.	BY	DATE	NO.	BY	DATE	3
1			3			TOTAL SHEETS
2			4			16

DRAWN BY: D.H. CARTER DATE: NOV 2009
CHECKED BY: J.E. MONDOLFI DATE: NOV 2009

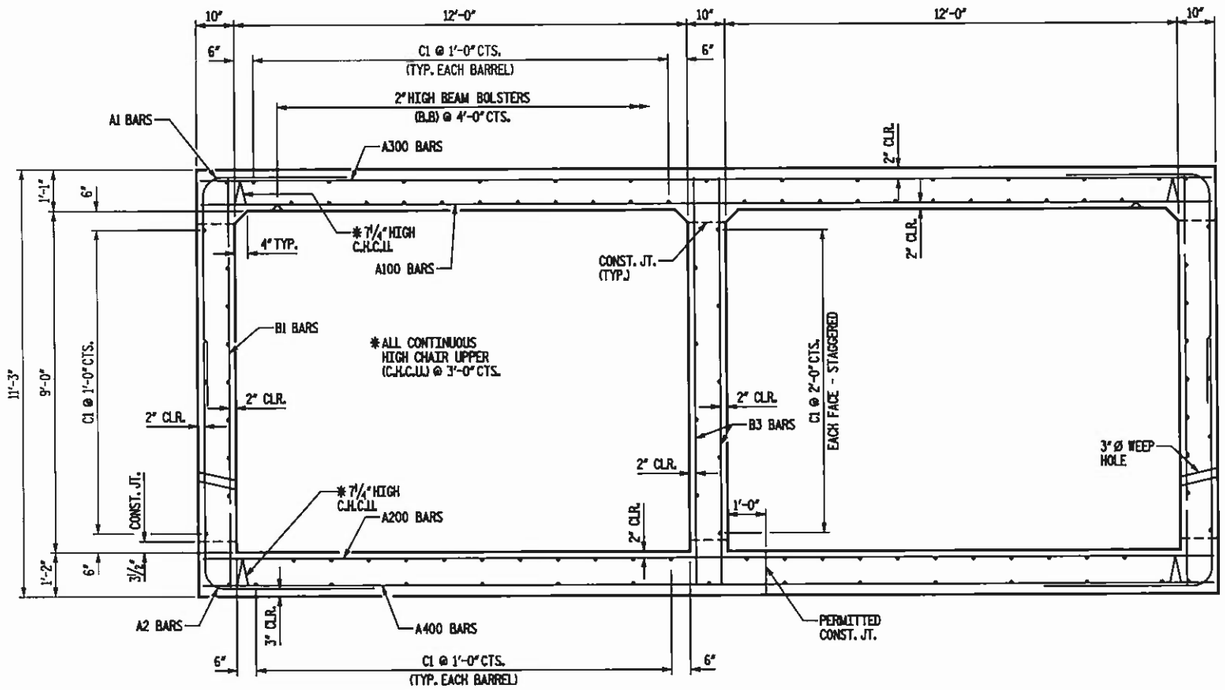

RIGHT ANGLE SECTION OF BARREL

THERE ARE 103 "C" BARS IN SECTION OF BARREL.

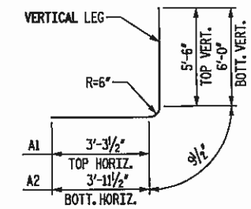

BAR TYPE 6

BAR DIMENSIONS ARE OUT TO OUT

SPLICE LENGTH CHART

BAR	SIZE	SPLICE LENGTH
A200	5	2'-2"
A400	7	3'-0"
B1	5	2'-2"
B3	4	1'-9"
C1	4	1'-11"
A1	5	1'-8"

TOTAL STRUCTURE QUANTITIES

CLASS A CONCRETE				
BARREL @	3.050	CY/FT	192.2	C.Y.
WING ETC.			34.4	C.Y.
TOTAL			226.6	C.Y.
REINFORCING STEEL				
BARREL			33,437	LBS.
WINGS ETC.			1,957	LBS.
TOTAL			35,394	LBS.
CULVERT EXCAVATION				LUMP SUM

REINFORCING STEEL BAR SCHEDULE

LOCATION		BAR	NO.	SIZE	TYPE	LENGTH	WEIGHT	H LEG	V LEG
TOP SLAB POSV	MAIN	A100	92	6	STR	26'-2"	3616		
TOP SLAB POSV	CUTS	A101	4	6	STR	20'-1"	121		
		A102	4	6	STR	14'-8"	88		
		A103	4	6	STR	9'-3"	56		
		A104	4	6	STR	3'-10"	23		
BOT SLAB POSV	MAIN	A200	105	5	STR	26'-2"	2866		
BOT SLAB POSV	CUTS	A201	4	5	STR	20'-10"	87		
		A202	4	5	STR	16'-1"	67		
		A203	4	5	STR	11'-5"	48		
		A204	4	5	STR	6'-9"	28		
		A205	4	5	STR	2'-1"	9		
TOP SLAB NEGV	MAIN	A300	124	6	STR	26'-2"	4873		
TOP SLAB NEGV	CUTS	A301	4	6	STR	21'-2"	127		
		A302	4	6	STR	17'-9"	107		
		A303	4	6	STR	14'-3"	86		
		A304	4	6	STR	10'-9"	65		
		A305	4	6	STR	7'-4"	44		
		A306	4	6	STR	3'-10"	23		
BOT SLAB NEGV	MAIN	A400	124	6	STR	26'-2"	4874		
BOT SLAB NEGV	CUTS	A401	4	6	STR	21'-2"	127		
		A402	4	6	STR	16'-10"	101		
		A403	4	6	STR	12'-6"	75		
		A404	4	6	STR	8'-2"	49		
		A405	4	6	STR	3'-10"	23		
CORNER (TOP)		A1	272	5	6	9'-7"	2719	3'-3½"	5'-6"
CORNER (BOTTOM)		A2	272	6	6	10'-9"	4392	3'-11½"	6'-0"
EXTWALL IN		B1	152	5	STR	10'-10"	1665		
INTWALL		B3	189	4	STR	10'-10"	1368		
LONGTD (3)		C1	309	4	STR	22'-4"	4610		
HEADWL (1)		G1	8	5	STR	26'-10"	224		
ENDS (1)		S2	12	8	STR	26'-10"	860		
STILL (1)		D1	4	6	STR	2'-7"	16		
					REINFORCING STEEL		33,437 LBS.		

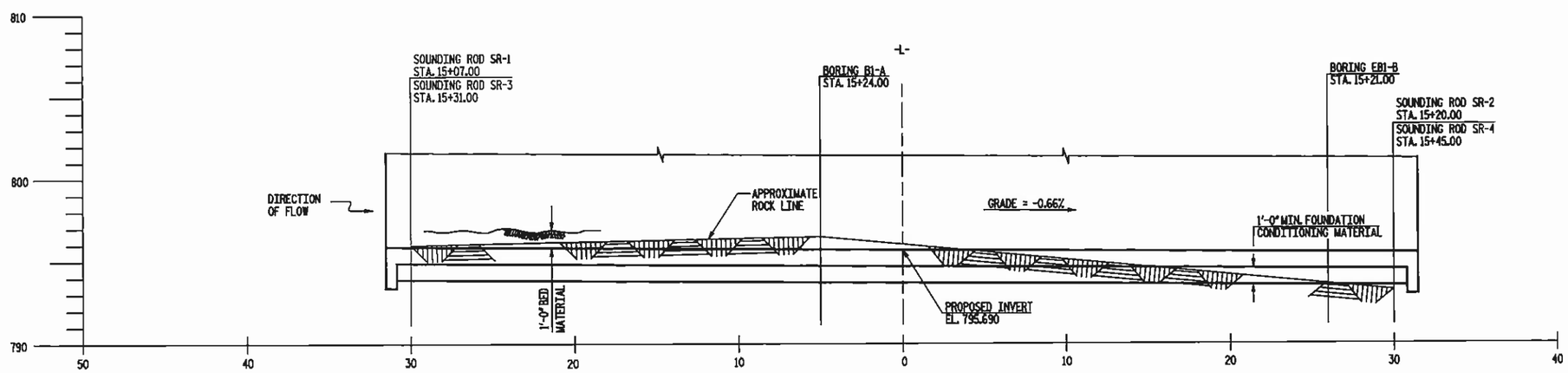

ROCK PROFILE ALONG ℄ CULVERT

(LOOKING STATION AHEAD)

NOT TO SCALE

PROJECT NO. 42572
COUNTY: IREDELL
STATION: 15+19.00
REPLACES BRIDGE NO. 350

STATE OF NORTH CAROLINA
DEPARTMENT OF TRANSPORTATION
RALEIGH

DOUBLE 12 FT. X 9 FT.
CONCRETE BOX CULVERT
77° 00'00" SKEW

Florence & Hutcheson
CONSULTING ENGINEERS
5121 Kingdom Way, Suite 100 Raleigh, NC 27607
NC License No: F-0258

NORTH CAROLINA PROFESSIONAL SEAL 20532 ENGINEER JAMES E. MONDOLFI
10-1-10

REVISIONS						SHEET NO.
NO.	BY	DATE	NO.	BY	DATE	4
1			3			TOTAL SHEETS
2			4			16

DRAWN BY: D.H. CARTER DATE: NOV 2009
CHECKED BY: J.E. MONDOLFI DATE: NOV 2009

PLOT: 6/15/2010 12:44:48 PM Fox & Associates, P.C.
FILE NAME: P:\PROJ\15-1271-sub1_STR\MODEL\Structure\MAIN\B_R14.dgn

8/17/99

DATUM DESCRIPTION

THE LOCALIZED COORDINATE SYSTEM DEVELOPED FOR THIS PROJECT IS BASED ON THE STATE PLANE COORDINATES ESTABLISHED BY OTHERS FOR MONUMENT "BL-2"
WITH NAD 83 STATE PLANE GRID COORDINATES OF
NORTHING: 815068.241(M) EASTING: 1481047.884(M)
THE AVERAGE COMBINED GRID FACTOR USED ON THIS PROJECT (GROUND TO GRID) IS: 0.999258256
THE N.C. LAMBERT GRID BEARING AND LOCALIZED HORIZONTAL GROUND DISTANCE FROM "BL-2" TO -L- STATION 12+50 IS
N 74° 04' 44.7" E 53.571'
ALL LINEAR DIMENSIONS ARE LOCALIZED HORIZONTAL DISTANCES
VERTICAL DATUM USED IS NAVD 88

GRAPHIC SCALE
50 0 50 100

PROJECT REFERENCE NO.	SHEET NO.
BK-5121	
R/W SHEET NO.	

ROADWAY DESIGN ENGINEER: NORTH CAROLINA PROFESSIONAL SEAL 18669 ENGINEER BRIAN ALLEN WILKS 01/10

HYDRAULICS ENGINEER: NORTH CAROLINA PROFESSIONAL SEAL 19732 ENGINEER SHIHCHEN FUH 10-01-10

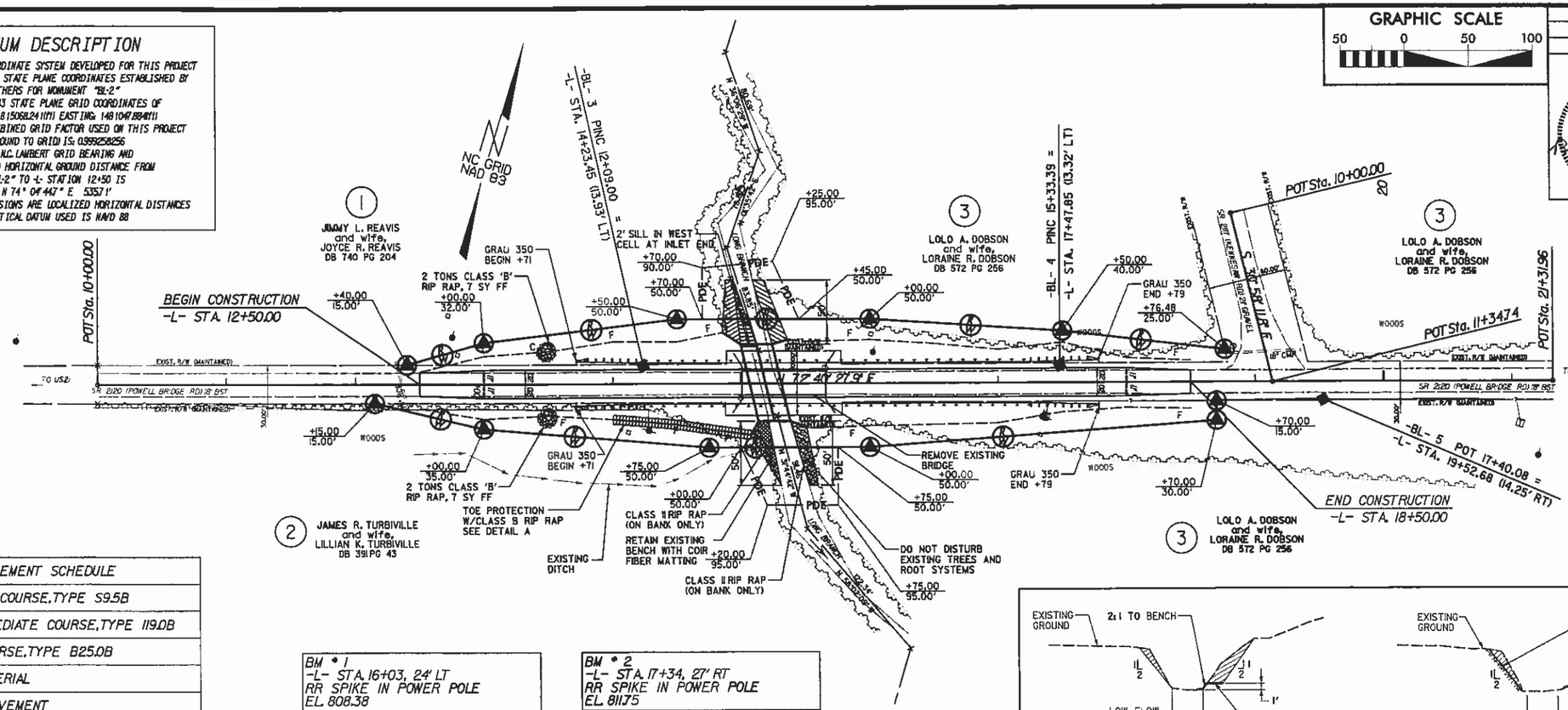

DETAIL A
TOE PROTECTION (Not to Scale)
Type of Liner: Class B Rip-Rap
FROM STA. 14+00 TO STA. 15+10 RT.
TO ROSWELL ROAD

PAVEMENT SCHEDULE	
(C)	3" SURFACE COURSE, TYPE S9.5B
(D)	2½" INTERMEDIATE COURSE, TYPE I19.0B
(E)	4" BASE COURSE, TYPE B25.0B
(T)	EARTH MATERIAL
(U)	EXISTING PAVEMENT

BM # 1
-L- STA. 16+03, 24' LT
RR SPIKE IN POWER POLE
EL. 808.38

BM # 2
-L- STA. 17+34, 27' RT
RR SPIKE IN POWER POLE
EL. 811.75

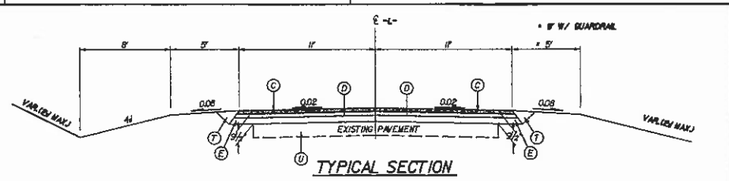

TYPICAL SECTION

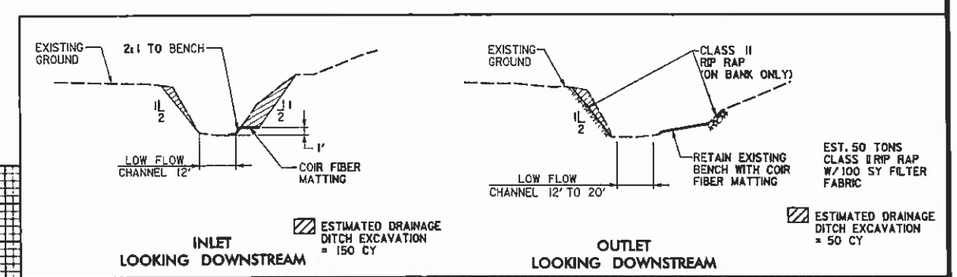

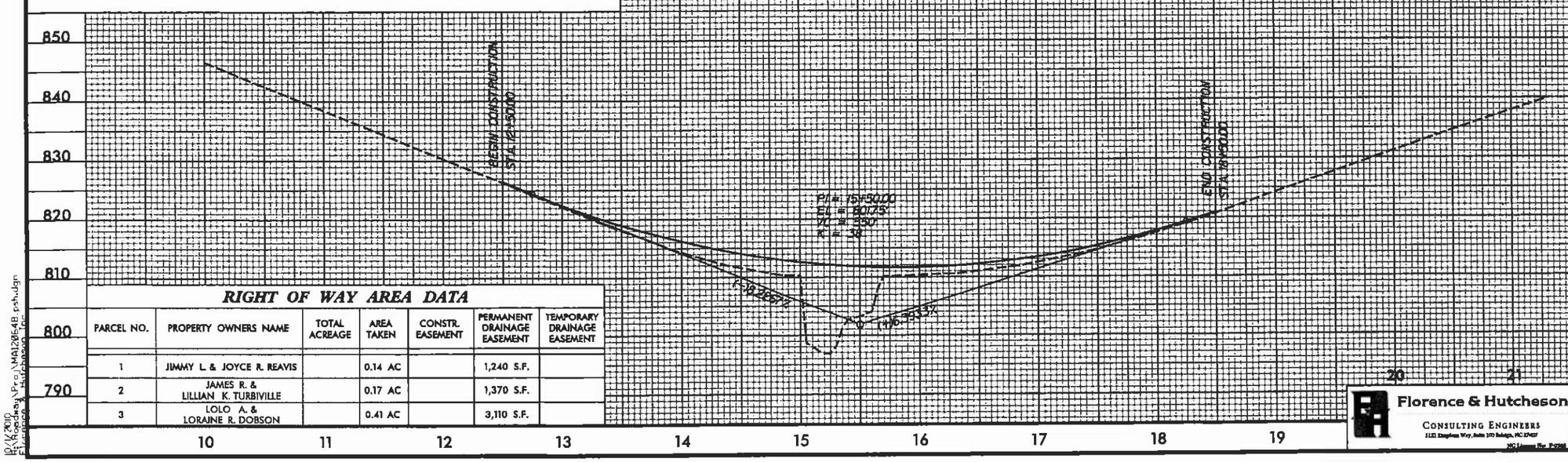

RIGHT OF WAY AREA DATA

PARCEL NO.	PROPERTY OWNERS NAME	TOTAL ACREAGE	AREA TAKEN	CONSTR. EASEMENT	PERMANENT DRAINAGE EASEMENT	TEMPORARY DRAINAGE EASEMENT
1	JIMMY L. & JOYCE R. REAVIS		0.14 AC		1,240 S.F.	
2	JAMES R. & LILLIAN K. TURBIVILLE		0.17 AC		1,370 S.F.	
3	LOLO A. & LORAINE R. DOBSON		0.41 AC		3,110 S.F.	

PROJECT NO. 42572
COUNTY: IREDELL
STATION: 15+19
REPLACES BRIDGE NO. 350

STATE OF NORTH CAROLINA
DEPARTMENT OF TRANSPORTATION
RALEIGH

CULVERT ON SR 2120 OVER LONG BRANCH

Florence & Hutcheson
CONSULTING ENGINEERS
1121 Kingdom Way, Suite 100 Raleigh, NC 27603
NC License No. F-2588

REVISIONS						
NO.	BY	DATE	NO.	BY	DATE	
1			3			
2			4			

SHEET 5 TOTAL SHEETS 16

R:\K2010 Finalsdesig\Proj\MA12854B psh.dgn

EROSION CONTROL PLAN

GRAPHIC SCALE
50 0 50 100

PROJECT REFERENCE NO.	SHEET NO.
BK-5121	EC-1
R/W SHEET NO.	
ROADWAY DESIGN ENGINEER	HYDRAULICS ENGINEER

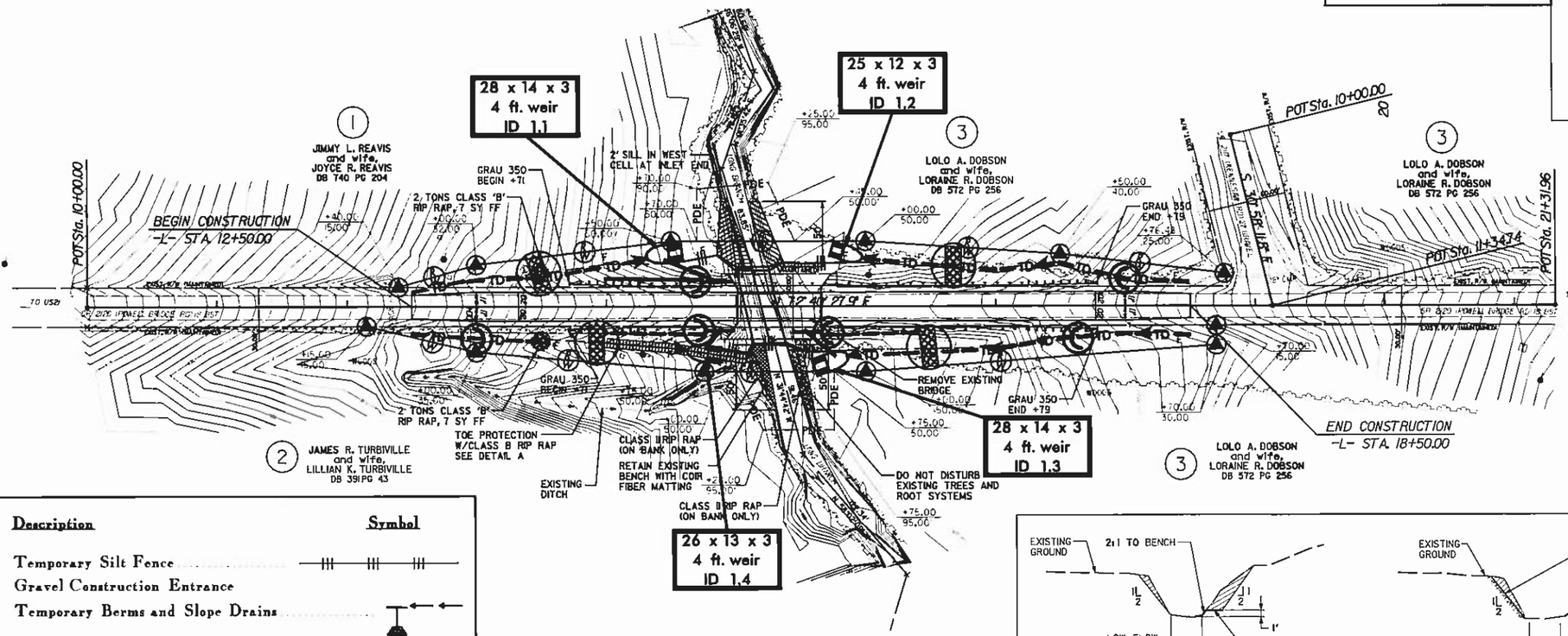

DETAIL A
TOE PROTECTION
(Not to Scale)

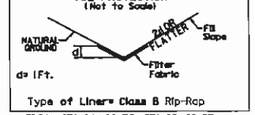

Type of Liner= Class B Rip-Rap
FROM STA. 14+00 TO STA. 15+10 RT.

Std. #	Description	Symbol
1605.01	Temporary Silt Fence	
1607.01	Gravel Construction Entrance	
1622.01	Temporary Berms and Slope Drains	
1630.05	Temporary Diversion	TD
1630.06	Special Stilling Basin	
1633.01	Temporary Rock Silt Check Type-A	
	Temporary Rock Silt Check Type-A with Matting and Polyacrylamide (PAM)	
	Temporary Rock Silt Check Type-B	
	Wattle with Polyacrylamide (PAM)	
1634.02	Temporary Rock Sediment Dam Type-B	

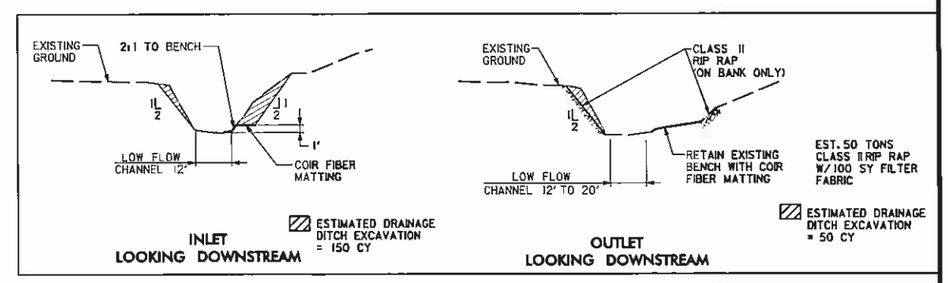

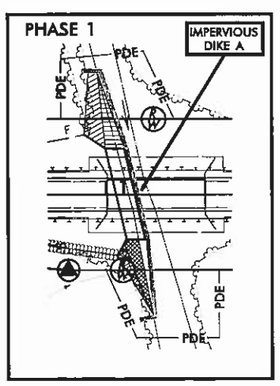

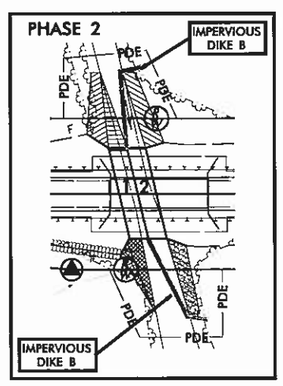

CULVERT CONSTRUCTION SEQUENCE

PHASE 1

1. UTILIZE SPECIAL STILLING BASIN(S) AS NEEDED THROUGHOUT CULVERT CONSTRUCTION.
2. CONSTRUCT IMPERVIOUS DIKE A.
3. CONSTRUCT CULVERT BARREL 1 AND INLET/OUTLET CHANNEL IMPROVEMENTS.
4. REMOVE IMPERVIOUS DIKE A.

PHASE 2

5. CONSTRUCT IMPERVIOUS DIKES B, DIVERTING FLOW THROUGH CULVERT BARREL 1.
6. CONSTRUCT CULVERT BARREL 2, AND COMPLETE INLET/OUTLET CHANNEL IMPROVEMENTS.
7. REMOVE IMPERVIOUS DIKES B.
8. CONSTRUCT 2 FT. SILL AT INLET OF CULVERT BARREL 1.
9. REMOVE ANY REMAINING SPECIAL STILLING BASIN(S), AND COMPLETE ROADWAY.

ROADSIDE ENVIRONMENTAL UNIT
DEPARTMENT OF TRANSPORTATION
DIVISION OF HIGHWAYS
RALEIGH, N.C.

2006 STANDARD SPECIFICATIONS

NOTES: ANY DEVIATION FROM OPTIONS GIVEN WILL REQUIRE PRIOR APPROVAL BY ENGINEER.

ADDITIONAL EROSION CONTROL DEVICES MAY NEED TO BE INSTALLED AS DIRECTED BY THE ENGINEER.

EROSION CONTROL PLAN AND DETAILS ARE PROVIDED BY THE NCDOT ROADSIDE ENVIROMENTAL UNIT

PROJECT NO. 42572
COUNTY: IREDELL
STATION: 15+19
REPLACES BRIDGE NO. 350

STATE OF NORTH CAROLINA
DEPARTMENT OF TRANSPORTATION
RALEIGH

CULVERT ON SR 2120
OVER LONG BRANCH

REVISIONS						SHEET NO.
NO.	BY	DATE	NO.	BY	DATE	6
1			3			TOTAL SHEETS
2			4			16

$$$

PROJECT REFERENCE NO.	SHEET NO.
BK-5121	EC-2
R/W SHEET NO.	
ROADWAY DESIGN ENGINEER	HYDRAULICS ENGINEER

TEMPORARY ROCK SILT CHECK TYPE 'B' DETAIL

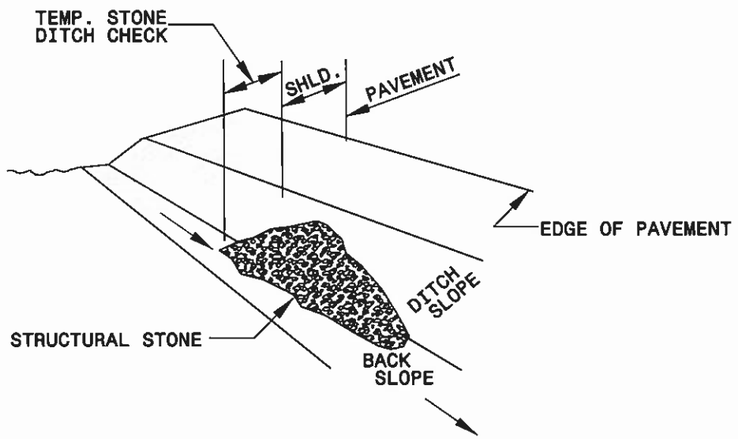

ISOMETRIC VIEW

NOTES:

USE CLASS 'B' EROSION CONTROL STONE FOR STRUCTURAL STONE.

THE ENGINEER MAY DIRECT THE OPTION OF CLASS "A" STONE FOR SITES HAVING LESS THAN ONE (1) ACRE DRAINAGE AREA AND A DITCH GRADE LESS THAN 3%.

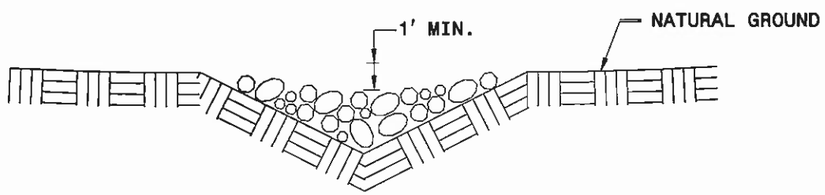

CROSS SECTION VEE DITCH

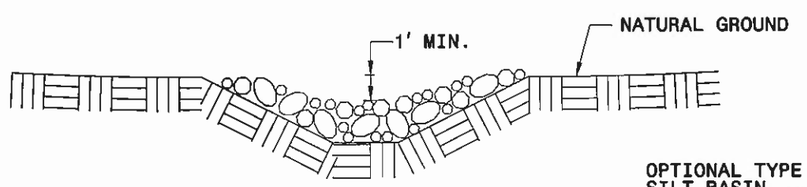

CROSS SECTION TRAPEZOIDAL DITCH

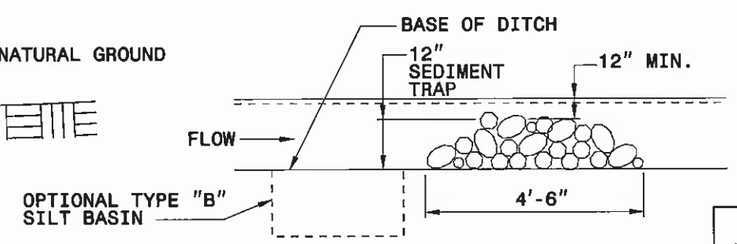

ELEVATION VIEW

ROADSIDE ENVIRONMENTAL UNIT
DEPARTMENT OF TRANSPORTATION
DIVISION OF HIGHWAYS
RALEIGH, N.C.

2006 STANDARD SPECIFICATIONS

NOTES: ANY DEVIATION FROM OPTIONS GIVEN WILL REQUIRE PRIOR APPROVAL BY ENGINEER.

ADDITIONAL EROSION CONTROL DEVICES MAY NEED TO BE INSTALLED AS DIRECTED BY THE ENGINEER.

EROSION CONTROL PLAN AND DETAILS ARE PROVIDED BY THE NCDOT ROADSIDE ENVIROMENTAL UNIT

PROJECT NO. 42572
COUNTY: IREDELL
STATION: 15+19
REPLACES BRIDGE NO. 350

STATE OF NORTH CAROLINA
DEPARTMENT OF TRANSPORTATION
RALEIGH

CULVERT ON SR 2120
OVER LONG BRANCH

REVISIONS						SHEET NO.
NO.	BY	DATE	NO.	BY	DATE	7
1			3			TOTAL SHEETS
2			4			16

PROJECT REFERENCE NO.	SHEET NO.
BK-5121	EC-3
R/W SHEET NO.	
ROADWAY DESIGN ENGINEER	HYDRAULICS ENGINEER

COIR FIBER BAFFLE DETAIL

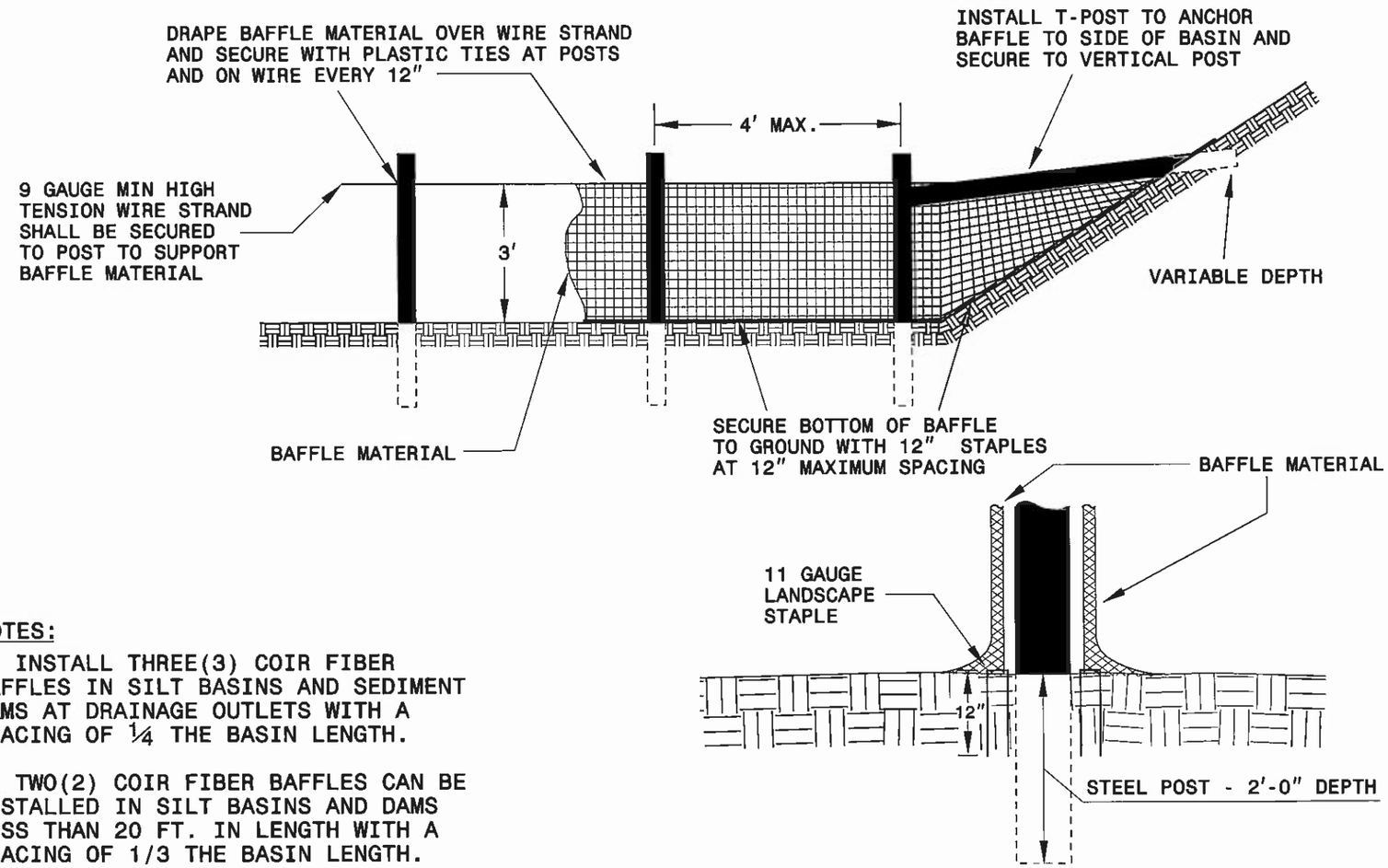

BAFFLE MATERIAL SHALL BE SECURED TO THE BOTTOM AND SIDES OF BASIN USING 12" LANDSCAPE STAPLES

NOTES:

1. INSTALL THREE(3) COIR FIBER BAFFLES IN SILT BASINS AND SEDIMENT DAMS AT DRAINAGE OUTLETS WITH A SPACING OF ¼ THE BASIN LENGTH.

2. TWO(2) COIR FIBER BAFFLES CAN BE INSTALLED IN SILT BASINS AND DAMS LESS THAN 20 FT. IN LENGTH WITH A SPACING OF 1/3 THE BASIN LENGTH.

3. TOP HEIGHT OF COIR FIBER BAFFLES SHALL NOT BE BELOW BASE OF EMERGENCY SPILLWAY ELEVATION.

EROSION CONTROL PLAN AND DETAILS ARE PROVIDED BY THE NCDOT ROADSIDE ENVIROMENTAL UNIT

ROADSIDE ENVIRONMENTAL UNIT
DEPARTMENT OF TRANSPORTATION
DIVISION OF HIGHWAYS
RALEIGH, N.C.

2006 STANDARD SPECIFICATIONS

NOTES: ANY DEVIATION FROM OPTIONS GIVEN WILL REQUIRE PRIOR APPROVAL BY ENGINEER.

ADDITIONAL EROSION CONTROL DEVICES MAY NEED TO BE INSTALLED AS DIRECTED BY THE ENGINEER.

PROJECT NO. 42572
COUNTY: IREDELL
STATION: 15+19
REPLACES BRIDGE NO. 350

STATE OF NORTH CAROLINA
DEPARTMENT OF TRANSPORTATION
RALEIGH

CULVERT ON SR 2120
OVER LONG BRANCH

REVISIONS						SHEET NO.
NO.	BY	DATE	NO.	BY	DATE	8
1			3			TOTAL SHEETS
2			4			16

PROJECT REFERENCE NO.	SHEET NO.
BK-5121	EC-4
R/W SHEET NO.	
ROADWAY DESIGN ENGINEER	HYDRAULICS ENGINEER

WATTLE WITH POLYACRYLAMIDE (PAM) DETAIL

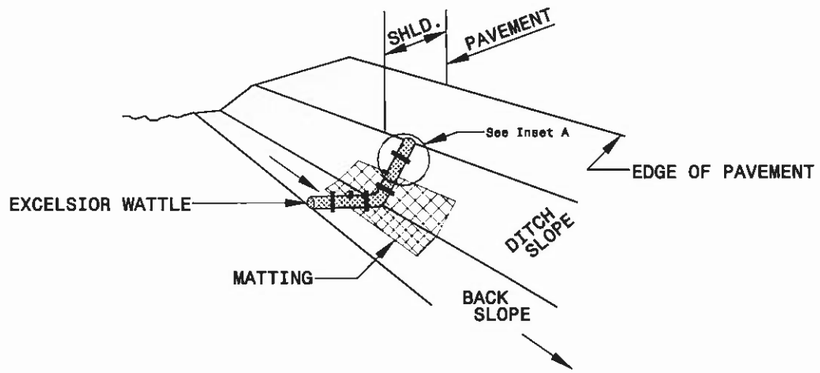

ISOMETRIC VIEW

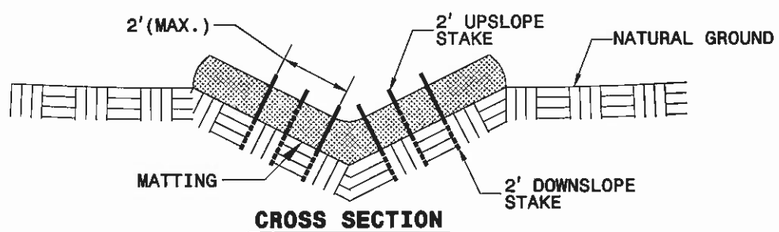

CROSS SECTION VEE DITCH

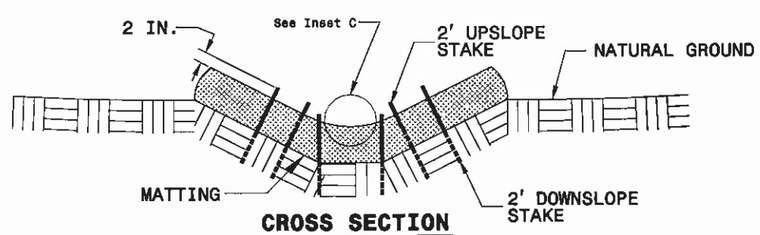

CROSS SECTION TRAPEZOIDAL DITCH

NOTES:

USE MINIMUM 12 IN. DIAMETER EXCELSIOR WATTLE.

USE 2 FT. WOODEN STAKES WITH A 2 IN. BY 2 IN. NOMINAL CROSS SECTION.

ONLY INSTALL WATTLE(S) TO A HEIGHT IN DITCH SO FLOW WILL NOT WASH AROUND WATTLE AND SCOUR DITCH SLOPES AND AS DIRECTED.

INSTALL A MINIMUM OF 2 UPSLOPE STAKES AND 4 DOWNSLOPE STAKES AT AN ANGLE TO WEDGE WATTLE TO BOTTOM OF DITCH.

PROVIDE STAPLES MADE OF 0.125 IN. DIAMETER STEEL WIRE FORMED INTO A U SHAPE NOT LESS THAN 12" IN LENGTH.

INSTALL STAPLES APPROXIMATELY EVERY 1 LINEAR FOOT ON BOTH SIDES OF WATTLE AND AT EACH END TO SECURE IT TO THE SOIL.

INSTALL MATTING IN ACCORDANCE WITH SECTION 1631 OF THE STANDARD SPECIFICATIONS.

PRIOR TO POLYACRYLAMIDE (PAM) APPLICATION, OBTAIN A SOIL SAMPLE FROM PROJECT LOCATION, AND FROM OFFSITE MATERIAL, AND ANALYZE FOR APPROPRIATE PAM FLOCCULANT TO BE APPLIED TO EACH WATTLE.

INITIALLY APPLY 2 OUNCES OF ANIONIC OR NEUTRALLY CHARGED PAM OVER WATTLE WHERE WATER WILL FLOW AND 1 OUNCE OF PAM ON MATTING ON EACH SIDE OF WATTLE. REAPPLY PAM AFTER EVERY RAINFALL EVENT THAT IS EQUAL TO OR EXCEEDS 0.50 IN.

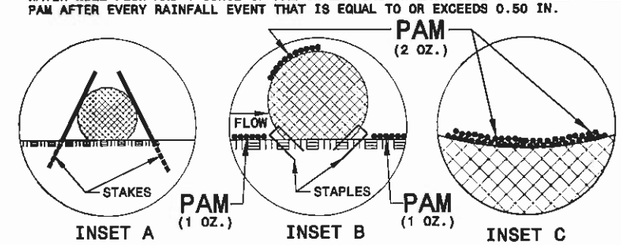

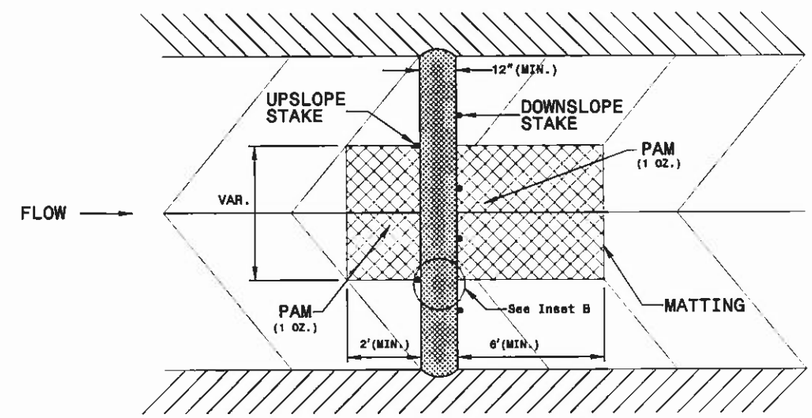

TOP VIEW

ROADSIDE ENVIRONMENTAL UNIT
DEPARTMENT OF TRANSPORTATION
DIVISION OF HIGHWAYS
RALEIGH, N.C.

2006 STANDARD SPECIFICATIONS

NOTES: ANY DEVIATION FROM OPTIONS GIVEN WILL REQUIRE PRIOR APPROVAL BY ENGINEER.

ADDITIONAL EROSION CONTROL DEVICES MAY NEED TO BE INSTALLED AS DIRECTED BY THE ENGINEER.

EROSION CONTROL PLAN AND DETAILS ARE PROVIDED BY THE NCDOT ROADSIDE ENVIROMENTAL UNIT

PROJECT NO. 42572
COUNTY: IREDELL
STATION: 15+19
REPLACES BRIDGE NO. 350

STATE OF NORTH CAROLINA
DEPARTMENT OF TRANSPORTATION
RALEIGH

CULVERT ON SR 2120
OVER LONG BRANCH

REVISIONS								SHEET NO.
NO.	BY	DATE	NO.	BY	DATE			9
1			3					TOTAL SHEETS
2			4					16

PROJECT REFERENCE NO.	SHEET NO.
BK-5121	EC-5
R/W SHEET NO.	
ROADWAY DESIGN ENGINEER	HYDRAULICS ENGINEER

TEMPORARY ROCK SILT CHECK TYPE 'A' WITH EXCELSIOR MATTING AND POLYACRYLAMIDE (PAM)

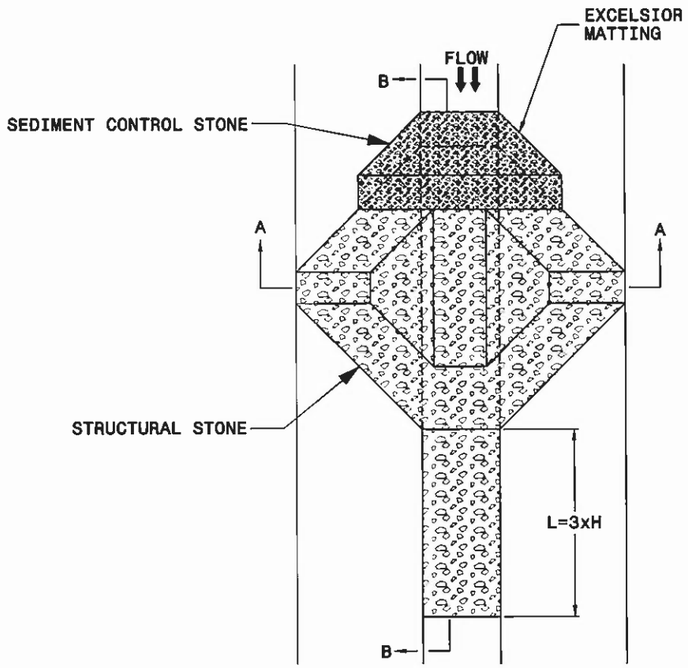

PLAN

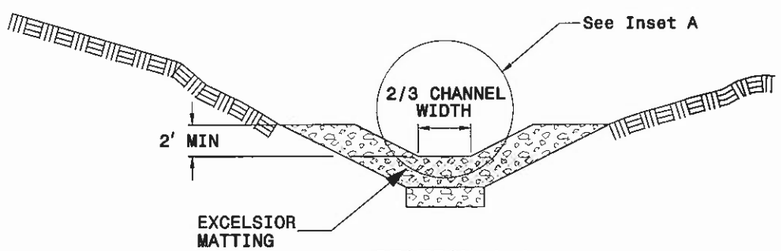

SECTION A-A

NOTES

USE EXCELSIOR FOR MATTING MATERIAL AND ANCHOR MATTING SECTION AT TOP AND BOTTOM WITH CLASS B STONE.

PRIOR TO POLYACRYLAMIDE (PAM) APPLICATION, OBTAIN A SOIL SAMPLE FROM PROJECT LOCATION, AND FROM OFFSITE MATERIAL, AND ANALYZE FOR APPROPRIATE PAM FLOCCULANT TO BE APPLIED TO EACH ROCK SILT CHECK.

INITIALLY APPLY 3.5 OUNCES OF POLYACRYLAMIDE (PAM) TO TOP OF MATTING SECTION AND AFTER EVERY RAINFALL EVENT THAT EQUALS OR EXCEEDS 0.50 INCHES.

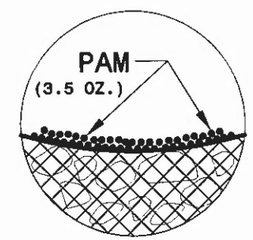

INSET A

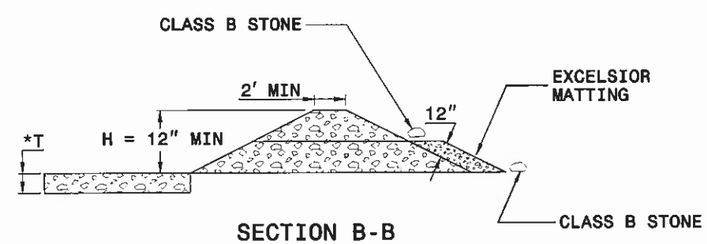

SECTION B-B

*T = 12" MIN., 18" MAX.

EROSION CONTROL PLAN AND DETAILS ARE PROVIDED BY THE NCDOT ROADSIDE ENVIROMENTAL UNIT

ROADSIDE ENVIRONMENTAL UNIT
DEPARTMENT OF TRANSPORTATION
DIVISION OF HIGHWAYS
RALEIGH, N.C.

2006 STANDARD SPECIFICATIONS

NOTES: ANY DEVIATION FROM OPTIONS GIVEN WILL REQUIRE PRIOR APPROVAL BY ENGINEER.

ADDITIONAL EROSION CONTROL DEVICES MAY NEED TO BE INSTALLED AS DIRECTED BY THE ENGINEER.

NOT TO SCALE

PROJECT NO. 42572
COUNTY: IREDELL
STATION: 15+19
REPLACES BRIDGE NO. 350

STATE OF NORTH CAROLINA
DEPARTMENT OF TRANSPORTATION
RALEIGH

CULVERT ON SR 2120
OVER LONG BRANCH

REVISIONS						SHEET NO.
NO.	BY	DATE	NO.	BY	DATE	10
1			3			TOTAL SHEETS
2			4			16

MATTING INSTALLATION DETAIL

PROJECT REFERENCE NO.	SHEET NO.
BK-5121	EC-6
R/W SHEET NO.	
ROADWAY DESIGN ENGINEER	HYDRAULICS ENGINEER

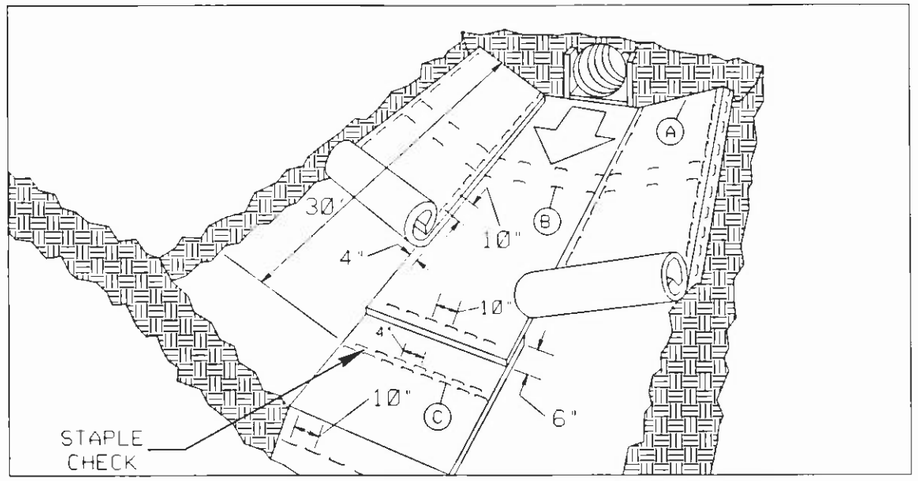

MATTING IN DITCHES

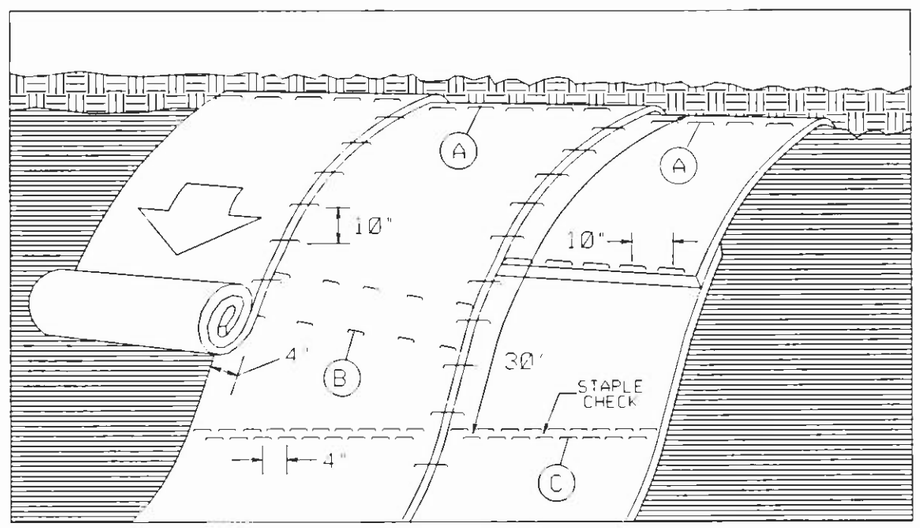

MATTING ON SLOPES

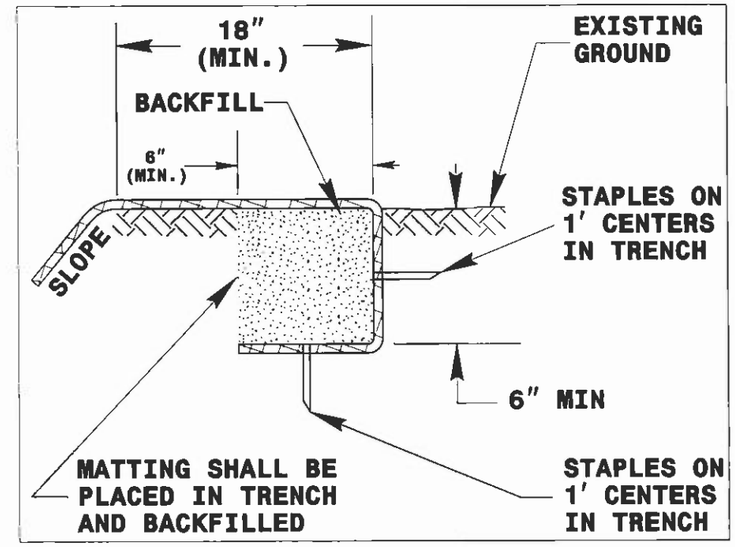

DIAGRAM (A)

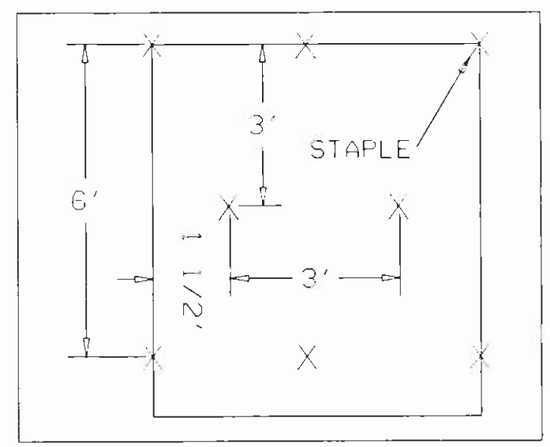

DIAGRAM (B)

STAPLE CHECK PATTERN

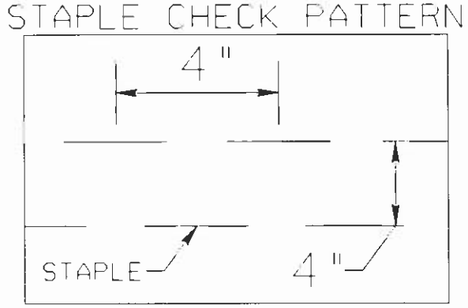

DIAGRAM (C)

ROADSIDE ENVIRONMENTAL UNIT
DEPARTMENT OF TRANSPORTATION
DIVISION OF HIGHWAYS
RALEIGH, N.C.

2006 STANDARD SPECIFICATIONS

NOTES: ANY DEVIATION FROM OPTIONS GIVEN WILL REQUIRE PRIOR APPROVAL BY ENGINEER.

ADDITIONAL EROSION CONTROL DEVICES MAY NEED TO BE INSTALLED AS DIRECTED BY THE ENGINEER.

NOTES:

THIS DETAIL APPLIES TO STRAW, EXCELSIOR, AND PERMANENT SOIL REINFORCEMENT MAT (PSRM) INSTALLATION.

STAPLES SHALL BE NO. 11 GAUGE STEEL WIRE FORMED INTO A "U" SHAPE WITH A MINIMUM THROAT WIDTH OF 1 INCH AND NOT LESS THAN 6 INCHES IN LENGTH.

EROSION CONTROL PLAN AND DETAILS ARE PROVIDED BY THE NCDOT ROADSIDE ENVIROMENTAL UNIT

PROJECT NO. 42572
COUNTY: IREDELL
STATION: 15+19
REPLACES BRIDGE NO. 350

STATE OF NORTH CAROLINA
DEPARTMENT OF TRANSPORTATION
RALEIGH

CULVERT ON SR 2120
OVER LONG BRANCH

REVISIONS						SHEET NO.
NO.	BY	DATE	NO.	BY	DATE	11
1			3			TOTAL SHEETS
2			4			16

$$$

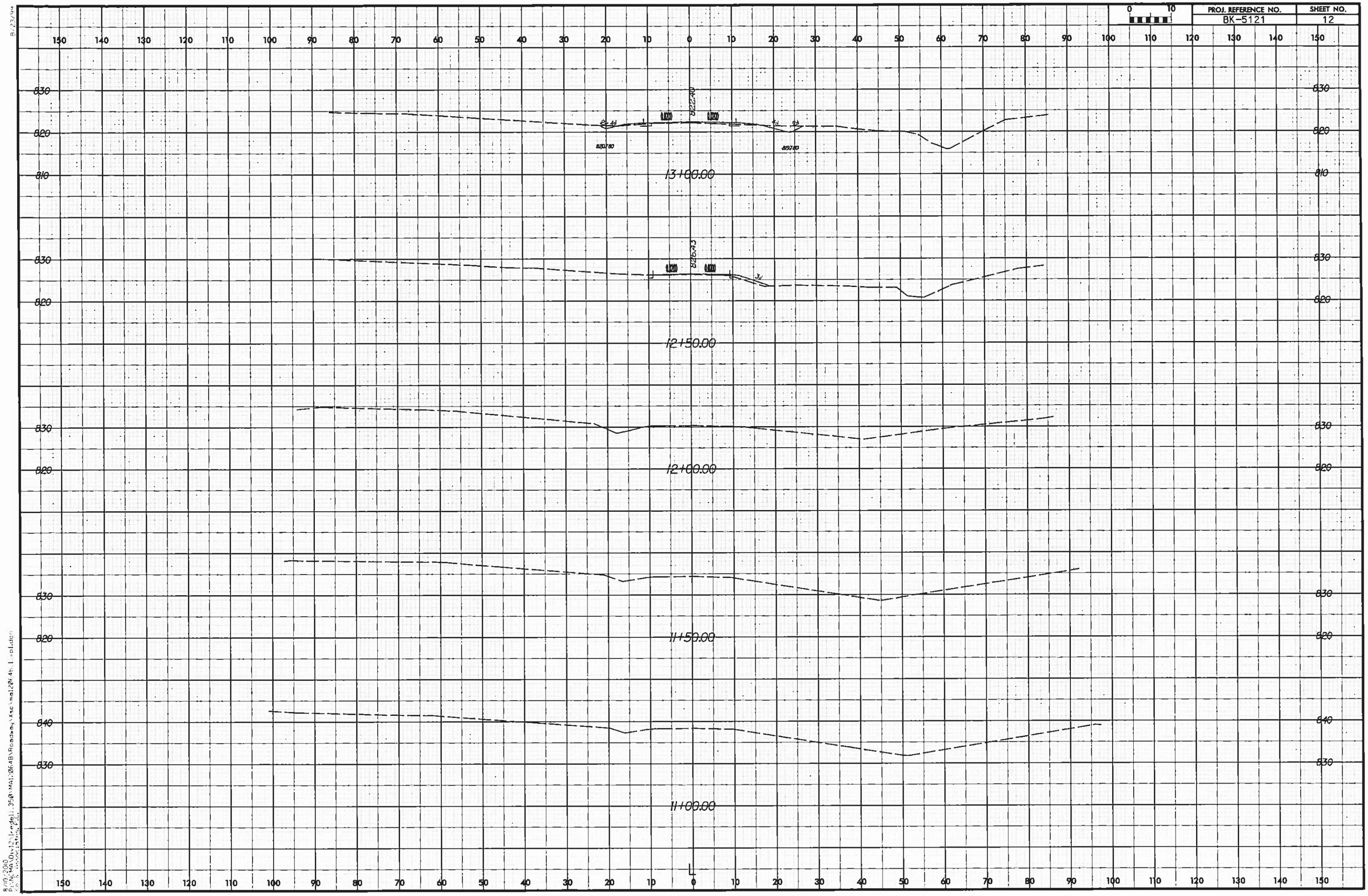
0 10
13+00.00
12+50.00
12+00.00
11+50.00
11+00.00
822.40
826.43
820.80
859.80
L

PROJ. REFERENCE NO.	SHEET NO.
BK-5121	13

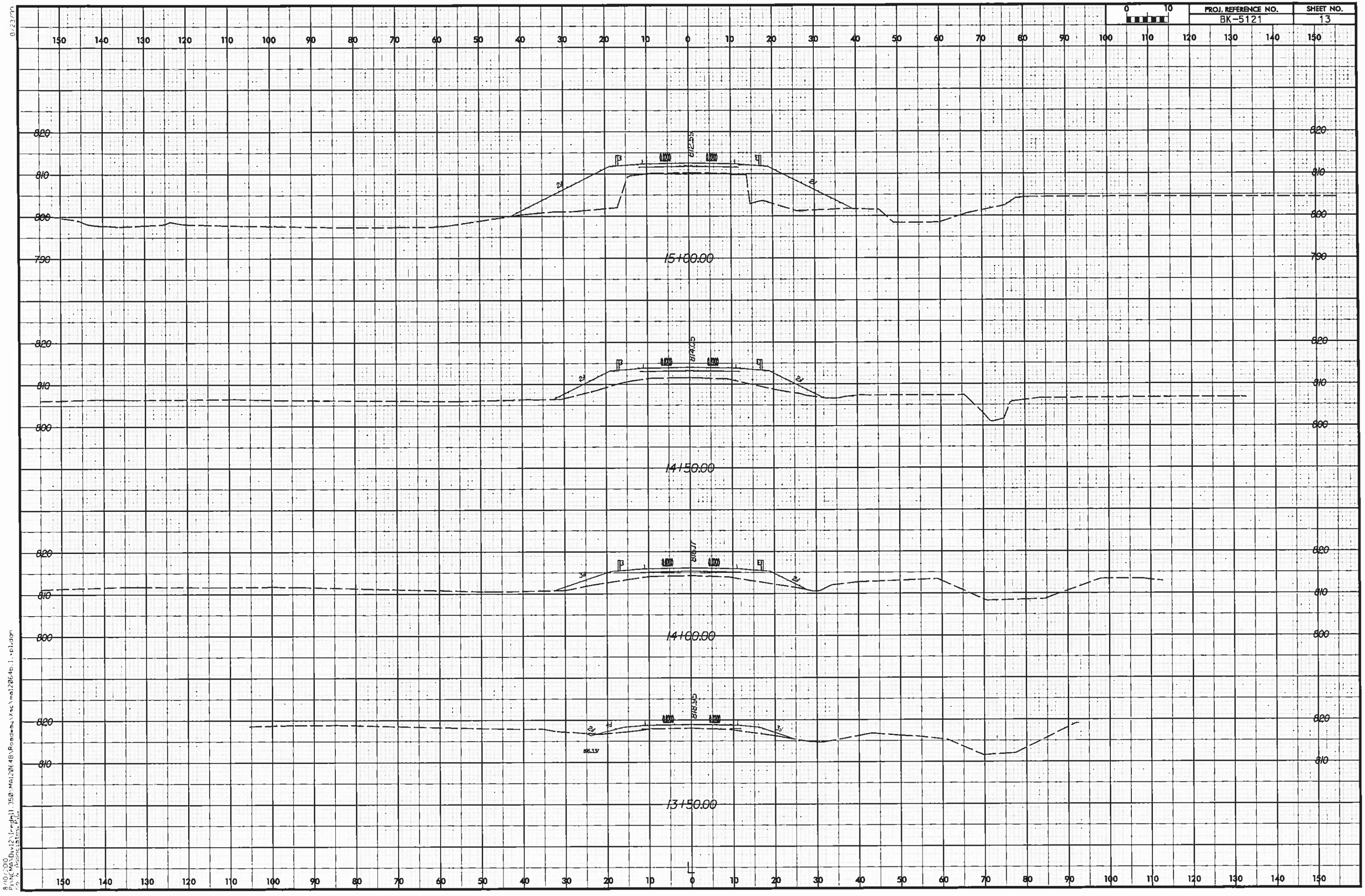

8/23/99

8/10/2010
P:\NCMA\Div12\Freight_350-Mai206_4B\Roadway\Xsc\ma12064b_1_xpl.dgn
FD & Associates, P.C.

PROJ. REFERENCE NO.	SHEET NO.
BK-5121	14

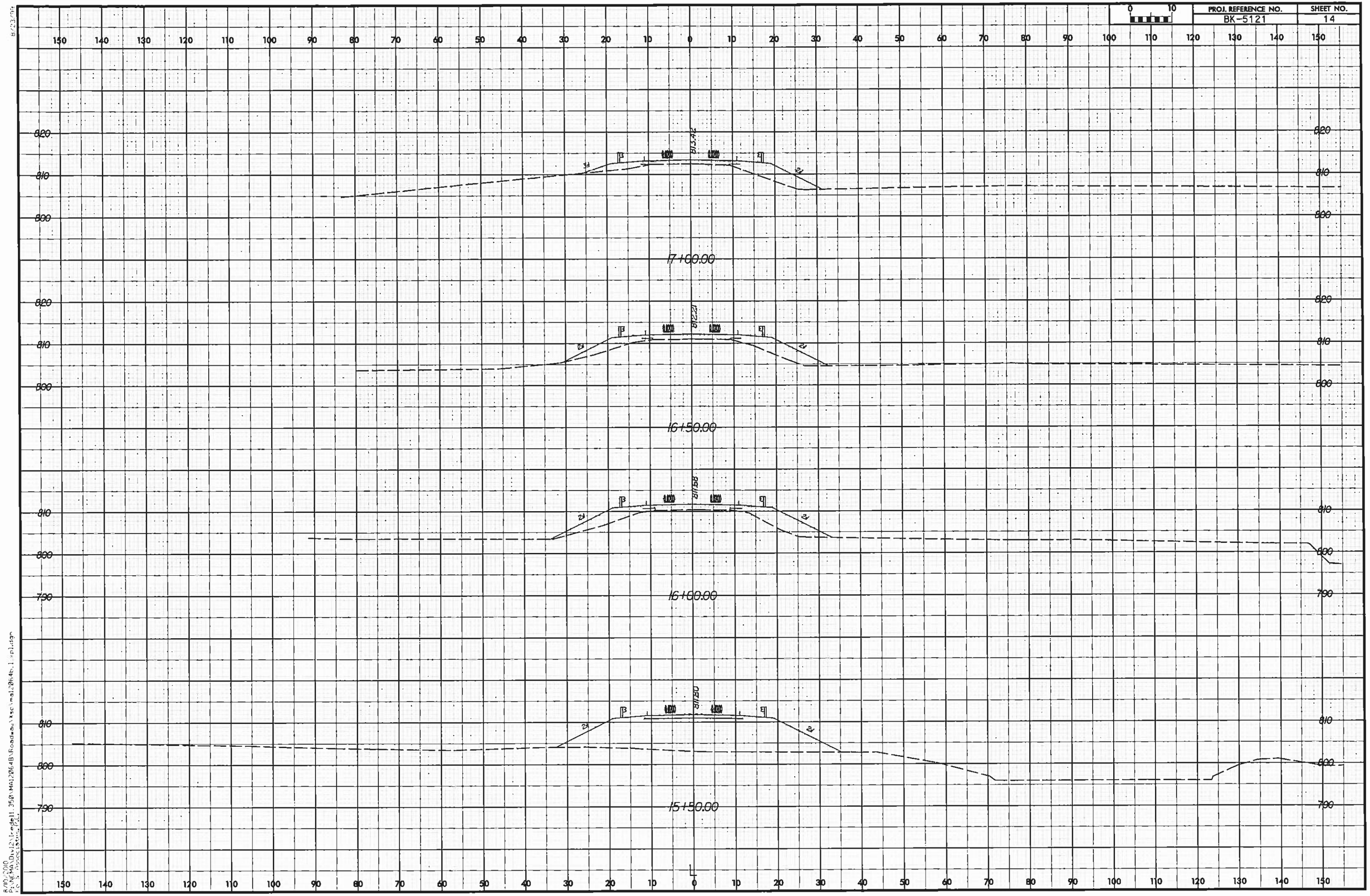

PROJ. REFERENCE NO.	SHEET NO.
BK-5121	15

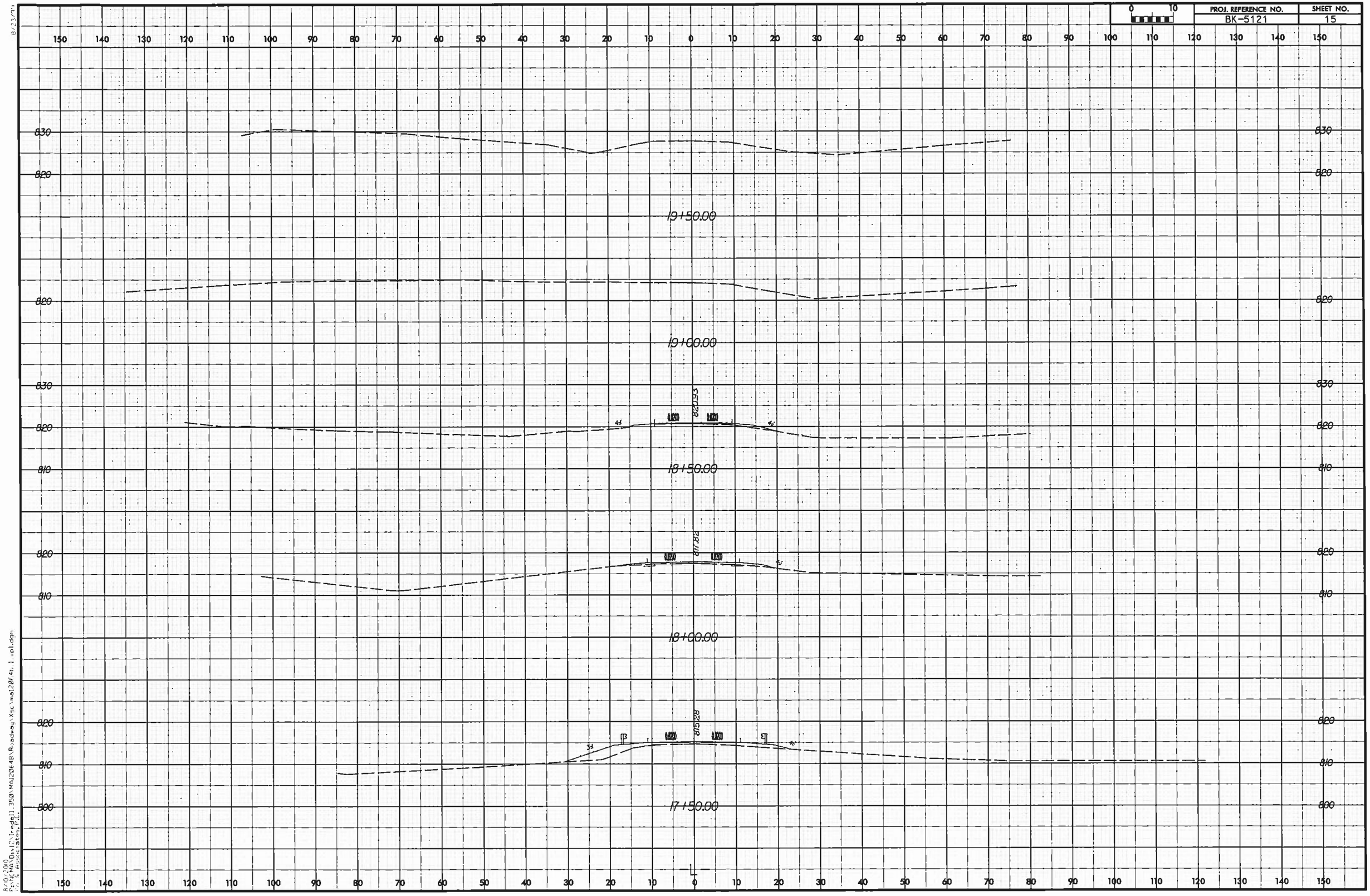
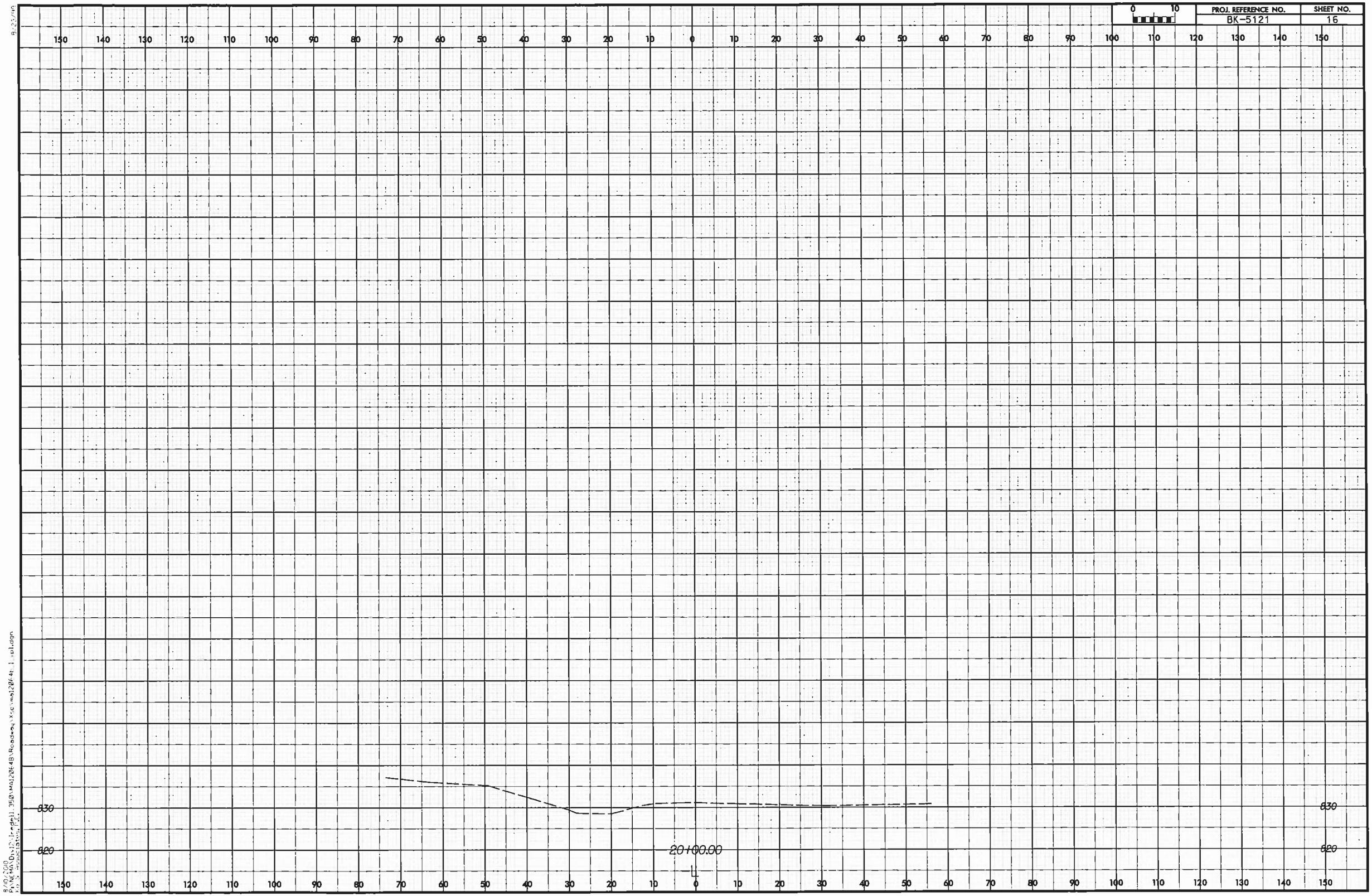
PROJ. REFERENCE NO.	SHEET NO.
BK-5121	16