CONTRACT # DO0087 BK-5110

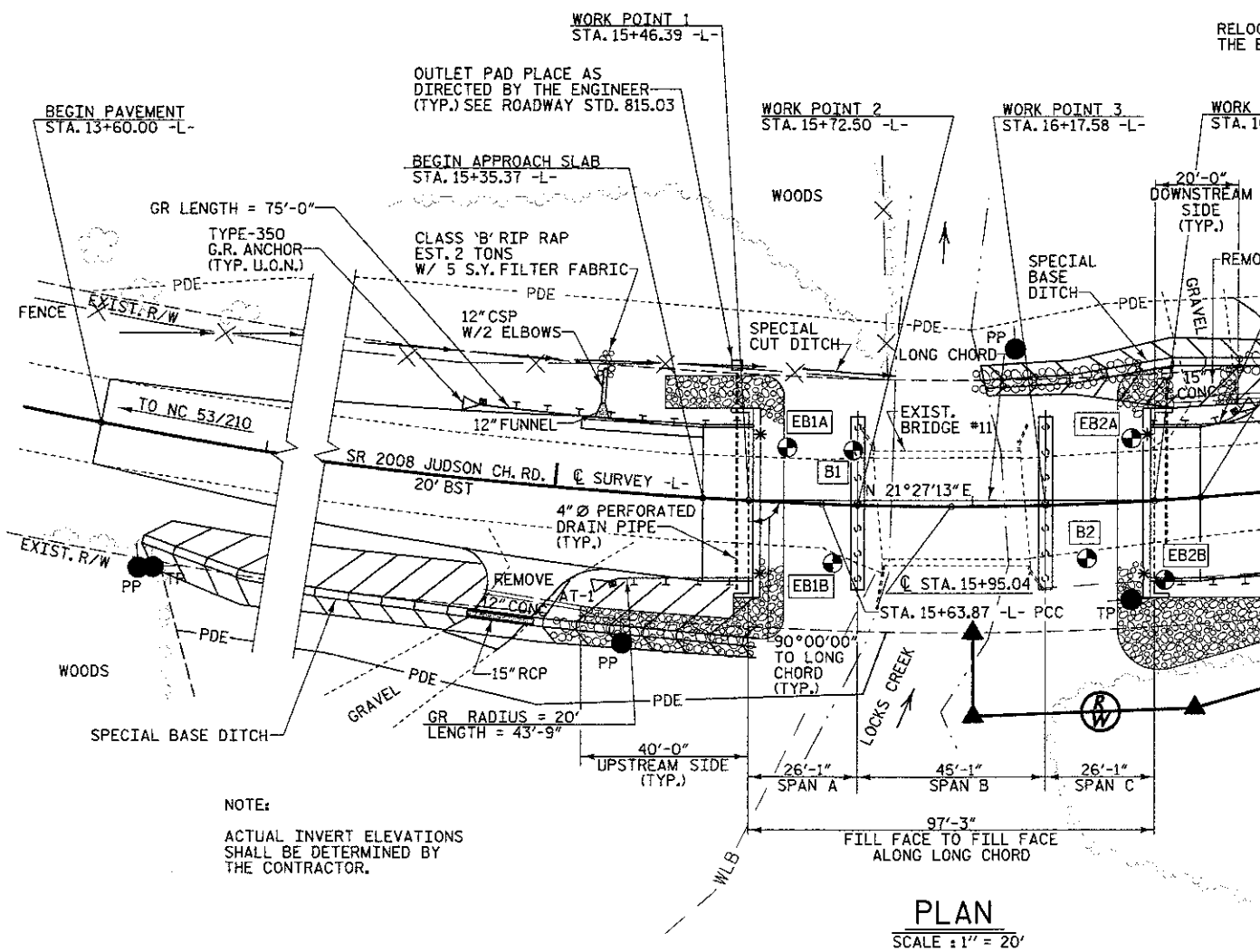

NOTE:

ACTUAL INVERT ELEVATIONS SHALL BE DETERMINED BY THE CONTRACTOR.

PLAN

SCALE : 1" = 20'

DENOTES GEO-TECH BORE HOLE LOCATIONS.

* DENOTES B-77 GUARDRAIL CONNECTION REQ'D., SEE SHEET 13

GUARDRAIL LENGTHS AS SHOWN INCLUDE ANCHOR UNITS.

U.O.N. - UNLESS OTHERWISE NOTED

FOR PAVEMENT LAYOUT, PDE & EASEMENT SEE "ROADWAY DETAILS" SHEET.

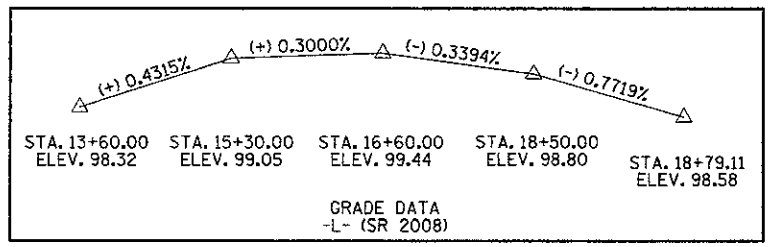

EXISTING BRIDGE No. 11
23'-10" CLEAR ROADWAY
SPANS: 1 @ 17'-11½ 1 @ 17'-4"
RC FLOOR ON TIMBER JOISTS
END BENTS & INTERIOR BENTS: TIM. CAP/ TIM. PILES

TBM :
"BENCHLITE" NAIL IN 28" PINE TREE
53.50' RT. OF -L- STA. 14+14.50
ELEV.= 99.86 NAVD 88

HYDROGRAPHIC DATA:

DESIGN DISCHARGE -	950 CFS
FREQUENCY OF DESIGN FLOOD -	25 YEAR
DESIGN HIGH WATER ELEVATION -	96.7
DRAINAGE AREA -	7.5 SQ. MI.
BASIC DISCHARGE (Q 100) -	1500 CFS
BASIC HIGH WATER ELEVATION -	98.1

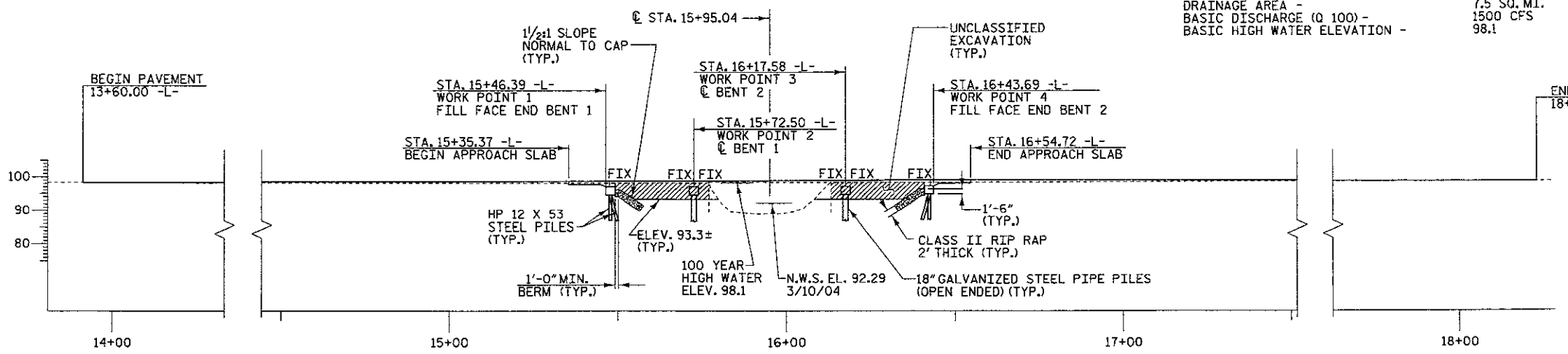

PROFILE ALONG ℄ SURVEY

SCALE : 1" = 20'

DENOTES ROADWAY FILL TO BE REMOVED

NOTES

ASSUMED LIVE LOAD = HS 20 OR ALTERNATE LOADING, EXCEPT THAT CORED SLAB UNITS HAVE BEEN DESIGNED FOR HS 25.

FOR EROSION CONTROL MEASURES SEE EROSION CONTROL PLANS.

REMOVAL OF THE EXISTING BRIDGE SHALL BE PERFORMED SO AS NOT TO ALLOW DEBRIS TO FALL INTO THE WATER. THE CONTRACTOR SHALL REMOVE THE BRIDGE AND SUBMIT PLANS FOR THE DEMOLITION IN ACCORDANCE WITH ARTICLE 402-2 OF THE STANDARD SPECIFICATIONS.

THE SUBSTRUCTURE OF THE EXISTING BRIDGE INDICATED ON THE PLANS IS FROM THE BEST INFORMATION AVAILABLE. SINCE THIS INFORMATION IS SHOWN FOR THE CONVENIENCE OF THE CONTRACTOR, THE CONTRACTOR SHALL HAVE NO CLAIM WHATSOEVER AGAINST THE DEPARTMENT OF TRANSPORTATION FOR ANY DELAYS OR ADDITIONAL COST INCURRED BASED ON DIFFFERENCES BETWEEN THE EXISTING BRIDGE SUBSTRUCTURE SHOWN ON THE PLANS AND THE ACTUAL CONDITIONS AT THE PROJECT SITE.

THIS STRUCTURE HAS BEEN DESIGNED IN ACCORDANCE WITH HEC 18, "EVALUATING SCOUR AT BRIDGES", MAY 2001.

THIS BRIDGE HAS BEEN DESIGNED IN ACCORDANCE WITH THE REQUIREMENTS OF THE STANDARD SPECIFICATIONS FOR SEISMIC DESIGN OF HIGHWAY BRIDGES FOR SEISMIC CATEGORY A.

GALVANIZED STEEL PILES AT END BENTS NO. 1 AND 2 AND BENTS NO. 1 AND 2 ARE REQUIRED IN ACCORDANCE WITH SECTION 450 AND SECTION 1076 OF THE STANDARD SPECIFICATIONS.

PILES FOR END BENTS No. 1 AND 2 SHALL BE DRIVEN TO A MINIMUM BEARING CAPACITY OF 45 TONS EACH.

WHEN DRIVING PILES, THE MAXIMUM BLOW COUNT SHALL NOT BE EXCEEDED.

PILES FOR BENT No. 1 AND 2 SHALL BE DRIVEN TO A TIP ELEVATION NO HIGHER THAN 60 FT. AND SATISFY THE BEARING CAPACITY OF 60 TONS EACH.

THE SCOUR CRITICAL ELEVATIONS FOR BENT No. 1 AND 2 IS 71 FT. THE SCOUR CRITICAL ELEVATIONS ARE FOR USE BY MAINTENANCE FORCES TO MONITOR POSSIBLE SCOUR PROBLEMS DURING THE LIFE OF THE STRUCTURE.

THIS STRUCTURE HAS BEEN DESIGNED IN ACCORDANCE WITH FHWA'S TECHNICAL ADVISORY T5140.20 (SCOUR AT BRIDGES).

ADT = 1800 FOR YEAR 1999

FOR FALSEWORK AND FORMWORK, SEE SPECIAL PROVISIONS.

FOR CRANE SAFETY, SEE SPECIAL PROVISIONS.

ROADWAY APPROACH EMBANKMENT SHALL BE WIDENED AS NECESSARY FOR GUARDRAIL INSTALLATION.

THE QUANTITY OF RIP RAP TO BE PAID FOR WILL BE THE ACTUAL NUMBER OF TONS OF EACH CLASS OF RIP RAP WHICH HAS BEEN INCORPORATED INTO THE COMPLETED AND ACCEPTED WORK. THE RIP RAP WILL BE MEASURED BY BEING WEIGHED IN TRUCKS ON CERTIFIED PLATFORM SCALES OR OTHER CERTIFIED WEIGHING DEVICES. THE QUANTITY OF RIP RAP WILL BE PAID FOR AT THE CONTRACT UNIT PRICE PER TON:

PLAIN RIP RAP CLASS II (2'-0" THICK)

END BENT No. 1	85 TONS
END BENT No. 2	130 TONS
TOTAL	215 TONS

PROJECT NO. 42561

CUMBERLAND COUNTY

STATION: 15+95.04 -L-

REPLACES BRIDGE NO. 11

STATE OF NORTH CAROLINA
DEPARTMENT OF TRANSPORTATION
RALEIGH

BRIDGE ON SR 2008 OVER LOCKS CREEK BETWEEN NC 53/210 & SR 2000

35'-10" CLEAR ROADWAY - 90°SKEW

NORTH CAROLINA PROFESSIONAL ENGINEER SEAL 19661 L. KEVIN AUSTIN 10/7/10

PLANS PREPARED BY:
MULKEY ENGINEERS & CONSULTANTS
PO Box 33127 RALEIGH, N.C. 27636
(919) 851-1815 (919) 851-1940
WWW.MULKEYINC.COM

REVISIONS						SHEET NO.
NO.	BY:	DATE:	NO.	BY:	DATE:	1
1			3			TOTAL SHEETS
2			4			30

DRAWN BY : W. B. ALLEN DATE : 5/09
CHECKED BY : L. K. AUSTIN DATE : 6/09

10/8/2010 10:35:29 AM R:\Structures\BK5110_SD_00_0104

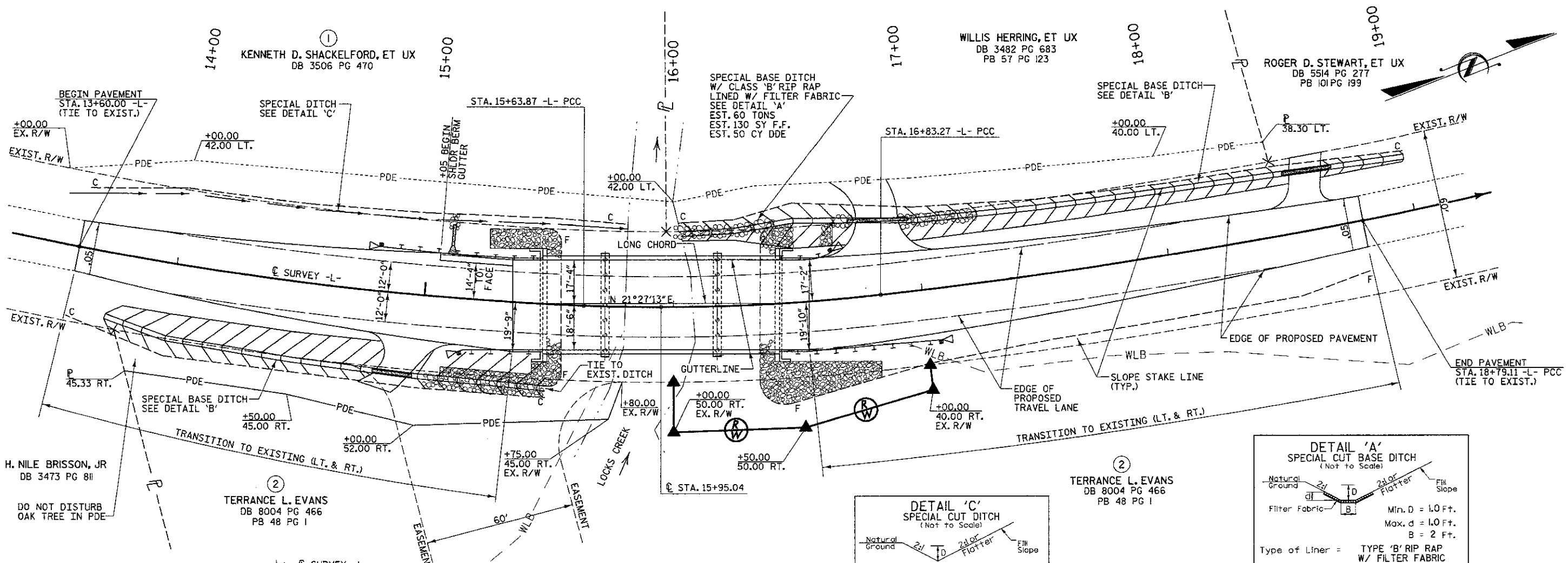

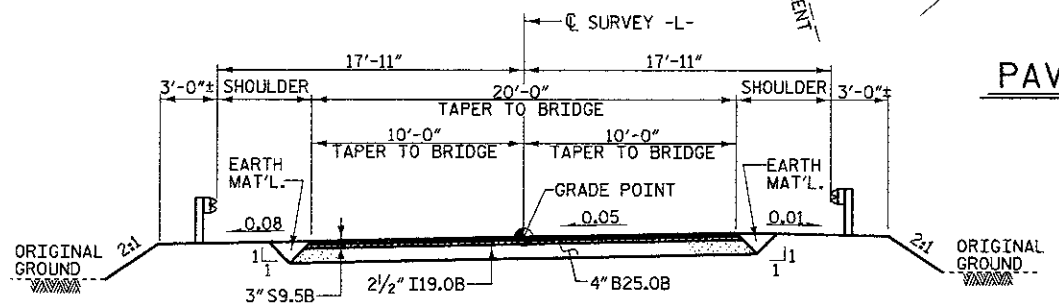

FULL DEPTH PAVEMENT

FROM -L- STA. 15+30 TO BEGIN BRIDGE
FROM END BRIDGE TO -L- STA. 16+0

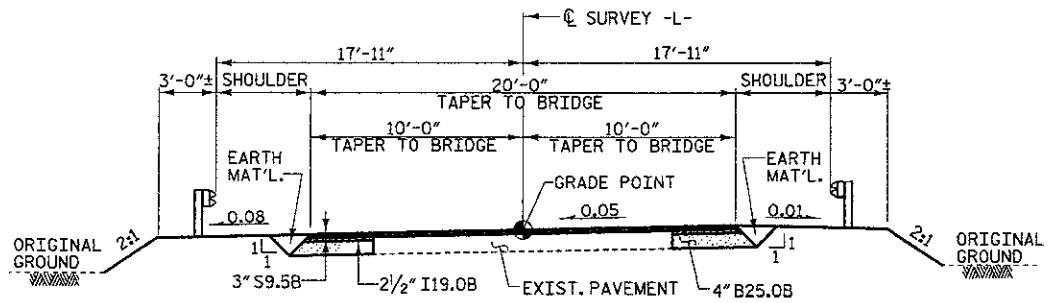

WIDENING PAVEMENT

FROM -L- STA. 13+60 TO -L- STA. 15+30
FROM -L- STA. 16+60 TO -L- STA. 18+79.11

TYPICAL ROADWAY SECTION

WITHIN CONSTRUCTION LIMITS

PAVEMENT LAYOUT DETAIL

SCALE: 1" = 20'

DETAIL 'C'
SPECIAL CUT DITCH
(Not to Scale)

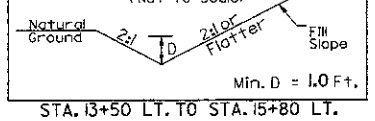

STA. 13+50 LT. TO STA. 15+80 LT.

DETAIL 'A'
SPECIAL CUT BASE DITCH
(Not to Scale)

Type of Liner = TYPE 'B' RIP RAP W/ FILTER FABRIC

STA. 16+00 LT. TO STA. 17+25 LT.
STA. 15+00 RT. TO STA. 15+55 RT.

DETAIL 'B'
SPECIAL CUT BASE DITCH
(Not to Scale)

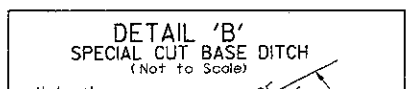

STA. 13+75 RT. TO STA. 15+00 RT.
STA. 17+25 LT. TO STA. 19+00 LT.

RIGHT OF WAY AREA DATA

PARCEL NO.	PROPERTY OWNERS NAMES	TOTAL AREA	AREA TAKEN	AREA REMAINING RT.	AREA REMAINING LT.	CONST. EASE.	PERM. DRAIN. EASE.	TEMP. DRAIN. EASE.
1	KENNETH D. SHACKELFORD, ET UX							
2	TERRANCE L. EVANS	25.67 AC	0.041 AC	25.629 AC			0.078 AC	

DATUM DESCRIPTION

THE LOCALIZED COORDINATE SYSTEM DEVELOPED FOR THIS PROJECT IS BASED ON THE STATE PLANE COORDINATES ESTABLISHED BY OTHERS FOR MONUMENT "MA6012B-1" WITH NAD 1983/95 STATE PLANE GRID COORDINATES OF NORTHING: 463558.138(ft) EASTING: 2058360.218(ft) THE AVERAGE COMBINED GRID FACTOR USED ON THIS PROJECT (GROUND TO GRID) IS: 0.99988095 THE N.C. LAMBERT GRID BEARING AND LOCALIZED HORIZONTAL GROUND DISTANCE FROM "MA6012B-1" TO -L- STATION 15+63.87 IS S 3°30'49" W 769.11' ALL LINEAR DIMENSIONS ARE LOCALIZED HORIZONTAL DISTANCES VERTICAL DATUM USED IS NAVD 88

CURVE DATA -L-

PI STA. 13+20.78	PI STA. 16+23.68
Δ = 20°30'41" (LT)	Δ = 8°31'30" (LT)
Dc = 4°10'23"	Dc = 7°08'24"
L = 491.51'	L = 119.40
T = 248.41'	T = 59.81'
R = 1,372.96	R = 802.46
	BACK = N 23°43'32" E
	AHEAD = N 15°12'02" E
PI STA. 17+81.24	PI STA. 20+10.83
Δ = 4°42'42" (LT)	Δ = 14°59'17" (LT)
Dc = 2°24'22"	Dc = 5°43'19"
L = 195.84'	L = 261.94'
T = 97.97'	T = 131.72'
R = 2,381.40	R = 1,001.34

PROJECT NO. 42561
CUMBERLAND COUNTY
STATION: 15+95.04 -L-

REPLACES BRIDGE NO. 11

STATE OF NORTH CAROLINA
DEPARTMENT OF TRANSPORTATION
RALEIGH

ROADWAY DETAILS

35'-10" CLEAR ROADWAY - 90°SKEW

NORTH CAROLINA PROFESSIONAL ENGINEER SEAL 19661 L. KEVIN AUSTIN 10/7/10

PLANS PREPARED BY:
MULKEY
ENGINEERS & CONSULTANTS
PO Box 33187
Raleigh, N.C. 27636
(919) 851-1515
(919) 851-1918 (FAX)
WWW.MULKEYINC.COM

REVISIONS						SHEET NO.
NO.	BY:	DATE:	NO.	BY:	DATE:	2
1			3			TOTAL SHEETS
2			4			30

DRAWN BY : W. B. ALLEN DATE : 5/09
CHECKED BY : L. K. AUSTIN DATE : 6/09

10/8/2010 10:35:57 AM N:\Structures\BRS80_50_60_02.dgn

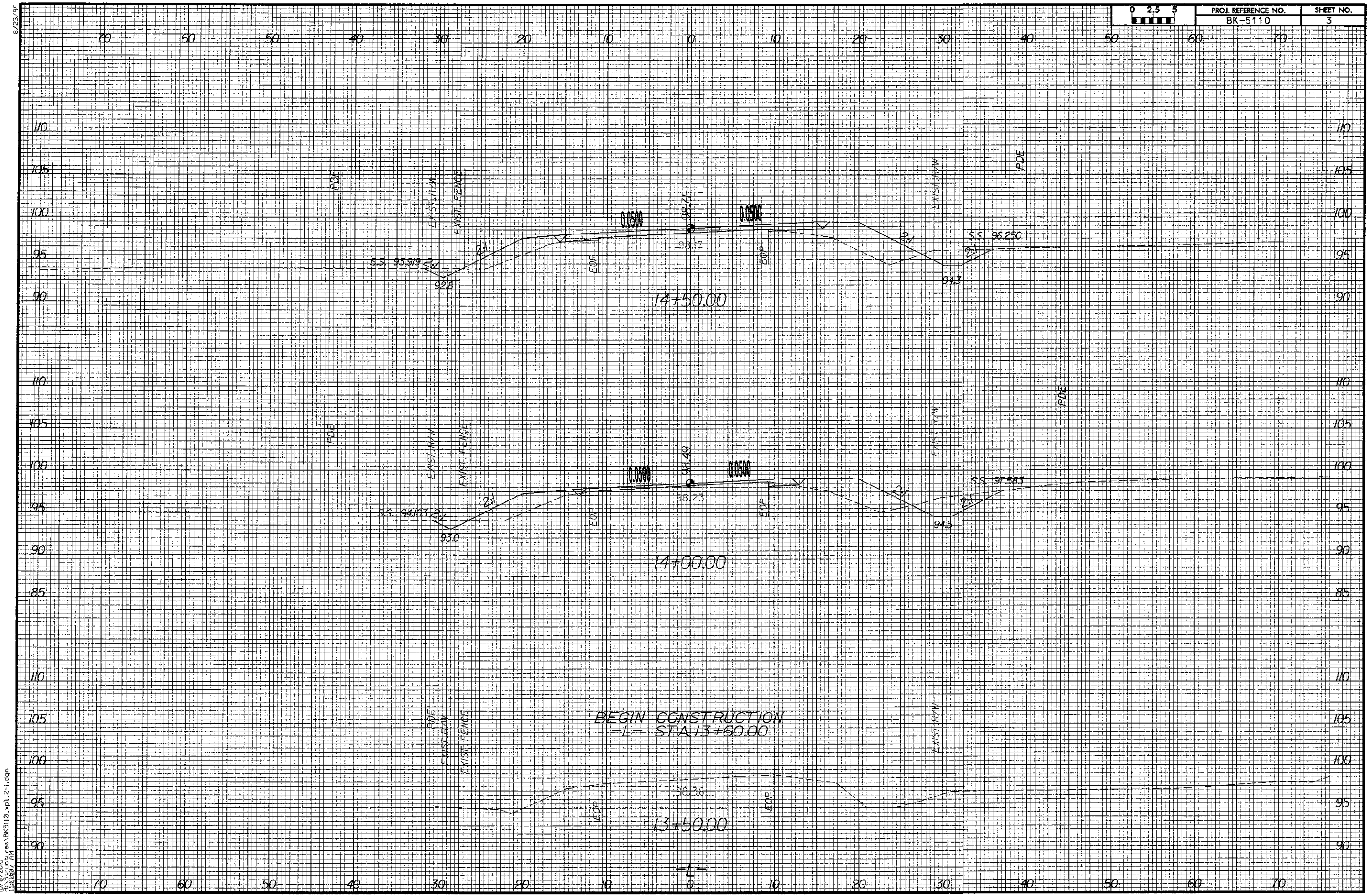

0 2.5 5
PROJ. REFERENCE NO.
BK-5110
SHEET NO.
3
8/23/99
PDE
EXIST. R/W
EXIST. FENCE
0.0500
98.71
98.7
S.S. 93.919
92.8
2:1
EOP
S.S. 96.250
94.3
14+50.00
98.49
98.23
S.S. 94.163
93.0
S.S. 97.583
94.5
14+00.00
BEGIN CONSTRUCTION
-L- STA. 13+60.00
98.36
13+50.00
-L-
10/8/2010
R:\Structures\BK5110_xpl_2-1.dgn
11:00:07 AM

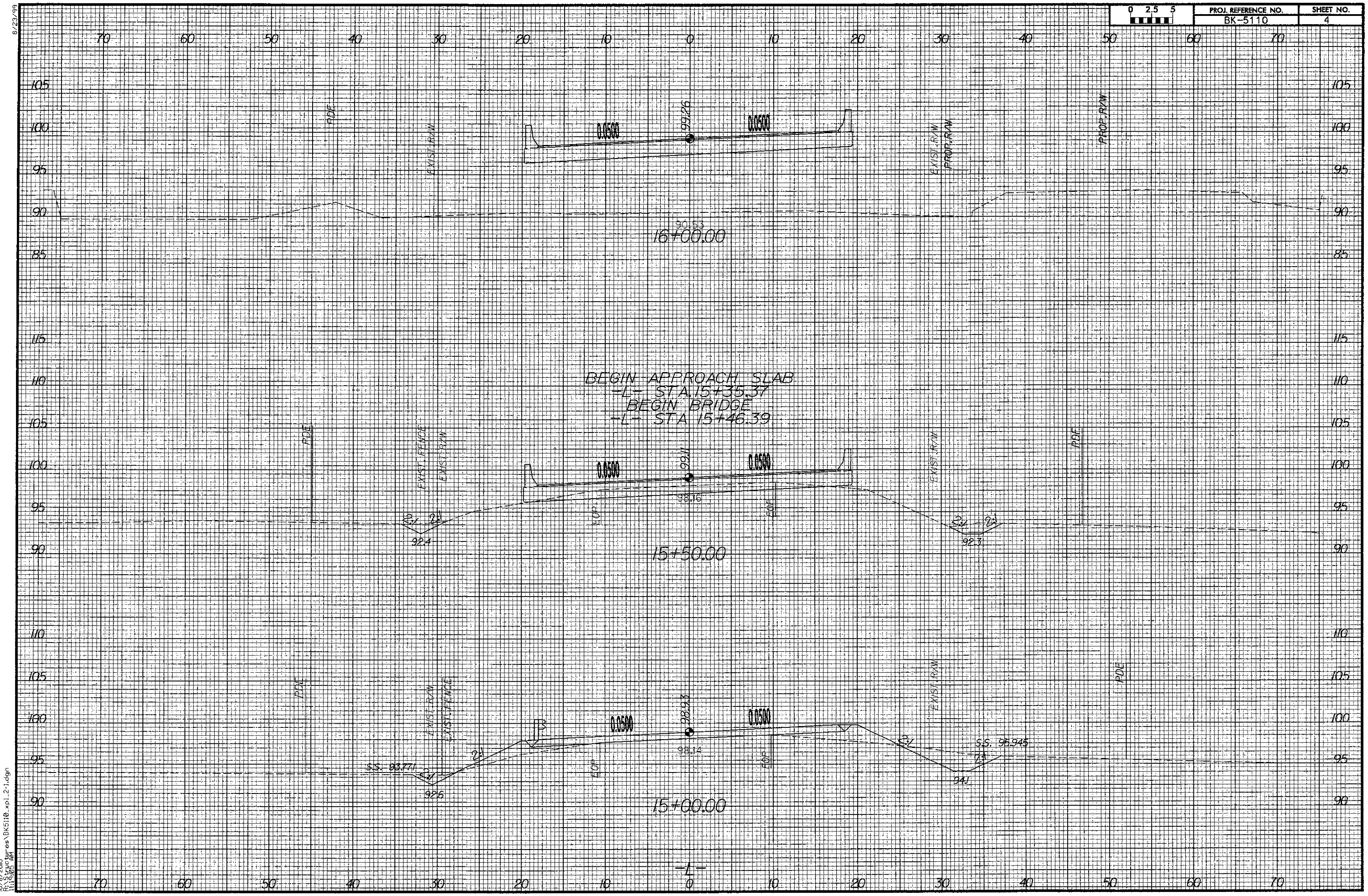

8/23/99

10/8/2010
R:\Structures\BK5110_xpl_2-1.dgn
11:19:05 AM

8/23/99

0 2.5 5	PROJ. REFERENCE NO.	SHEET NO.
	BK-5110	5

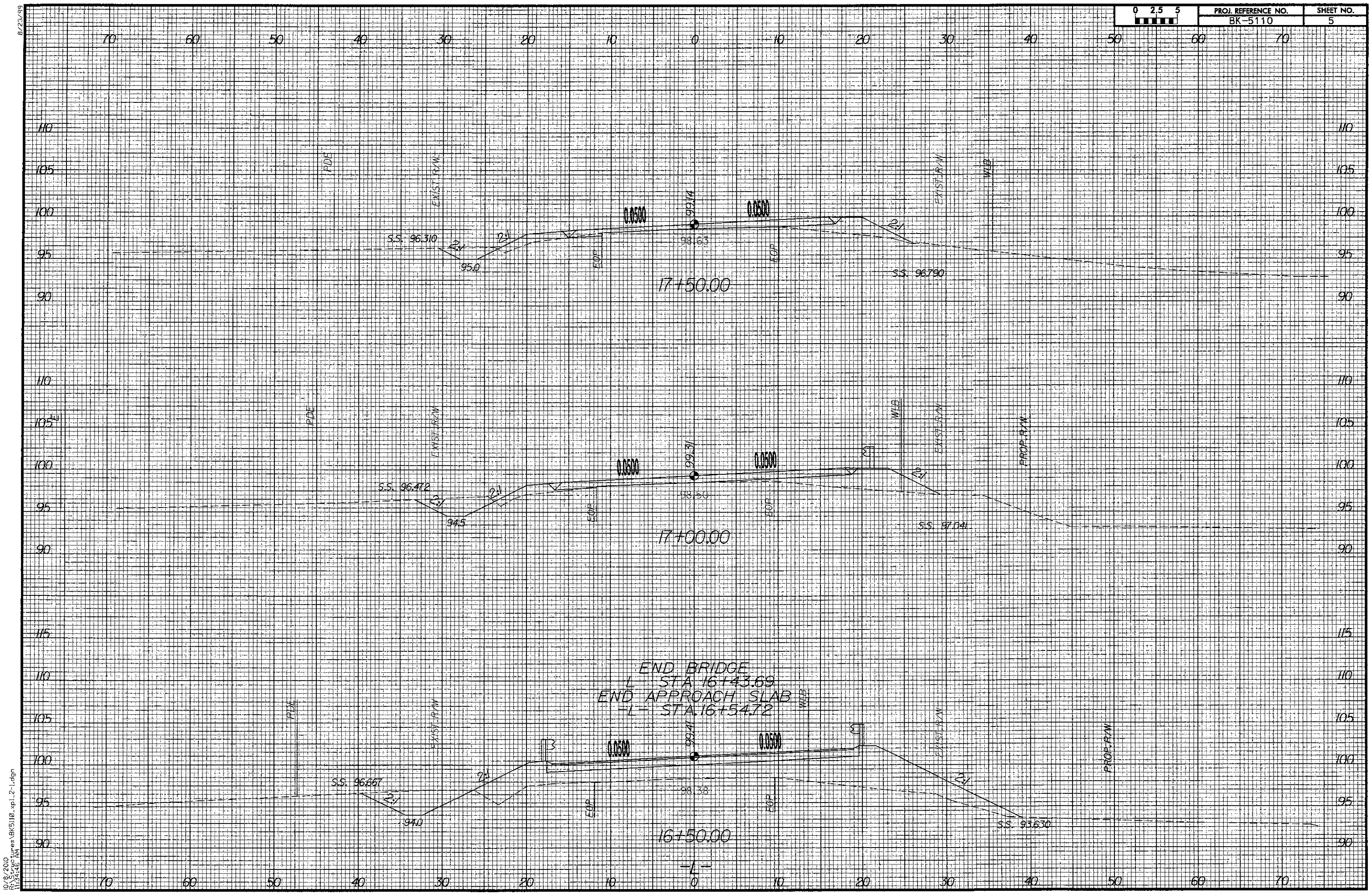

10/8/2020
R:\S_structures\BK5110_vp1_2-1.dgn
11:34:46 AM

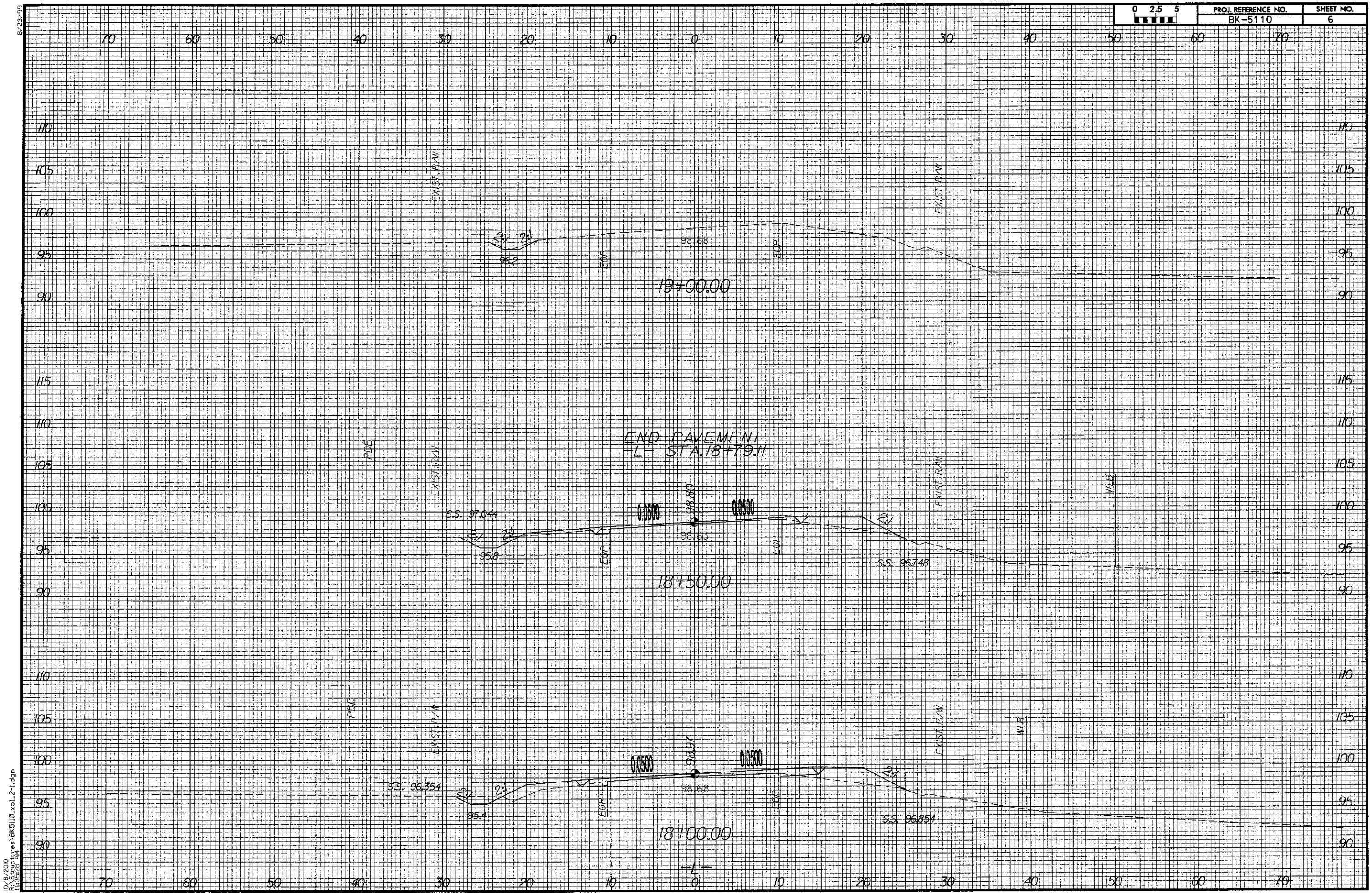

8/23/99

10/8/2010
R:\Structures\BK5110_xpl_2-1.dgn
11:35:28 AM

FIXED END

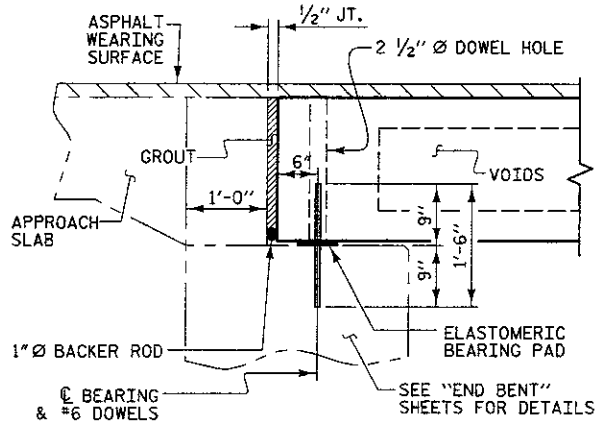

SECTION AT END BENT

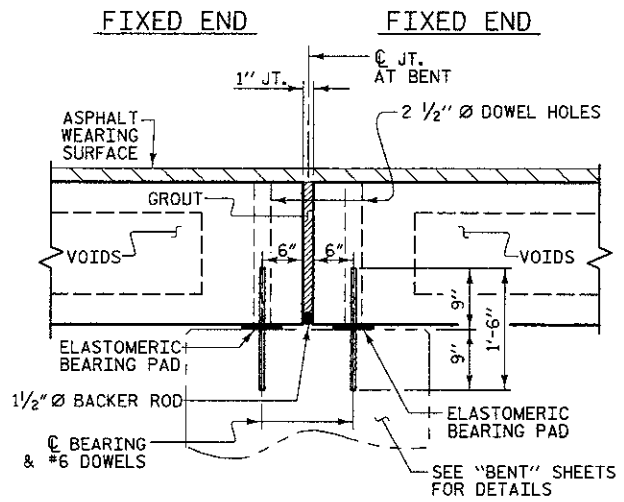

SECTION AT BENT

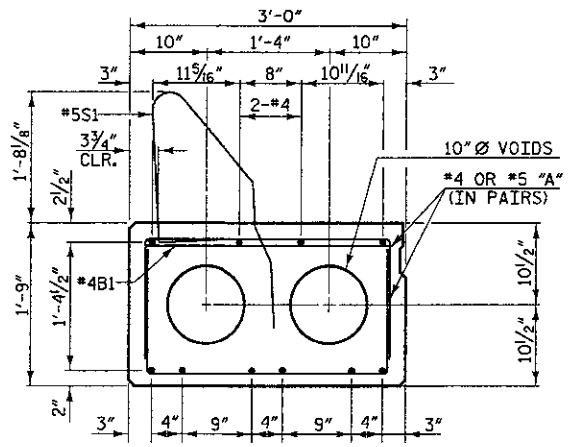

25' SPAN

8 - 0.6" Ø L.R. STRANDS
EXTERIOR SLAB SECTIONS

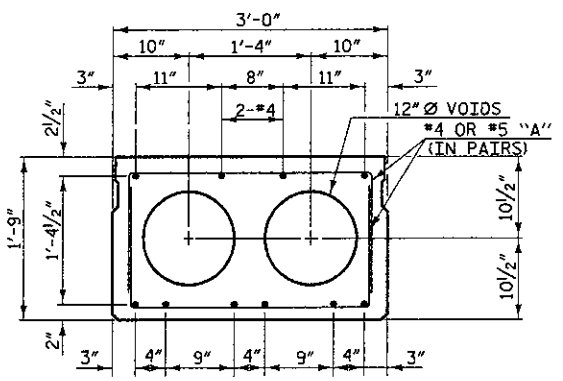

25' SPAN

8- 0.6" Ø L.R. STRANDS
INTERIOR SLAB SECTIONS

NOTE:
FOR LOCATION OF #5S1
SEE "TIE LOCATION FOR #5S1" DETAIL ON "PRESTRESSED CORED SLAB, 25' SPAN" SHEET.

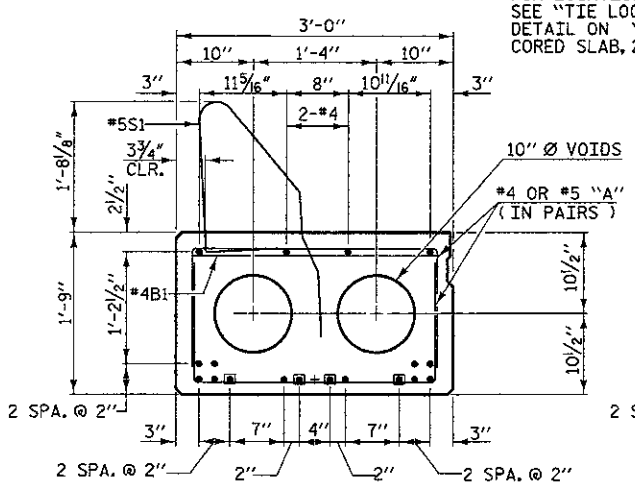

45' SPAN

16 - 0.6" Ø L.R. STRANDS
EXTERIOR SLAB SECTIONS

■ DENOTES SHEATHED STRAND
(SEE SHEATH CHART)

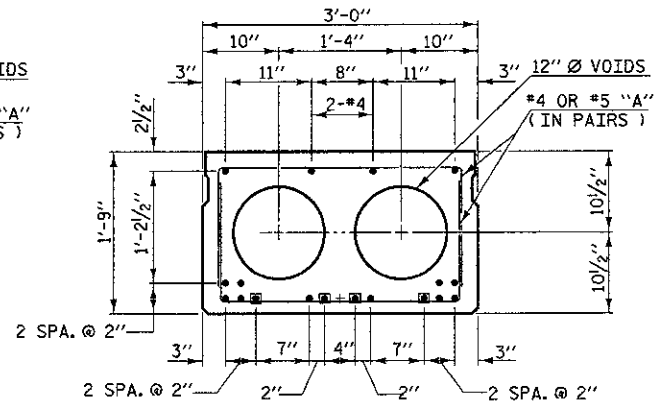

45' SPAN

16 - 0.6" Ø L.R. STRANDS
INTERIOR SLAB SECTIONS

SHEATH CHART		
SPAN LENGTH	NUMBER OF SHEATHED STRANDS PER EXTERIOR SLAB SECTIONS	NUMBER OF SHEATHED STRANDS PER INTERIOR SLAB SECTIONS
25'	0	0
45'	4	4

BOND SHALL BE BROKEN ON THESE STRANDS FOR A DISTANCE OF 4'-0" FROM END OF SLAB

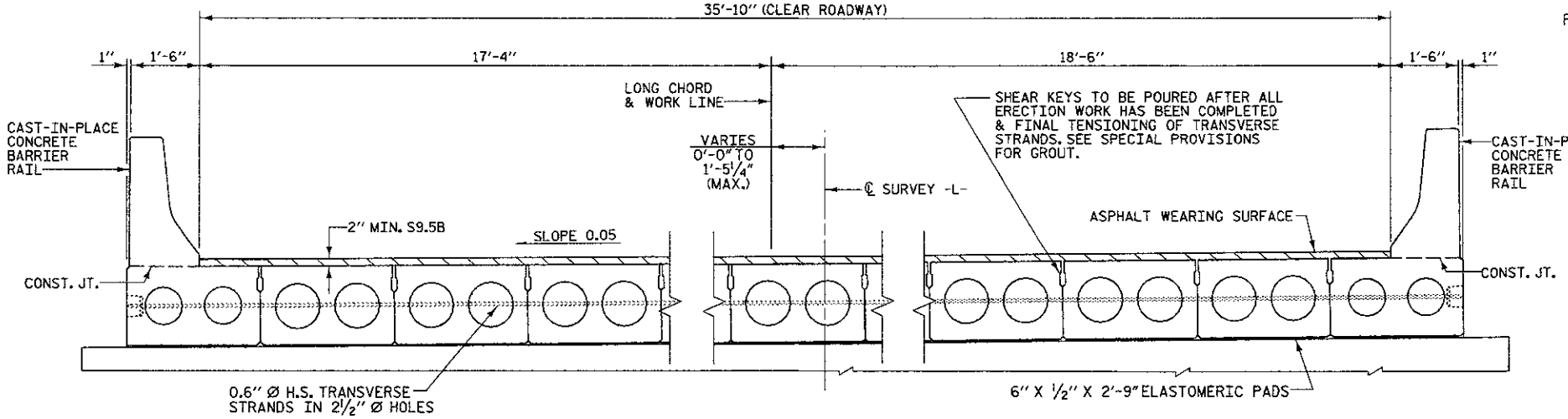

TYPICAL SECTION

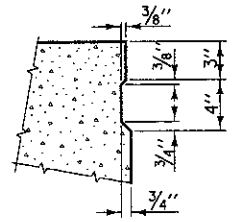

SHEAR KEY DETAIL

NOTE: OMIT SHEAR KEY ON OUTSIDE OF EXTERIOR CORED SLAB

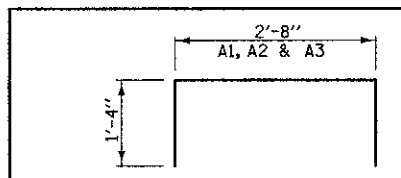

REINFORCING BAR TYPES

BAR DIMENSIONS ARE OUT TO OUT

GENERAL NOTES

CONCRETE = f'c - 5000psi 25' SPAN ONLY. (MIN. COMP. STRENGTH @ 28 DAYS).
f'ci - 4000psi 25' SPAN ONLY (MIN. COMP. STRENGTH @ TRANSFER OF STRESSING FORCE).

CONCRETE = f'c - 6000psi 45' SPAN ONLY. (MIN. COMP. STRENGTH @ 28 DAYS).
f'ci - 4500psi 45' SPAN ONLY (MIN. COMP. STRENGTH @ TRANSFER OF STRESSING FORCE).

SIZE	TYPE	AREA	ULTIMATE STR.	APPLIED FORCE
0.6" Ø	LOW RELAX.	0.217 SQ. IN. PER CABLE	58,600 LBS.	43,950 LBS. PER CABLE

STRUCTURAL STEEL ITEMS SHALL BE OF A GRADE CONFORMING TO EITHER ASTM A36 OR A373, EXCEPT HIGH STRENGTH BOLTS. HIGH STRENGTH BOLTS SHALL BE ASTM A325. ALL STRUCTURAL STEEL SHALL BE GALVANIZED AS PER THE SPECIFICATION.

ALL MATERIAL AND WORKMANSHIP SHALL COMPLY WITH THE APPLICABLE REQUIREMEMNTS OF THE STANDARD SPECIFICATIONS FOR ROADS AND STRUCTURES OF THE NC DEPARTMENT OF TRANSPORTATION DATED JULY 2006 AND WITH THE SPECIAL PROVISIONS.

ALL PRESTRESSING STRANDS SHALL BE 7-WIRE LOW RELAXATION GRADE 270 STRANDS AND SHALL CONFORM TO AASHTO M203 EXCEPT FOR SAMPLING REQUIREMENTS WHICH SHALL BE IN ACCORDANCE WITH THE STANDARD SPECIFICATIONS.

ALL REINFORCING STEEL CAST WITH THE CORED SLAB SECTIONS SHALL BE GRADE 60 AND SHALL BE INCLUDED IN THE UNIT PRICE BID FOR CONSTRUCTION OF SUPERSTRUCTURE.

RECESSES FOR TRANSVERSE STRANDS SHALL BE GROUTED AFTER THE TENSIONING OF THE STRANDS.

THE BACKER ROD SHALL CONFORM TO THE REQUIREMENTS OF TYPE M BOND BREAKER . SEE SECTION 1028 OF THE STANDARD SPECIFICATIONS. THE JOINT SHALL BE FILLED WITH GROUT.

WHEN CORED SLABS ARE CAST, A POSITIVE HOLD-DOWN SYSTEM SHALL BE EMPLOYED TO PREVENT VOIDS FROM RISING OR MOVING SIDEWAYS. THIS SYSTEM SHALL BE DESIGNED TO BE LEFT IN PLACE UNTIL THE CONCRETE HAS REACHED RELEASE STRENGTH. AT LEAST THREE WEEKS PRIOR TO CASTING CORED SLABS, THE CONTRACTOR SHALL SUBMIT TO THE ENGINEER FOR REVIEW AND COMMENT, DETAILED DRAWINGS OF THE PROPOSED HOLD-DOWN SYSTEM. IN ADDITION TO STRUCTURAL DETAILS, LOCATION AND SPACING OF THE HOLD-DOWNS SHALL BE INDICATED.

ALL REINFORCING STEEL IN BARRIER RAILS SHALL BE EPOXY COATED.

PRESTRESSING STRANDS SHALL BE CUT FLUSH WITH THE CORED SLAB UNIT ENDS.

APPLY EPOXY PROTECTIVE COATING TO CORED SLAB UNIT ENDS.

UNLESS OTHERWISE NOTED ON THE PLANS, ALL EXPOSED CORNERS ON STRUCTURES SHALL BE CHAMFERED ¾".

FOR GROUT FOR STRUCTURES, SEE SPECIAL PROVISIONS.

FOR PRESTRESSED CONCRETE MEMBERS, SEE SPECIAL PROVISIONS.

FOR DEFLECTION TABLE, SEE "PRESTRESSED CORED SLAB, 45' SPAN" SHEET.

NO DECK DRAINS ALLOWED.

PROJECT NO. 42561
CUMBERLAND COUNTY
STATION: 15+95.04 -L-

REPLACES BRIDGE NO. 11

STATE OF NORTH CAROLINA
DEPARTMENT OF TRANSPORTATION
RALEIGH
STANDARD

PRESTRESSED CORED SLAB 25' & 45' SPANS

35'-10" CLEAR ROADWAY - 90°SKEW

NORTH CAROLINA PROFESSIONAL ENGINEER SEAL 19661 L. KEVIN AUSTIN 10/7/10

PLANS PREPARED BY:
MULKEY
ENGINEERS & CONSULTANTS
P.O. Box 33157
RALEIGH, N.D. 27636
(919) 851-1815
(919) 851-1815 (FAX)
WWW.MULKEYINC.COM

REVISIONS						SHEET NO.
NO.	BY:	DATE:	NO.	BY:	DATE:	7
1			3			TOTAL SHEETS
2			4			30

DRAWN BY : W. B. ALLEN DATE : 5/09
CHECKED BY : L. K. AUSTIN DATE : 6/09

10/7/2010 6:44:28 AM R:\Structures\BS60_50_TS.dgn

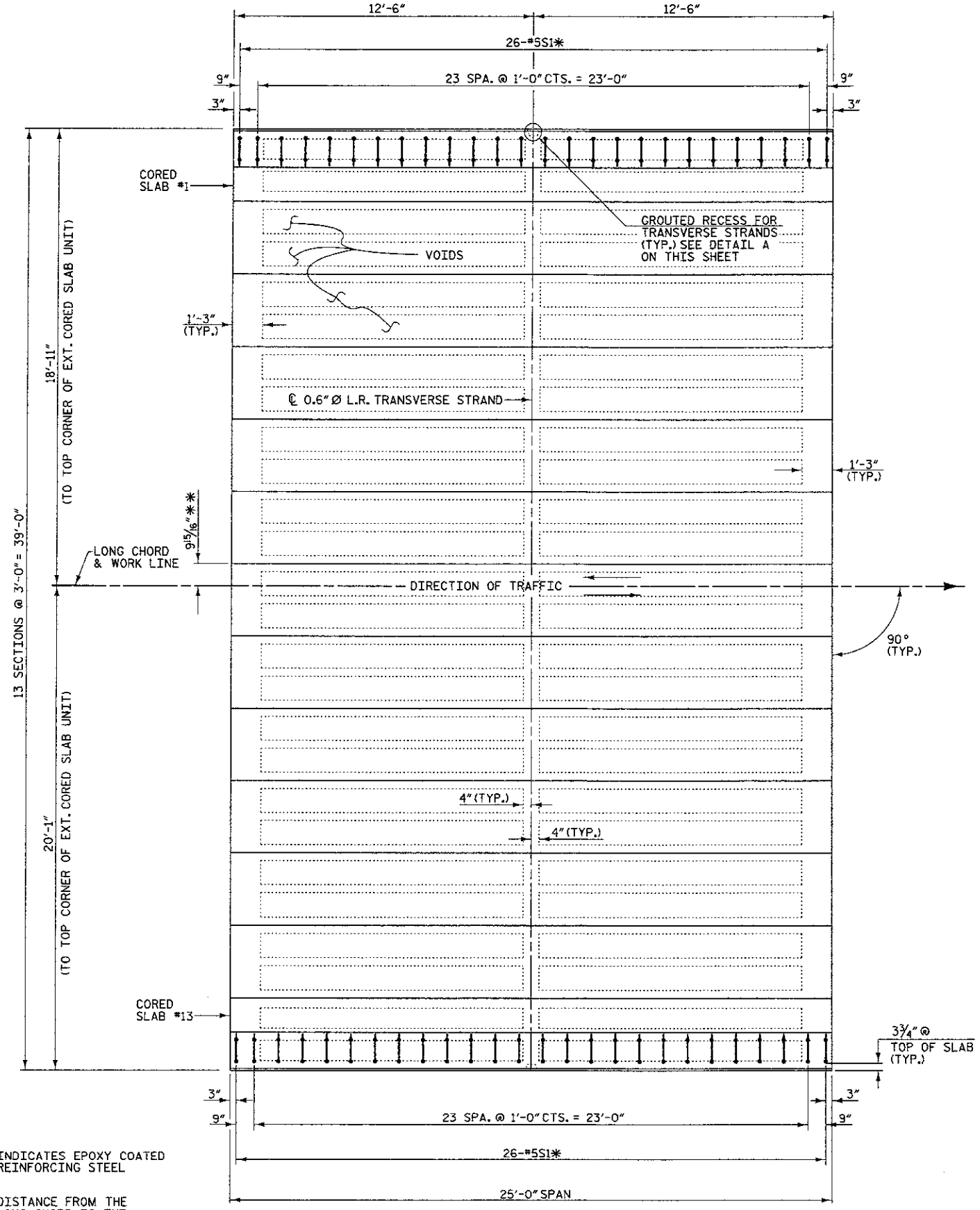

* INDICATES EPOXY COATED REINFORCING STEEL

** DISTANCE FROM THE LONG CHORD TO THE BOTTOM EDGE OF CORED SLAB #6 & #7

PLAN OF SPAN

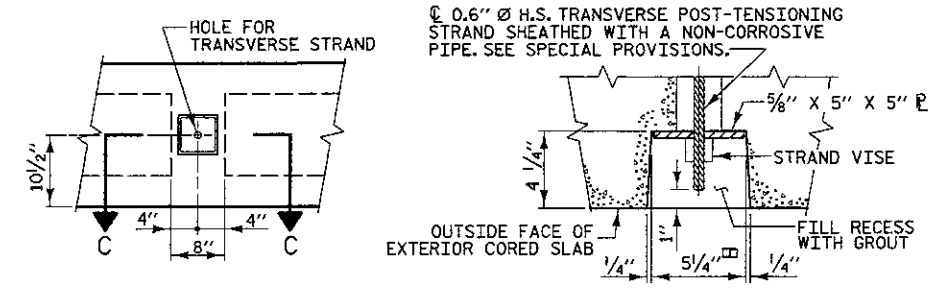

ELEVATION

SECTION C-C

DETAIL A
GROUTED RECESS AT END OF POST-TENSIONED STRAND CORED SLAB

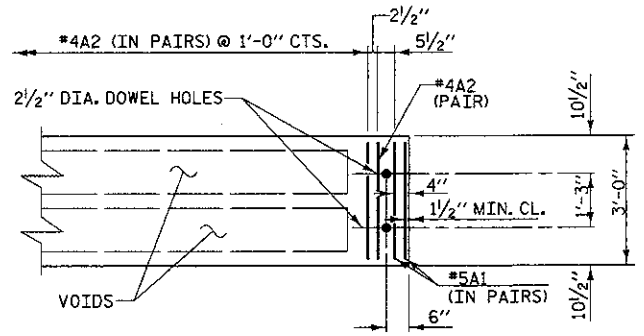

PART PLAN - 25' SLAB SECTION

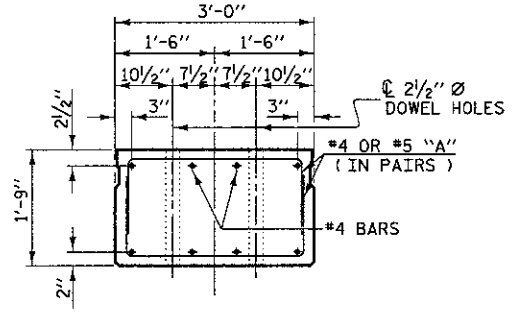

SLAB END ELEVATION

THE 2½" Ø DOWEL HOLES AT FIXED ENDS OF SLAB SECTIONS SHALL BE FILLED WITH GROUT, SEE SPECIAL PROVISIONS.

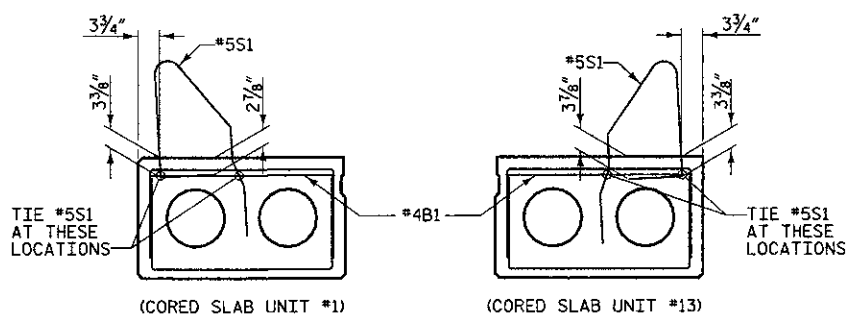

(CORED SLAB UNIT #1)

(CORED SLAB UNIT #13)

TIE LOCATION FOR #5S1

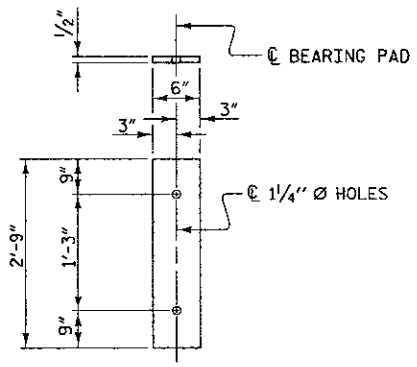

FIXED
(TYPE I - 78 REQ'D)

ELASTOMERIC BEARING DETAILS

NOTE: ELASTOMER HARDNESS SHALL BE 50 DUROMETERS.

PROJECT NO. 42561

CUMBERLAND COUNTY

STATION: 15+95.04 -L-

REPLACES BRIDGE NO. 11

STATE OF NORTH CAROLINA
DEPARTMENT OF TRANSPORTATION
RALEIGH

STANDARD

PRESTRESSED CORED SLAB
25' SPAN

35'-10" CLEAR ROADWAY - 90° SKEW

NORTH CAROLINA PROFESSIONAL ENGINEER 19661 L. KEVIN AUSTIN 10/7/10

PLANS PREPARED BY:
MULKEY ENGINEERS & CONSULTANTS
PO Box 33127
Raleigh, N.C. 27636
(919) 851-1912
(919) 851-1918 (FAX)
WWW.MULKEYINC.COM

REVISIONS						SHEET NO.
NO.	BY:	DATE:	NO.	BY:	DATE:	8
1			3			TOTAL SHEETS
2			4			30

DRAWN BY : W. B. ALLEN DATE : 5/09
CHECKED BY : L. K. AUSTIN DATE : 6/09

10/7/2010 6:45:05 AM R:\Structures\BK50_SD_CS_01.dgn

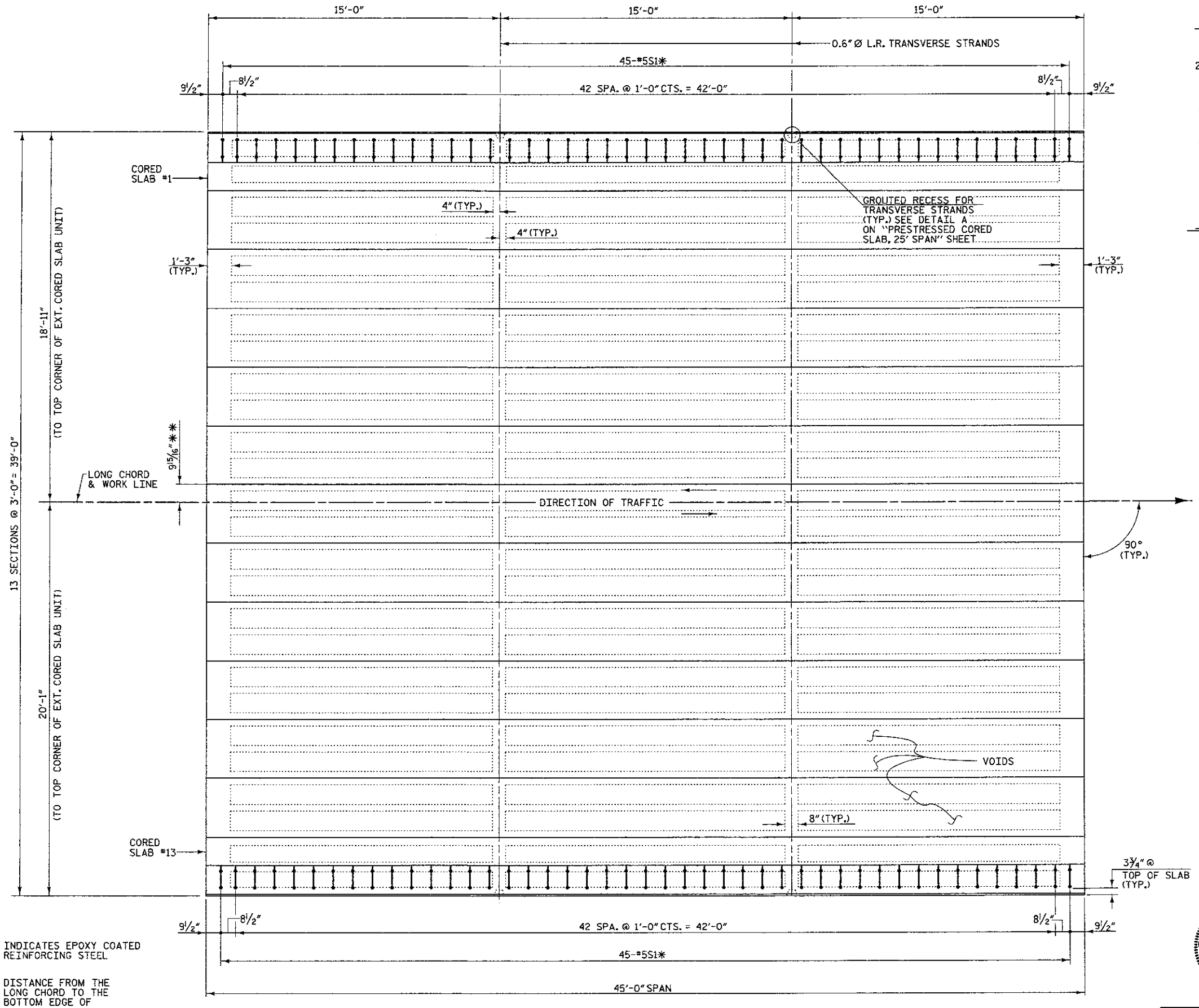

* INDICATES EPOXY COATED REINFORCING STEEL

** DISTANCE FROM THE LONG CHORD TO THE BOTTOM EDGE OF CORED SLAB #6 & #7

PLAN OF SPAN

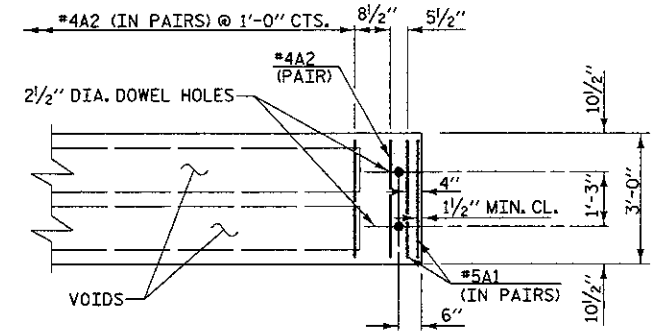

PART PLAN - 45' SLAB SECTION

EXTERIOR SLAB UNIT	25'	45'
CAMBER (SLAB UNIT ALONE IN PLACE)	¼" (UP)	1¾" (UP)
DEFLECTION (SUPERIMPOSED DEAD LOAD)	* 0" (DOWN)	* 3/16" (DOWN)
FINAL DEFLECTION	¼" (UP)	1 9/16" (UP)
* INCLUDES FUTURE WEARING SURFACE		

INTERIOR SLAB UNIT	25'	45'
CAMBER (SLAB UNIT ALONE IN PLACE)	¼" (UP)	1 15/16" (UP)
DEFLECTION (SUPERIMPOSED DEAD LOAD)	* 0" (DOWN)	* 3/16" (DOWN)
FINAL DEFLECTION	¼" (UP)	1¾" (UP)
* INCLUDES FUTURE WEARING SURFACE		

PROJECT NO. 42561

CUMBERLAND COUNTY

STATION: 15+95.04 -L-

REPLACES BRIDGE NO. 11

STATE OF NORTH CAROLINA
DEPARTMENT OF TRANSPORTATION
RALEIGH

STANDARD

PRESTRESSED CORED SLAB
45' SPAN

35'-10" CLEAR ROADWAY - 90° SKEW

NORTH CAROLINA PROFESSIONAL SEAL 19661 ENGINEER L. KEVIN AUSTIN 10/7/10

PLANS PREPARED BY:
MULKEY ENGINEERS & CONSULTANTS
PO Box 33127 Raleigh, N.C. 27636
(919) 851-1912
(919) 851-1918 (FAX)
WWW.MULKEYINC.COM

REVISIONS						SHEET NO.
NO.	BY:	DATE:	NO.	BY:	DATE:	9
1			3			TOTAL SHEETS
2			4			30

DRAWN BY : W. B. ALLEN DATE : 5/09
CHECKED BY : L. K. AUSTIN DATE : 6/09

10/7/2010 11:05:01 AM R:\Structures\BK5\BD_SD_CS_02.dgn

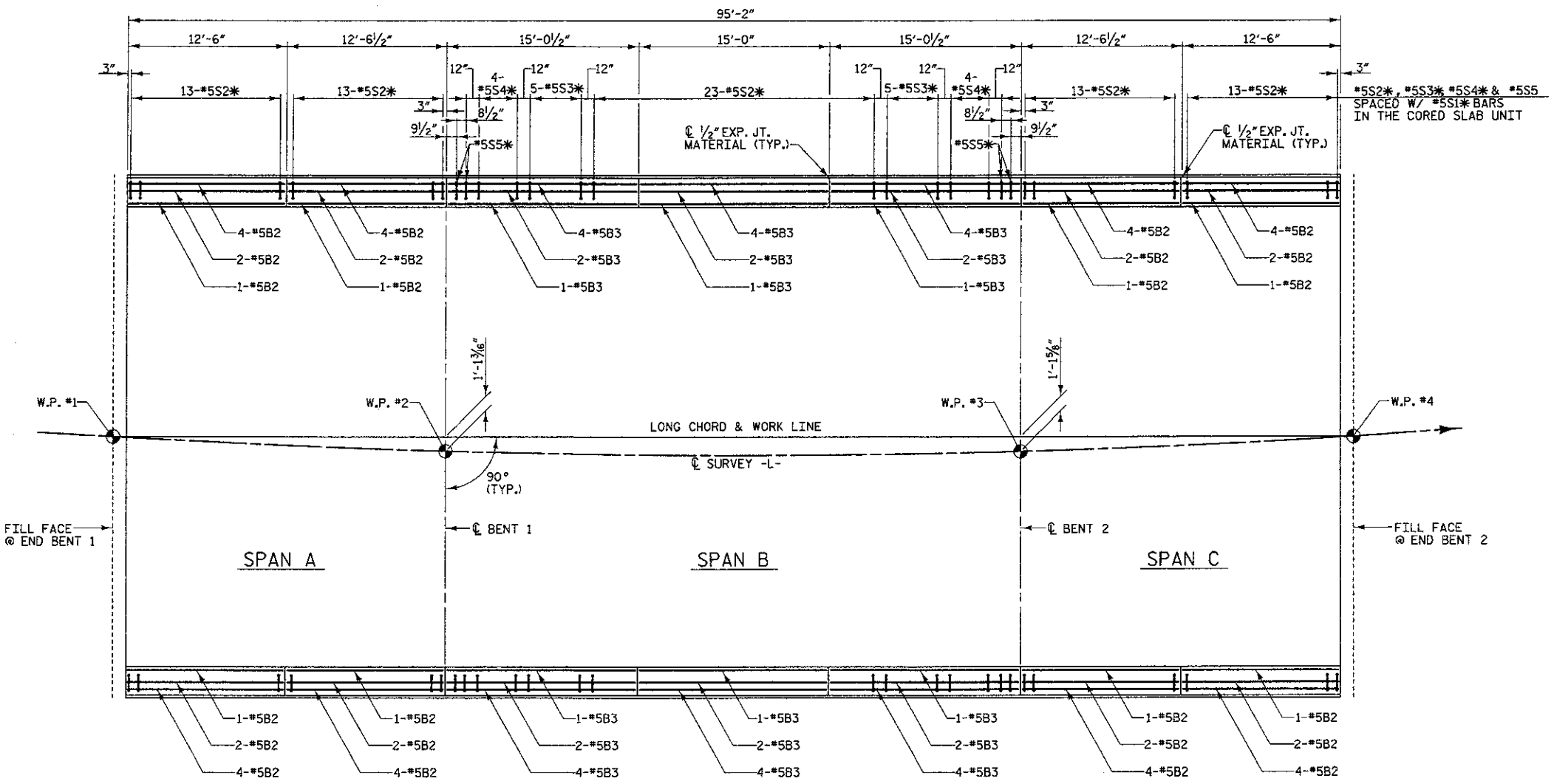

PLAN

* INDICATES EPOXY COATED REINFORCING STEEL.

FOR SPACING AND LOCATION OF THE *5S1 BARS SEE "CORED SLAB SHEETS", NOS. 8 & 9.

*5 "S" BARS MAY BE SHIFTED SLIGHTLY IN ORDER TO MAINTAIN A 2" MINIMUM CLEARANCE TO THE ½" EXPANSION JOINT MATERIAL IN THE BARRIER RAIL AND GROUTED RECESS FOR TRANSVERSE STRANDS IN THE CORED SLABS.

THE HEIGHT OF THE BARRIER RAIL VARIES THE TOP OF THE RAIL IS TO FOLLOW THE PROFILE OF THE GUTTER LINE.

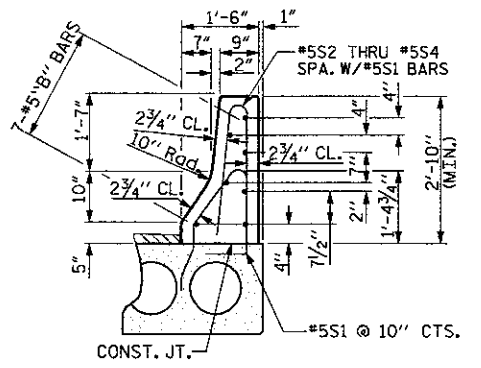

SECTION THRU RAIL @ MID-SPAN

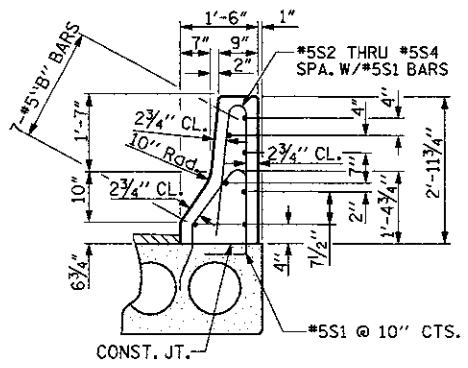

SECTION THRU RAIL @ ℄ BEARING
(SPAN B ONLY)

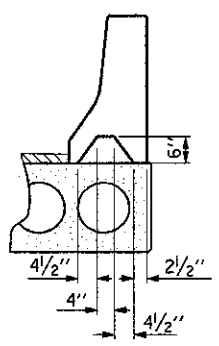

SECTION S-S
AT DAM IN OPEN JOINT
(THIS IS TO BE USED ONLY WHEN SLIP FORM IS USED)

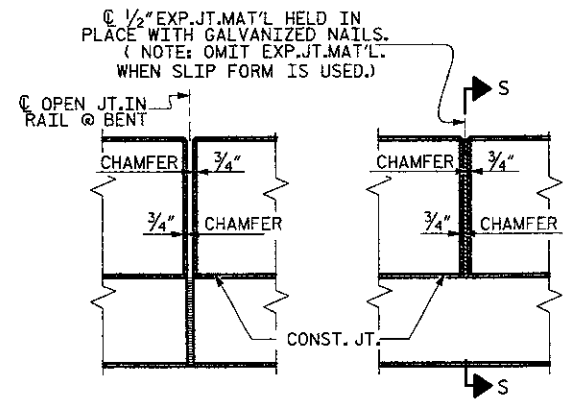

ELEVATION AT EXPANSION JOINTS

BILL OF MATERIAL

BAR	NO.	SIZE	TYPE	LENGTH	WEIGHT
*B2	56	#5	STR	12'-1"	706
*B3	42	#5	STR	14'-7"	639
*S1	194	#5	1	5'-3"	1062
*S2	150	#5	2	5'-2"	808
*S3	20	#5	2	5'-3"	110
*S4	16	#5	2	5'-4"	89
*S5	8	#5	2	5'-5"	45

* EPOXY COATED REINFORCING STEEL LBS. =	3459
CLASS AA CONCRETE CU. YDS. =	21.2

BAR TYPES

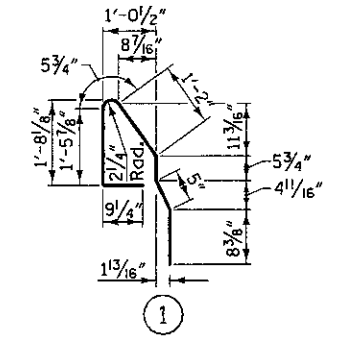

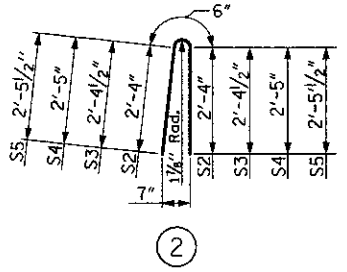

PROJECT NO. 42561

CUMBERLAND COUNTY

STATION: 15+95.04 -L-

REPLACES BRIDGE NO. 11

STATE OF NORTH CAROLINA
DEPARTMENT OF TRANSPORTATION
RALEIGH

CONCRETE BARRIER RAIL

35'-10" CLEAR ROADWAY - 90° SKEW

NORTH CAROLINA PROFESSIONAL SEAL 19661 ENGINEER KEVIN AUSTIN 10/7/10

PLANS PREPARED BY:
MULKEY ENGINEERS & CONSULTANTS
PO Box 33127 Raleigh, N.C. 27636
(919) 851-1212 (FAX) (919) 851-1213
WWW.MULKEYINC.COM

REVISIONS						SHEET NO.
NO.	BY:	DATE:	NO.	BY:	DATE:	10
1			3			TOTAL SHEETS
2			4			30

DRAWN BY : W. B. ALLEN DATE : 5/09
CHECKED BY : L. K. AUSTIN DATE : 5/09

10/7/2010 10:57:26 AM R:\Structures\B3940_SD_BR_D.dgn

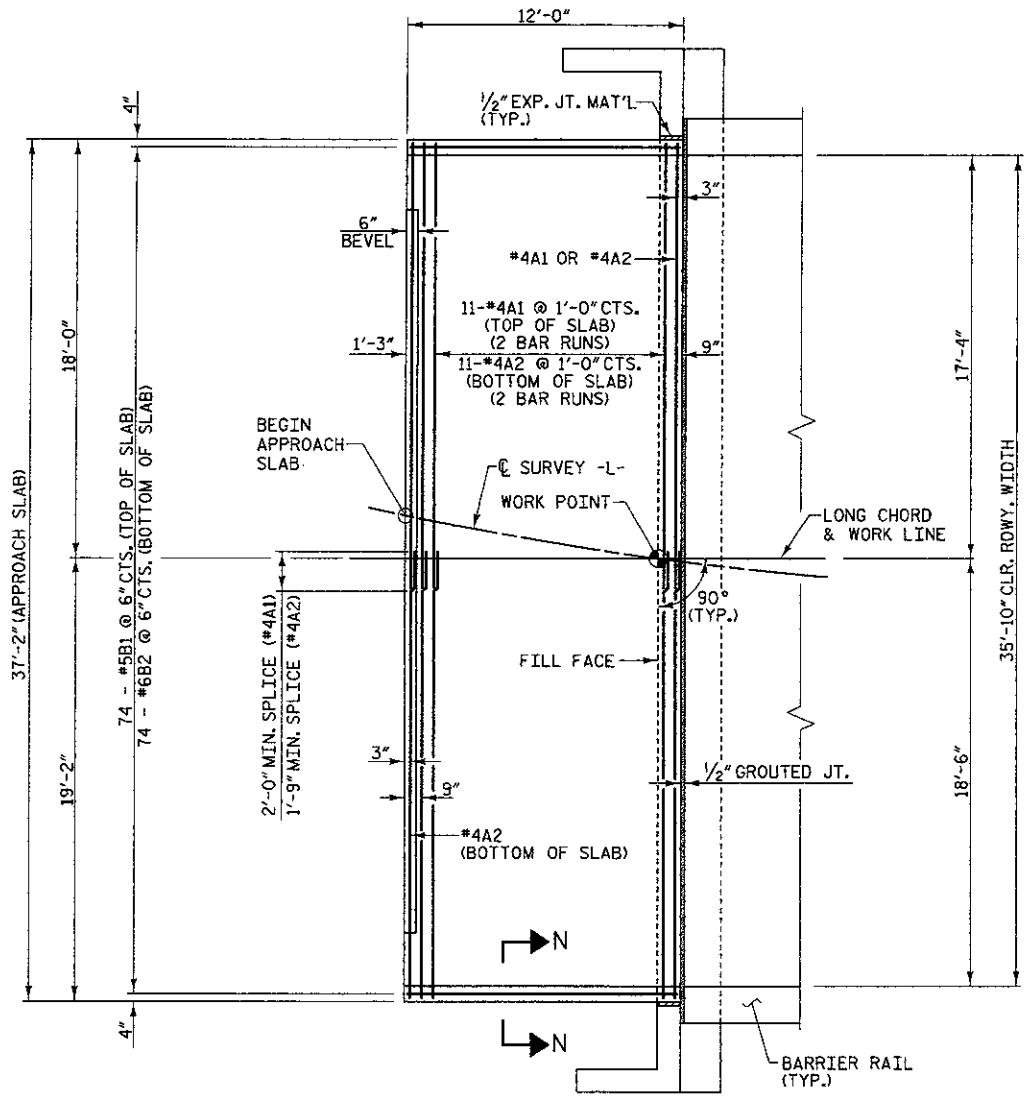

PLAN OF APPROACH SLAB

END BENT 1 APPROACH SLAB SHOWN
END BENT 2 APPROACH SLAB SIMILAR

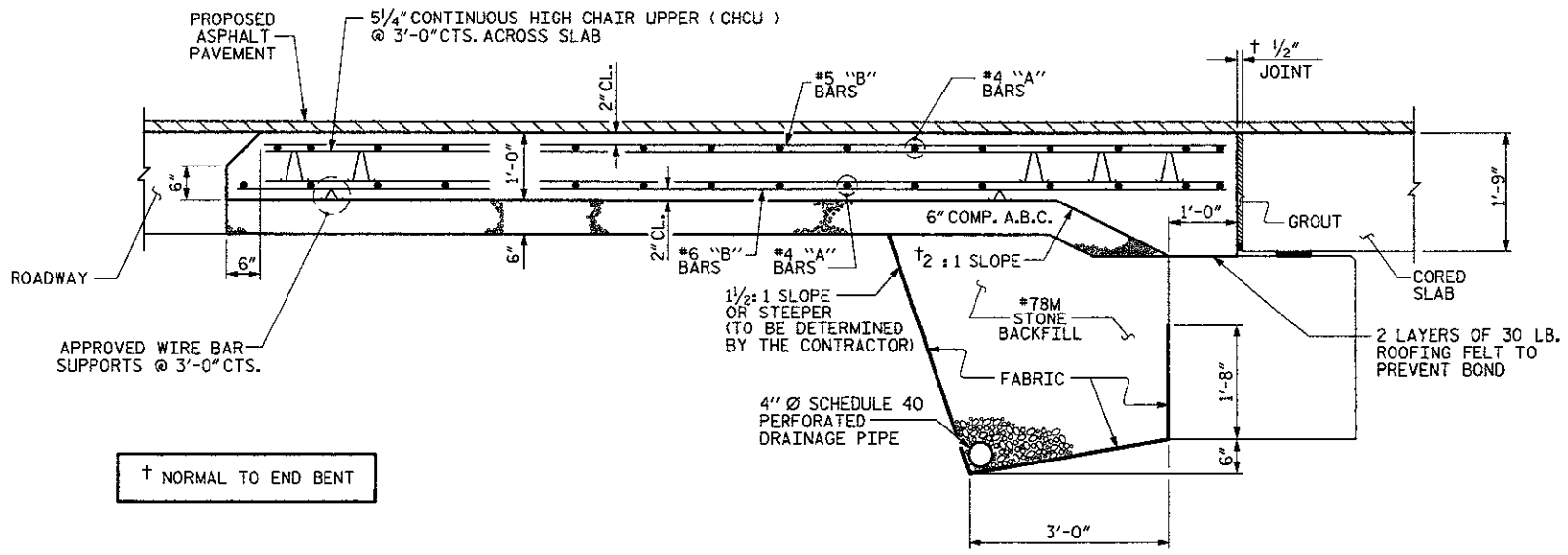

† NORMAL TO END BENT

SECTION THRU SLAB

NOTES

REINFORCED BRIDGE APPROACH FILL INCLUDING FABRIC, IMPERMEABLE GEOMEMBRANE, 4" Ø DRAINAGE PIPE, *78M STONE, AND SELECT MATERIAL, SHALL BE INCLUDED IN THE LUMP SUM CONTRACT BID PRICE FOR BRIDGE APPROACH SLABS.

FABRIC SHALL BE TYPE 1 ENGINEERING FABRIC IN ACCORDANCE WITH THE STANDARD SPECIFICATIONS SECTION 1056.

*78M STONE BACKFILL (CLASS V SELECT MATERIAL) SHALL BE IN ACCORDANCE WITH STANDARD SPECIFICATIONS SECTION 1016.

*78M STONE BACKFILL IS TO BE CONTINUOUS ALONG FILL FACE OF BACKWALL FROM OUTSIDE EDGE TO OUTSIDE EDGE OF APPROACH SLAB.

FOR THE 4" Ø DRAINAGE PIPE OUTLET(S), SEE ROADWAY STANDARD DRAWINGS.

AREA BETWEEN THE WINGWALL AND APPROACH SLAB SHALL BE GRADED TO DRAIN THE WATER AWAY FROM THE FILL FACE OF THE BRIDGE AND SHALL BE PAVED.

THE 6" COMP. A.B.C. SHALL BE FLUSH WITH THE ROADWAY END OF THE APPROACH SLAB AND SHALL EXTEND 1'-0" OUTSIDE OF EACH EDGE OF THE APPROACH SLAB.

THE CONTRACTOR MAY USE 4" TYPE B-25.0B ASPHALT CONCRETE BASE COURSE IN LIEU OF 6" COMP. A.B.C. IF THIS OPTION IS USED, THE BASE COURSE SHALL BE FLUSH WITH THE ROADWAY END OF THE APPROACH SLAB, AND THE WIDTH SHALL BE THE SAME AS THAT OF THE APPROACH SLAB.

THE CONTRACTOR MAY USE 5" CLASS "A" CONCRETE BASE IN LIEU OF 6" COMP. A.B.C. IF THIS OPTION IS USED, THE CONCRETE BASE SHALL BE FLUSH WITH THE ROADWAY END OF THE APPROACH SLAB, AND THE WIDTH SHALL BE THE SAME AS THAT OF THE APPROACH SLAB. THE CONCRETE SHALL BE FINISHED TO A SMOOTH SURFACE AND A LAYER OF 30 LB ROOFING FELT SHALL BE PLACED BETWEEN THE CONCRETE BASE AND THE APPROACH SLAB TO PREVENT BOND. THE APPROACH SLAB SHALL NOT BE CAST UNTIL THE CONCRETE BASE HAS REACHED AN AGE OF THREE CURING DAYS.

FOR JOINT DETAILS, SEE "PRESTRESSED CONCRETE CORED SLAB, 25' & 45' SPAN" SHEET.

THE JOINT AT THE END BENT SHALL BE GROUTED AS SOON AS PRACTICAL AFTER THE CONSTRUCTION OF THE APPROACH SLABS.

APPROACH SLAB GROOVING IS NOT REQUIRED.

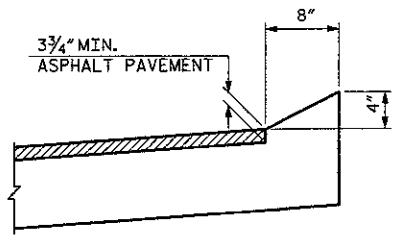

SECTION N-N

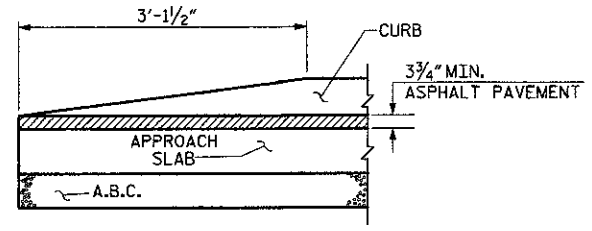

END OF CURB WITHOUT SHOULDER BERM GUTTER

CURB DETAILS

BILL OF MATERIAL

APPROACH SLAB AT EB #1

BAR	NO.	SIZE	TYPE	LENGTH	WEIGHT
* A1	26	#4	STR	19'-5"	337
A2	26	#4	STR	19'-4"	336
* B1	74	#5	STR	11'-3"	868
B2	74	#6	STR	11'-8"	1297
REINFORCING STEEL				LBS.	1633
* EPOXY COATED REINFORCING STEEL				LBS.	1205
CLASS AA CONCRETE				C. Y.	18.7

APPROACH SLAB AT EB #2

BAR	NO.	SIZE	TYPE	LENGTH	WEIGHT
* A1	26	#4	STR	19'-5"	337
A2	26	#4	STR	19'-4"	336
* B1	74	#5	STR	11'-3"	868
B2	74	#6	STR	11'-8"	1297
REINFORCING STEEL				LBS.	1633
* EPOXY COATED REINFORCING STEEL				LBS.	1205
CLASS AA CONCRETE				C. Y.	18.7

PROJECT NO. 42561
CUMBERLAND COUNTY
STATION: 15+95.04 -L-

PLANS PREPARED BY:
MULKEY
ENGINEERS & CONSULTANTS
PO BOX 33157
RALEIGH, NC 27636
(919) 851-1212
(919) 851-1015 (FAX)
WWW.MULKEYINC.COM

THIS STANDARD DRAWING REVIEWED & ADOPTED FOR USE AT THE REFERENCED LOCATION BY THE UNDERSIGNED:

NORTH CAROLINA PROFESSIONAL ENGINEER SEAL 19661 L. KEVIN AUSTIN
10/7/10

STATE OF NORTH CAROLINA
DEPARTMENT OF TRANSPORTATION
RALEIGH

STANDARD BRIDGE APPROACH SLAB FOR PRESTRESSED CONCRETE CORED SLAB UNIT (SUB-REGIONAL TIER)

STD. NO. BAS13

REVISIONS						SHEET NO.
NO.	BY:	DATE:	NO.	BY:	DATE:	11
1			3			TOTAL SHEETS
2			4			30

ASSEMBLED BY :	W. B. ALLEN	DATE :	1/10
CHECKED BY :	L. K. AUSTIN	DATE :	9/10
DRAWN BY :	KMM 3-08		
CHECKED BY :	GM 3-08		

10/7/2010 10:28:25 AM R:\STructures\BAS\SD_SD_45_0.dgn

01-JUN-2009 14:15
s:\contracts\contracts\special details\sricword\stds\06' stds to special details\42211\bridge approach fill sub reg tier.dgn
.jhowerton AT PS237501

STATE OF NORTH CAROLINA
DEPT. OF TRANSPORTATION
DIVISION OF HIGHWAYS
RALEIGH, N.C.

ENGLISH DETAIL DRAWING FOR

BRIDGE APPROACH FILLS

CORED SLAB & BOX BEAM BRIDGES
SUB REGIONAL TIER

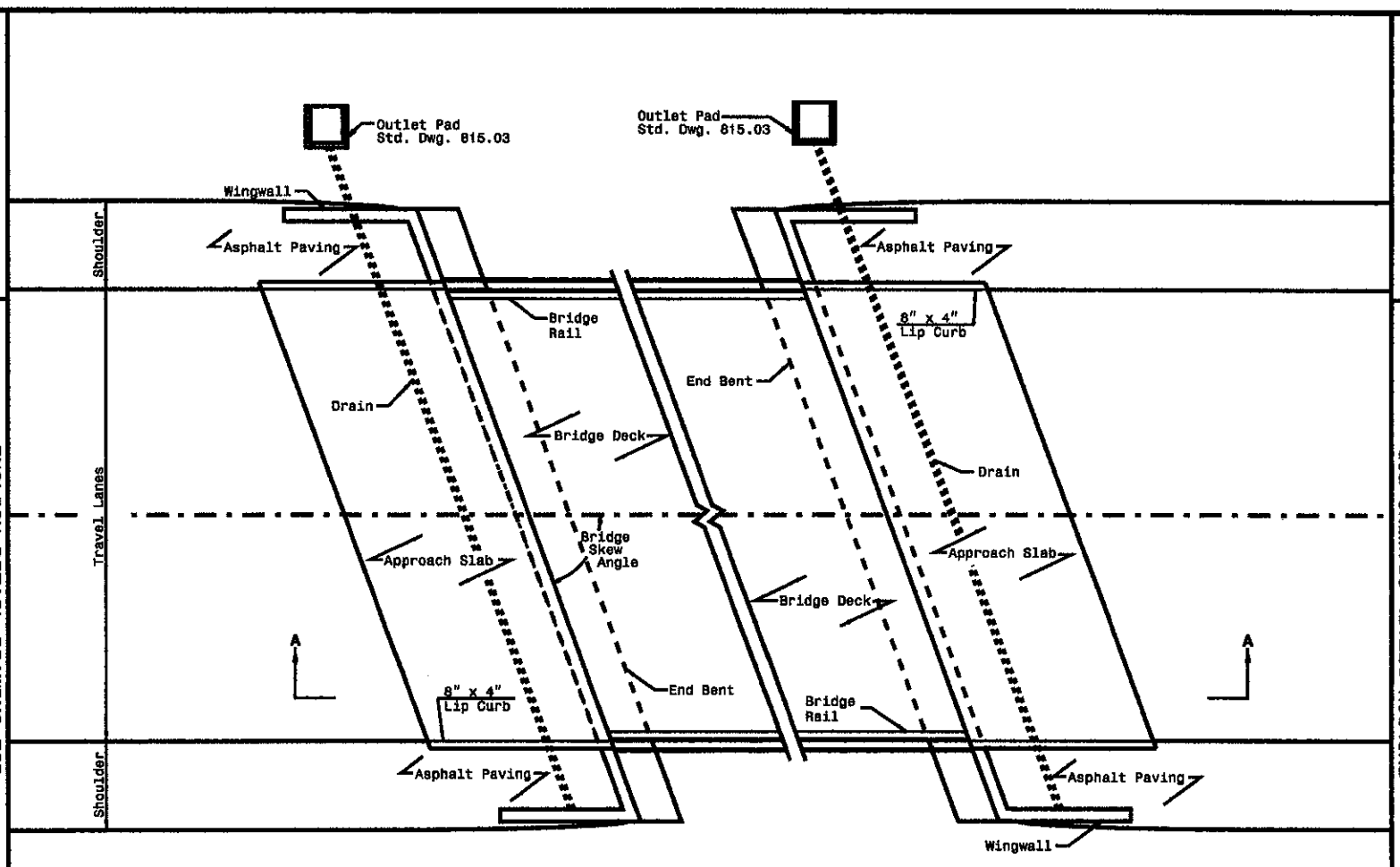

PLAN VIEW
12' APPROACH SLAB

SHEET 1 OF 2
422D11

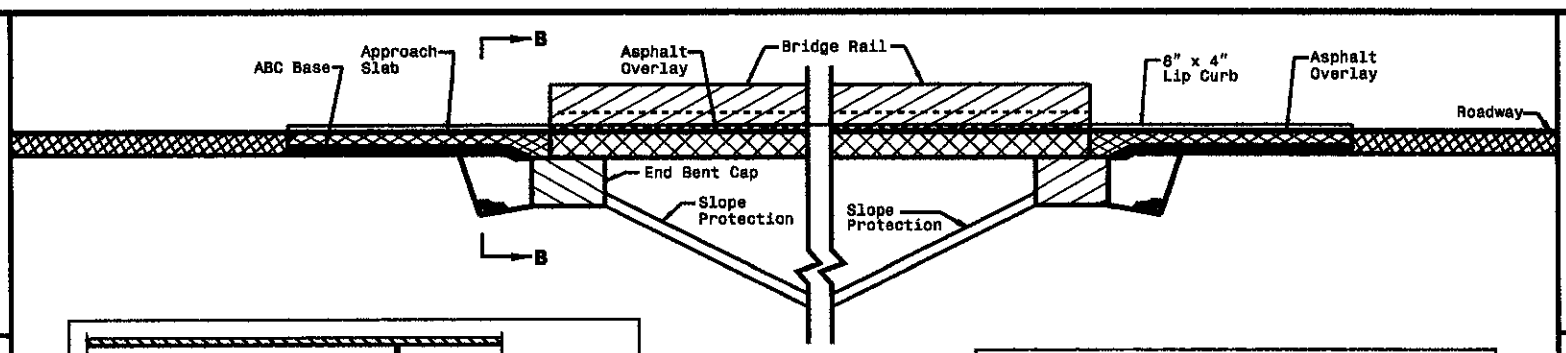

SECTION A-A

SECTION B-B

12' APPROACH SLAB

SHEET 2 OF 2
422D11

PROJECT SERVICES UNIT
STANDARDS AND SPECIAL DESIGN
Office 919-250-4128 FAX 919-250-4119

BRIDGE APPROACH FILLS
CORED SLAB & BOX BEAM BRIDGES
SUB REGIONAL TIER

ORIGINAL BY: K. A. Kempf DATE: 6-10-08
MODIFIED BY: DATE:
CHECKED BY: DATE:
FILE SPEC.: \kempf\english\bridge approach fills.dgn

PROJECT REFERENCE NO. BK-5110
SHEET NO. 12

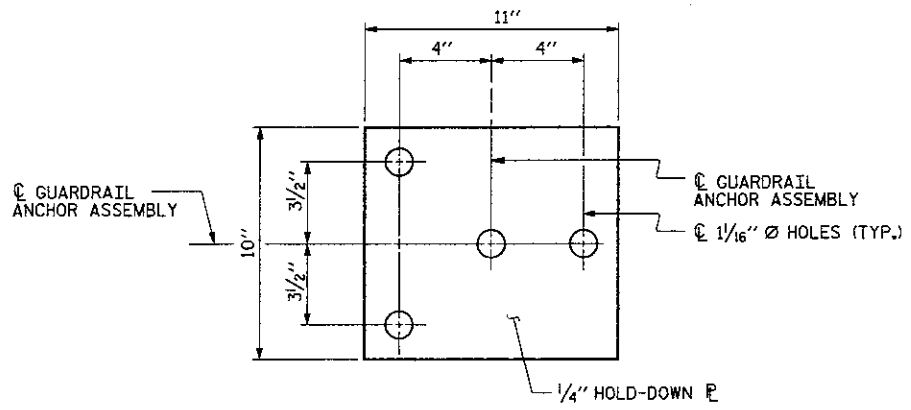

PLAN

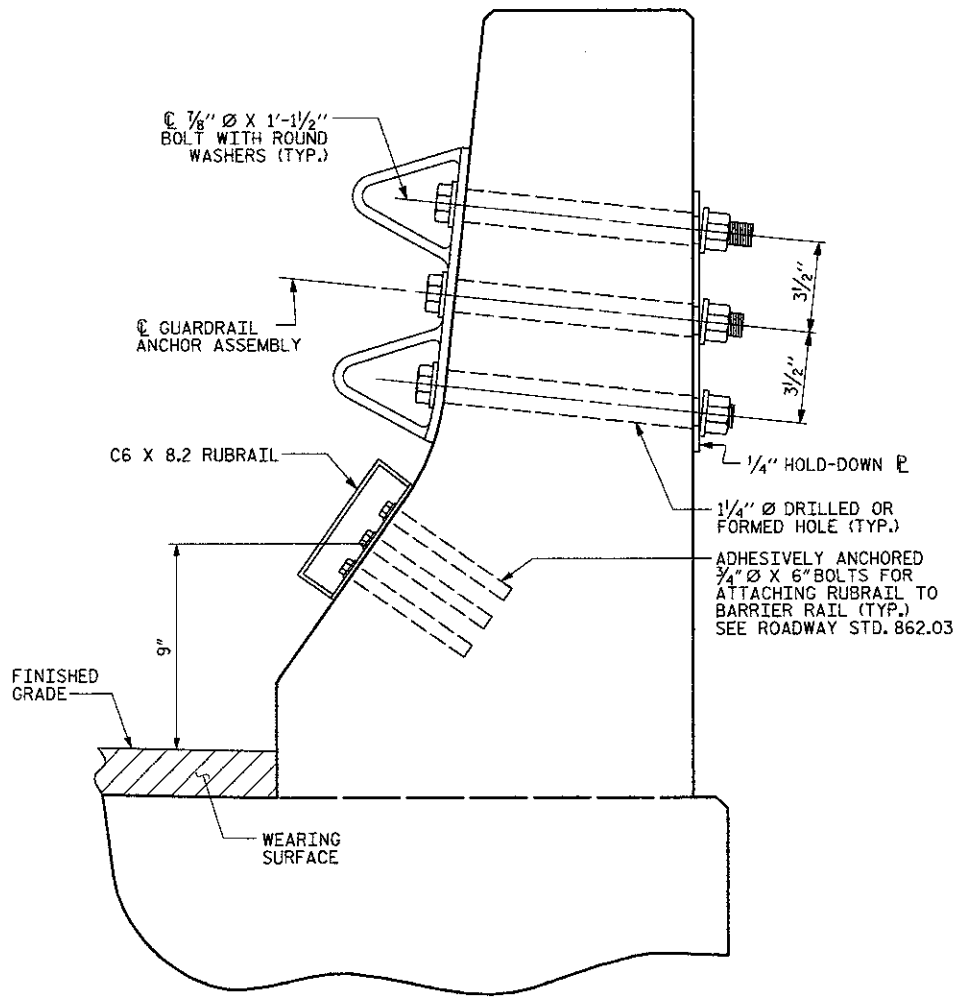

SECTION E-E

GUARDRAIL ANCHOR ASSEMBLY DETAILS

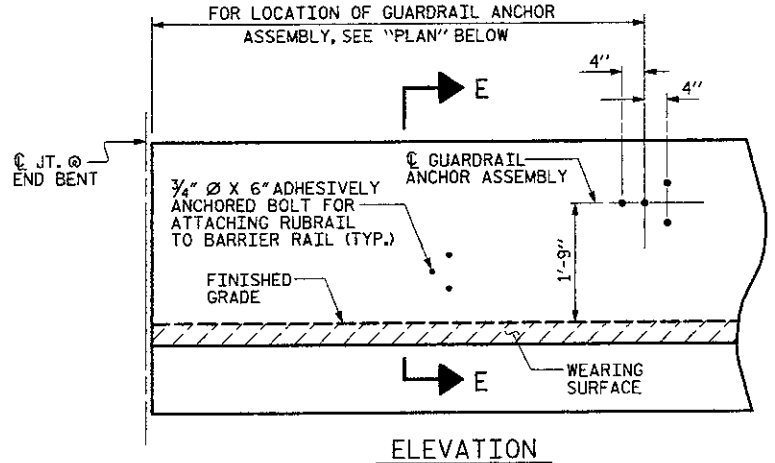

ELEVATION

FOR LOCATION OF RUBRAIL, SEE ROADWAY STD. 862.03

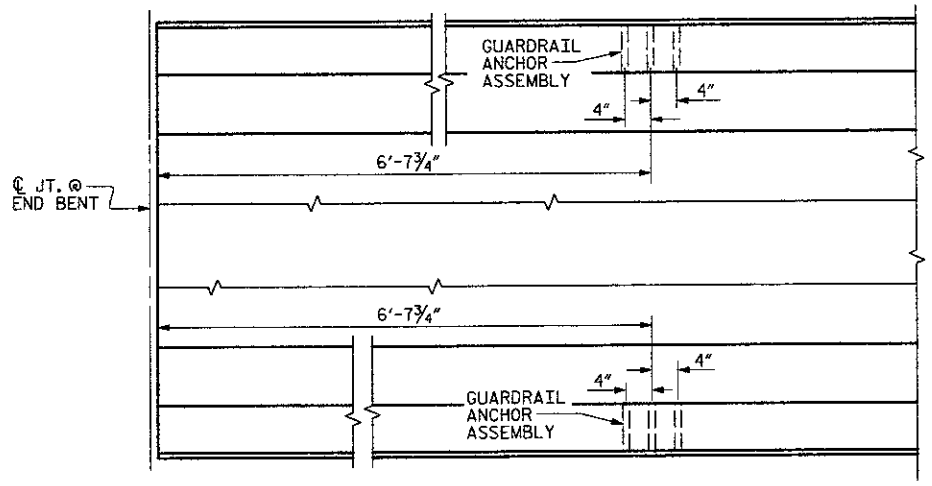

PLAN

LOCATION OF ANCHORS FOR GUARDRAIL

END BENT #1 SHOWN, END BENT #2 SIMILAR.

NOTES

THE GUARDRAIL ANCHOR ASSEMBLY SHALL CONSIST OF A ¼" HOLD DOWN PLATE AND 4 - ⅞" Ø BOLTS WITH NUTS AND WASHERS, RUBRAIL, AND ADHESIVELY ANCHORED BOLTS.

THE HOLD-DOWN PLATE SHALL CONFORM TO AASHTO M270 GRADE 36. AFTER FABRICATION, THE HOLD-DOWN PLATE SHALL BE HOT-DIP GALVANIZED IN ACCORDANCE WITH AASHTO M111.

BOLTS SHALL CONFORM TO THE REQUIREMENTS OF ASTM A307 AND NUTS SHALL CONFORM TO THE REQUIREMENTS OF AASHTO M291. BOLTS, NUTS AND WASHERS SHALL BE GALVANIZED. (AT THE CONTRACTOR'S OPTION, STAINLESS STEEL BOLTS, NUTS AND WASHERS MAY BE USED AS AN ALTERNATE FOR THE ⅞" Ø GALVANIZED BOLTS, NUTS AND WASHERS. THEY SHALL CONFORM TO OR EXCEED THE MECHANICAL REQUIREMENTS OF ASTM A307. THE USE OF THIS ALTERNATE SHALL BE APPROVED BY THE ENGINEER.)

THE GUARDRAIL ANCHOR ASSEMBLY IS REQUIRED AT ALL POINTS WHERE APPROACH GUARDRAIL IS TO BE ATTACHED TO THE END OF BARRIER RAIL. FOR POINTS OF ATTACHMENT, SEE SKETCH.

AFTER INSTALLATION, THE EXPOSED THREAD OF THE BOLT SHALL BE BURRED WITH A SHARP POINTED TOOL.

THE COST OF THE GUARDRAIL ANCHOR ASSEMBLY SHALL BE INCLUDED IN THE UNIT CONTRACT PRICE BID FOR CONCRETE BARRIER RAIL.

THE 1 ¼" Ø HOLES SHALL BE FORMED OR DRILLED WITH A CORE BIT. IMPACT TOOLS WILL NOT BE PERMITTED. ANY CONCRETE DAMAGED BY THIS WORK SHALL BE REPAIRED TO THE SATISFACTION OF THE ENGINEER.

THE C6 X 8.2 RUBRAIL IS TO BE ADHESIVELY ANCHORED TO THE RAIL USING THREE ¾" Ø X 6" BOLTS WITH WASHERS. LEVEL ONE FIELD TESTING IS REQUIRED, AND THE YIELD LOAD OF THE ¾" Ø BOLT IS 12 KIPS. FOR ADHESIVELY ANCHORED ANCHOR BOLTS OR DOWELS, SEE SPECIAL PROVISIONS. SEE ROADWAY STANDARD 862.03 FOR DETAILS AND LOCATION OF THE RUBRAIL.

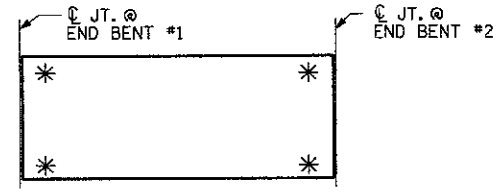

SKETCH SHOWING POINTS OF ATTACHMENTS

✳ DENOTES GUARDRAIL ANCHOR ASSEMBLY

PROJECT NO. 42561

CUMBERLAND COUNTY

STATION: 15+95.04 -L-

STATE OF NORTH CAROLINA
DEPARTMENT OF TRANSPORTATION
RALEIGH
STANDARD

GUARDRAIL ANCHORAGE FOR BARRIER RAIL

STD. NO. GRA2

REVISIONS						SHEET NO.
NO.	BY:	DATE:	NO.	BY:	DATE:	13
1			3			TOTAL SHEETS
2			4			30

THIS STANDARD DRAWING REVIEWED & ADOPTED FOR USE AT THE REFERENCED LOCATION BY THE UNDERSIGNED:

NORTH CAROLINA PROFESSIONAL ENGINEER SEAL 19661 L. KEVIN AUSTIN 10/7/10

PLANS PREPARED BY:

MULKEY
ENGINEERS & CONSULTANTS
PO Box 25127
RALEIGH, N.C. 27611
(919) 851-1212
(919) 851-1918 (FAX)
WWW.MULKEYINC.COM

ASSEMBLED BY : W. B. ALLEN	DATE : 1/10	ADDED 5/1/06R KMM/GM	
CHECKED BY : L. K. AUSTIN	DATE : 8/10		
DRAWN BY : TLA 5/06			
CHECKED BY : GM 5/06			

10/7/2010 7:08:37 AM R:\Structures\DRGNS\GRA2.SD.GR.dwgn

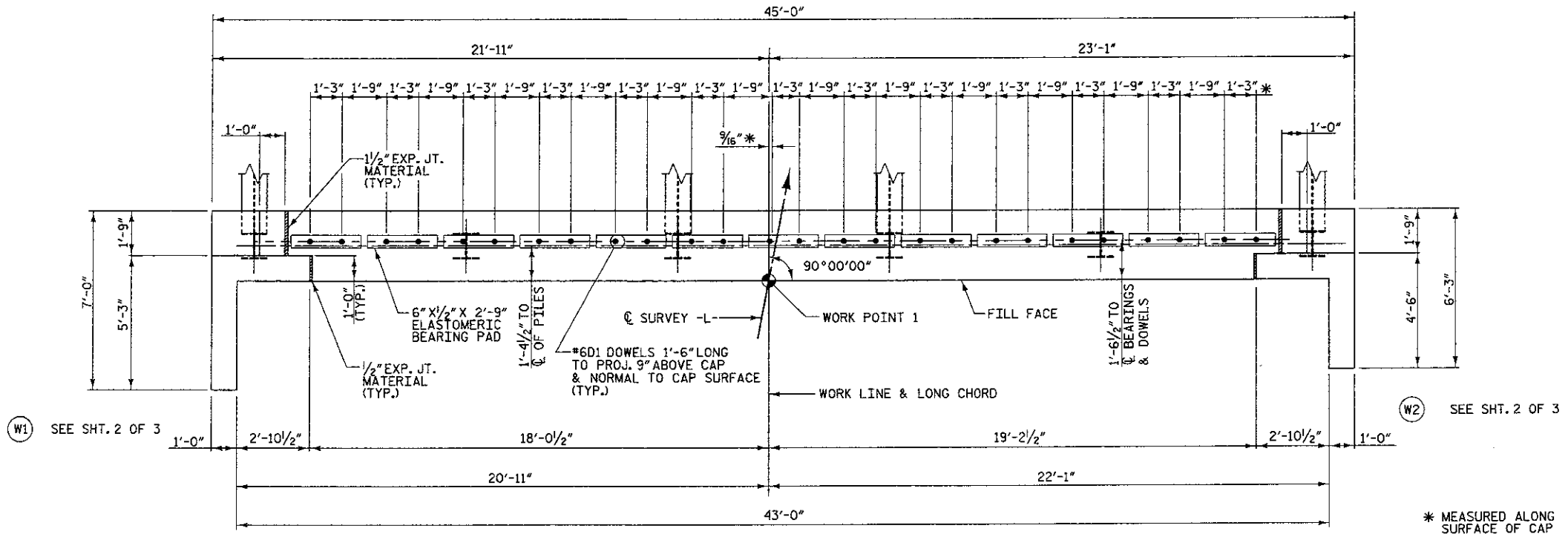

PLAN

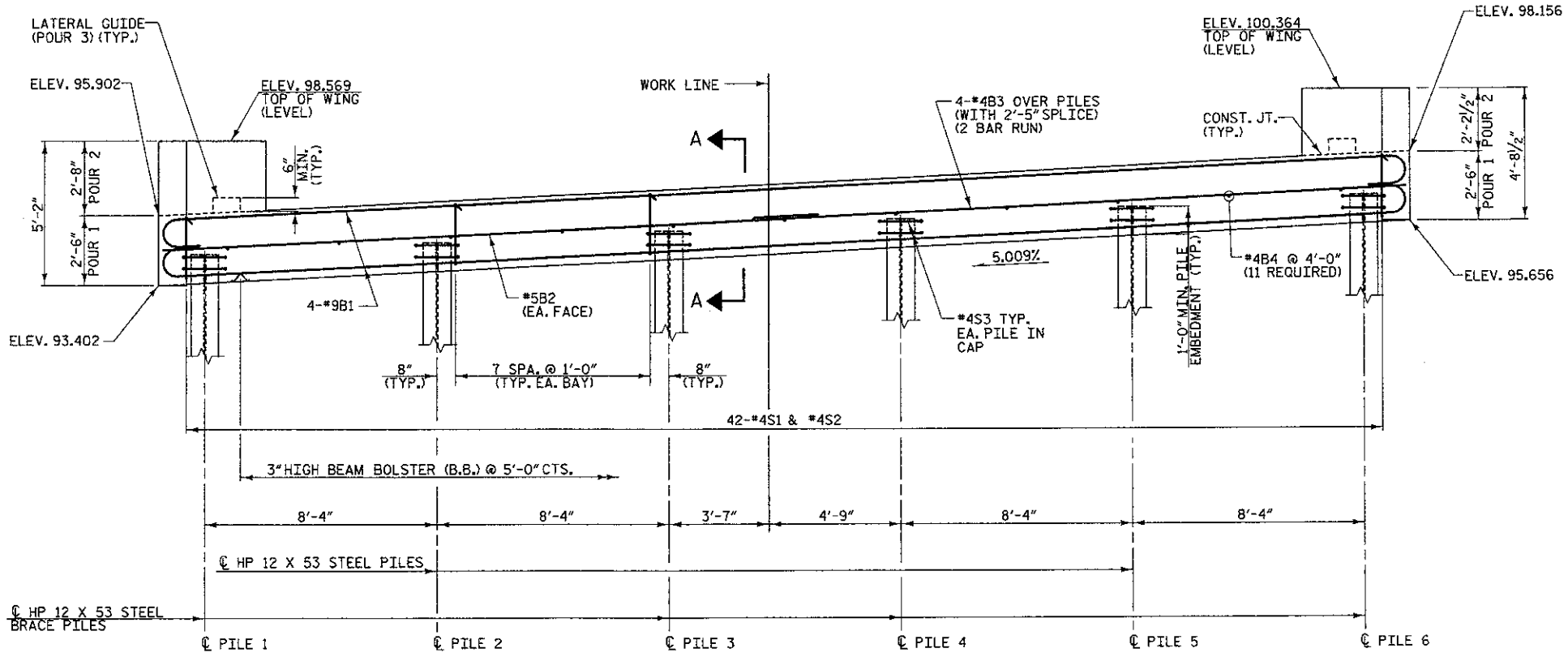

ELEVATION

NOTES

STIRRUPS IN CAP MAY BE SHIFTED AS NECESSARY TO CLEAR #6D1 DOWELS.

FOR DOWEL DETAIL SEE SHEET 3 OF 3.

FOR LATERAL GUIDE DETAIL SEE SHEET 3 OF 3.

PILE CUT-OFF ELEVATIONS	
PILE NO.	ELEV.
1	94.511
2	94.928
3	95.345
4	95.763
5	96.180
6	96.598

PROJECT NO. 42561

CUMBERLAND COUNTY

STATION: 15+95.04 -L-

REPLACES BRIDGE NO. 11 SHEET 1 OF 3

STATE OF NORTH CAROLINA
DEPARTMENT OF TRANSPORTATION
RALEIGH

SUBSTRUCTURE END BENT 1

35'-10" CLEAR ROADWAY - 90° SKEW

NORTH CAROLINA PROFESSIONAL SEAL 19661 ENGINEER KEVIN AUSTIN 10/7/10

PLANS PREPARED BY:
MULKEY ENGINEERS & CONSULTANTS
PO BOX 33127 RALEIGH, N.C. 27636 (919) 851-1912 (919) 851-1918 (FAX) WWW.MULKEYINC.COM

REVISIONS						SHEET NO.
NO.	BY:	DATE:	NO.	BY:	DATE:	14
1			3			TOTAL SHEETS
2			4			30

DRAWN BY : W. B. ALLEN DATE : 5/09
CHECKED BY : L. K. AUSTIN DATE : 6/09

10/7/2010 1:58:07 PM R:\Structures\BK5140_SD_EL01.dgn

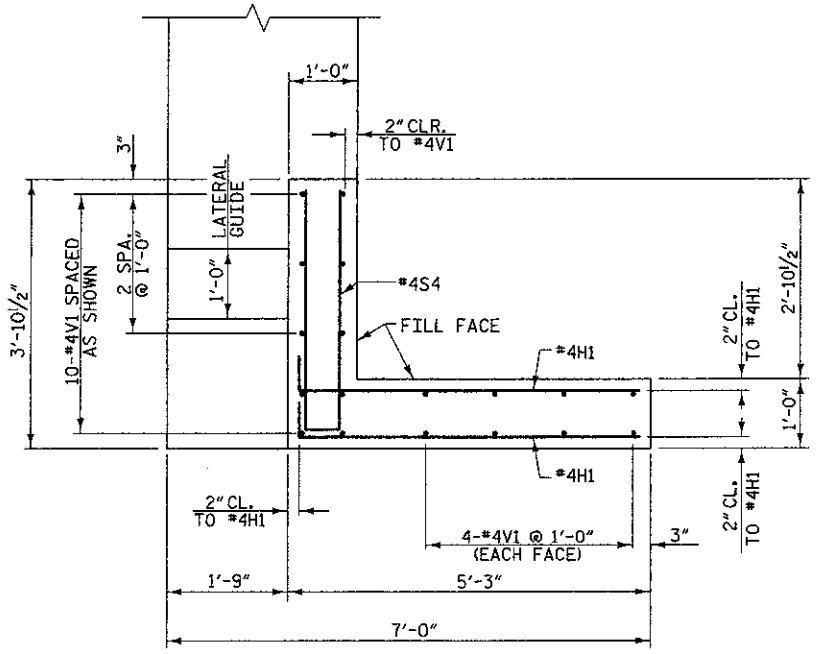

W1 PLAN OF LEFT WING

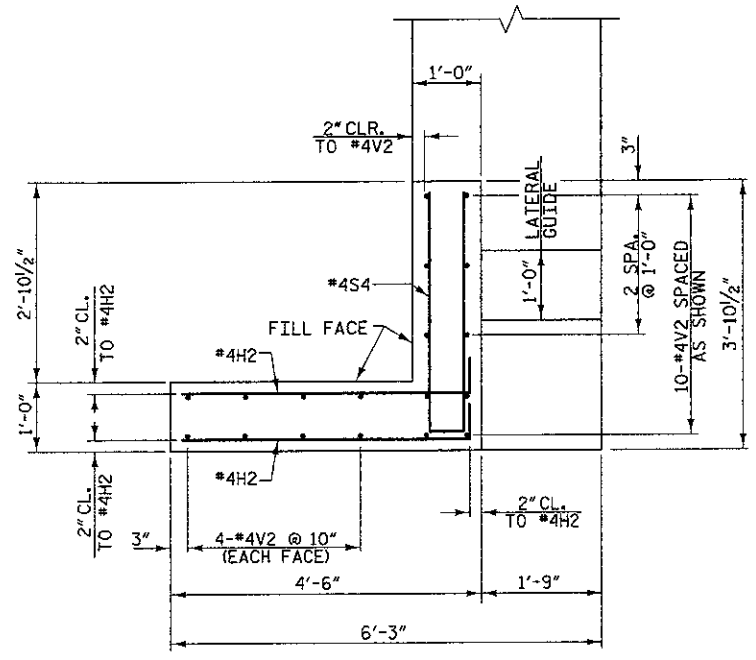

W2 PLAN OF RIGHT WING

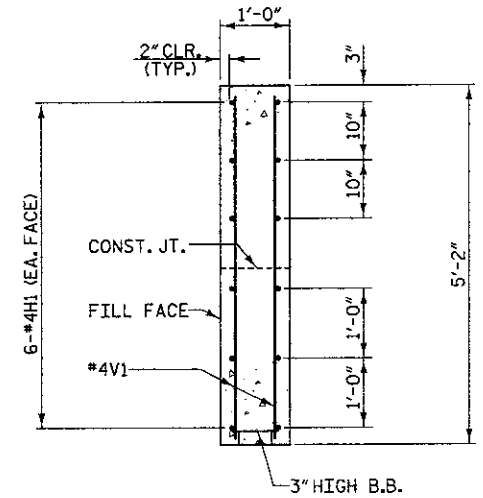

SECTION X-X

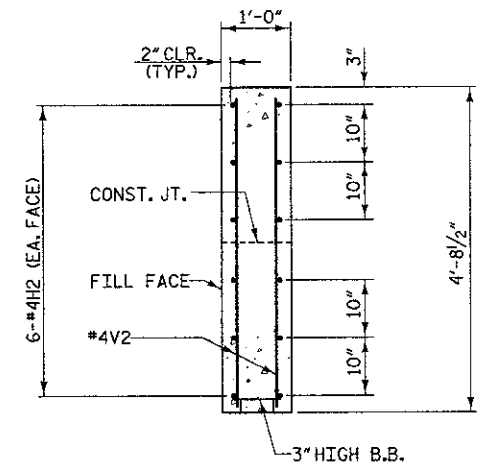

SECTION Y-Y

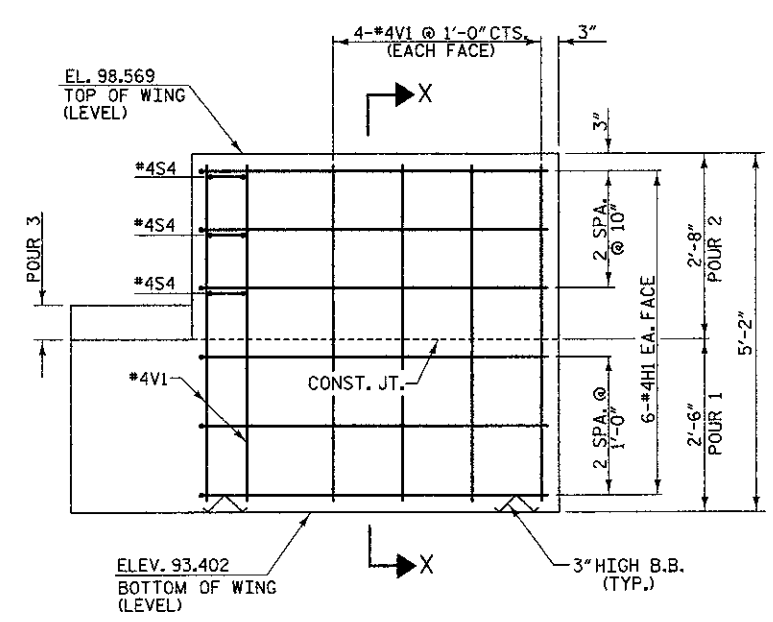

W1 ELEVATION OF LEFT WING

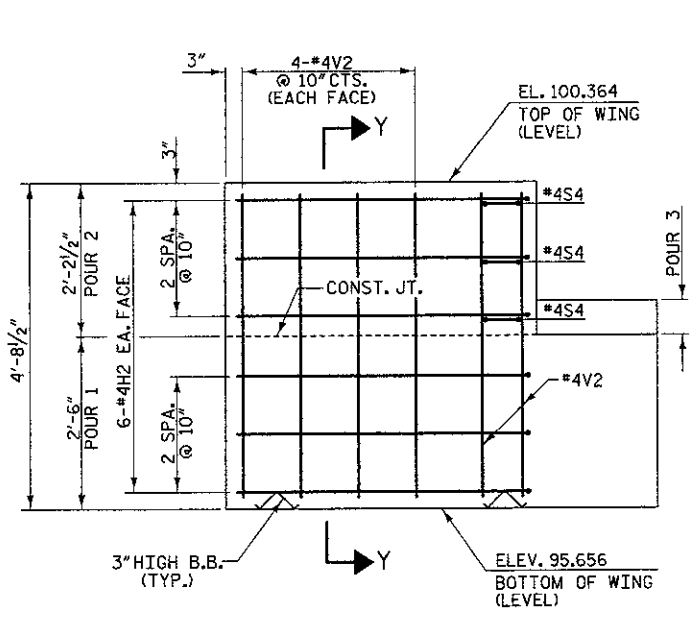

W2 ELEVATION OF RIGHT WING

PROJECT NO. 42561

CUMBERLAND COUNTY

STATION: 15+95.04 -L-

REPLACES BRIDGE NO. 11 SHEET 2 OF 3

STATE OF NORTH CAROLINA
DEPARTMENT OF TRANSPORTATION
RALEIGH

SUBSTRUCTURE END BENT 1

35'-10" CLEAR ROADWAY - 90° SKEW

NORTH CAROLINA PROFESSIONAL ENGINEER 19661 KEVIN AUSTIN 10/7/10

PLANS PREPARED BY:
MULKEY ENGINEERS & CONSULTANTS
PO Box 33127 Raleigh, N.C. 27636 (919) 851-1912 (919) 851-1918 (FAX) WWW.MULKEYINC.COM

REVISIONS						SHEET NO.
NO.	BY:	DATE:	NO.	BY:	DATE:	15
1			3			TOTAL SHEETS
2			4			30

DRAWN BY : W. B. ALLEN DATE : 5/09
CHECKED BY : L. K. AUSTIN DATE : 6/09

10/7/2010 7:54:41 AM R:\Structures\BK5190_SD_EL02.dgn

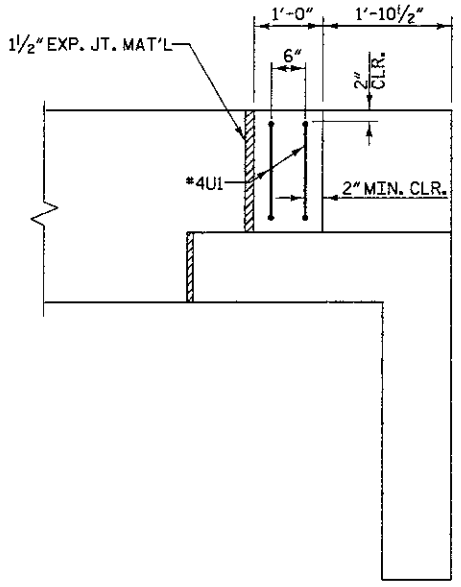

PLAN

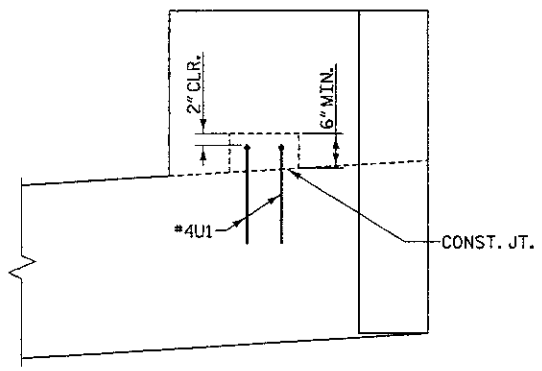

ELEVATION

LATERAL GUIDE DETAIL

LATERAL GUIDES ARE NOT TO BE POURED UNTIL ALL CORED SLAB UNITS ARE IN PLACE AND TRANSVERSE STRANDS ARE TENSIONED.

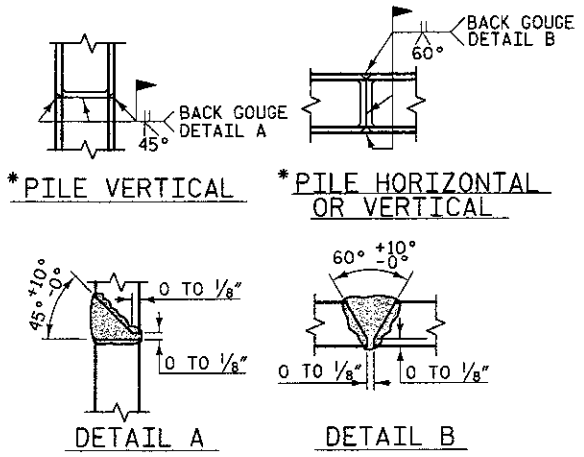

*PILE VERTICAL

*PILE HORIZONTAL OR VERTICAL

DETAIL A

DETAIL B

PILE SPLICE DETAILS

*POSITION OF PILE DURING WELDING.

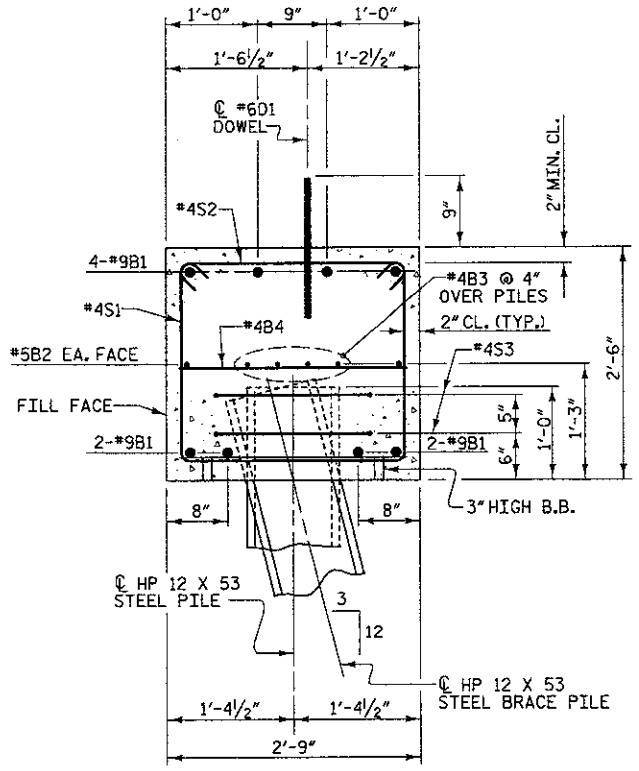

SECTION A-A

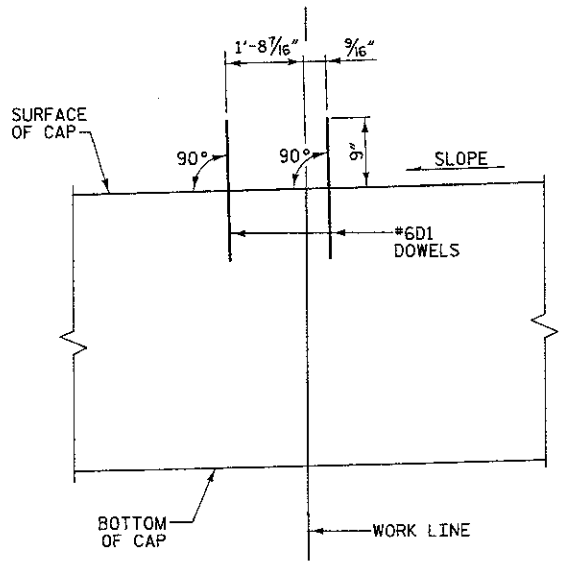

DOWEL DETAIL

BAR TYPES

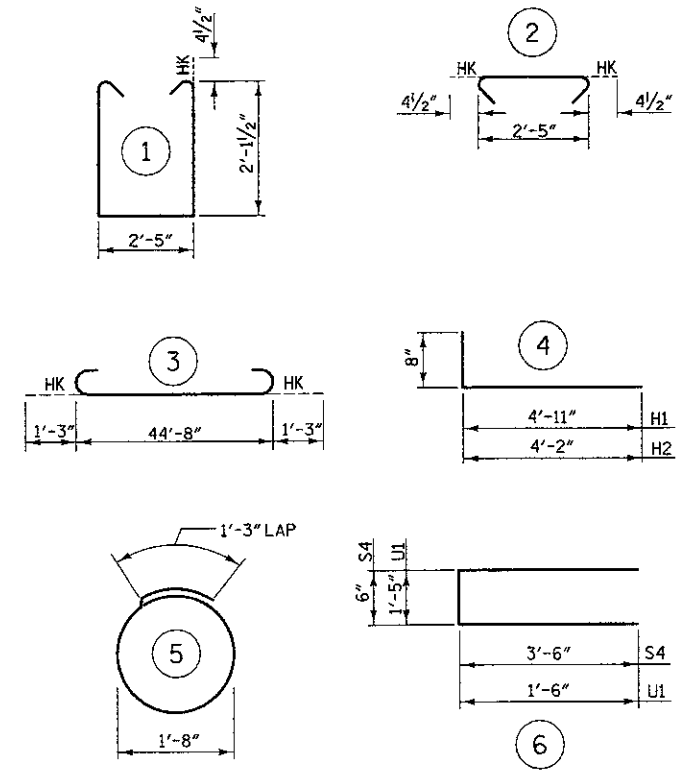

ALL BAR DIMENSIONS ARE OUT TO OUT

BILL OF MATERIAL

FOR END BENT 1

BAR	NO.	SIZE	TYPE	LENGTH	WEIGHT
B1	8	#9	3	47'-2"	1283
B2	2	#5	STR	44'-8"	93
B3	8	#4	STR	23'-7"	126
B4	11	#4	STR	2'-5"	18
D1	26	#6	STR	1'-6"	59
H1	12	#4	4	5'-7"	45
H2	12	#4	4	4'-10"	39
S1	42	#4	1	7'-5"	208
S2	42	#4	2	3'-2"	89
S3	12	#4	5	6'-6"	52
S4	6	#4	6	7'-6"	30
U1	4	#4	6	4'-5"	12
V1	18	#4	STR	4'-10"	58
V2	18	#4	STR	4'-4"	52

TOTAL REINFORCING STEEL =	2164 lbs.
CLASS "A" CONCRETE - CU. YARDS	
POUR 1	12.2 cu. yds.
POUR 2	1.4 cu. yds.
POUR 3	0.1 cu. yds.
TOTAL	13.7 cu. yds.
HP 12 X 53 GALVANIZED STEEL PILES	
6 PILES REQUIRED - LIN. FEET	360

PROJECT NO. 42561

CUMBERLAND COUNTY

STATION: 15+95.04 -L-

REPLACES BRIDGE NO. 11 SHEET 3 OF 3

STATE OF NORTH CAROLINA
DEPARTMENT OF TRANSPORTATION
RALEIGH

SUBSTRUCTURE END BENT 1

35'-10" CLEAR ROADWAY - 90° SKEW

NORTH CAROLINA PROFESSIONAL ENGINEER SEAL 19661 L. KEVIN AUSTIN 10/7/10

PLANS PREPARED BY:
MULKEY ENGINEERS & CONSULTANTS
PO Box 33127 Raleigh, N.C. 27636
(919) 851-1912
(919) 851-1918 (FAX)
WWW.MULKEYINC.COM

REVISIONS						SHEET NO.
NO.	BY:	DATE:	NO.	BY:	DATE:	16
1			3			TOTAL SHEETS
2			4			30

DRAWN BY : W. B. ALLEN DATE : 5/09
CHECKED BY : L. K. AUSTIN DATE : 6/09

10/7/2010 7:14:15 AM R:\Structures\BK5110_SD_EL03.dgn

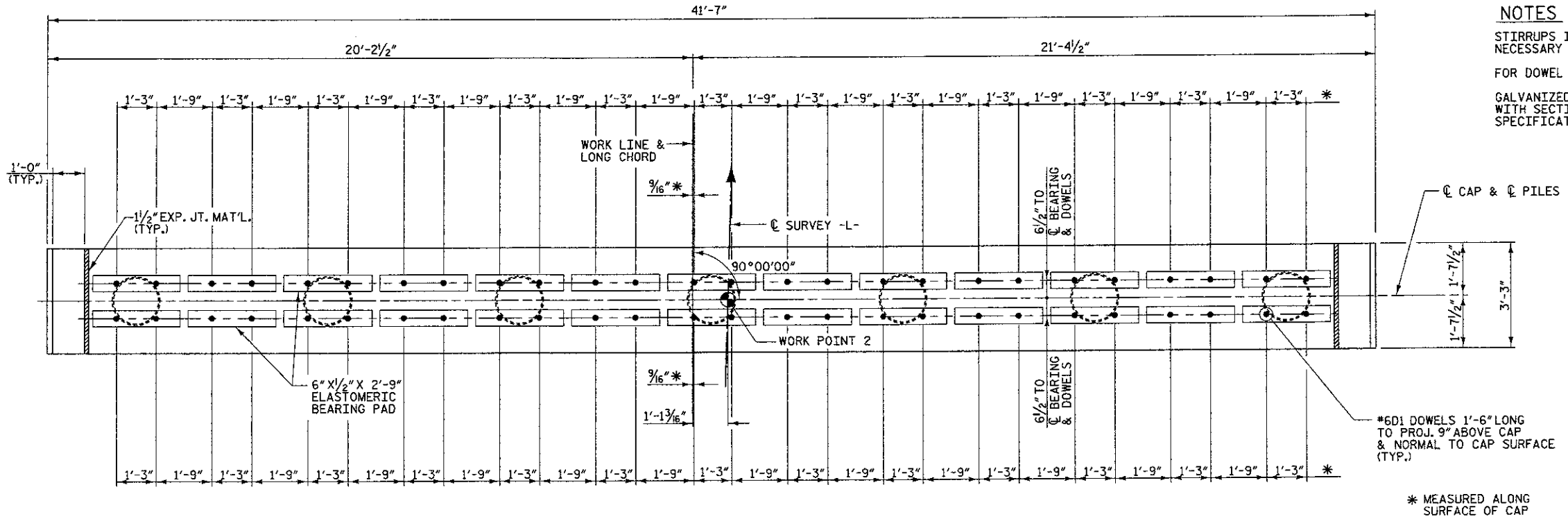

PLAN

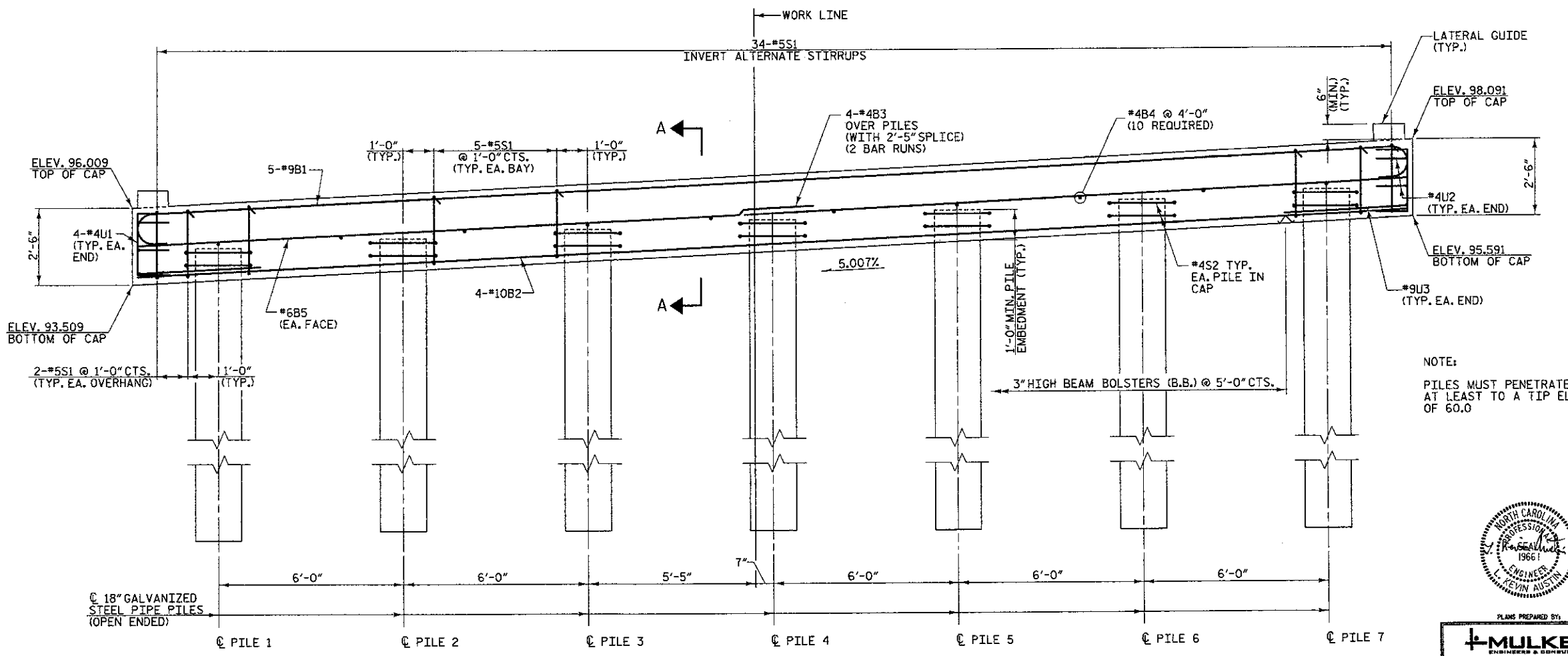

ELEVATION

NOTES

STIRRUPS IN CAP MAY BE SHIFTED AS NECESSARY TO CLEAR #6D1 DOWELS.

FOR DOWEL DETAIL, SEE END BENT 1 SHEET 3 OF 3.

GALVANIZED STEEL PILES ARE REQUIRED IN ACCORDANCE WITH SECTION 450 AND SECTION 1076 OF THE STANDARD SPECIFICATIONS.

PILE CUT-OFF ELEVATIONS

PILE NO.	ELEV.
1	94.686
2	94.987
3	95.287
4	95.588
5	95.888
6	96.188
7	96.489

NOTE:

PILES MUST PENETRATE AT LEAST TO A TIP ELEV. OF 60.0

PROJECT NO. 42561

CUMBERLAND COUNTY

STATION: 15+95.04 -L-

REPLACES BRIDGE NO. 11 SHEET 1 OF 2

STATE OF NORTH CAROLINA
DEPARTMENT OF TRANSPORTATION
RALEIGH

SUBSTRUCTURE BENT 1

35'-10" CLEAR ROADWAY - 90° SKEW

NORTH CAROLINA PROFESSIONAL SEAL 1966 ENGINEER KEVIN AUSTIN 10/7/10

PLANS PREPARED BY:

MULKEY ENGINEERS & CONSULTANTS
PO Box 33187
Raleigh, N.C. 27636
(919) 851-1918 (FAX)
www.mulkeyinc.com

REVISIONS						SHEET NO.
NO.	BY:	DATE:	NO.	BY:	DATE:	17
1			3			TOTAL SHEETS
2			4			30

DRAWN BY : W. B. ALLEN DATE : 5/09
CHECKED BY : L. K. AUSTIN DATE : 6/09

10/7/2010 7:19:50 AM R:\Structures\BR50_53_8_0.dgn

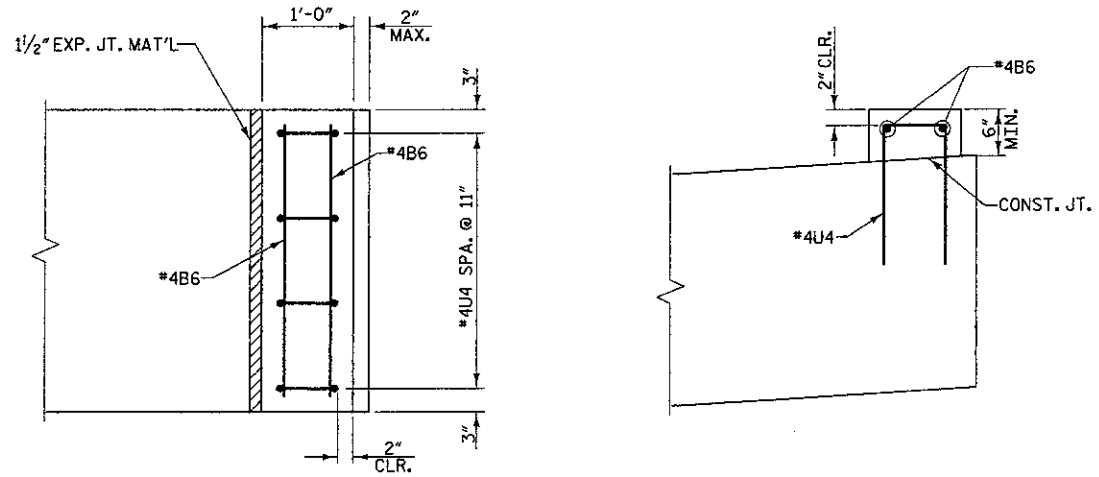

PLAN

ELEVATION

LATERAL GUIDE DETAIL

NOTE: LATERAL GUIDES ARE NOT TO BE POURED UNTIL ALL CORED SLAB UNITS ARE IN PLACE AND TRANSVERSE STRANDS ARE TENSIONED.

BAR TYPES

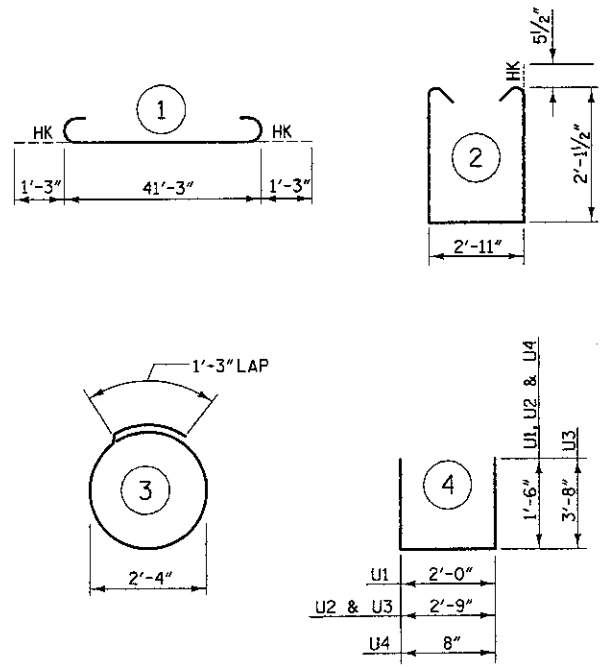

ALL BAR DIMENSIONS ARE OUT TO OUT

BILL OF MATERIAL

FOR BENT 1

BAR	NO.	SIZE	TYPE	LENGTH	WEIGHT
B1	5	#9	1	43'-9"	744
B2	4	#10	STR	41'-3"	710
B3	8	#4	STR	21'-10"	117
B4	10	#4	STR	2'-11"	19
B5	2	#6	STR	41'-3"	124
B6	4	#4	STR	2'-11"	8
D1	52	#6	STR	1'-6"	117
S1	34	#5	2	8'-1"	287
S2	14	#4	3	8'-7"	80
U1	8	#4	4	5'-0"	27
U2	4	#4	4	5'-9"	15
U3	2	#9	4	10'-1"	69
U4	8	#4	4	3'-8"	20

TOTAL REINFORCING STEEL = 2337 lbs.

CLASS "A" CONCRETE - CU. YARDS

POUR 1	12.1 cu. yds.
POUR 2	0.2 cu. yds.
TOTAL	12.3 cu. yds.

18" GALVANIZED STEEL PIPE PILES

7 PILES REQUIRED - LIN. FEET 385

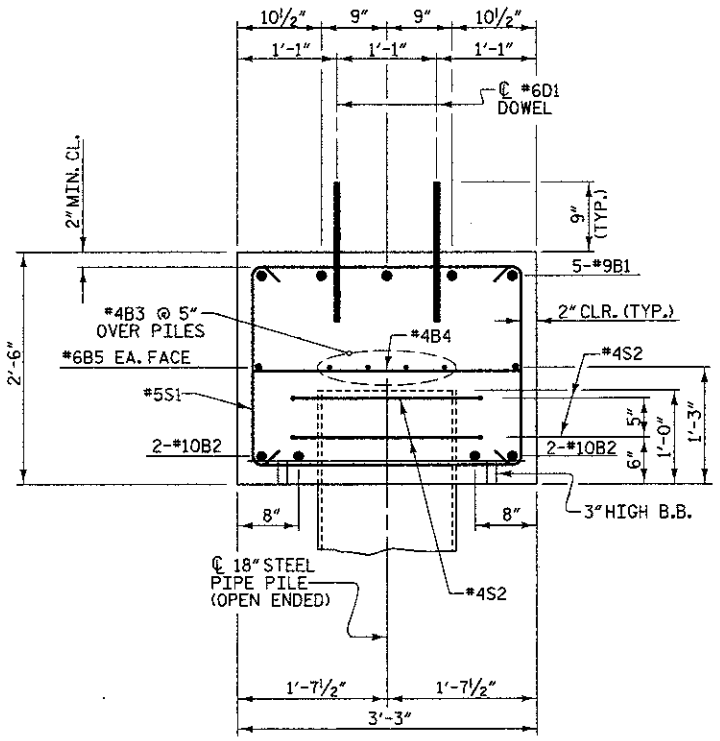

SECTION A-A

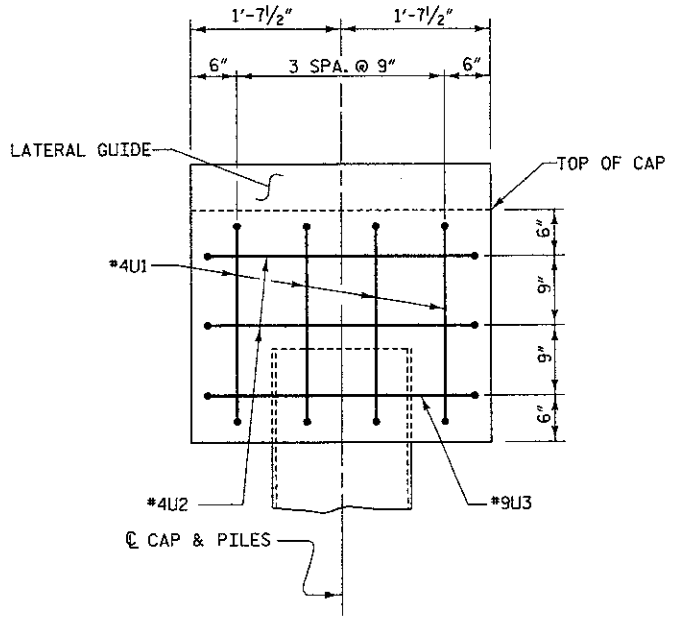

END VIEW

(TYPICAL BOTH ENDS)

PROJECT NO. 42561

CUMBERLAND COUNTY

STATION: 15+95.04 -L-

REPLACES BRIDGE NO. 11 SHEET 2 OF 2

STATE OF NORTH CAROLINA
DEPARTMENT OF TRANSPORTATION
RALEIGH

SUBSTRUCTURE BENT 1

35'-10" CLEAR ROADWAY - 90° SKEW

NORTH CAROLINA PROFESSIONAL ENGINEER 19661 L. KEVIN AUSTIN 10/7/10

PLANS PREPARED BY:
MULKEY ENGINEERS & CONSULTANTS
PO Box 33127 Raleigh, N.C. 27636
(919) 851-1912
(919) 851-1918 (FAX)
WWW.MULKEYINC.COM

REVISIONS						SHEET NO.
NO.	BY:	DATE:	NO.	BY:	DATE:	18
1			3			TOTAL SHEETS
2			4			30

DRAWN BY : W. B. ALLEN DATE : 5/09
CHECKED BY : L. K. AUSTIN DATE : 6/09

10/7/2010 T:20x24 AU R:\Structures\BK5101_SD_BL02.dgn

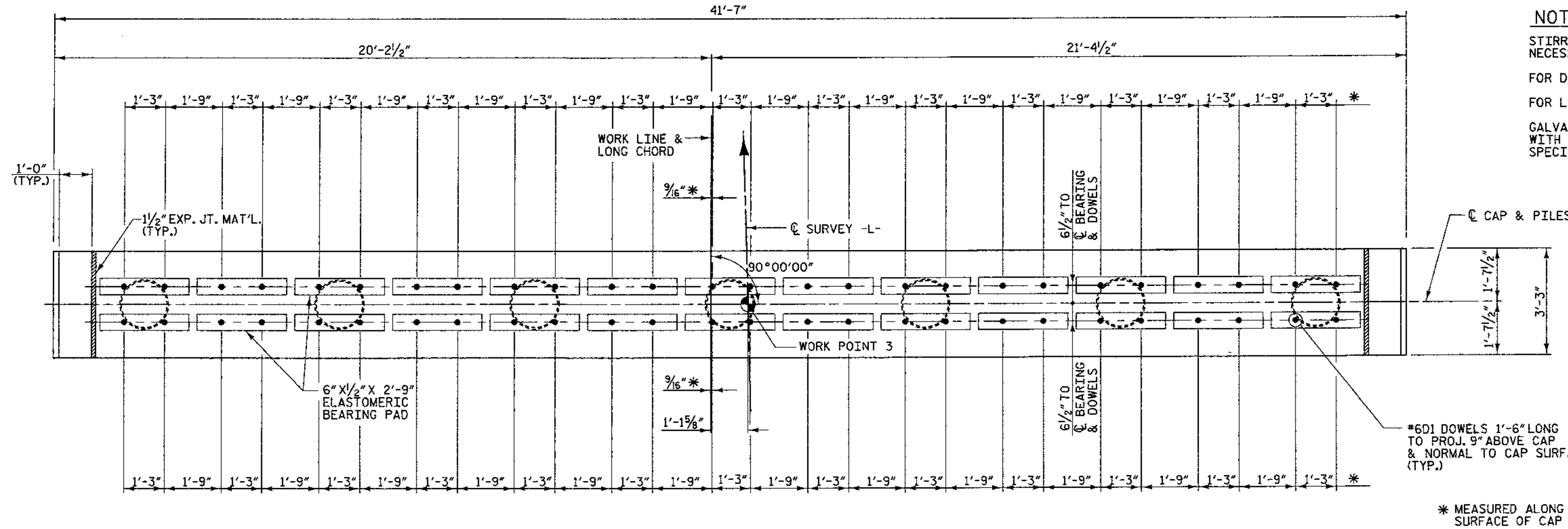

PLAN

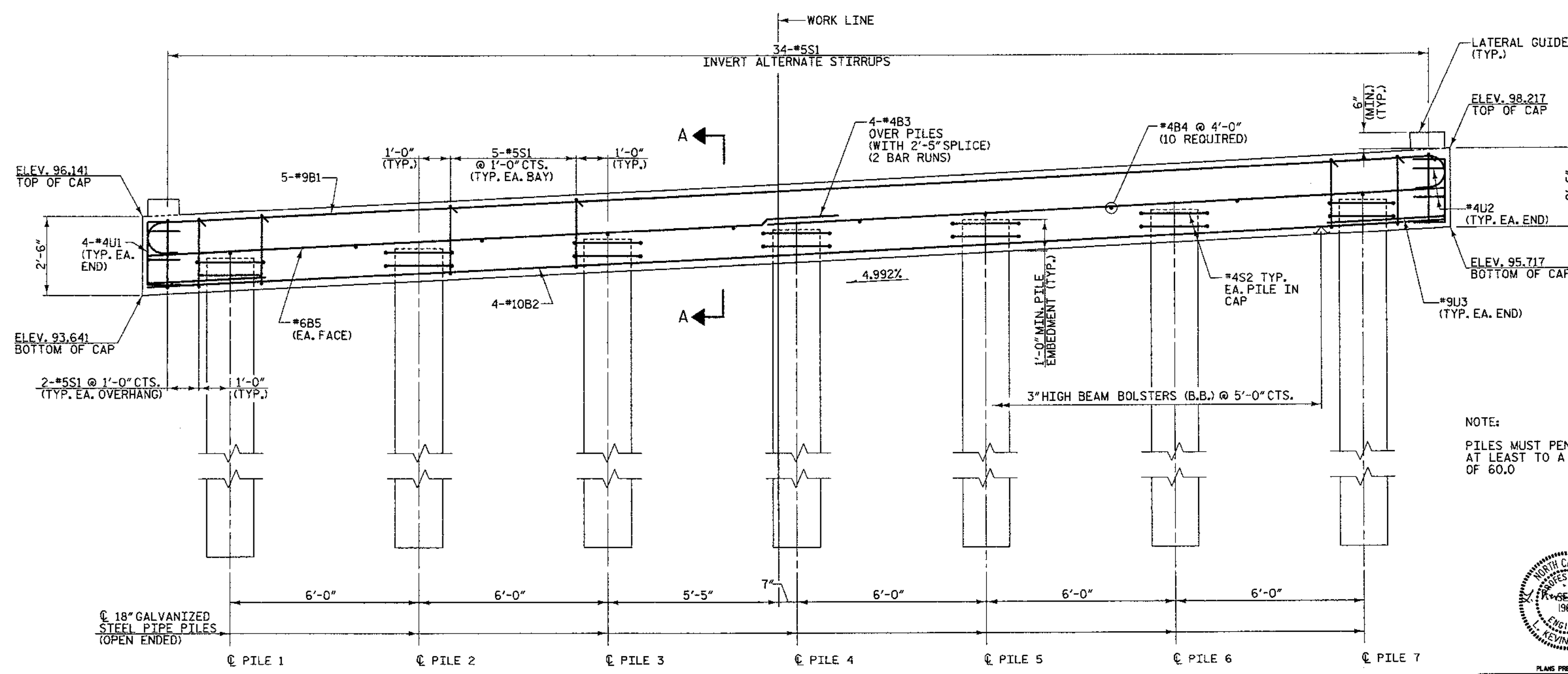

ELEVATION

NOTES

STIRRUPS IN CAP MAY BE SHIFTED AS NECESSARY TO CLEAR #6D1 DOWELS.

FOR DOWEL DETAIL, SEE END BENT 1 SHEET 3 OF 3.

FOR LATERAL GUIDE DETAIL, SEE BENT 1 SHEET 2 OF 2.

GALVANIZED STEEL PILES ARE REQUIRED IN ACCORDANCE WITH SECTION 450 AND SECTION 1076 OF THE STANDARD SPECIFICATIONS.

PILE CUT-OFF ELEVATIONS

PILE NO.	ELEV.
1	94.818
2	95.117
3	95.417
4	95.716
5	96.016
6	96.316
7	96.615

NOTE:

PILES MUST PENETRATE AT LEAST TO A TIP ELEV. OF 60.0

PROJECT NO. 42561

CUMBERLAND COUNTY

STATION: 15+95.04 -L-

REPLACES BRIDGE NO. 11 SHEET 1 OF 2

STATE OF NORTH CAROLINA
DEPARTMENT OF TRANSPORTATION
RALEIGH

SUBSTRUCTURE
BENT 2

35'-10" CLEAR ROADWAY - 90° SKEW

PLANS PREPARED BY:
MULKEY ENGINEERS & CONSULTANTS

REVISIONS						SHEET NO.
NO.	BY:	DATE:	NO.	BY:	DATE:	19
1			3			TOTAL SHEETS
2			4			30

DRAWN BY: W. B. ALLEN DATE: 5/09
CHECKED BY: L. K. AUSTIN DATE: 6/09

10/7/2010 7:24:18 AM R:\Structures\BK510_SD_B2_01.dgn

BAR TYPES

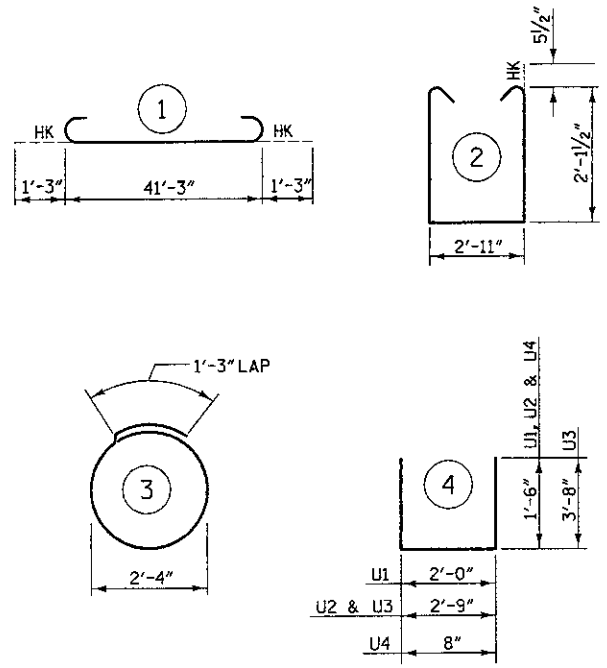

ALL BAR DIMENSIONS ARE OUT TO OUT

BILL OF MATERIAL

FOR BENT 2

BAR	NO.	SIZE	TYPE	LENGTH	WEIGHT
B1	5	#9	1	43'-9"	744
B2	4	#10	STR	41'-3"	710
B3	8	#4	STR	21'-10"	117
B4	10	#4	STR	2'-11"	19
B5	2	#6	STR	41'-3"	124
B6	4	#4	STR	2'-11"	8
D1	52	#6	STR	1'-6"	117
S1	34	#5	2	8'-1"	287
S2	14	#4	3	8'-7"	80
U1	8	#4	4	5'-0"	27
U2	4	#4	4	5'-9"	15
U3	2	#9	4	10'-1"	69
U4	8	#4	4	3'-8"	20

TOTAL REINFORCING STEEL = 2337 lbs.

CLASS "A" CONCRETE - CU. YARDS		12.2
	POUR 1	12.1 cu. yds.
	POUR 2	0.2 cu. yds.
	TOTAL	12.3 cu. yds.

18" GALVANIZED STEEL PIPE PILES
7 PILES REQUIRED - LIN. FEET 350

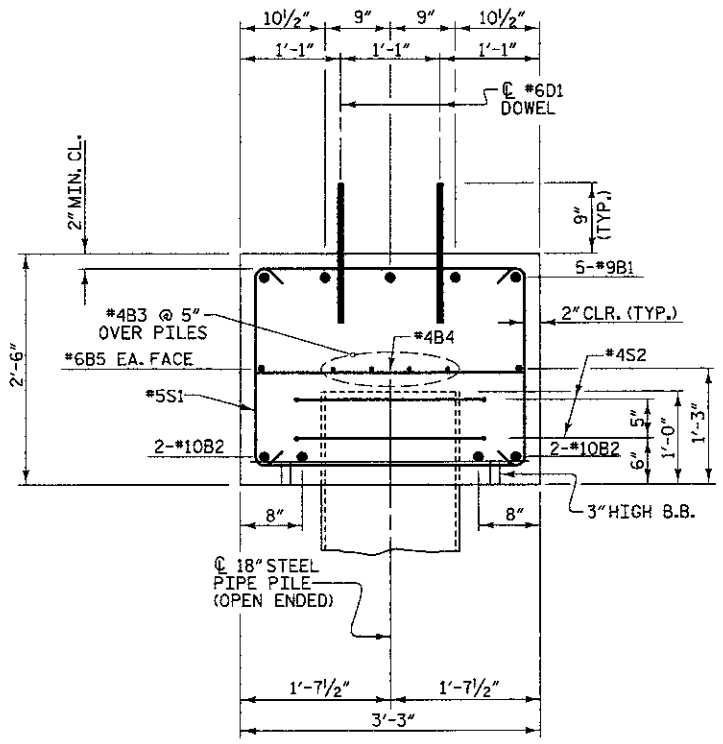

SECTION A-A

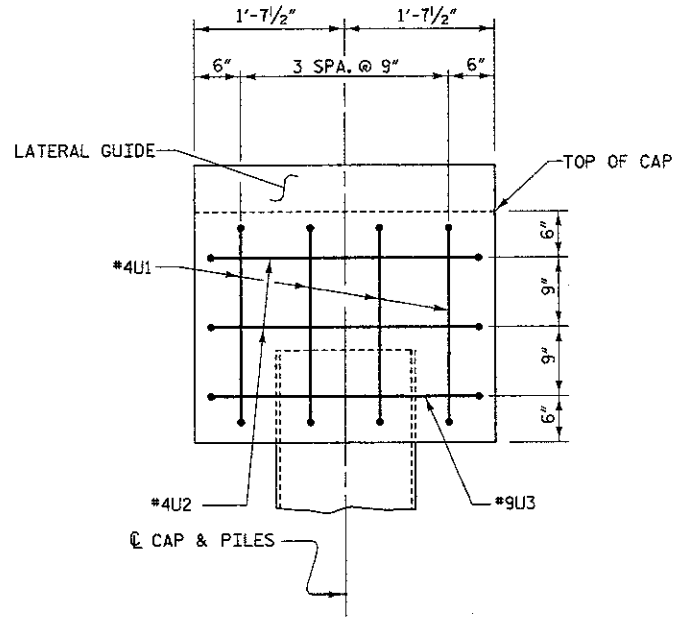

END VIEW

(TYPICAL BOTH ENDS)

PROJECT NO. 42561

CUMBERLAND COUNTY

STATION: 15+95.04 -L-

REPLACES BRIDGE NO. 11 SHEET 2 OF 2

STATE OF NORTH CAROLINA
DEPARTMENT OF TRANSPORTATION
RALEIGH

SUBSTRUCTURE BENT 2

35'-10" CLEAR ROADWAY - 90° SKEW

NORTH CAROLINA PROFESSIONAL SEAL 19661 ENGINEER L. KEVIN AUSTIN 10/7/10

PLANS PREPARED BY:
MULKEY ENGINEERS & CONSULTANTS
PO Box 33127 Raleigh, N.C. 27636 (919) 851-1912 (919) 851-1918 (FAX) WWW.MULKEYINC.COM

REVISIONS						SHEET NO.
NO.	BY:	DATE:	NO.	BY:	DATE:	20
1			3			TOTAL SHEETS
2			4			30

DRAWN BY : W. B. ALLEN DATE : 5/09
CHECKED BY : L. K. AUSTIN DATE : 6/09

10/7/2010 7:24:59 AM R:\Structures\BK5B0_SD_B2_02.dgn

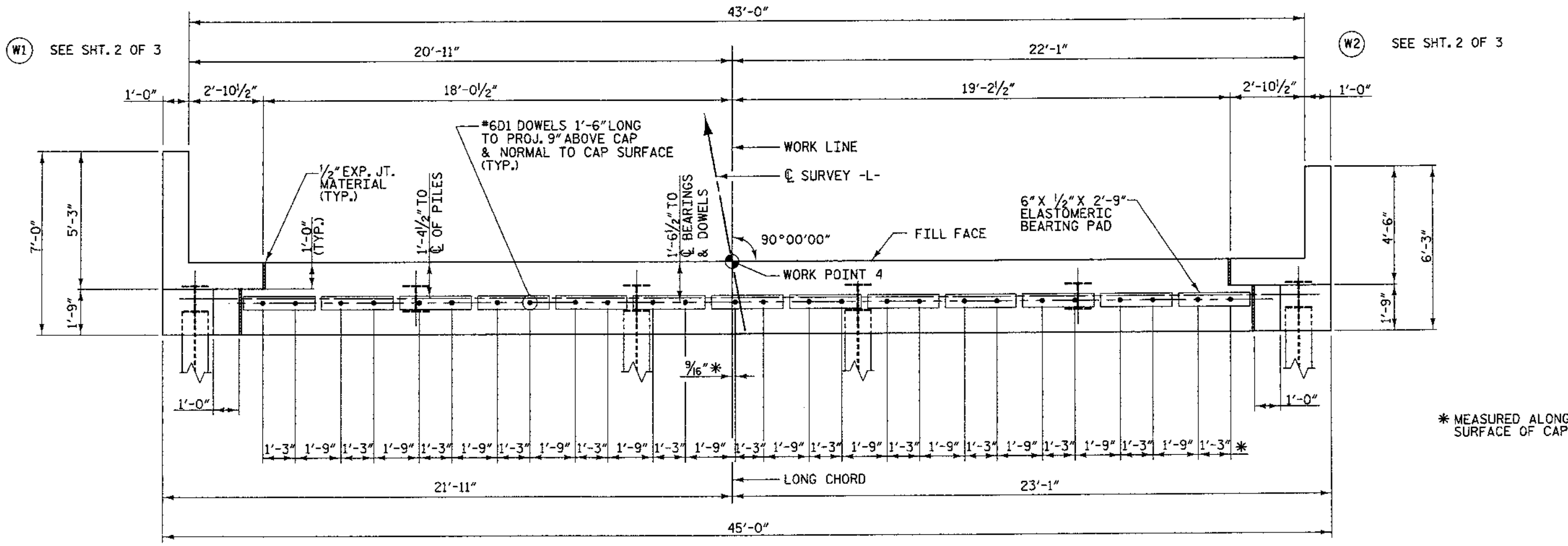

PLAN

* MEASURED ALONG SURFACE OF CAP

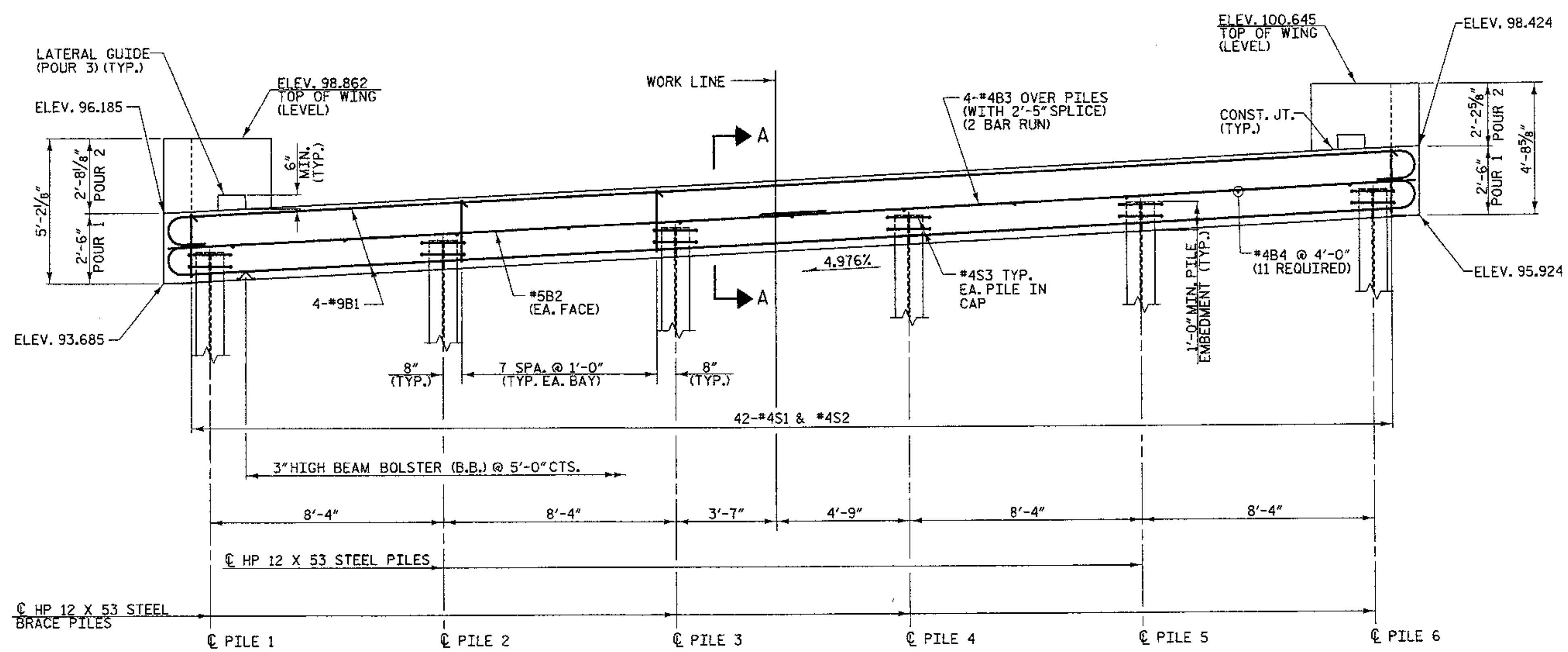

ELEVATION

NOTES

STIRRUPS IN CAP MAY BE SHIFTED AS NECESSARY TO CLEAR #6D1 DOWELS.

FOR LATERAL GUIDE DETAIL, SEE END BENT 1 SHEET 3 OF 3.

FOR PILE SPLICE DETAIL, SEE END BENT 1. SHEET 3 OF 3

FOR DOWEL DETAIL, SEE END BENT 1 SHEET 3 OF 3.

PILE CUT-OFF ELEVATIONS

PILE NO.	ELEV.
1	94.793
2	95.207
3	95.622
4	96.037
5	96.451
6	96.866

PROJECT NO. 42561

CUMBERLAND COUNTY

STATION: 15+95.04 -L-

REPLACES BRIDGE NO. 11 SHEET 1 OF 3

STATE OF NORTH CAROLINA
DEPARTMENT OF TRANSPORTATION
RALEIGH

SUBSTRUCTURE END BENT 2

35'-10" CLEAR ROADWAY - 90° SKEW

NORTH CAROLINA PROFESSIONAL SEAL 19661 ENGINEER L. KEVIN AUSTIN 10/7/10

PLANS PREPARED BY: MULKEY ENGINEERS & CONSULTANTS

REVISIONS						SHEET NO.
NO.	BY:	DATE:	NO.	BY:	DATE:	21
1			3			TOTAL SHEETS
2			4			30

DRAWN BY : W. B. ALLEN DATE : 5/09
CHECKED BY : L. K. AUSTIN DATE : 6/09

10/7/2010 7:25:52 AM R:\Structures\BK5110_SD_E2_01.dgn

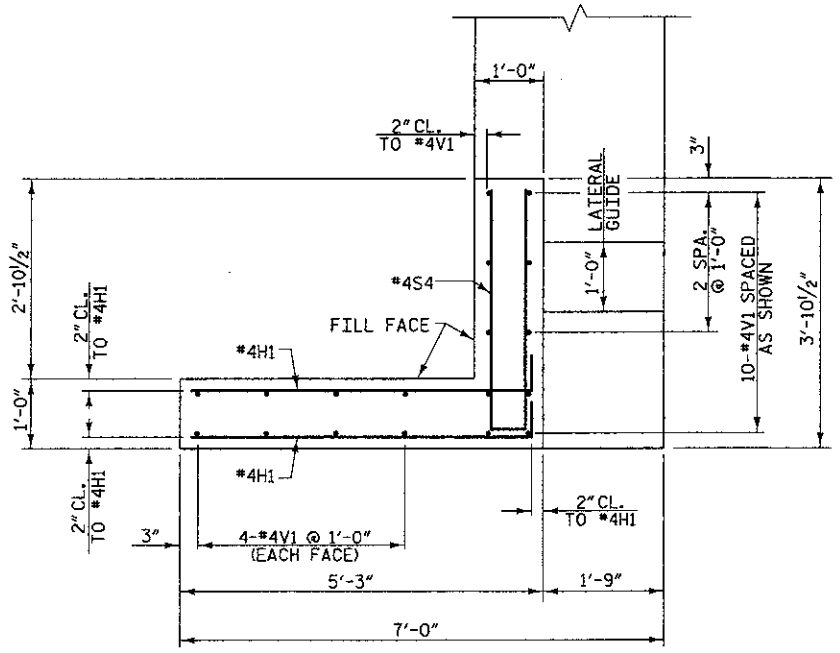

W1 PLAN OF LEFT WING

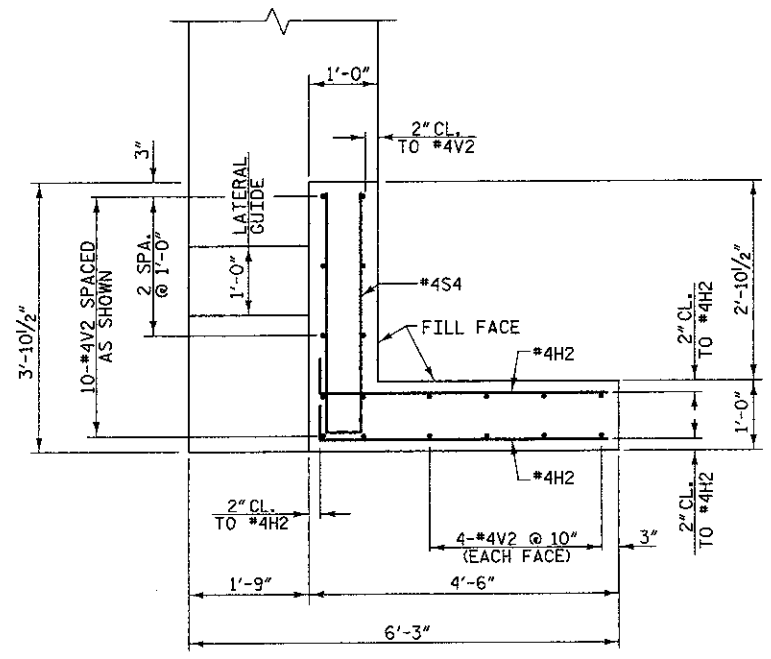

W2 PLAN OF RIGHT WING

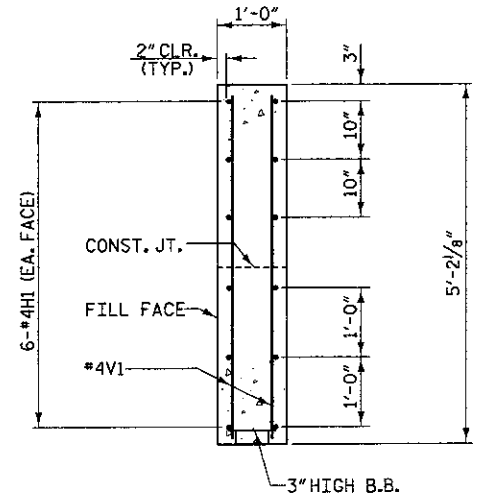

SECTION X-X

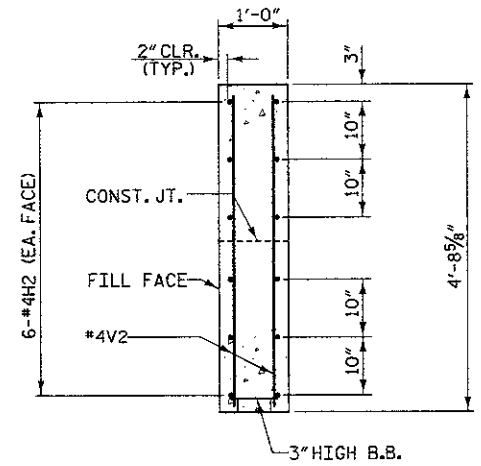

SECTION Y-Y

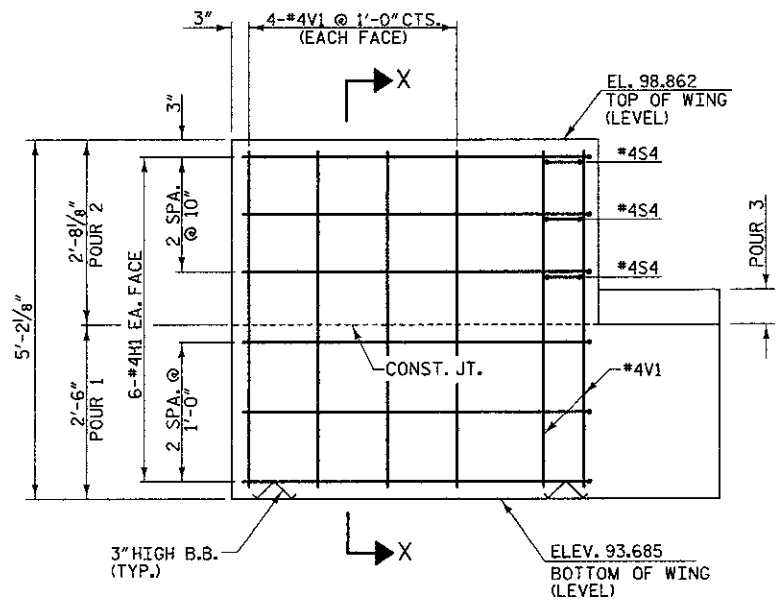

W1 ELEVATION OF LEFT WING

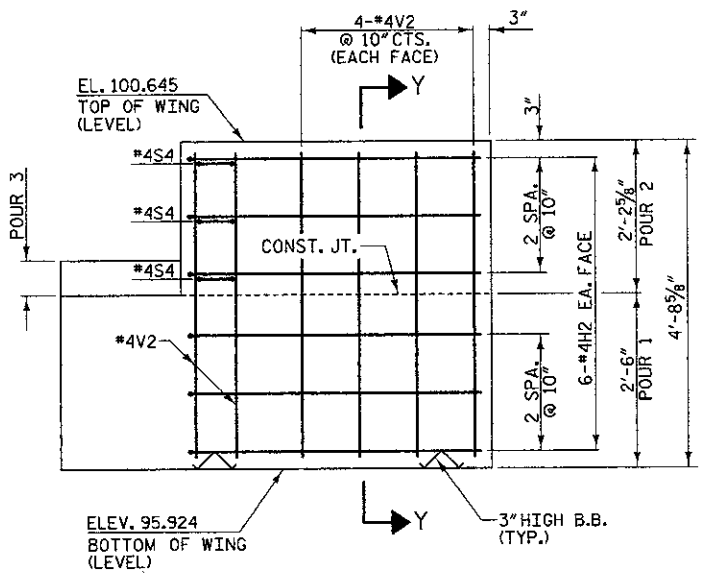

W2 ELEVATION OF RIGHT WING

PROJECT NO. 42561

CUMBERLAND COUNTY

STATION: 15+95.04 -L-

REPLACES BRIDGE NO. 11 SHEET 2 OF 3

STATE OF NORTH CAROLINA
DEPARTMENT OF TRANSPORTATION
RALEIGH

SUBSTRUCTURE END BENT 2

35'-10" CLEAR ROADWAY - 90° SKEW

NORTH CAROLINA PROFESSIONAL ENGINEER 19661 L. KEVIN AUSTIN 10/7/10

PLANS PREPARED BY:
MULKEY ENGINEERS & CONSULTANTS
PO Box 33127
Raleigh, N.C. 27636
(919) 851-1912
(919) 851-1918 (FAX)
WWW.MULKEYINC.COM

REVISIONS						SHEET NO.
NO.	BY:	DATE:	NO.	BY:	DATE:	22
1			3			TOTAL SHEETS
2			4			30

DRAWN BY : W. B. ALLEN DATE : 5/09
CHECKED BY : L. K. AUSTIN DATE : 6/09

10/7/2010 7:26:19 AM R:\Structures\BK5110_SD_E2_02.dgn

BAR TYPES

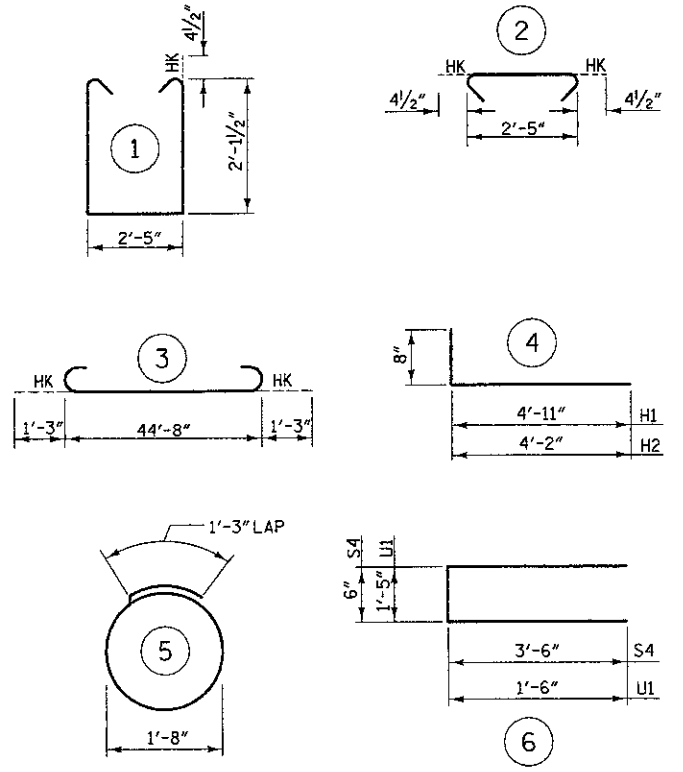

ALL BAR DIMENSIONS ARE OUT TO OUT

BILL OF MATERIAL

FOR END BENT 2

BAR	NO.	SIZE	TYPE	LENGTH	WEIGHT
B1	8	#9	3	47'-2"	1283
B2	2	#5	STR	44'-8"	93
B3	8	#4	STR	23'-7"	126
B4	11	#4	STR	2'-5"	18
D1	26	#6	STR	1'-6"	59
H1	12	#4	4	5'-7"	45
H2	12	#4	4	4'-10"	39
S1	42	#4	1	7'-5"	208
S2	42	#4	2	3'-2"	89
S3	12	#4	5	6'-6"	52
S4	6	#4	6	7'-6"	30
U1	4	#4	6	4'-5"	12
V1	18	#4	STR	4'-10"	58
V2	18	#4	STR	4'-4"	52

TOTAL REINFORCING STEEL =	2164 lbs.
CLASS "A" CONCRETE - CU. YARDS	
POUR 1	12.2 cu. yds.
POUR 2	1.4 cu. yds.
POUR 3	0.1 cu. yds.
TOTAL	13.7 cu. yds.
HP 12 X 53 GALVANIZED STEEL PILES	
6 PILES REQUIRED - LIN. FEET	360

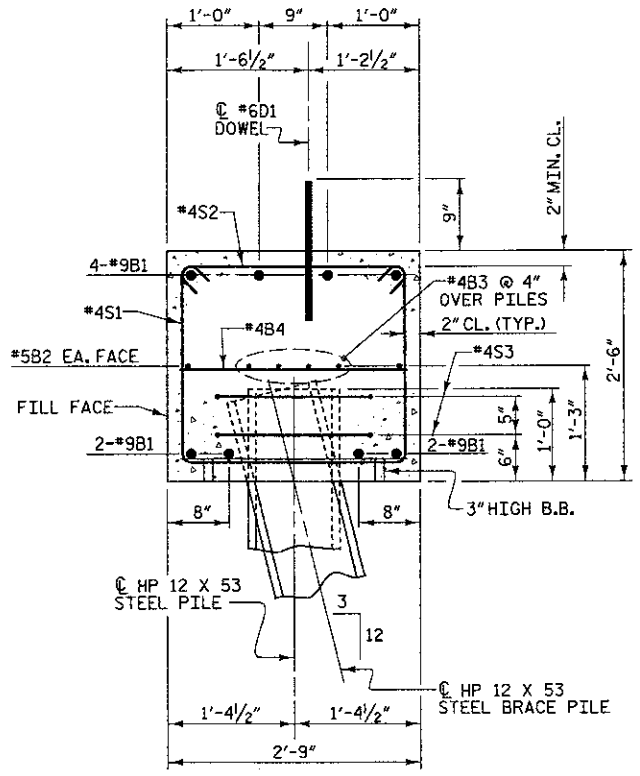

SECTION A-A

PROJECT NO. 42561

CUMBERLAND COUNTY

STATION: 15+95.04 -L-

REPLACES BRIDGE NO. 11 SHEET 3 OF 3

NORTH CAROLINA PROFESSIONAL ENGINEER SEAL 19661 L. KEVIN AUSTIN 10/1/10

PLANS PREPARED BY:

MULKEY ENGINEERS & CONSULTANTS
PO BOX 32157
RALEIGH, N.C. 27636
(919) 851-1515
(919) 851-1516 (FAX)
WWW.MULKEYINC.COM

STATE OF NORTH CAROLINA
DEPARTMENT OF TRANSPORTATION
RALEIGH

SUBSTRUCTURE END BENT 2

35'-10" CLEAR ROADWAY - 90° SKEW

REVISIONS						SHEET NO.
NO.	BY:	DATE:	NO.	BY:	DATE:	23
1			3			TOTAL SHEETS
2			4			30

DRAWN BY : W. B. ALLEN DATE : 5/09
CHECKED BY : L. K. AUSTIN DATE : 6/09

10/7/2010 7:27:33 AM R:\Structures\B5610_SD_12_03.dgn

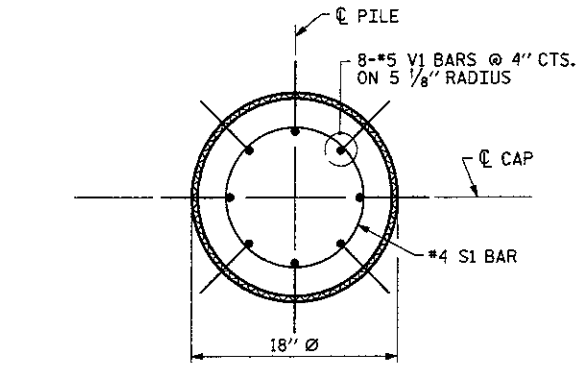

PLAN

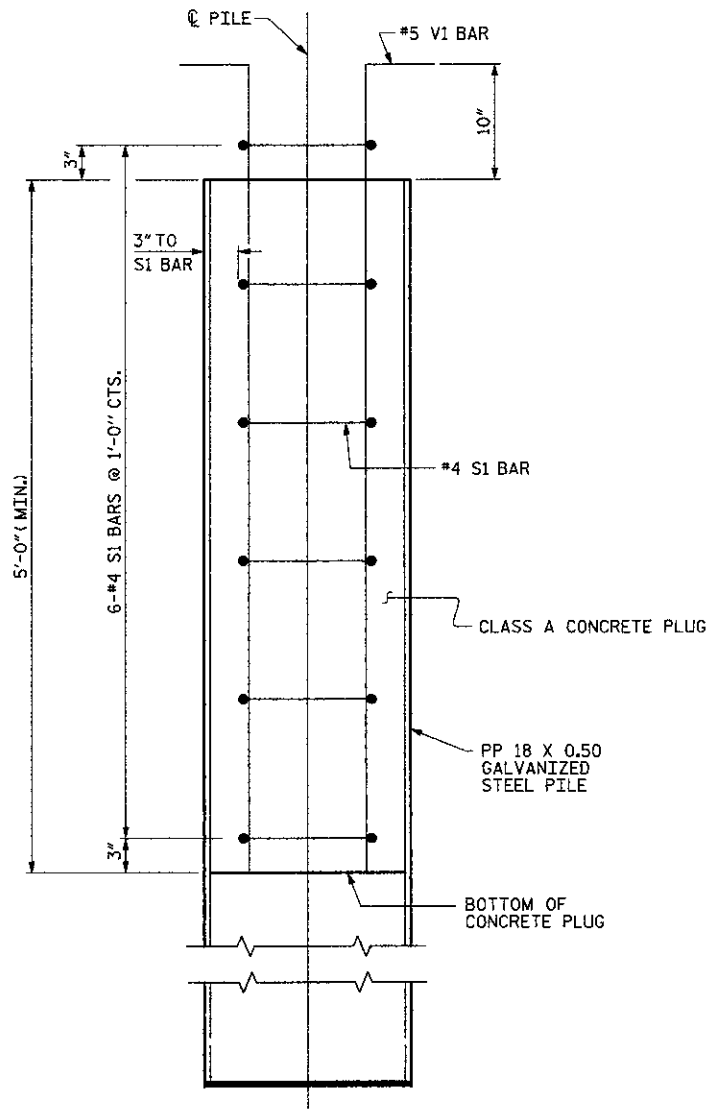

ELEVATION

PP 18 X 0.50 GALVANIZED STEEL PILE

(OPEN END)

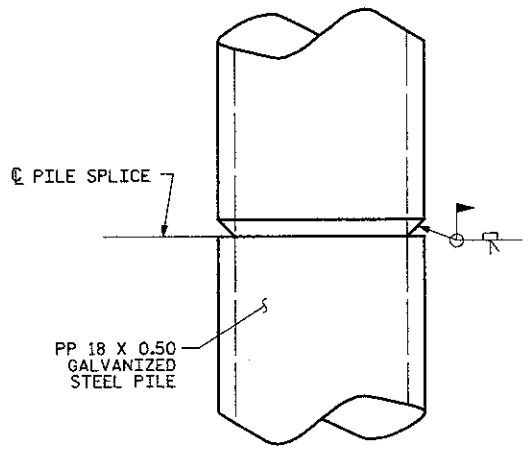

PIPE PILE SPLICE DETAIL

NOTES

PIPE PILES SHALL BE IN ACCORDANCE WITH SECTION 1084 OF THE STANDARD SPECIFICATIONS.

GALVANIZE STEEL PIPE PILES IN ACCORDANCE WITH SECTION 1076 OF THE STANDARD SPECIFICATIONS UNLESS METALLIZING IS REQUIRED. GALVANIZING OR METALLIZING PIPE PILE PLATES IS NOT REQUIRED.

PIPE PILE PLATES, IF REQUIRED, SHALL BE IN ACCORDANCE WITH SECTION 450 OF THE STANDARD SPECIFICATIONS.

REMOVE AND REPLACE OR REPAIR TO THE SATISFACTION OF THE ENGINEER PILES THAT ARE DAMAGED, DEFORMED OR COLLAPSED DURING INSTALLATION OR DRIVING.

PILE SPLICES SHALL BE IN ACCORDANCE WITH THE STANDARD SPECIFICATIONS AND AWS D1.1.

FOR CLOSED END PIPE PILES, REMOVE ALL SOIL AND WATER FROM INSIDE THE PILES JUST PRIOR TO PLACING REINFORCING STEEL AND CONCRETE FOR THE CONCRETE PLUG.

FOR OPEN END PIPE PILES, REMOVE ENOUGH SOIL AND WATER FROM INSIDE THE PILES TO CONSTRUCT THE CONCRETE PLUG WITHOUT FOULING THE CONCRETE.

FORM THE CONCRETE PLUG SUCH THAT THE REINFORCING STEEL OR CONCRETE DOES NOT MOVE AND THE CLEARANCE FROM THE REINFORCING STEEL TO THE INSIDE OF THE PILE IS MAINTAINED AFTER CONCRETE PLACEMENT. DO NOT PLACE CONCRETE IN THE BENT CAP UNTIL THE CONCRETE PLUG HAS ATTAINED A MINIMUM COMPRESSIVE STRENGTH OF 1500 PSI.

THE REINFORCING STEEL, CLASS A CONCRETE, AND GALVANIZING ARE CONSIDERED INCIDENTAL TO THE CONTRACT UNIT PRICE BID PER LINEAR FOOT FOR PP 18 X 0.50 GALVANIZED STEEL PILES.

BILL OF MATERIAL FOR ONE PP 18 X 0.50 GALVANIZED STEEL PILE

BAR	NO.	SIZE	TYPE	LENGTH	WEIGHT
S1	6	#4	1	4'-5"	18
V1	8	#5	2	6'-8"	56
REINFORCING STEEL =					74 lbs
CLASS A CONCRETE					
5'-0" MINIMUM PLUG					0.3 CY

BAR TYPES

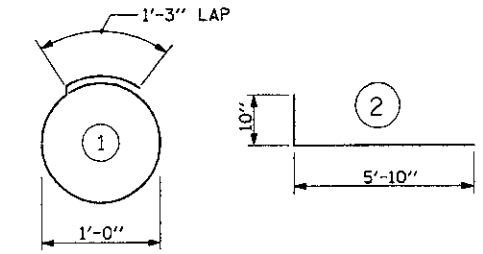

ALL BAR DIMENSIONS ARE OUT TO OUT.

PROJECT NO. 42561

CUMBERLAND COUNTY

STATION: 15+95.04 -L-

STATE OF NORTH CAROLINA
DEPARTMENT OF TRANSPORTATION
RALEIGH

STANDARD

18" STEEL PIPE PILE

STD. NO. SPP3

REVISIONS						SHEET NO.
NO.	BY:	DATE:	NO.	BY:	DATE:	24
1			3			TOTAL SHEETS
2			4			30

PLANS PREPARED BY:
MULKEY ENGINEERS & CONSULTANTS
PO BOX 33127
RALEIGH, NC 27636
(919) 851-1212 (FAX)
WWW.MULKEYINC.COM

THIS STANDARD DRAWING REVIEWED & ADOPTED FOR USE AT THE REFERENCED LOCATION BY THE UNDERSIGNED:

NORTH CAROLINA PROFESSIONAL SEAL 19661 ENGINEER L. KEVIN AUSTIN 10/7/20

ASSEMBLED BY :	W. B. ALLEN	DATE :	5/09
CHECKED BY :	L. K. AUSTIN	DATE :	6/09
DRAWN BY : RWW 1/01	REV. 5/7/03		RWW/JTE
CHECKED BY : LES 1/01	REV. 10/1/05		LBG/TLA
	REV. 5/1/06R		MAA/KMM

10/7/2020 10:56:57 AM R:\Structures\BK50.SD.PP.04.dgn

EROSION CONTROL PLAN

ROADSIDE ENVIRONMENTAL UNIT
DEPARTMENT OF TRANSPORTATION
DIVISION OF HIGHWAYS
RALEIGH, N.C.

2006 STANDARD SPECIFICATIONS

NOTES: ANY DEVIATION FROM OPTIONS GIVEN WILL REQUIRE PRIOR APPROVAL BY ENGINEER.

ADDITIONAL EROSION CONTROL DEVICES MAY NEED TO BE INSTALLED AS DIRECTED BY THE ENGINEER.

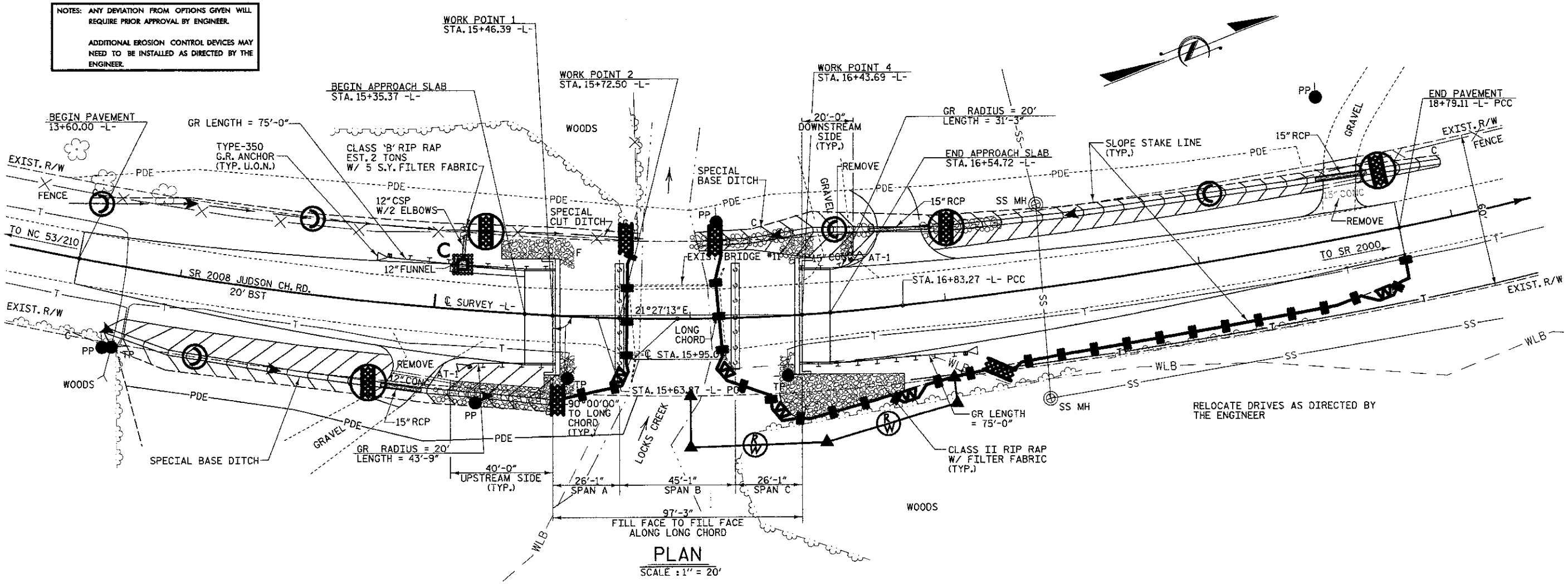

PLAN
SCALE : 1" = 20'

Std. #	Description	Symbol
1605.01	Temporary Silt Fence	
1606.01	Special Sediment Control Fence	
1607.01	Gravel Construction Entrance	
1622.01	Temporary Berms and Slope Drains	
1632.03	Rock Inlet Sediment Trap Type C	
1633.01	Temporary Rock Silt Check Type-A	
	Temporary Rock Silt Check Type-A with Matting and Polyacrylamide (PAM)	
	Temporary Rock Silt Check Type-B	
	Wattle with Polyacrylamide (PAM)	

PROJECT NO. 42561
CUMBERLAND COUNTY
STATION: 15+95.04 -L-

REPLACES BRIDGE NO. 11 BK-5110

STATE OF NORTH CAROLINA
DEPARTMENT OF TRANSPORTATION
RALEIGH

BRIDGE ON SR 2008 OVER
LOCKS CREEK BETWEEN
NC 53/210 & SR 2000

35'-10" CLEAR ROADWAY - 90°SKEW

REVISIONS						SHEET NO.
NO.	BY:	DATE:	NO.	BY:	DATE:	25
1			3			TOTAL SHEETS
2			4			30

10/8/2010 10:38:37 AM R:\Structures\BK5110_SS_EC_DW.dgn

ROADSIDE ENVIRONMENTAL UNIT
DEPARTMENT OF TRANSPORTATION
DIVISION OF HIGHWAYS
RALEIGH, N.C.

2006 STANDARD SPECIFICATIONS

NOTES: ANY DEVIATION FROM OPTIONS GIVEN WILL REQUIRE PRIOR APPROVAL BY ENGINEER.

ADDITIONAL EROSION CONTROL DEVICES MAY NEED TO BE INSTALLED AS DIRECTED BY THE ENGINEER.

TEMPORARY ROCK SILT CHECK TYPE 'B' DETAIL

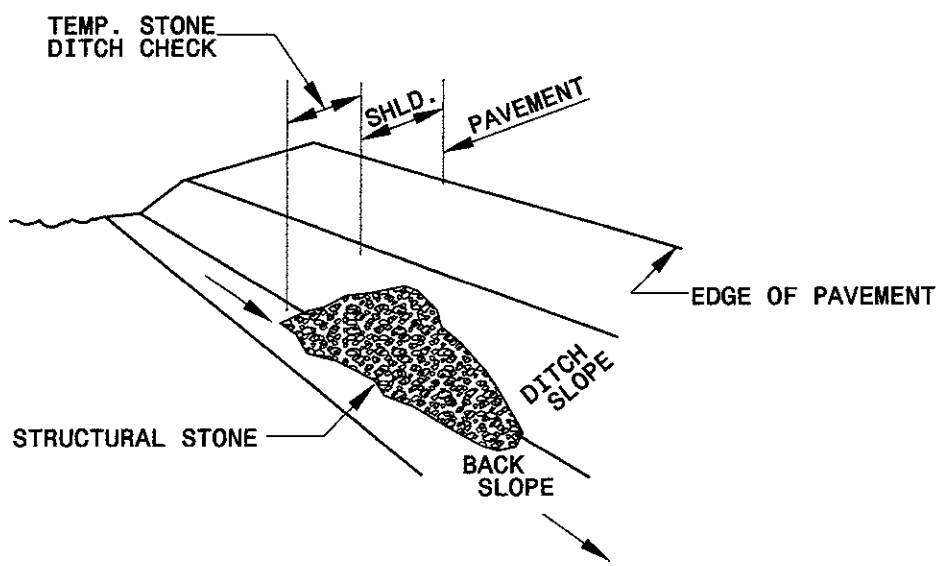

ISOMETRIC VIEW

NOTES:

USE CLASS 'B' EROSION CONTROL STONE FOR STRUCTURAL STONE.

THE ENGINEER MAY DIRECT THE OPTION OF CLASS "A" STONE FOR SITES HAVING LESS THAN ONE (1) ACRE DRAINAGE AREA AND A DITCH GRADE LESS THAN 3%.

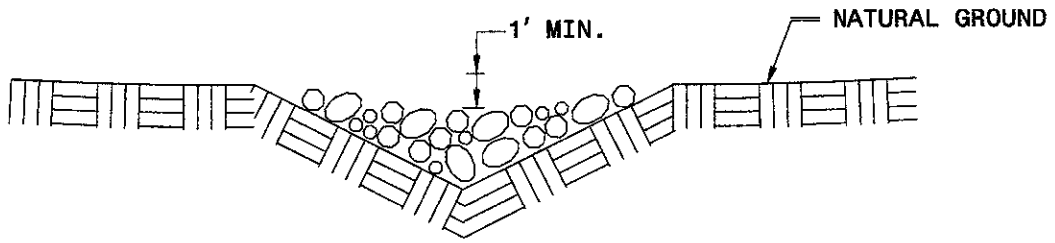

CROSS SECTION VEE DITCH

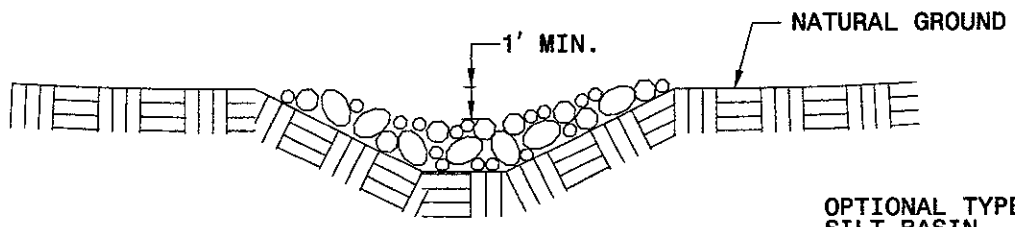

CROSS SECTION TRAPEZOIDAL DITCH

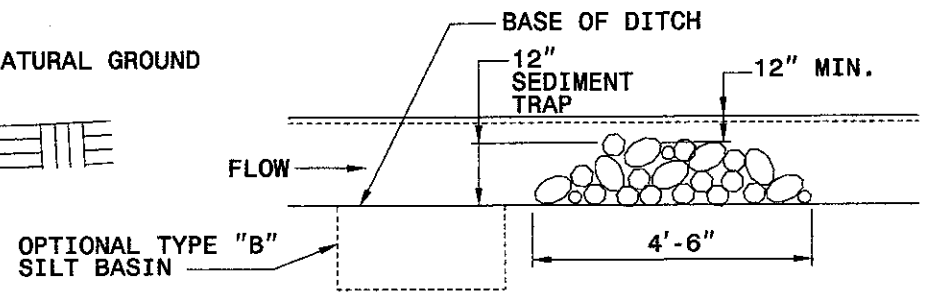

ELEVATION VIEW

PROJECT NO. 42561
CUMBERLAND COUNTY
STATION: 15+95.04 -L-

REPLACES BRIDGE NO. 11 BK-5110

STATE OF NORTH CAROLINA
DEPARTMENT OF TRANSPORTATION
RALEIGH

BRIDGE ON SR 2008 OVER LOCKS CREEK BETWEEN NC 53/210 & SR 2000

REVISIONS						SHEET NO.
NO.	BY:	DATE:	NO.	BY:	DATE:	26
1			3			TOTAL SHEETS
2			4			30

10/7/2010 7:28:48 AM R:\Structures\BK5110_SD_EC_01.dgn

WATTLE WITH POLYACRYLAMIDE (PAM) DETAIL

ROADSIDE ENVIRONMENTAL UNIT
DEPARTMENT OF TRANSPORTATION
DIVISION OF HIGHWAYS
RALEIGH, N.C.

2006 STANDARD SPECIFICATIONS

NOTES: ANY DEVIATION FROM OPTIONS GIVEN WILL REQUIRE PRIOR APPROVAL BY ENGINEER.

ADDITIONAL EROSION CONTROL DEVICES MAY NEED TO BE INSTALLED AS DIRECTED BY THE ENGINEER.

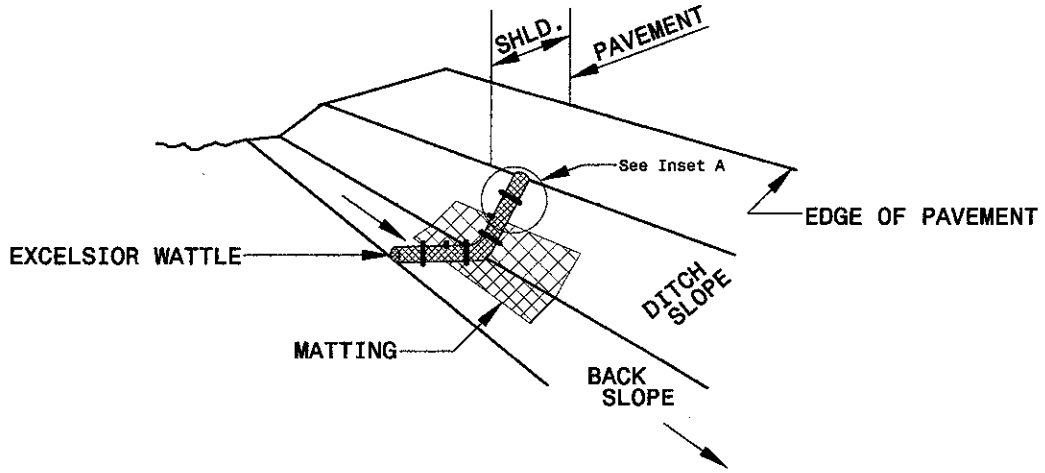

ISOMETRIC VIEW

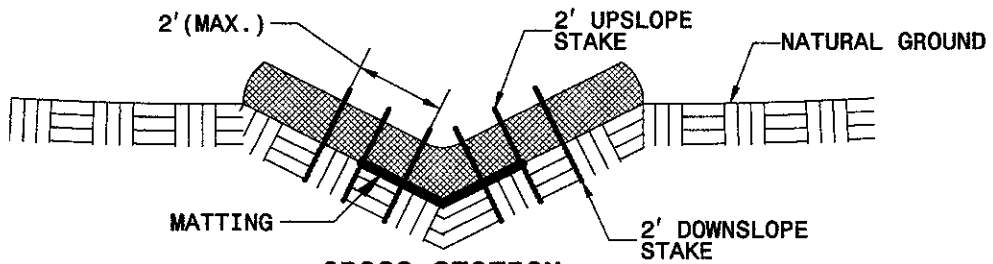

CROSS SECTION
VEE DITCH

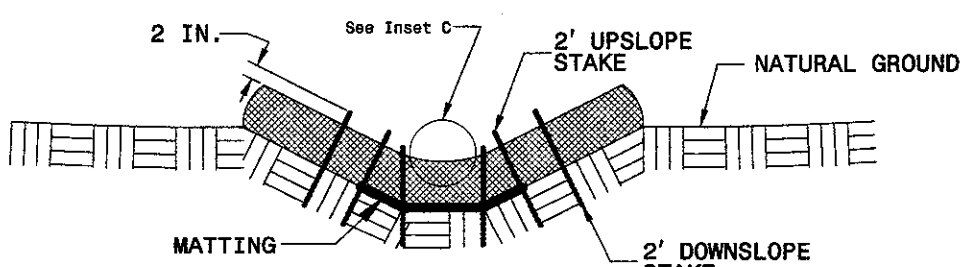

CROSS SECTION
TRAPEZOIDAL DITCH

NOTES:

USE MINIMUM 12 IN. DIAMETER EXCELSIOR WATTLE.

USE 2 FT. WOODEN STAKES WITH A 2 IN. BY 2 IN. NOMINAL CROSS SECTION.

ONLY INSTALL WATTLE(S) TO A HEIGHT IN DITCH SO FLOW WILL NOT WASH AROUND WATTLE AND SCOUR DITCH SLOPES AND AS DIRECTED.

INSTALL A MINIMUM OF 2 UPSLOPE STAKES AND 4 DOWNSLOPE STAKES AT AN ANGLE TO WEDGE WATTLE TO BOTTOM OF DITCH.

PROVIDE STAPLES MADE OF 0.125 IN. DIAMETER STEEL WIRE FORMED INTO A U SHAPE NOT LESS THAN 12" IN LENGTH.

INSTALL STAPLES APPROXIMATELY EVERY 1 LINEAR FOOT ON BOTH SIDES OF WATTLE AND AT EACH END TO SECURE IT TO THE SOIL.

INSTALL MATTING IN ACCORDANCE WITH SECTION 1631 OF THE STANDARD SPECIFICATIONS.

PRIOR TO POLYACRYLAMIDE (PAM) APPLICATION, OBTAIN A SOIL SAMPLE FROM PROJECT LOCATION, AND FROM OFFSITE MATERIAL, AND ANALYZE FOR APPROPRIATE PAM FLOCCULANT TO BE APPLIED TO EACH WATTLE.

INITIALLY APPLY 2 OUNCES OF ANIONIC OR NEUTRALLY CHARGED PAM OVER WATTLE WHERE WATER WILL FLOW AND 1 OUNCE OF PAM ON MATTING ON EACH SIDE OF WATTLE. REAPPLY PAM AFTER EVERY RAINFALL EVENT THAT IS EQUAL TO OR EXCEEDS 0.50 IN.

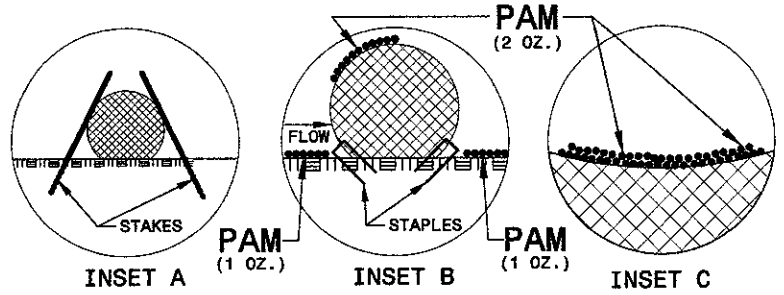

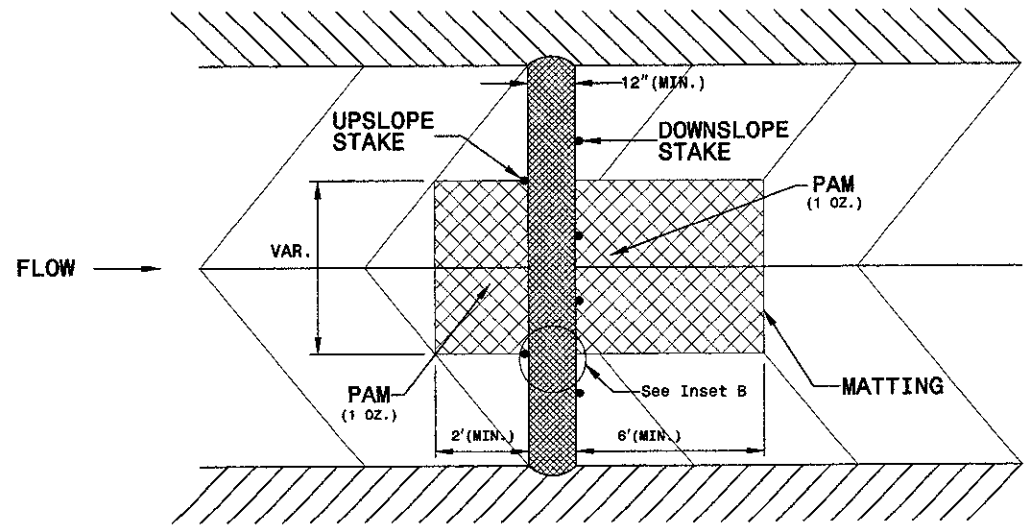

TOP VIEW

PROJECT NO. 42561
CUMBERLAND COUNTY
STATION: 15+95.04 -L-

REPLACES BRIDGE NO. 11 BK-5110

STATE OF NORTH CAROLINA
DEPARTMENT OF TRANSPORTATION
RALEIGH

BRIDGE ON SR 2008 OVER LOCKS CREEK BETWEEN NC 53/210 & SR 2000

REVISIONS						SHEET NO.
NO.	BY:	DATE:	NO.	BY:	DATE:	27
1			3			TOTAL SHEETS
2			4			30

10/7/2010 7:28:57 AM R:\Structures\BKS110_SD_EC_01.dgn

TEMPORARY ROCK SILT CHECK TYPE 'A' WITH EXCELSIOR MATTING AND POLYACRYLAMIDE (PAM)

ROADSIDE ENVIRONMENTAL UNIT
DEPARTMENT OF TRANSPORTATION
DIVISION OF HIGHWAYS
RALEIGH, N.C.

2006 STANDARD SPECIFICATIONS

NOTES: ANY DEVIATION FROM OPTIONS GIVEN WILL REQUIRE PRIOR APPROVAL BY ENGINEER.

ADDITIONAL EROSION CONTROL DEVICES MAY NEED TO BE INSTALLED AS DIRECTED BY THE ENGINEER.

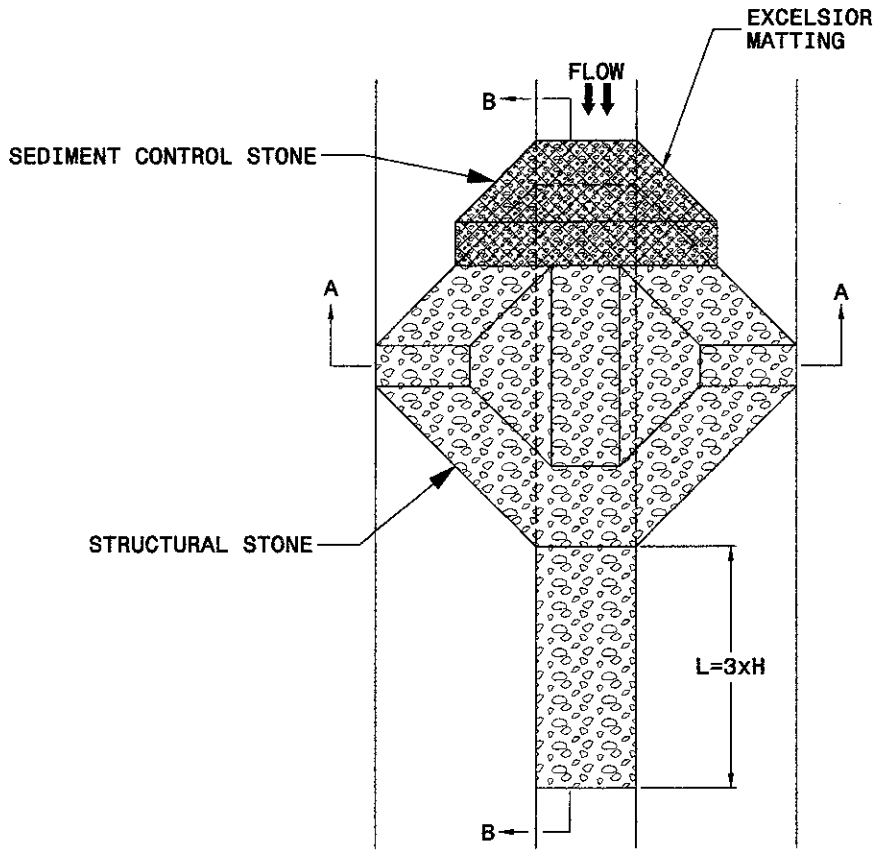

PLAN

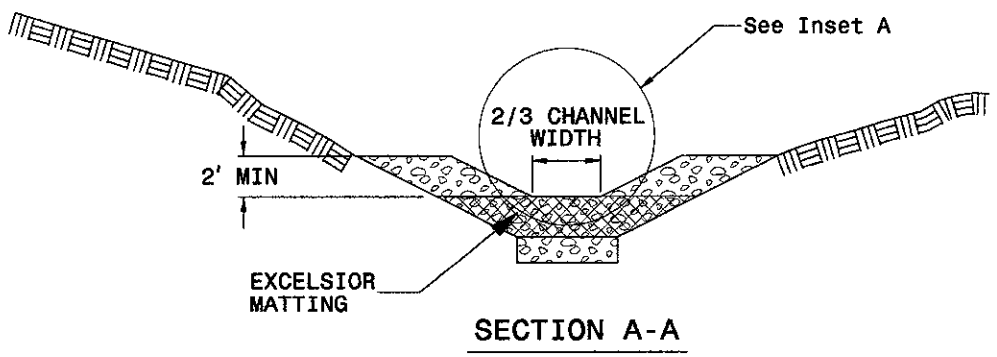

SECTION A-A

NOTES

USE EXCELSIOR FOR MATTING MATERIAL AND ANCHOR MATTING SECTION AT TOP AND BOTTOM WITH CLASS B STONE.

PRIOR TO POLYACRYLAMIDE (PAM) APPLICATION, OBTAIN A SOIL SAMPLE FROM PROJECT LOCATION, AND FROM OFFSITE MATERIAL, AND ANALYZE FOR APPROPRIATE PAM FLOCCULANT TO BE APPLIED TO EACH ROCK SILT CHECK.

INITIALLY APPLY 3.5 OUNCES OF POLYACRYLAMIDE (PAM) TO TOP OF MATTING SECTION AND AFTER EVERY RAINFALL EVENT THAT EQUALS OR EXCEEDS 0.50 INCHES.

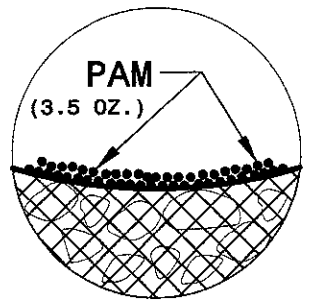

INSET A

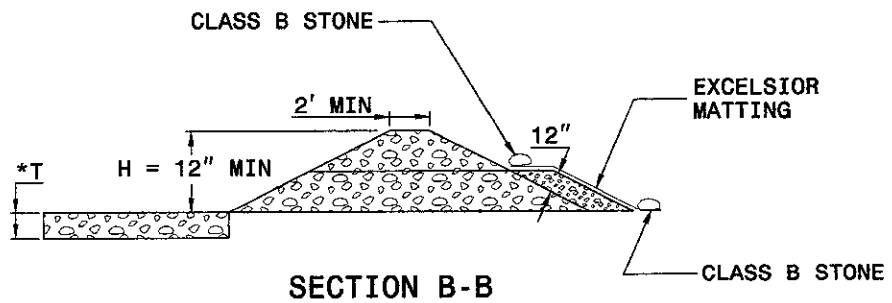

SECTION B-B

*T = 12" MIN., 18" MAX.

NOT TO SCALE

PROJECT NO. 42561
CUMBERLAND COUNTY
STATION: 15+95.04 -L-

REPLACES BRIDGE NO. 11 BK-5110

STATE OF NORTH CAROLINA
DEPARTMENT OF TRANSPORTATION
RALEIGH

BRIDGE ON SR 2008 OVER LOCKS CREEK BETWEEN NC 53/210 & SR 2000

REVISIONS						SHEET NO.
NO.	BY:	DATE:	NO.	BY:	DATE:	28
1			3			TOTAL SHEETS
2			4			30

10/7/2020 7:29:05 AM R:\Structures\BK5110_SD_EC_04.dgn

MATTING INSTALLATION DETAIL

ROADSIDE ENVIRONMENTAL UNIT
DEPARTMENT OF TRANSPORTATION
DIVISION OF HIGHWAYS
RALEIGH, N.C.

2006 STANDARD SPECIFICATIONS

NOTES: ANY DEVIATION FROM OPTIONS GIVEN WILL REQUIRE PRIOR APPROVAL BY ENGINEER.

ADDITIONAL EROSION CONTROL DEVICES MAY NEED TO BE INSTALLED AS DIRECTED BY THE ENGINEER.

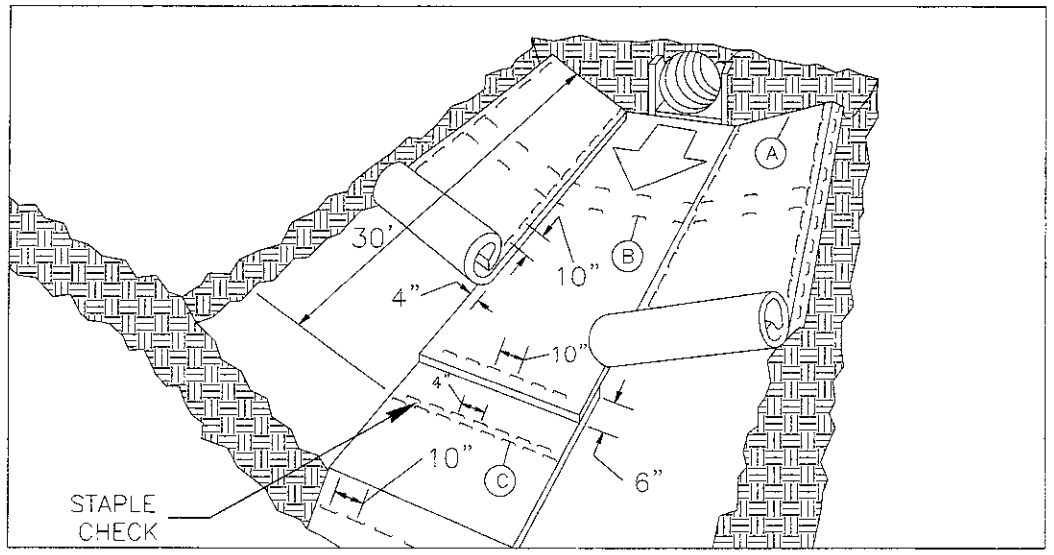

MATTING IN DITCHES

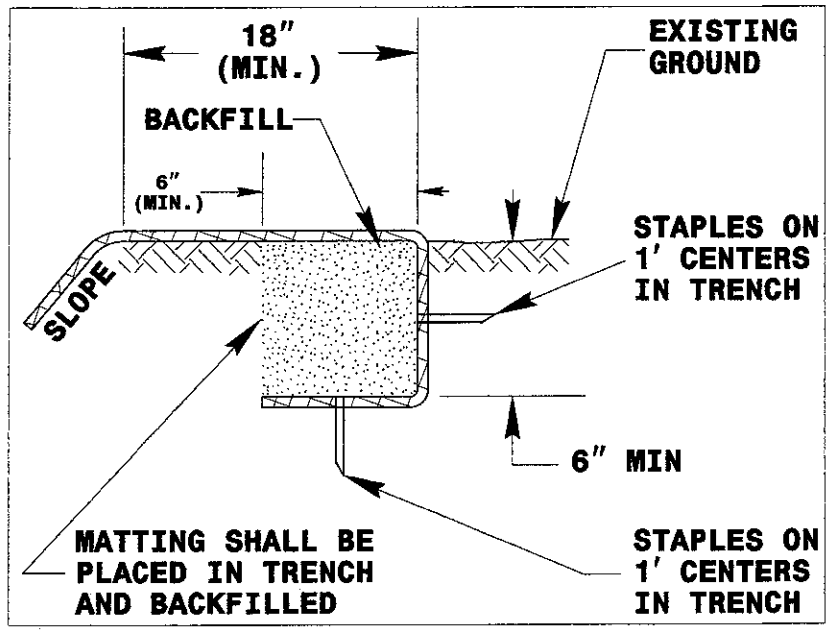

DIAGRAM (A)

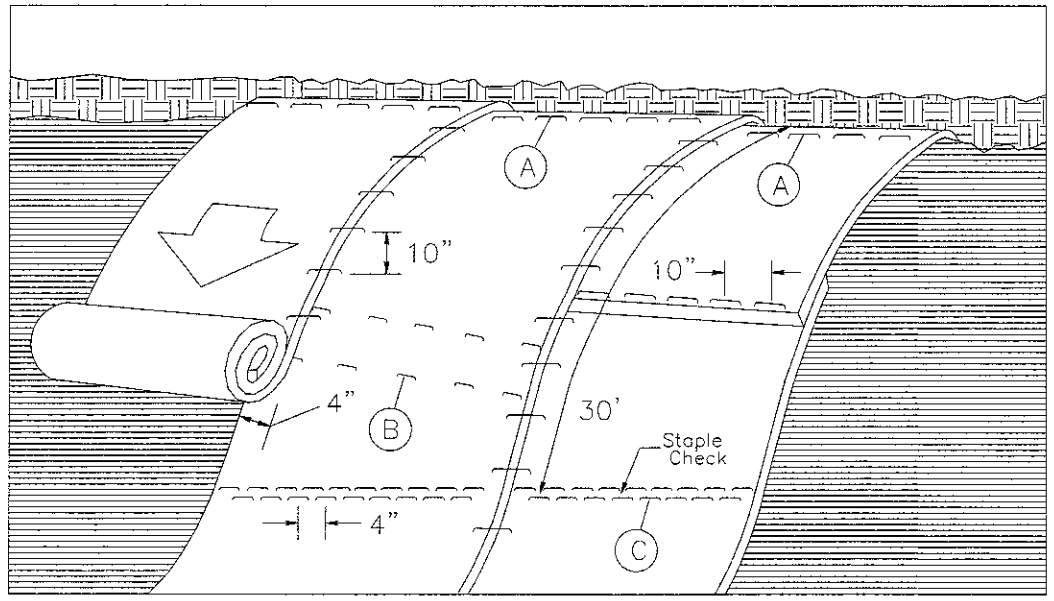

MATTING ON SLOPES

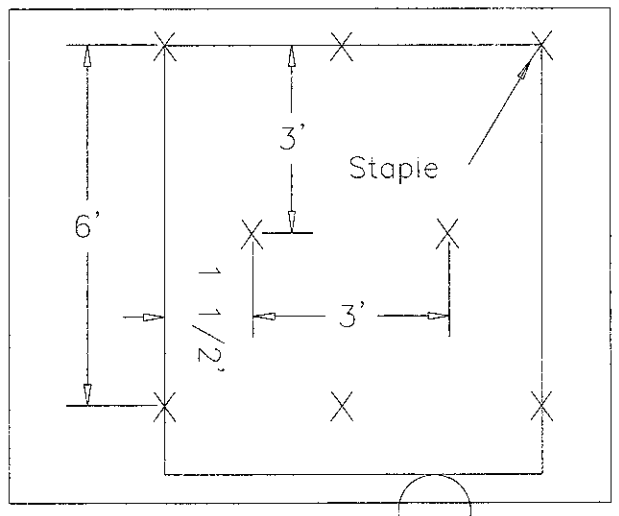

DIAGRAM (B)

Staple Check Pattern

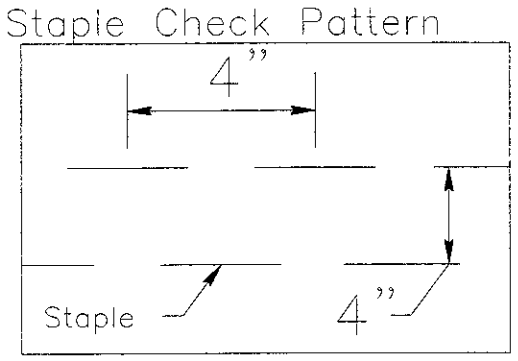

DIAGRAM (C)

NOTES:

THIS DETAIL APPLIES TO STRAW, EXCELSIOR, AND PERMANENT SOIL REINFORCEMENT MAT (PSRM) INSTALLATION.

STAPLES SHALL BE NO. 11 GAUGE STEEL WIRE FORMED INTO A "U" SHAPE WITH A MINIMUM THROAT WIDTH OF 1 INCH AND NOT LESS THAN 6 INCHES IN LENGTH.

NOT TO SCALE

PROJECT NO. 42561
CUMBERLAND COUNTY
STATION: 15+95.04 -L-

REPLACES BRIDGE NO. 11 BK-5110

STATE OF NORTH CAROLINA
DEPARTMENT OF TRANSPORTATION
RALEIGH

BRIDGE ON SR 2008 OVER LOCKS CREEK BETWEEN NC 53/210 & SR 2000

REVISIONS						SHEET NO.
NO.	BY:	DATE:	NO.	BY:	DATE:	29
1			3			TOTAL SHEETS
2			4			30

10/7/2010 7:29:13 AM R:\Structures\BK5110_SD_EC_01.dgn

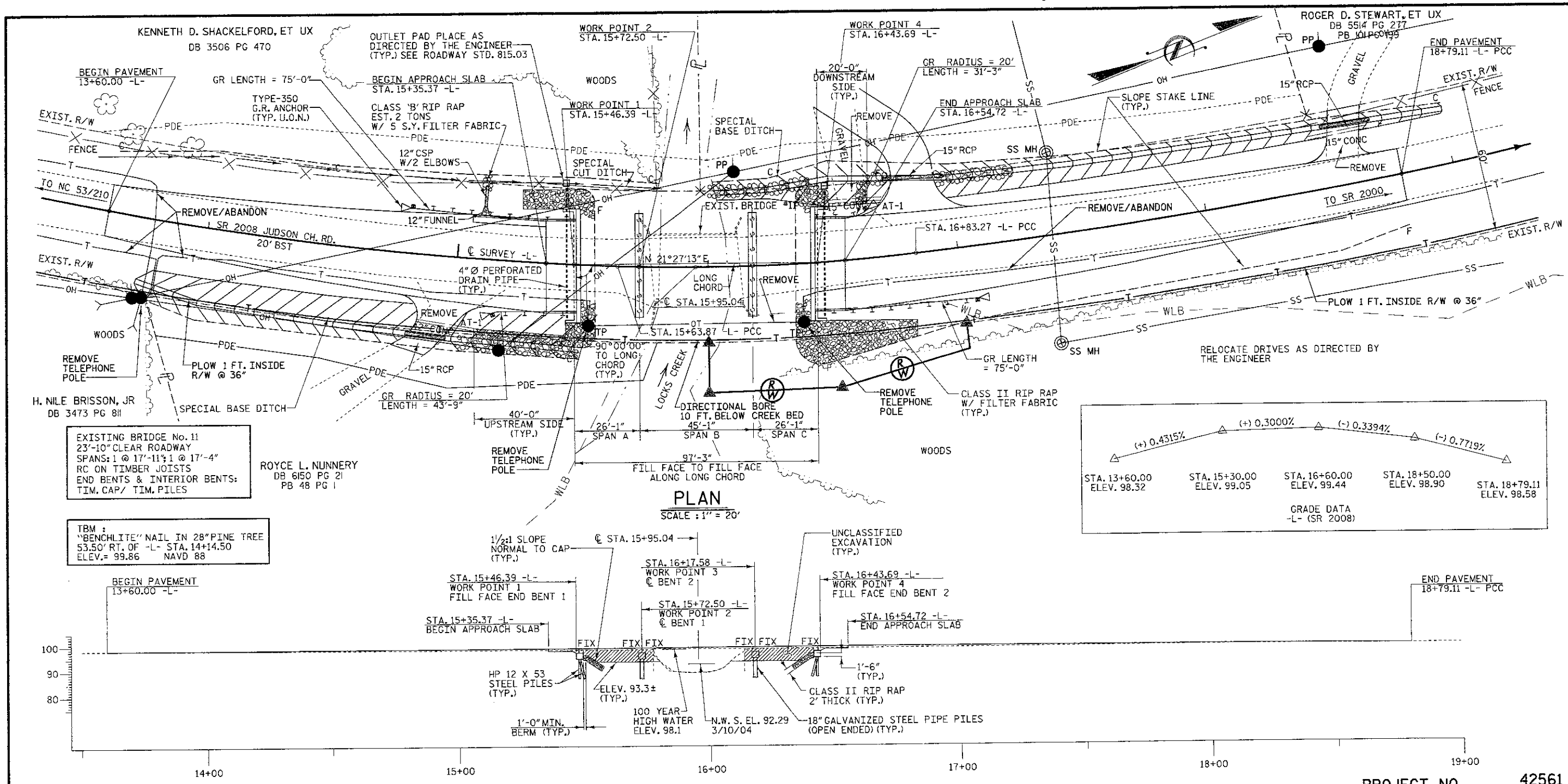

EXISTING BRIDGE No. 11
23'-10" CLEAR ROADWAY
SPANS: 1 @ 17'-11½ 1 @ 17'-4"
RC ON TIMBER JOISTS
END BENTS & INTERIOR BENTS:
TIM. CAP/ TIM. PILES

TBM :
"BENCHLITE" NAIL IN 28" PINE TREE
53.50' RT. OF -L- STA. 14+14.50
ELEV.= 99.86 NAVD 88

PROFILE ALONG ℄ SURVEY

SCALE : 1" = 20'

DENOTES ROADWAY FILL TO BE REMOVED

CURVE DATA -L-

PI STA. 13+20.78	PI STA. 16+23.68
Δ = 20°30'41" (LT)	Δ = 8°31'30" (LT)
Dc = 4°10'23"	Dc = 7°08'24"
L = 491.51'	L = 119.40
T = 248.41'	T = 59.81'
R = 1,372.96	R = 802.46
	BACK = N 23°43'32" E
	AHEAD = N 15°12'02" E
PI STA. 17+81.24	PI STA. 20+10.83
Δ = 4°42'42" (LT)	Δ = 14°59'17" (LT)
Dc = 2°24'22"	Dc = 5°43'19"
L = 195.84'	L = 261.94'
T = 97.97'	T = 131.72'
R = 2,381.40	R = 1,001.34

—T— DENOTES EXISTING TELEPHONE LINE
— OH — DENOTES EXISTING OVERHEAD POWER LINE
— OT — DENOTES EXISTING OVERHEAD TELEPHONE LINE
— SS — DENOTES EXISTING SANITARY SEWER LINE
—T— DENOTES PROPOSED TELEPHONE LINE (BURIED CABLE, FIBER & CONDUIT)

NOTE: GUARDRAIL LENGTHS AS SHOWN INCLUDE ANCHOR UNITS.

U.O.N. - UNLESS OTHERWISE NOTED

UTILITY CONTACTS

PROGRESS ENERGY
ALLAN DASEN
910-944-5274

CENTURYLINK TELEPHONE
DORIS BUNNELLS
910-678-0242

TIME WARNER CABLE
JACK CRAB
910-401-5034

PROJECT NO. 42561
CUMBERLAND COUNTY
STATION: 15+95.04 -L-

REPLACES BRIDGE NO. 11

STATE OF NORTH CAROLINA
DEPARTMENT OF TRANSPORTATION
RALEIGH

UTILITY CONFLICT PLAN BRIDGE ON SR 2008 OVER LOCKS CREEK BETWEEN NC 53/210 & SR 2000

35'-10" CLEAR ROADWAY - 90° SKEW

PLANS PREPARED BY:
MULKEY
ENGINEERS & CONSULTANTS

REVISIONS						SHEET NO.
NO.	BY:	DATE:	NO.	BY:	DATE:	30
1			3			TOTAL SHEETS
2			4			30

DRAWN BY : W. B. ALLEN DATE : 5/09
CHECKED BY : L. K. AUSTIN DATE : 6/09

10/8/2010 10:39:07 AM R:\Structures\BV5910_SD_UC_00.dgn