PROJ. NO. B-5232

118 BURKE COUNTY

B.M. #1 RR SPIKE IN EDGE PAVEMENT
9.38' LEFT OF STA 12+87.02 -L-
ELEV. 1109.12'

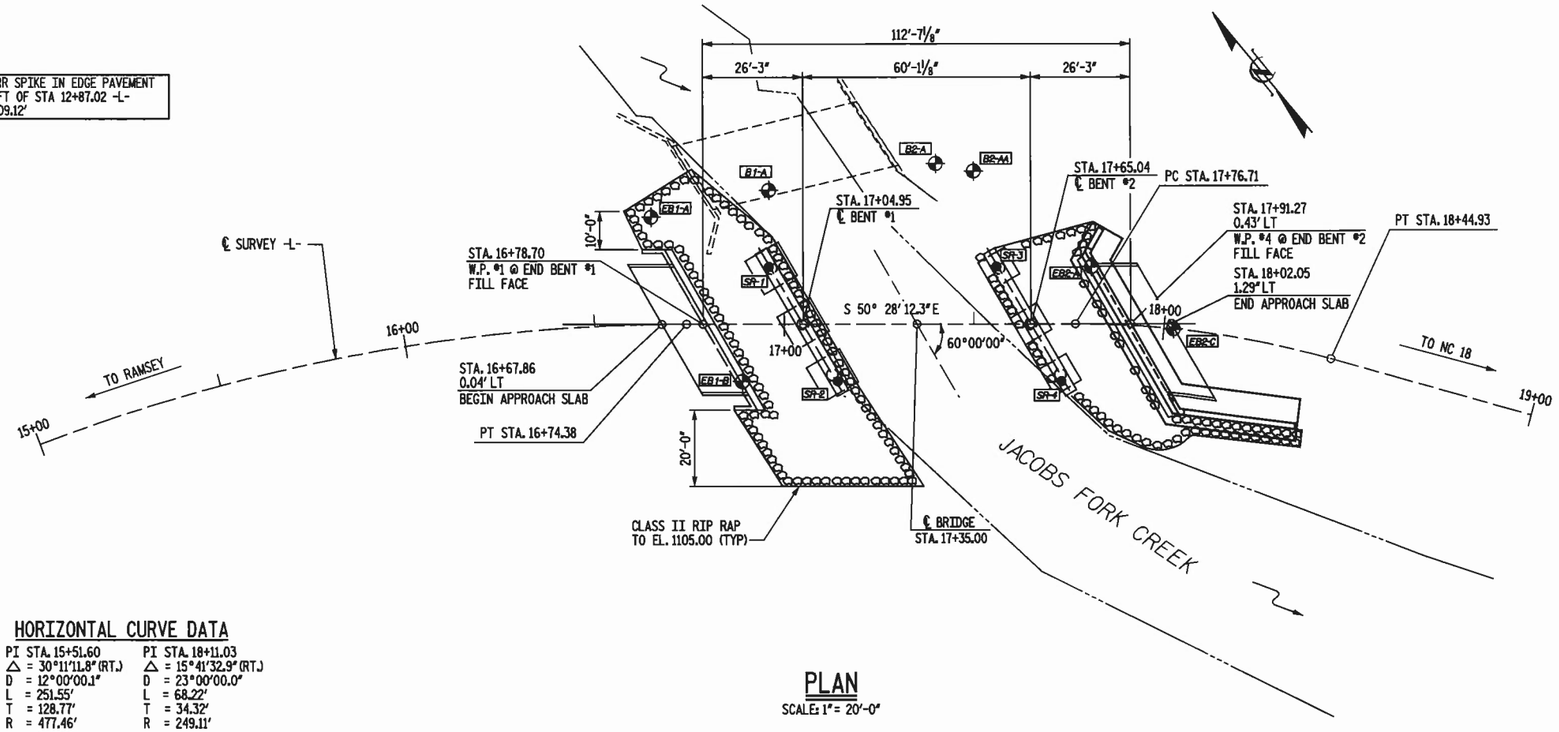

PLAN

SCALE: 1" = 20'-0"

HORIZONTAL CURVE DATA

PI STA. 15+51.60	PI STA. 18+11.03
△ = 30°11'11.8" (RT.)	△ = 15°41'32.9" (RT.)
D = 12°00'00.1"	D = 23°00'00.0"
L = 251.55'	L = 68.22'
T = 128.77'	T = 34.32'
R = 477.46'	R = 249.11'

HYDRAULIC DATA

DESIGN DISCHARGE	=	5600	CFS
DESIGN FREQUENCY	=	25	YRS
DESIGN HW ELEVATION	=	1105.91	FT
DRAINAGE AREA	=	26.30	SQ MI
BASE DISCHARGE (Q_{100})	=	5828	CFS
BASE HW ELEVATION	=	1107.59	FT

-0.5128% △ +0.3279%
P.I. 15+95.00
EL. 1,106.00'
L = 100'

GRADE DATA

+0.3279% △ +3.000%
P.I. 19+00.00
EL. 1,107.00'
L = 150'

GRADE DATA

NOTES

1. PILES FOR END BENT NO. 1 SHALL BE DRIVEN TO A MINIMUM BEARING CAPACITY OF 50 TONS EACH.
2. THE QUANTITY OF RIP RAP TO BE PAID FOR WILL BE THE ACTUAL NUMBER OF TONS OF EACH CLASS OF RIP RAP WHICH HAS BEEN INCORPORATED INTO THE COMPLETED AND ACCEPTED WORK. THE RIP RAP WILL BE MEASURED BY BEING WEIGHED IN TRUCKS ON CERTIFIED PLATFORM SCALES OR OTHER CERTIFIED WEIGHING DEVICES. THE QUANTITY OF RIP RAP WILL BE PAID FOR AT THE CONTRACT UNIT PRICE PER TON. FILTER FABRIC SHALL BE INCLUDED IN THE PRICE BID FOR CLASS II RIP RAP.

PLAIN RIP RAP CLASS II (2'-0" THICK)		FILTER FABRIC
END BENT NO. 1	370 TONS	340 SQUARE YARDS
ABUTMENT NO. 2	260 TONS	190 SQUARE YARDS
TOTAL	630 TONS	530 SQUARE YARDS
PLAIN RIP RAP CLASS B (1'-6" THICK)		
TOTAL	3 TONS	10 SQUARE YARDS

3. THIS STRUCTURE HAS BEEN DESIGNED IN ACCORDANCE WITH FHWA'S TECHNICAL ADVISORY T5140.20 (SCOUR AT BRIDGES).
4. PILES END BENT NO. 1 SHALL BE DRIVEN TO AN ELEVATION NO HIGHER THAN EL. 1084 FT AND SATISFY THE BEARING CAPACITY OF 50 TONS EACH.
5. WHEN DRIVING PILES, THE MAXIMUM BLOW COUNT SHALL NOT BE EXCEEDED.
6. STEEL PILE POINTS ARE REQUIRED FOR PILES AT END BENT NO. 1. SEE SPECIAL PROVISIONS FOR STEEL PILE POINTS.
7. THE REQUIRED BEARING CAPACITY OF THE SPREAD FOOTINGS AT INTERIOR BENT NO. 1, INTERIOR BENT NO. 2, AND ABUTMENT NO. 2 IS 4 TSF. THE REQUIRED BEARING CAPACITY OF THE SPREAD FOOTING FOR THE WINGS AT ABUTMENT #2 IS 2.0 TSF. THE REQUIRED CAPACITY SHALL BE VERIFIED.
8. THE SCOUR CRITICAL BOTTOM OF FOOTING ELEVATION FOR INTERIOR BENT NO. 1 FOR FOOTING 1 IS EL. 1087.973 FT, FOOTING 2 IS EL. 1087.948 FT, AND FOOTING 3 IN EL. 1087.923 FT. THE SCOUR CRITICAL ELEVATION FOR INTERIOR BENT NO. 2 FOR FOOTING 1 IS EL. 1089.17 FT, FOOTING 2 IS EL. 1089.145 FT, AND FOOTING 3 IS EL. 1089.12 FT. THE SCOUR CRITICAL BOTTOM OF FOOTING ELEVATION FOR ABUTMENT NO. 2 IS EL. 1092.00. THE SCOUR CRITICAL ELEVATIONS ARE FOR USE BY MAINTENENACE FORCES TO MONITOR POSSIBLE SCOUR PROBLEMS DURING THE LIFE OF THE STRUCTURE.
9. TO PROVIDE PROTECTION FROM POSSIBLE SCOUR, THE FOOTINGS SHALL NOT BE CONSTRUCTED AT AN ELEVATION HIGHER THAN SHOWN ON THE PLANS.
10. FOOTINGS SHALL BE KEYED AT LEAST 12 INCHES INTO ROCK WHERE ROCK IS ENCOUNTERED WITH MINIMUM THICKNESS AS SHOWN ON THE PLANS.
11. PIER SCOUR PROTECTION SHALL BE REQUIRED AT INTERIOR BENT NO. 1 AND INTERIOR BENT NO. 2. RIP RAP NOT TO BE PLACED ABOVE STREAM BED.
12. SCOUR PROTECTION SHALL BE REQUIRED AT ABUTMENT NO. 2.
13. CURRENT ADT = 1200 VPD.
14. DELINEATORS ON BARRIER RAIL AND ON STEEL BEAM GUARDRAIL SHALL BE INCLUDED IN THE PRICE BID FOR STEEL BEAM GUARDRAIL.

⊕ GEOTECH BORE HOLES LOCATION

● SOUNDING ROD

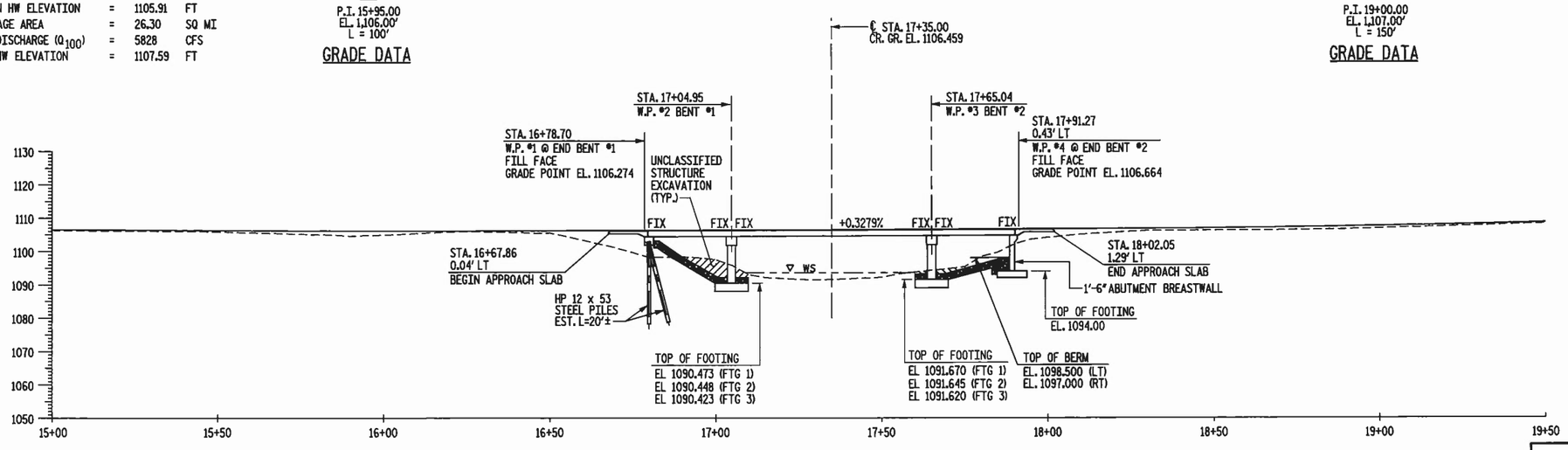

PROFILE ALONG ℄ SURVEY

SCALE: 1" = 20'

DESCRIPTION OF EXISTING BRIDGE
1 SPAN @ 51'-0"; 3"x 4" TIMBER FLOOR / 2.5" ASPHALT WEARING SURFACE; I-BEAMS ON REINFORCED CONCRETE ABUTMENTS
19'-4" CLEAR ROADWAY WIDTH SHALL BE REMOVED.

PROJECT NO. 42834
COUNTY: BURKE
STATION: 17+35.00
REPLACES BRIDGE NO. 118

STATE OF NORTH CAROLINA
DEPARTMENT OF TRANSPORTATION
RALEIGH

BRIDGE NO. 118 ON SR 1907
OVER JACOB FORK RIVER

Florence & Hutcheson
CONSULTING ENGINEERS
5121 Kingdom Way, Suite 100 Raleigh, NC 27607
NC License No: F-0258

NORTH CAROLINA PROFESSIONAL SEAL 20587 ENGINEER JAMES E. MONDOLFI
2-9-10

REVISIONS						SHEET NO.
NO.	BY	DATE	NO.	BY	DATE	1
1			3			TOTAL SHEETS
2			4			30

DRAWN BY: B.L. MARIOTTE DATE: DEC 2009
CHECKED BY: J.E. MONDOLFI DATE: DEC 2009

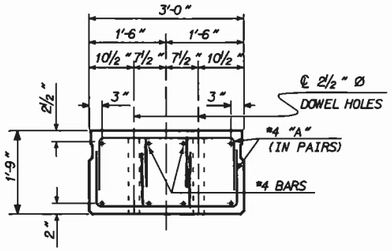

SLAB END ELEVATION

THE 2½" DOWEL HOLES AT FIXED ENDS OF SLAB SECTIONS SHALL BE FILLED WITH GROUT.

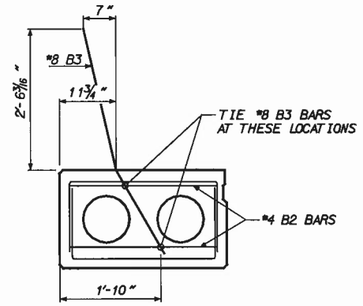

TIE LOCATION FOR #8 B3

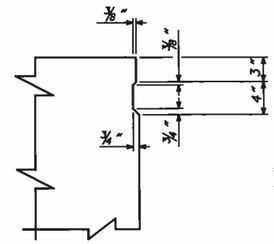

SHEAR KEY DETAIL

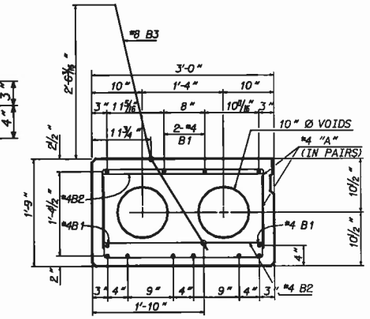

25' SPAN

8 -½" Ø H.S.STRANDS
EXTERIOR SLAB SECTIONS

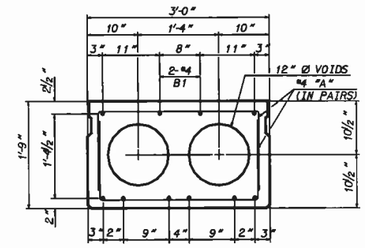

25' SPAN

8 -½" Ø H.S.STRANDS
INTERIOR SLAB SECTIONS

GENERAL NOTES

ASSUMED LIVE LOAD - HS 20-44 OR ALTERNATE LOADING.

CONCRETE: f'c = 5000 psi, 25' SPAN ONLY
✱ CONCRETE: f'c$_1$ = 4000 psi, 25' SPAN ONLY
CONCRETE: f'c = 7000 psi, 60' SPAN ONLY
✱ CONCRETE: f'c$_1$ = 5000 psi, 60' SPAN ONLY
✱ (COMPRESSIVE STRENGTH @ TRANSFER OF STRESSING FORCE.)

ALL PRESTRESS STRANDS SHALL MEET THE REQUIREMENTS OF ASTM A416.

ALL PRESTRESS STRANDS SHALL BE 7 WIRE, LOW RELAXATION, HIGH STRENGTH CABLES IN ACCORDANCE WITH THE SPECIFICATIONS.

SIZE TYPE	AREA	ULTIMATE STR.
1/2" Ø HIGH STR.	0.153 □"	41,300# PER CABLE

APPLIED FORCE
30,980# PER CABLE

STRUCTURAL STEEL ITEMS SHALL BE OF A GRADE CONFORMING TO EITHER ASTM A36 OR A373, EXCEPT HIGH STRENGTH BOLTS. HIGH STRENGTH BOLTS SHALL BE ASTM A325. ALL STRUCTURAL STEEL SHALL BE GALVANIZED AS PER THE SPECIFICATIONS.

ALL MATERIAL AND WORKMANSHIP SHALL COMPLY WITH THE APPLICABLE REQUIREMENTS OF THE STANDARD SPECIFICATIONS FOR ROADS AND STRUCTURES OF THE NC DEPARTMENT OF TRANSPORTATION DATED JANUARY 2002 AND WITH THE SPECIAL PROVISIONS.

THE ULTIMATE STRENGTH OF THE CORED SLAB UNIT MUST MEET THE REQUIREMENTS OF THE APPLICABLE AASHTO SPECIFICATIONS. STRANDS SHALL BE CUT FLUSH WITH ENDS OF SLABS.

A POSITIVE HOLD DOWN SYSTEM MUST BE EMPLOYED TO PREVENT VOIDS FROM RISING.

NOTE:
SPIRAL WIRE REINFORCEMENT MAY BE USED IN LEIU OF DEFORMED BARS FOR STIRRUPS. MIN. W3.5 X 6" PITCH.

UNLESS OTHERWISE NOTED ON THE PLANS. ALL EXPOSED CORNERS ON STRUCTURES SHALL BE CHAMFERED ¾".

APPLY EPOXY PROTECTIVE COATING TO THE ENDS OF THE CORED SLAB UNITS.

SHEATH CHART		
SPAN LENGTH	NUMBER OF SHEATHED STRANDS PER EXTERIOR SLAB SECTIONS	NUMBER OF SHEATHED STRANDS PER INTERIOR SLAB SECTIONS
60'	✱ 2 @ 2"	✱ 2 @ 2"
60'	✱✱ 2 @ 2"	✱✱ 2 @ 2"

✱ BOND SHALL BE BROKEN ON THESE STRANDS FOR A DISTANCE OF 4 FEET FROM THE END OF THE SLAB

✱✱ BOND SHALL BE BROKEN ON THESE STRANDS FOR A DISTANCE OF 6 FEET FROM THE END OF THE SLAB

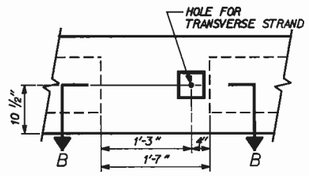

ELEVATION VIEW

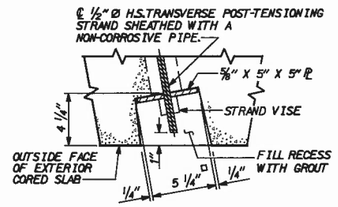

SECTION B-B

DETAIL "A"

GROUTED RECESS AT END OF POST-TENSIONED STRAND CORED SLABS

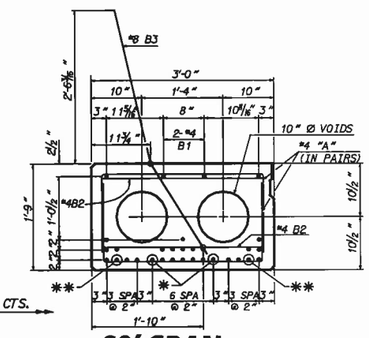

60' SPAN

29 -½" Ø H.S.STRANDS
EXTERIOR SLAB SECTIONS

⊙ STRAND IS SHEATHED. SEE SHEATH CHART.

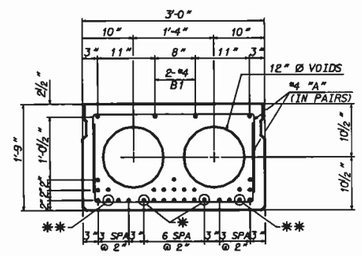

60' SPAN

29 -½" Ø H.S.STRANDS
INTERIOR SLAB SECTIONS

EXTERIOR SLAB UNIT	25'	60'
CAMBER (SLAB UNIT ALONE IN PLACE)	0.129' (UP)	2.393' (UP)
DEFLECTION (SUPERIMPOSED DEAD LOAD)	0.015 (DOWN)*	0.463 (DOWN)*
FINAL DEFLECTION	0.114' (UP)	1.930' (UP)
* INCLUDES FUTURE WEARING SURFACE		

INTERIOR SLAB UNIT	25'	60'
CAMBER (SLAB UNIT ALONE IN PLACE)	0.146' (UP)	2.789' (UP)
DEFLECTION (SUPERIMPOSED DEAD LOAD)	0.016' (DOWN)*	0.463' (DOWN)*
FINAL DEFLECTION	0.130' (UP)	2.326' (UP)
* INCLUDES FUTURE WEARING SURFACE		

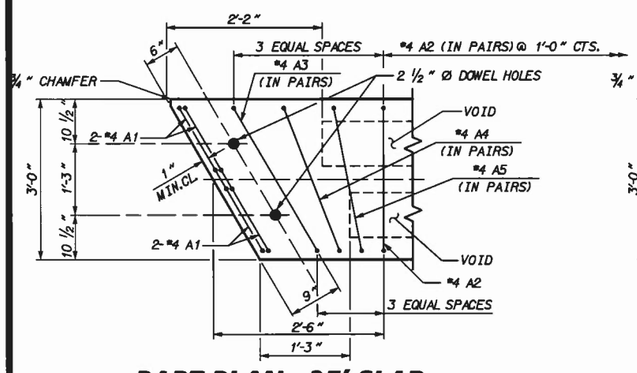

PART PLAN - 25' SLAB

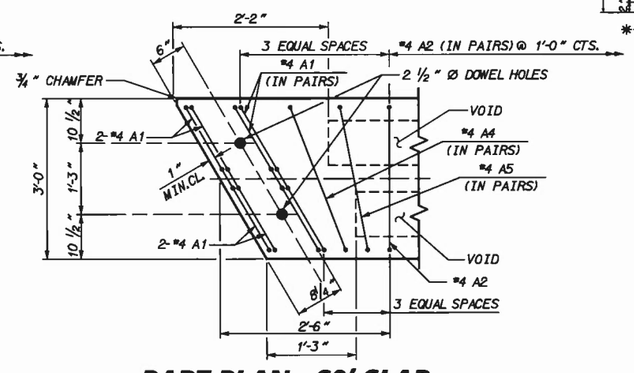

PART PLAN - 60' SLAB

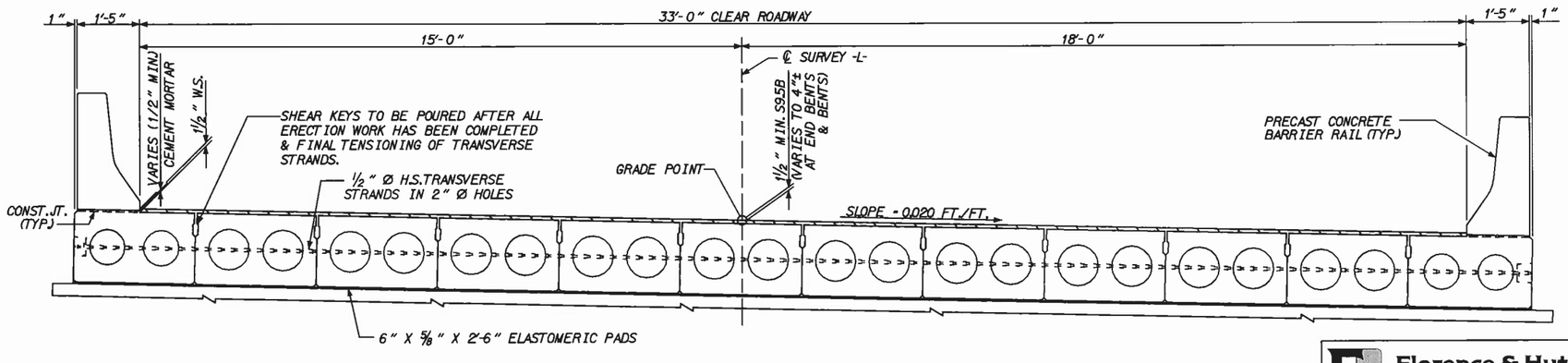

TYPICAL SECTION

NOT TO SCALE

PROJECT NO. 42834
COUNTY: BURKE
STATION: 17+35.00
REPLACES BRIDGE NO. 118

STATE OF NORTH CAROLINA
DEPARTMENT OF TRANSPORTATION
RALEIGH

STANDARD PRESTRESSED CORED SLAB
25' AND 60' SPANS
33' CLEAR ROADWAY - 60° SKEW

Florence & Hutcheson
CONSULTING ENGINEERS
5121 Kingdom Way, Suite 100 Raleigh, NC 27607
NC License No: F-0258

NORTH CAROLINA PROFESSIONAL SEAL 20532 ENGINEER JAMES E. MONDOLFI
2-9-10

REVISIONS						SHEET NO.
NO.	BY	DATE	NO.	BY	DATE	2
1			3			TOTAL SHEETS
2			4			30

DRAWN BY: B.L. MARIOTTE DATE: DEC 2009
CHECKED BY: J.E. MONDOLFI DATE: DEC 2009

FILE NAME: p:\rnwa\dr13\burke_20\bu2832\structure\118_sht2.25.dgn
4-23-07 PM Ko & Associates, P.C.
PLOT: 2/9/2010

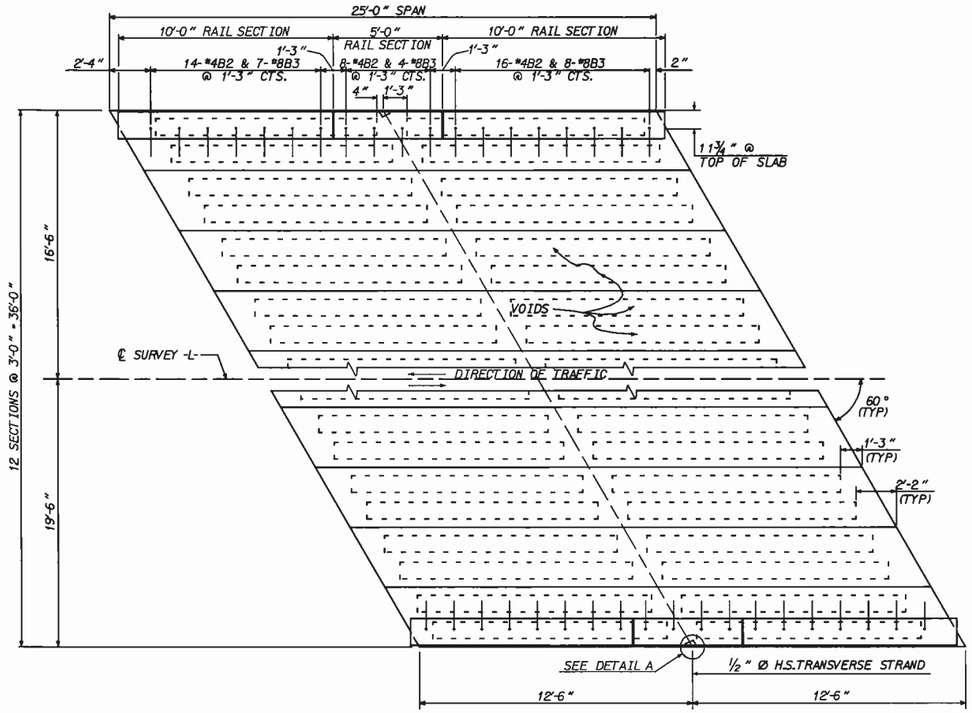

PLAN VIEW - 25' SPAN

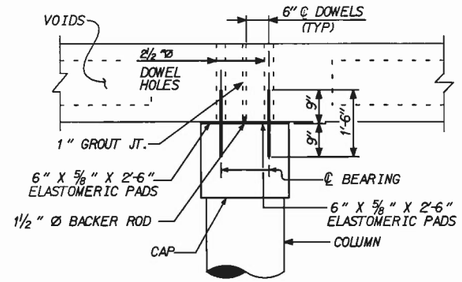

SECTION AT BENTS

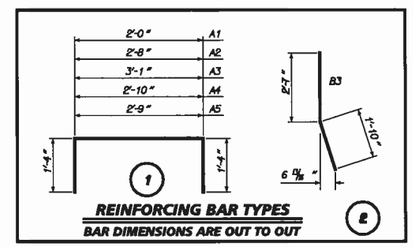

BILL OF MATERIAL FOR ONE 25'-0" INTERIOR CORED SLAB SECTION

BAR	NO.	SIZE	TYPE	LENGTH	WEIGHT
B1	2	#4	STR	24'-7"	33
A1	8	#4	1	4'-8"	25
A2	42	#4	1	5'-4"	150
A3	4	#4	1	5'-9"	15
A4	4	#4	1	5'-6"	15
A5	4	#4	1	5'-5"	14
REINFORCING STEEL				LBS.	252
5000 P.S.I. CONCRETE				C. Y.	3.4
0.5"Ø L.R. STRANDS				NO.	8

BILL OF MATERIAL FOR ONE 60'-0" INTERIOR CORED SLAB SECTION

BAR	NO.	SIZE	TYPE	LENGTH	WEIGHT
B1	4	#4	STR	30'-8"	82
A1	16	#4	1	4'-8"	50
A2	112	#4	1	5'-4"	399
A4	4	#4	1	5'-6"	15
A5	4	#4	1	5'-5"	14
REINFORCING STEEL				LBS.	560
7000 P.S.I. CONCRETE				C. Y.	8.2
0.5"Ø L.R. STRANDS				NO.	29

BILL OF MATERIAL FOR ONE 25'-0" EXTERIOR CORED SLAB SECTION

BAR	NO.	SIZE	TYPE	LENGTH	WEIGHT
B1	4	#4	STR	24'-7"	66
B2	38	#4	STR	2'-8"	68
* B3	19	#8	2	4'-5"	224
A1	8	#4	1	4'-8"	25
A2	42	#4	1	5'-4"	150
A3	4	#4	1	5'-9"	15
A4	4	#4	1	5'-6"	15
A5	4	#4	1	5'-5"	14
REINFORCING STEEL				LBS.	353
*EPOXY COATED REINFORCING STEEL				LBS.	224
5000 P.S.I. CONCRETE				C. Y.	3.9
0.5"Ø L.R. STRANDS				NO.	8

BILL OF MATERIAL FOR ONE 60'-0" EXTERIOR CORED SLAB SECTION

BAR	NO.	SIZE	TYPE	LENGTH	WEIGHT
B1	4	#4	STR	30'-8"	82
B2	94	#4	STR	2'-8"	167
* B3	47	#8	2	4'-5"	554
A1	16	#4	1	4'-8"	50
A2	112	#4	1	5'-4"	399
A4	4	#4	1	5'-6"	15
A5	4	#4	1	5'-5"	14
REINFORCING STEEL				LBS.	727
*EPOXY COATED REINFORCING STEEL				LBS.	554
7000 P.S.I. CONCRETE				C. Y.	9.2
0.5"Ø L.R. STRANDS				NO.	29

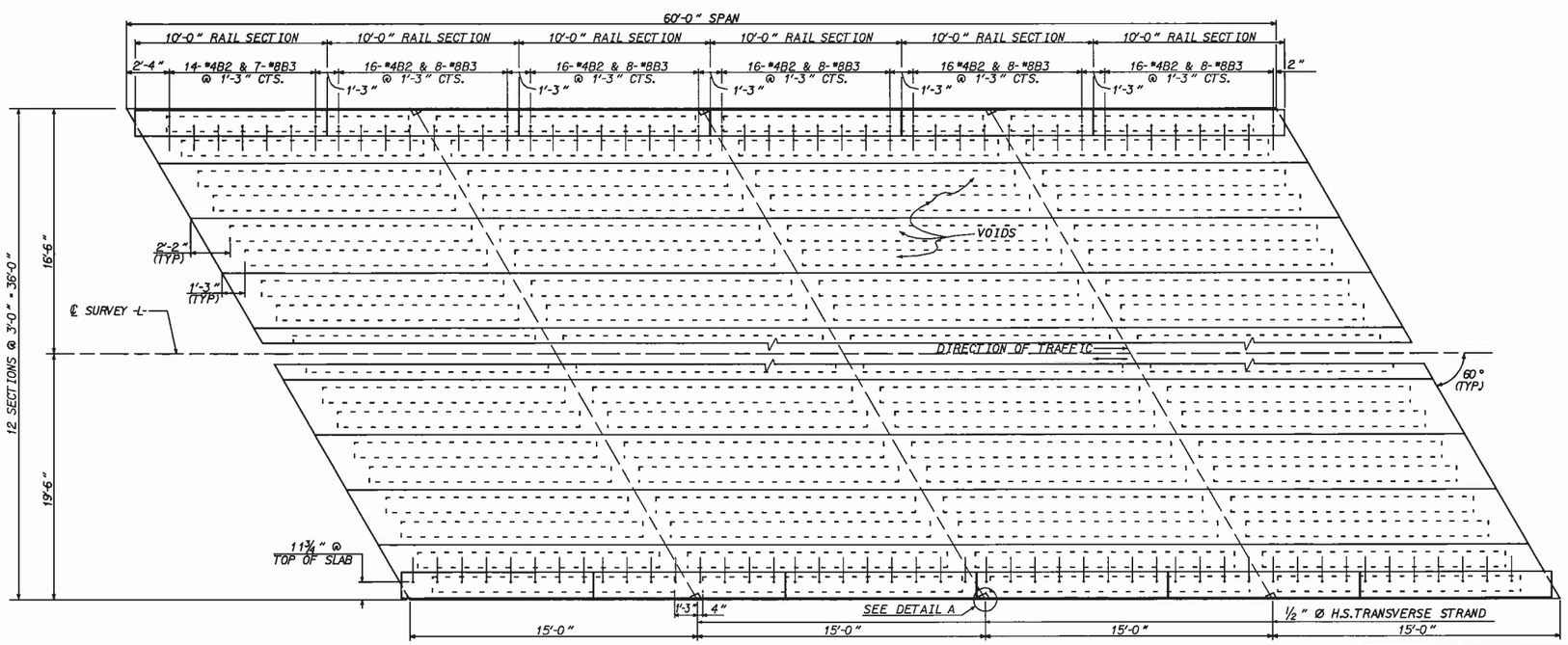

PLAN VIEW - 60' SPAN

NOT TO SCALE

NOTES

EACH PRECAST RAIL UNIT SHALL BE CAST WITH CLASS AA CONCRETE.

CENTERLINE OF RAIL TO BE FLUSH WITH END OF CORED SLAB UNITS AT EACH END OF SPAN.

EACH PRECAST RAIL UNIT SHALL BE SUPPLIED WITH LIFTING DEVICE(S). NO CABLES ARE TO BE WRAPPED AROUND THE RAIL UNITS FOR LIFTING.

THE JOINT SEALER SHALL BE LOW MODULUS SILICONE SEALANT. SEE SECTION 1028-4 OF THE STANDARD SPECIFICATIONS.

PROJECT NO. 42834
COUNTY: BURKE
STATION: 17+35.00
REPLACES BRIDGE NO. 118

STATE OF NORTH CAROLINA
DEPARTMENT OF TRANSPORTATION
RALEIGH

BRIDGE NO. 118 ON SR 1907
OVER JACOB FORK RIVER

Florence & Hutcheson
CONSULTING ENGINEERS
5121 Kingdom Way, Suite 100 Raleigh, NC 27607
NC License No: F-0258

NORTH CAROLINA PROFESSIONAL SEAL 20532 ENGINEER JAMES E. MONDOLFI
2-9-10

REVISIONS						SHEET NO.
NO.	BY	DATE	NO.	BY	DATE	3
1			3			TOTAL SHEETS
2			4			30

DRAWN BY: B.L. MARIOTTE DATE: DEC 2009
CHECKED BY: J.E. MONDOLFI DATE: DEC 2009

PLOT: 2/9/2010 4:42:51 PM Ks & Associates, P.C.
FILE NAME: p:\roads\bdu12\bu-ks_39\sub39893\structure\118_sht3_118.dgn

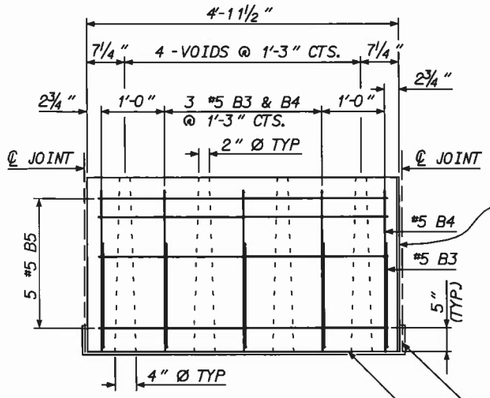

TYPICAL 5'-0" PRECAST UNIT

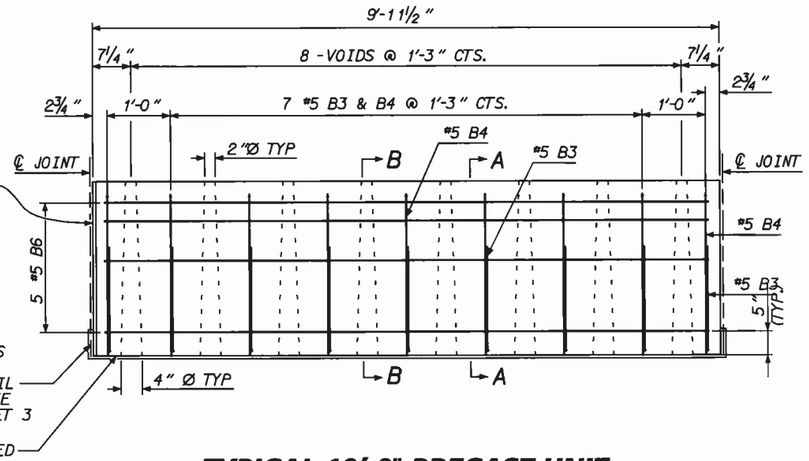

TYPICAL 10'-0" PRECAST UNIT

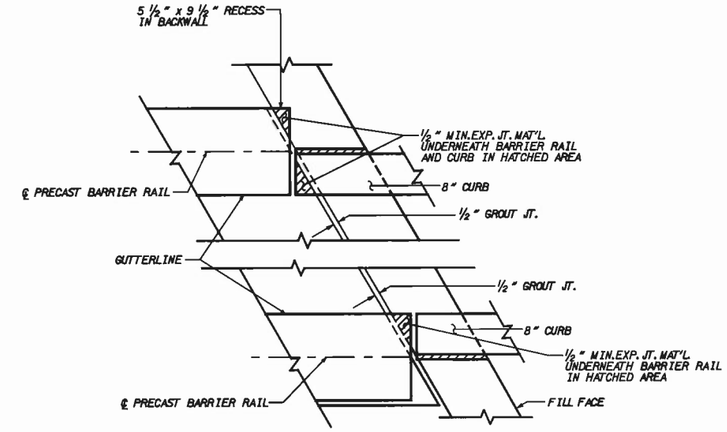

PLAN OF BARRIER RAIL AND CURB CORED SLAB AT END BENTS

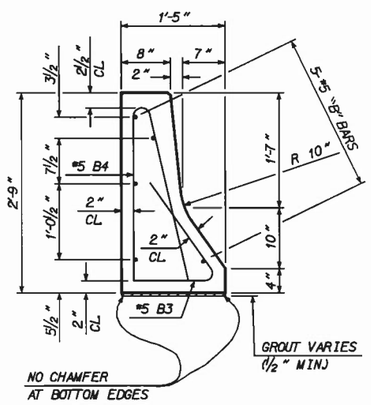

SECTION A-A

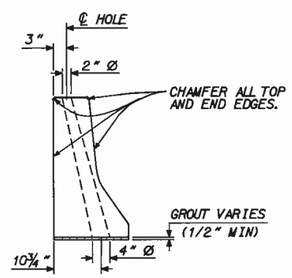

SECTION B-B

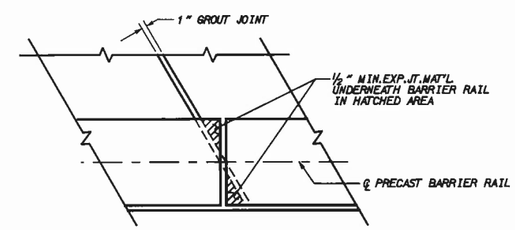

PLAN OF BARRIER RAIL CORED SLAB AT BENTS

BILL OF MATERIAL FOR ONE 5'-0" RAIL SECTION					
BAR	NO.	SIZE	TYPE	LENGTH	WEIGHT
B3	5	#5	1	4'-11"	26
B4	5	#5	2	2'-8"	14
B5	5	#5	STR	4'-7"	24
REINFORCING STEEL LBS. = 64					
CLASS AA CONCRETE CU. YDS. = 0.5					

BILL OF MATERIAL FOR ONE 10'-0" RAIL SECTION					
BAR	NO.	SIZE	TYPE	LENGTH	WEIGHT
B3	9	#5	1	4'-11"	46
B4	9	#5	2	2'-8"	25
B6	5	#5	STR	9'-7"	50
REINFORCING STEEL LBS. = 121					
CLASS AA CONCRETE CU. YDS. = 1.0					

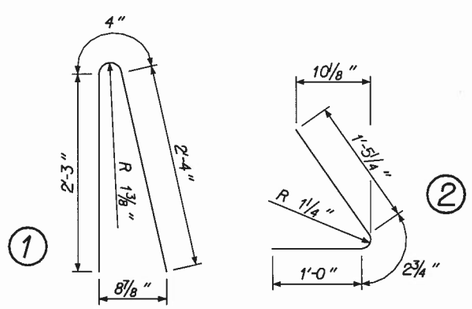

REINFORCING BAR TYPES
BAR DIMENSIONS ARE OUT TO OUT

PROJECT NO. 42834
COUNTY: BURKE
STATION: 17+35.00
REPLACES BRIDGE NO. 118

STATE OF NORTH CAROLINA
DEPARTMENT OF TRANSPORTATION
RALEIGH

BRIDGE NO. 118 ON SR 1907
OVER JACOB FORK RIVER

Florence & Hutcheson
CONSULTING ENGINEERS
5121 Kingdom Way, Suite 100 Raleigh, NC 27607
NC License No: F-0258

NORTH CAROLINA PROFESSIONAL SEAL 025 ENGINEER JAMES E. MONDOLFI
2-9-10

REVISIONS						SHEET NO.
NO.	BY	DATE	NO.	BY	DATE	4
1			3			TOTAL SHEETS
2			4			30

DRAWN BY: B.L. MARIOTTE DATE: DEC 2009
CHECKED BY: J.E. MONDOLFI DATE: DEC 2009

NOT TO SCALE

FILE NAME: p:\rosa\dist13\bun4a_SR\rosa13BRM5\structure\U118_sht4.Rdgn
PLOT: 2/9/2010 4-42841 PH Vo & Associates, P.C.

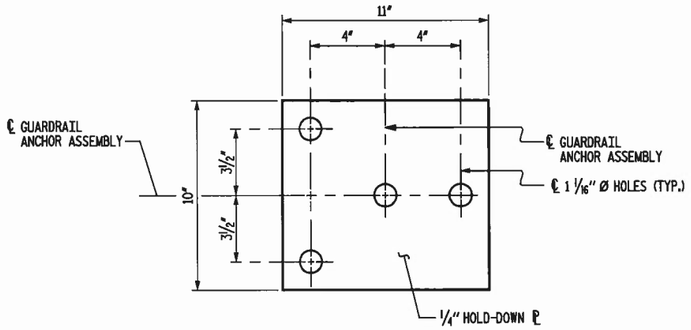

PLAN

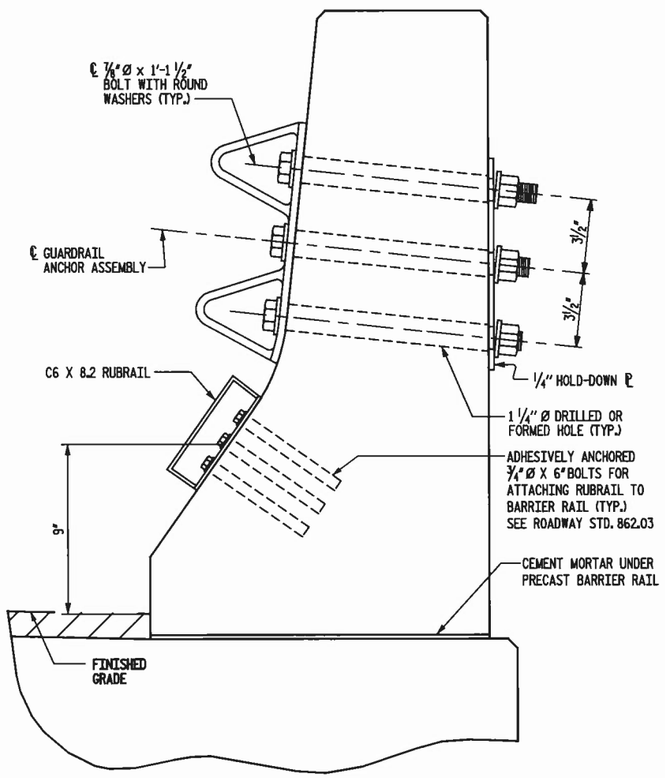

SECTION L-L

GUARDRAIL ANCHOR ASSEMBLY DETAILS

FOR CONCRETE BARRIER RAIL ONLY
(FOR LOCATION OF GUARDRAIL ANCHOR ASSEMBLY, SEE THIS SHEET)

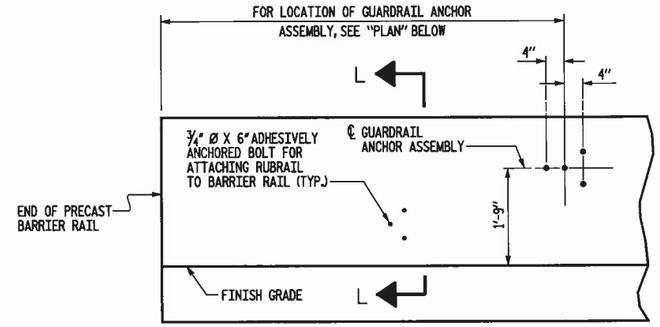

ELEVATION

FOR LOCATION OF RUBRAIL, SEE ROADWAY STD. 862.03

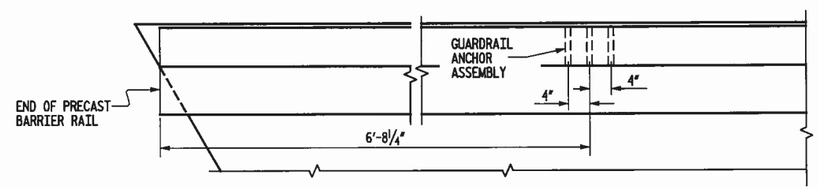

PLAN

LOCATION OF ANCHORS FOR GUARDRAIL

FOR CONCRETE BARRIER RAIL ONLY
ABUTMENT #1 SHOWN, ABUTMENT #2 SIMILAR

NOTES

THE GUARDRAIL ANCHOR ASSEMBLY SHALL CONSIST OF A 1/4" HOLD DOWN PLATE AND 7/8" Ø BOLTS WITH NUTS AND WASHERS, RUBRAIL, AND ADHESIVELY ANCHORED BOLTS.

THE HOLD-DOWN PLATE SHALL CONFORM TO AASHTO M270 GRADE 36. AFTER FABRICATION, THE HOLD-DOWN PLATE SHALL BE HOT-DIP GALVANIZED IN ACCORDANCE WITH AASHTO M111.

BOLTS SHALL CONFORM TO THE REQUIREMENTS OF ASTM A307 AND NUTS SHALL CONFORM TO THE REQUIREMENTS OF AASHTO M291. BOLTS, NUTS AND WASHERS SHALL BE GALVANIZED. (AT THE CONTRACTOR'S OPTION, STAINLESS STEEL BOLTS, NUTS AND WASHERS MAY BE USED AS AN ALTERNATE FOR THE 7/8" Ø GALVANIZED BOLTS, NUTS AND WASHERS. THEY SHALL CONFORM TO OR EXCEED THE MECHANICAL REQUIREMENTS OF ASTM A307. THE USE OF THIS ALTERNATE SHALL BE APPROVED BY THE ENGINEER.)

THE GUARDRAIL ANCHOR ASSEMBLY IS REQUIRED AT ALL POINTS WHERE APPROACH GUARDRAIL IS TO BE ATTACHED TO THE END OF CONCRETE BARRIER RAIL OR COCNCRETE END POSTS. FOR POINTS OF ATTACHMENT, SEE SKETCH.

AFTER INSTALLATION, THE EXPOSED THREAD OF THE BOLT SHALL BE BURRED WITH A SHARP POINTED TOOL.

THE COST OF THE GUARDRAIL ANCHOR ASSEMBLY SHALL BE INCLUDED IN THE UNIT CONTRACT PRICE BID FOR GUARDRAIL ANCHOR UNIT, TYPE B-77.

THE 1 1/4" Ø HOLES SHALL BE FORMED OR DRILLED WITH A CORE BIT. IMPACT TOOLS WILL NOT BE PERMITTED. ANY CONCRETE DAMAGED BY THIS WORK SHALL BE REPAIRED TO THE SATISFACTION OF THE ENGINEER.

THE C6 X 8.2 RUBRAIL IS TO BE ADHESIVELY ANCHORED TO THE RAIL USING THREE 3/4" Ø X 6" BOLTS WITH WASHERS. LEVEL ONE FIELD TESTING IS REQUIRED, AND THE YIELD LOAD OF THE 3/4" Ø BOLT IS 12 KIPS. FOR ADHESIVELY ANCHORED ANCHOR BOLTS OR DOWELS, SEE SPECIAL PROVISIONS. SEE ROADWAY STANDARD 862.03 FOR DETAILS AND LOCATION OF THE RUBRAIL.

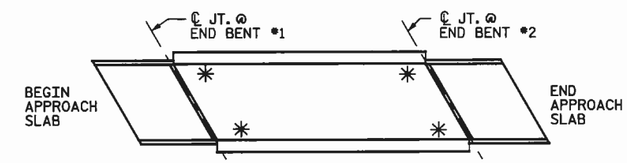

SKETCH SHOWING POINTS OF ATTACHMENT

✱ INDICATES POINTS OF ATTACHMENT

PROJECT NO. 42834
COUNTY: BURKE
STATION: 17+35.00
REPLACES BRIDGE NO. 118

STATE OF NORTH CAROLINA
DEPARTMENT OF TRANSPORTATION
RALEIGH

SUPERSTRUCTURE
GUARDRAIL ANCHORAGE
DETAILS

REVISIONS						SHEET NO.
NO.	BY	DATE	NO.	BY	DATE	5
1			3			TOTAL SHEETS
2			4			30

Florence & Hutcheson
CONSULTING ENGINEERS
5121 Kingdom Way, Suite 100 Raleigh, NC 27607
NC License No: F-0258

NORTH CAROLINA PROFESSIONAL SEAL 20532 ENGINEER JAMES E. MONDOLFI
2-9-10

NOT TO SCALE

DRAWN BY: B.L. MARIOTTE DATE: DEC 2009
CHECKED BY: J.E. MONDOLFI DATE: DEC 2009

PLOT: 2/9/2010 4:43:57 PM Kc & Associates, P.C.
FILE NAME: p:\roaw\bh123\bh123_SP\sheet\BRBH\structure-sup\U18_anch1.11.dgn

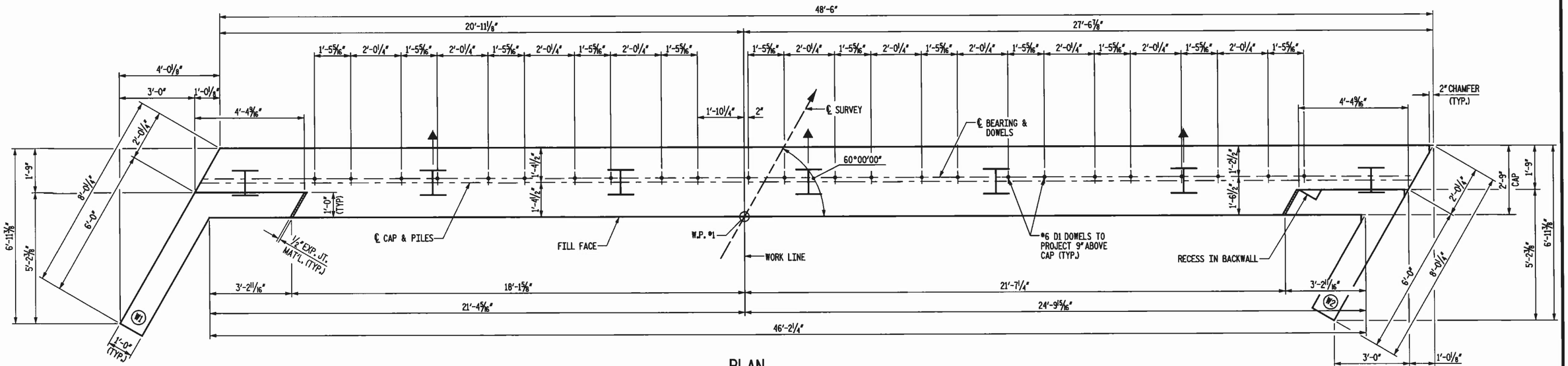

PLAN

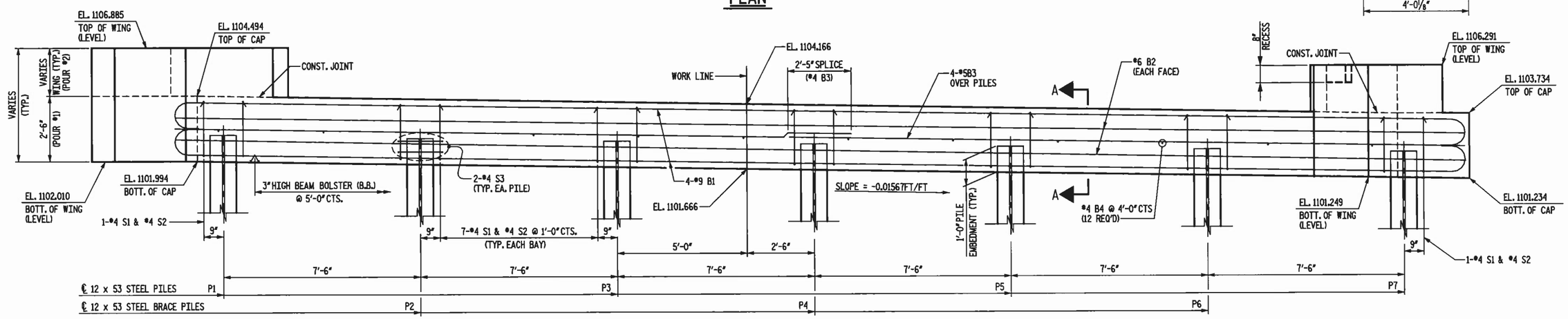

ELEVATION

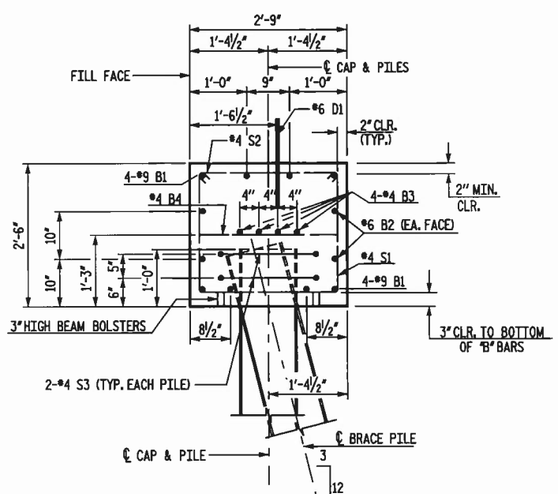

SECTION A-A

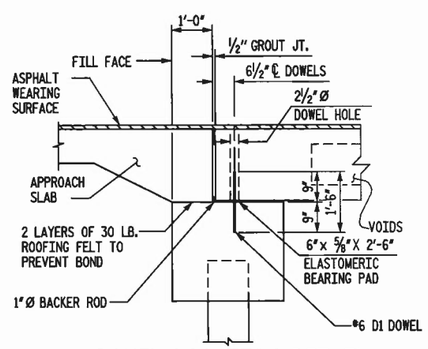

DOWEL LOCATION DETAIL

NOTE: ℄ OF DOWELS SHALL MATCH ℄ OF DOWEL HOLES IN CORED SLAB UNITS.

TOP OF PILE ELEVATIONS	
PILE	ELEVATION
P1	1102.987
P2	1102.870
P3	1102.752
P4	1102.635
P5	1102.517
P6	1102.400
P7	1101.282

NOTE:

STIRRUPS IN CAP MAY BE SHIFTED SLIGHTLY AS NECESSARY TO CLEAR DOWELS.

INDICATES BRACE PILE (BATTER: 3:12)

NOT TO SCALE

PROJECT NO. 42834
COUNTY: BURKE
STATION: 17+35.00
REPLACES BRIDGE NO. 118

STATE OF NORTH CAROLINA
DEPARTMENT OF TRANSPORTATION
RALEIGH

CAST - IN - PLACE
END BENT NO. 1

Florence & Hutcheson
CONSULTING ENGINEERS
5121 Kingdom Way, Suite 100 Raleigh, NC 27607
NC License No: F-0258

NORTH CAROLINA PROFESSIONAL SEAL 20532 ENGINEER JAMES E. MONDOWNEY
2-9-10

REVISIONS						SHEET NO.
NO.	BY	DATE	NO.	BY	DATE	6
1			3			TOTAL SHEETS
2			4			30

DRAWN BY: B.L. MARIOTTE DATE: DEC 2009
CHECKED BY: J.C. KO DATE: DEC 2009

FILE NAME: p:\cons\dot\33\bur4x_39\end38830\structure\u18_end1_1b.dgn
PLOT: 2/9/2010 4:43:58 PM Ko & Associates, P.C.

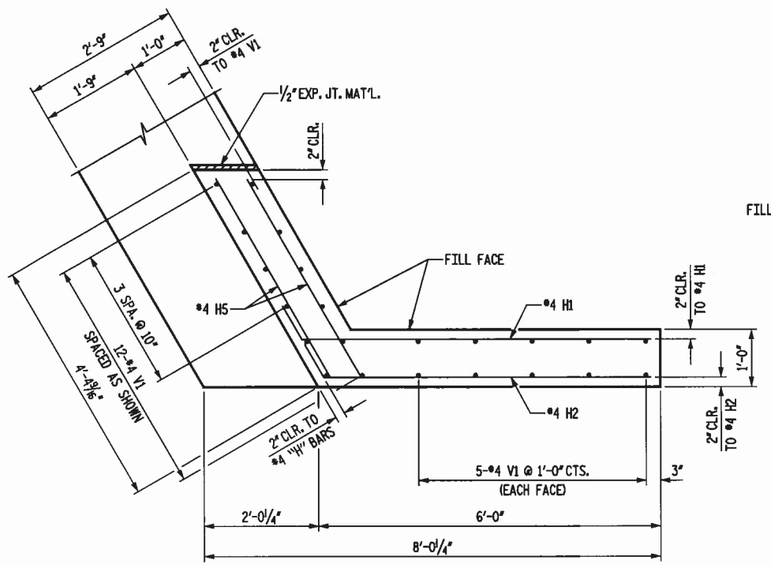

PLAN OF WING - W1

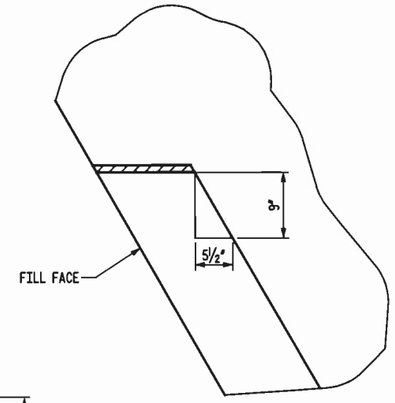

DETAIL OF RECESS IN TOP OF BACKWALL AT WING W2

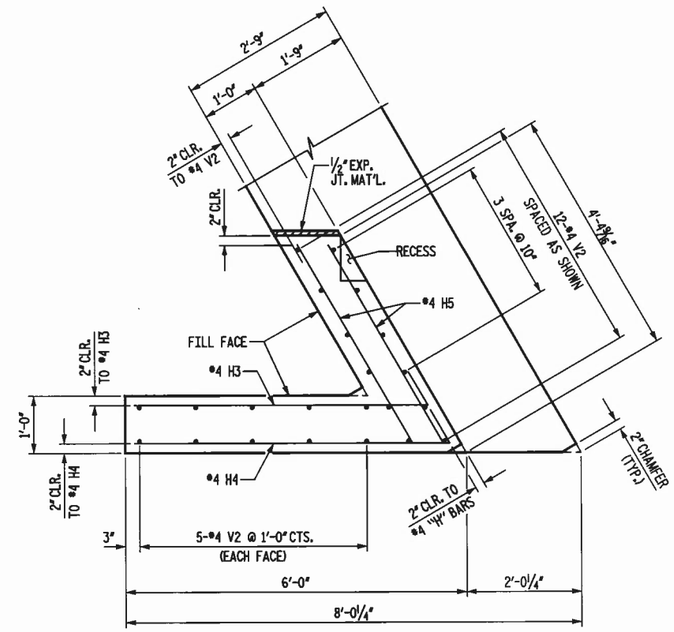

PLAN OF WING - W2

NOTE: SHIFT, FIELD BEND OR CUT REINFORCING STEEL AS NECESSARY TO CLEAR RECESS IN TOP OF BACKWALL.

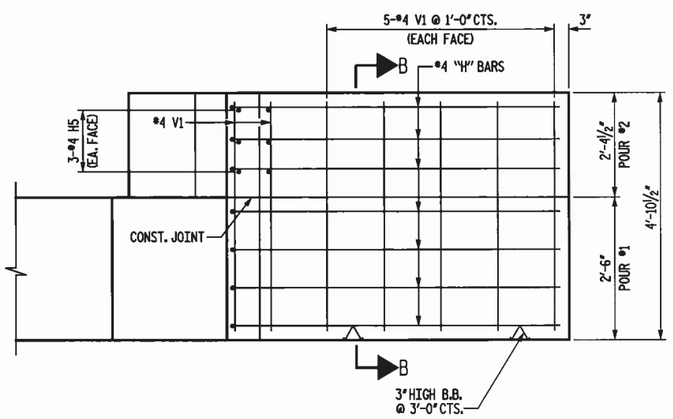

ELEVATION OF WING - W1

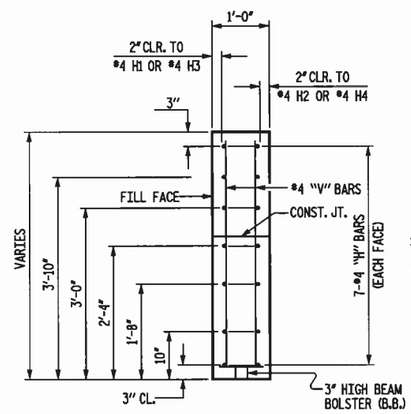

SECTION B-B

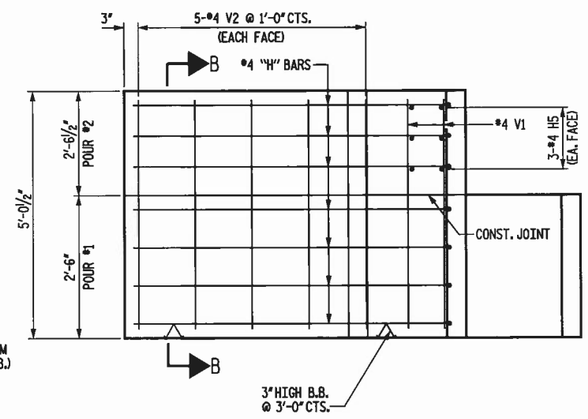

ELEVATION OF WING - W2

BILL OF MATERIAL

END BENT #1

BAR	NO.	SIZE	TYPE	LENGTH	WEIGHT
B1	8	9	1	50'-7"	1376
B2	4	6	STR	48'-1"	289
B3	8	4	STR	25'-3"	135
B4	12	4	STR	2'-5"	19
D1	24	6	STR	1'-6"	54
H1	7	4	5	6'-9"	32
H2	7	4	5	6'-4"	30
H3	7	4	6	5'-10"	27
H4	7	4	6	6'-2"	29
H5	12	4	STR	3'-11"	31
S1	44	4	3	7'-5"	218
S2	44	4	2	3'-2"	93
S3	14	4	4	6'-6"	61
V1	22	4	STR	4'-6"	66
V2	22	4	STR	4'-8"	69

REINFORCING STEEL TOTAL 2529 LBS.

CLASS "A" CONCRETE

POUR 1	13.2	CYS.
POUR 2	2.1	CYS.
TOTAL	15.3	CYS.

BAR TYPES

ALL BAR DIMENSIONS ARE OUT TO OUT

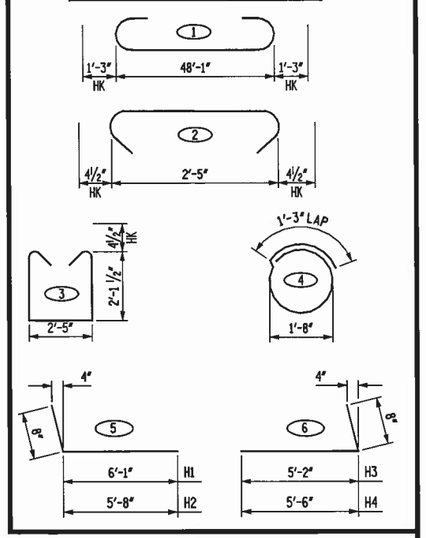

PROJECT NO. 42834
COUNTY: BURKE
STATION: 17+35.00
REPLACES BRIDGE NO. 118

STATE OF NORTH CAROLINA
DEPARTMENT OF TRANSPORTATION
RALEIGH

CAST - IN - PLACE
END BENT NO. 1 DETAILS

NOT TO SCALE

Florence & Hutcheson
CONSULTING ENGINEERS
5121 Kingdom Way, Suite 100 Raleigh, NC 27607
NC License No: F-0258

NORTH CAROLINA PROFESSIONAL SEAL 025490 ENGINEER JAMES E. MONDOLFI
E-9-10

REVISIONS						SHEET NO.
NO.	BY	DATE	NO.	BY	DATE	7
1			3			TOTAL SHEETS
2			4			30

DRAWN BY: B.L. MARIOTTE DATE: DEC 2009
CHECKED BY: J.C. KO DATE: DEC 2009

FILE NAME: p:\rivers\dot\17burke_37\sub38883\structures\U38_end7_118.dgn
PLOT: 2/8/2010 4:43:42 PM Ko & Associates, P.C.

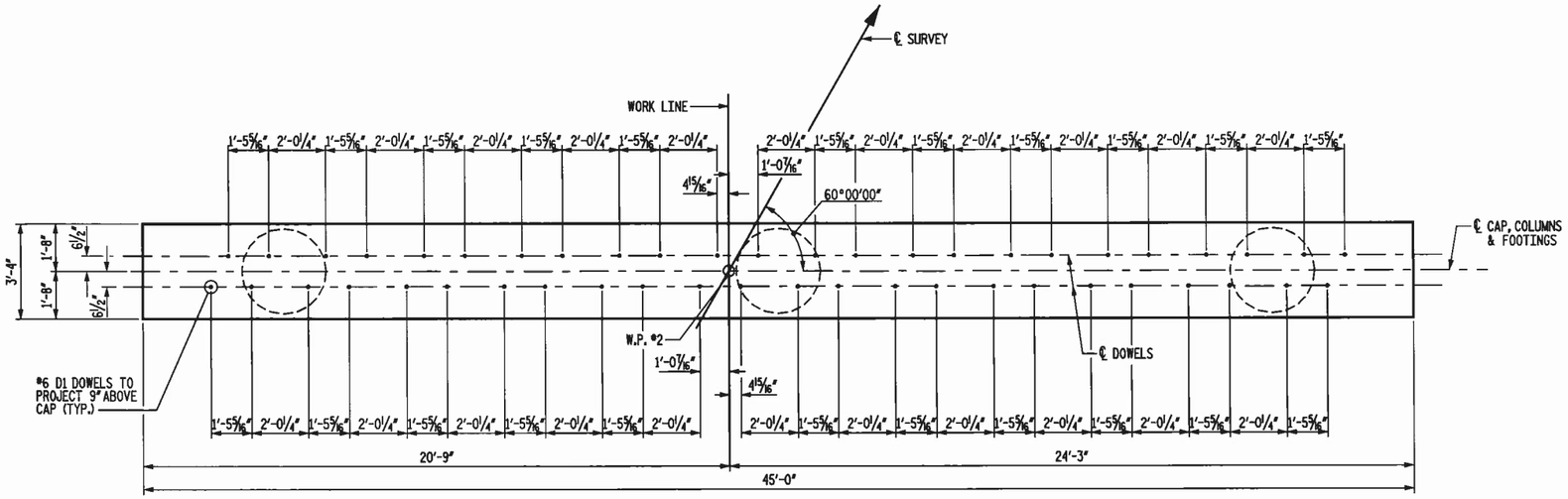

PLAN

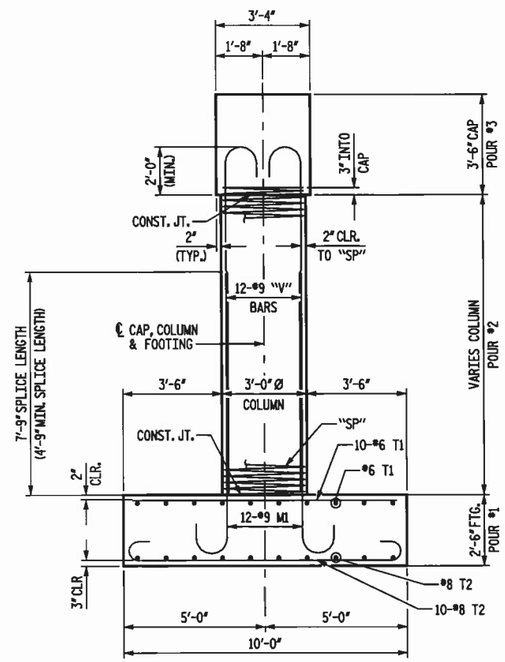

END ELEVATION

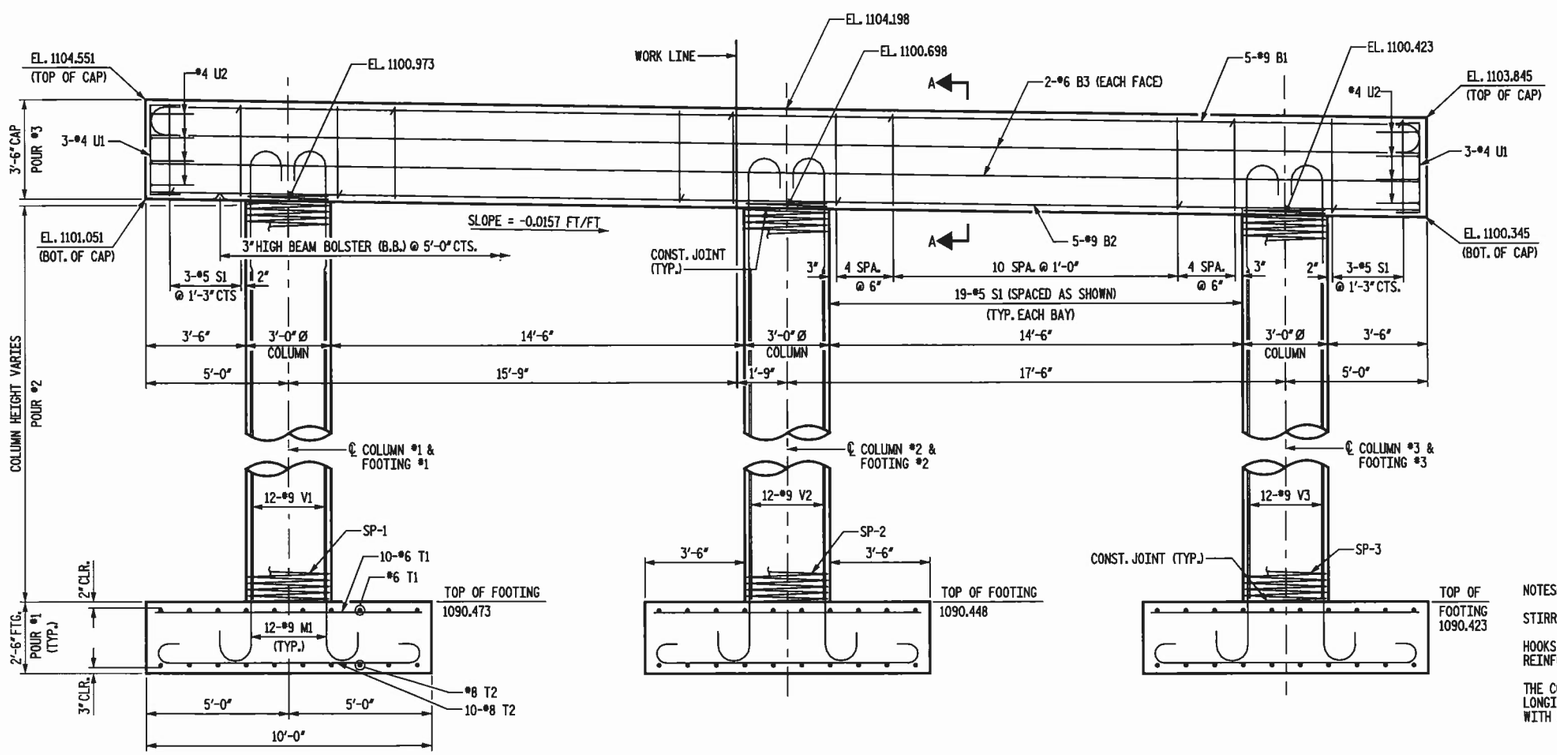

ELEVATION

DETAILS SHOWN FOR FOOTINGS ARE TYPICAL.

NOTE: INVERT ALTERNATE STIRRUPS IN CAP

NOT TO SCALE

COLUMN TABLE	
	HEIGHT
COLUMN #1	10'-6"
COLUMN #2	10'-3"
COLUMN #3	10'-0"

NOTES:

STIRRUPS MAY BE SHIFTED SLIGHTLY AS NECESSARY TO CLEAR DOWELS.

HOOKS ON "V" BARS MAY BE TURNED AS NECESSARY FOR PLACING REINFORCING STEEL.

THE CONTRACTOR'S ATTENTION IS CALLED TO THE FACT THAT THE LONGITUDINAL REINFORCEMENT FOR THE COLUMNS IS DETAILED WITH 3 FEET OF EXTRA LENGTH

PROJECT NO. 42834
COUNTY: BURKE
STATION: 17+35.00
REPLACES BRIDGE NO. 118

STATE OF NORTH CAROLINA
DEPARTMENT OF TRANSPORTATION
RALEIGH

CAST - IN - PLACE
INTERIOR BENT NO. 1

Florence & Hutcheson
CONSULTING ENGINEERS
5121 Kingsdom Way, Suite 100 Raleigh, NC 27607
NC License No: F-0258

NORTH CAROLINA PROFESSIONAL SEAL 20893 ENGINEER JAMES E. MONDOFI
2-9-10

REVISIONS						SHEET NO.
NO.	BY	DATE	NO.	BY	DATE	8
1			3			TOTAL SHEETS
2			4			30

DRAWN BY: B.L. MARIOTTE DATE: DEC 2009
CHECKED BY: J.C. KO DATE: DEC 2009

FILE NAME: p:\cons\div13\burke_38\bridge\bridge\U18_end4_1ft.dgn
PLOT: 2/9/2010 4:43:48 PM Fo & Associates, P.A.

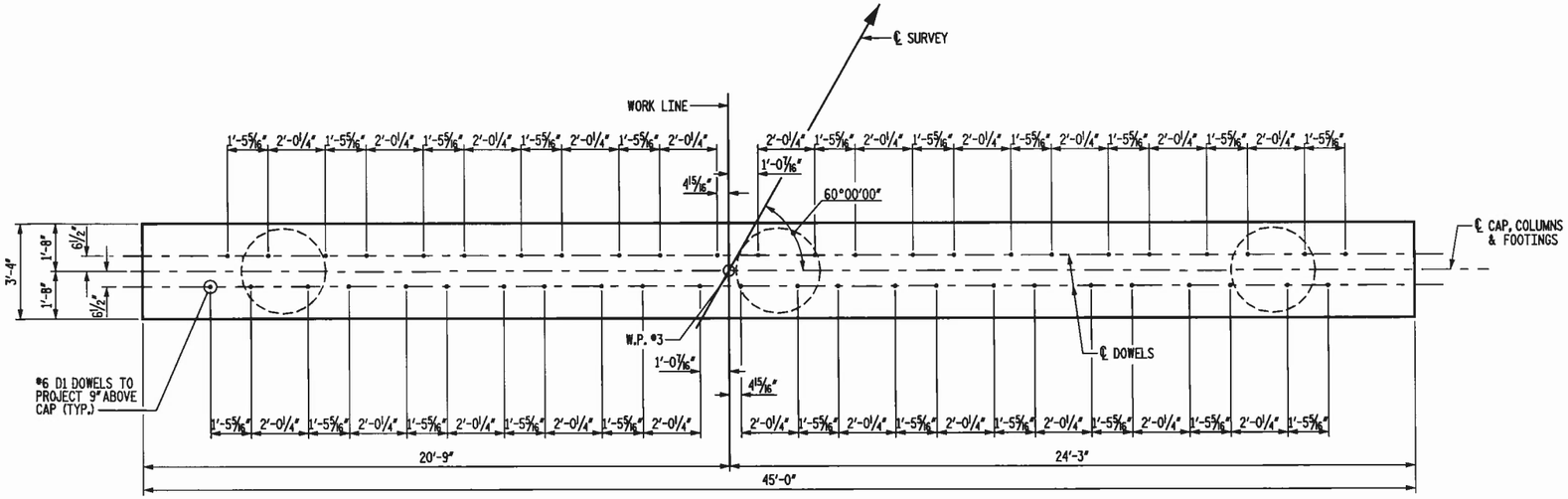

PLAN

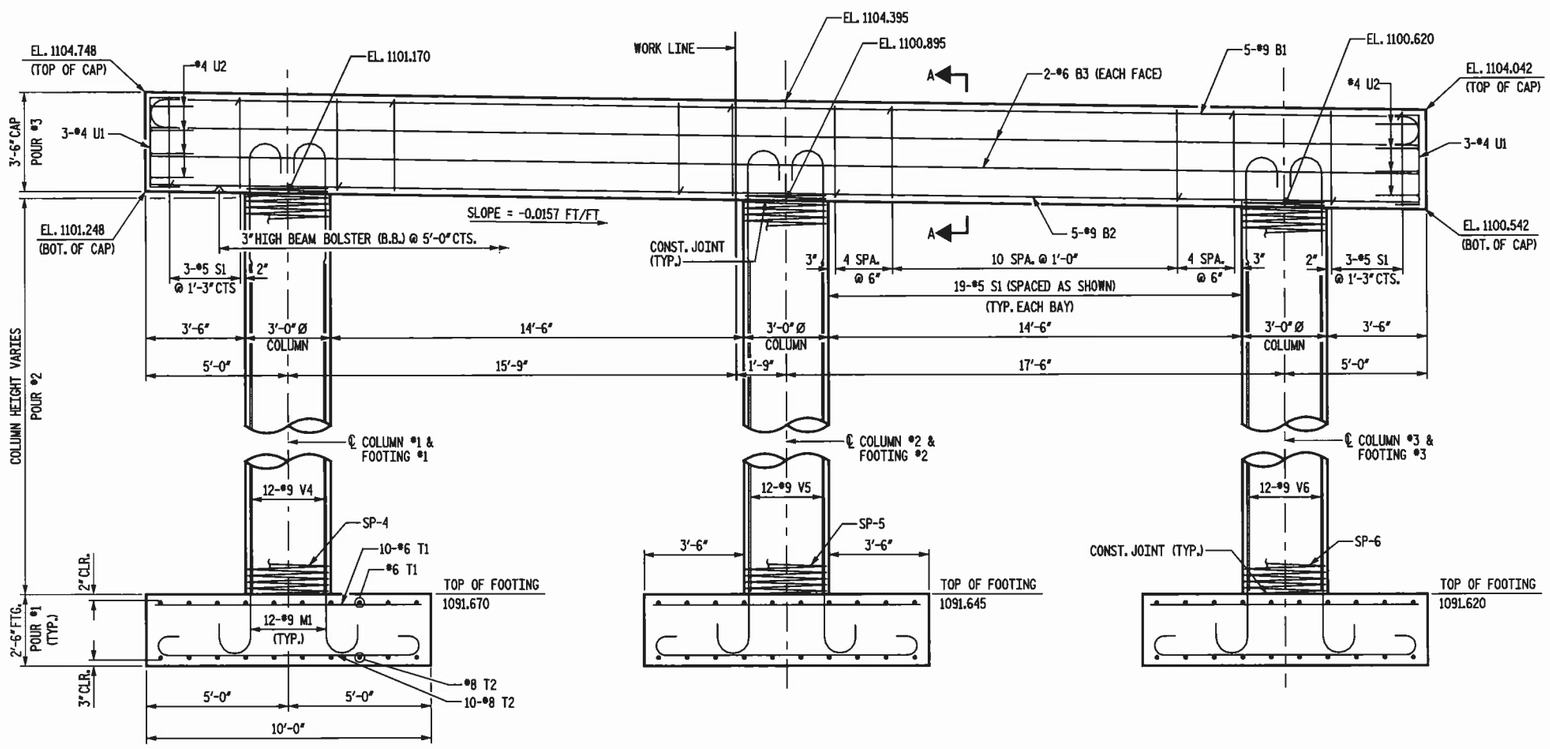

ELEVATION

DETAILS SHOWN FOR FOOTINGS ARE TYPICAL.

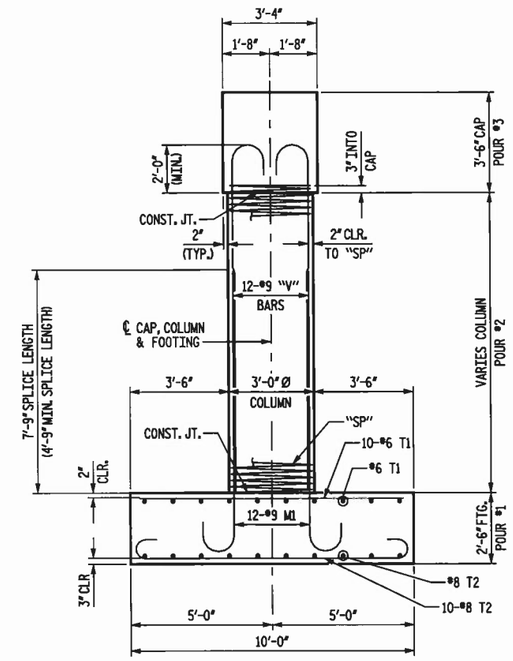

END ELEVATION

NOTES:

STIRRUPS MAY BE SHIFTED SLIGHTLY AS NECESSARY TO CLEAR DOWELS.

HOOKS ON "V" BARS MAY BE TURNED AS NECESSARY FOR PLACING REINFORCING STEEL.

THE CONTRACTOR'S ATTENTION IS CALLED TO THE FACT THAT THE LONGITUDINAL REINFORCEMENT FOR THE COLUMNS IS DETAILED WITH 3 FEET OF EXTRA LENGTH

COLUMN TABLE	
	HEIGHT
COLUMN #1	9'-6"
COLUMN #2	9'-3"
COLUMN #3	9'-0"

NOTE: INVERT ALTERNATE STIRRUPS IN CAP

NOT TO SCALE

PROJECT NO. 42834
COUNTY: BURKE
STATION: 17+35.00
REPLACES BRIDGE NO. 118

STATE OF NORTH CAROLINA
DEPARTMENT OF TRANSPORTATION
RALEIGH

CAST - IN - PLACE
INTERIOR BENT NO. 2

Florence & Hutcheson
CONSULTING ENGINEERS
5121 Kingdom Way, Suite 100 Raleigh, NC 27607
NC License No: F-0258

NORTH CAROLINA PROFESSIONAL SEAL 20532 ENGINEER JAMES E. MONDOR
2-9-10

REVISIONS						SHEET NO.
NO.	BY	DATE	NO.	BY	DATE	9
1			3			TOTAL SHEETS
2			4			30

DRAWN BY: B.L. MARIOTTE DATE: DEC 2009
CHECKED BY: J.C. KO DATE: DEC 2009

FILE NAME: p:\cases\dot\STructure_BP\ms\B5903\structures\U8_Art1_PM.dgn
PLOT: 2/9/2010 4:43:35 PM Ko & Associates, P.C.

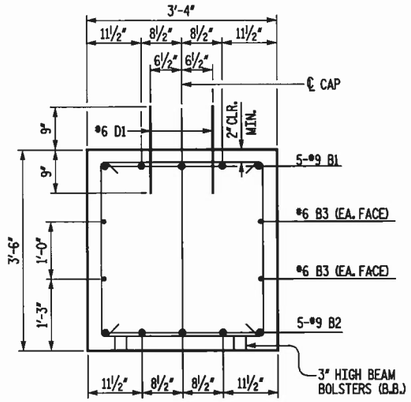

SECTION A-A

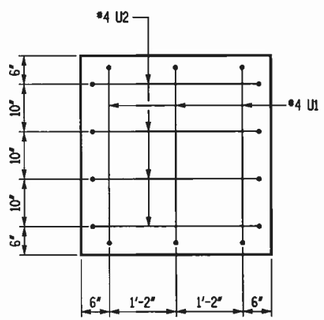

CAP END VIEW

BAR TYPES

ALL BAR DIMENSIONS ARE OUT TO OUT.

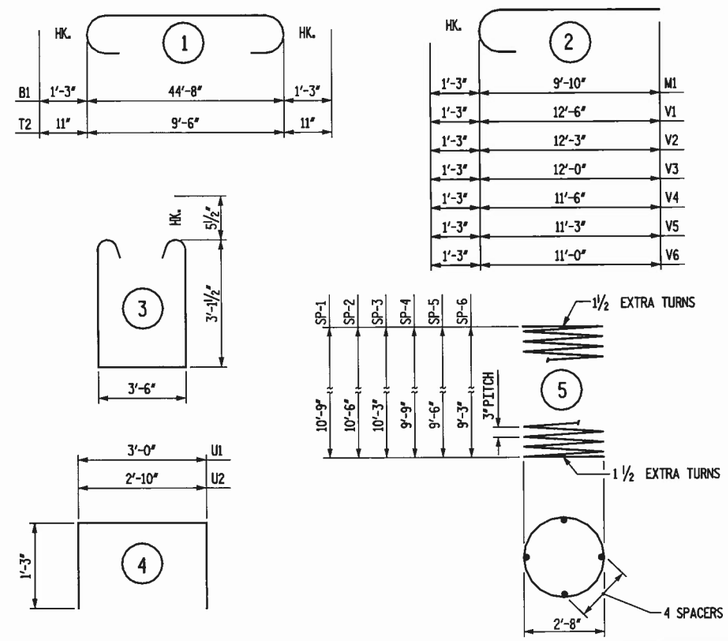

BILL OF MATERIAL

BENT #1

BAR	NO.	SIZE	TYPE	LENGTH	WEIGHT
B1	5	9	1	47'-2"	802
B2	5	9	STR	44'-8"	759
B3	4	6	STR	44'-8"	268
D1	48	6	STR	1'-6"	108
M1	36	9	2	11'-1"	1357
S1	44	5	3	10'-8"	490
T1	60	6	STR	9'-6"	856
T2	60	8	1	11'-4"	1816
U1	6	4	4	5'-6"	22
U2	8	4	4	5'-4"	29
V1	12	9	2	13'-9"	561
V2	12	9	2	13'-6"	551
V3	12	9	2	13'-3"	541

REINFORCING STEEL TOTAL 8,160 LB

SPIRAL COLUMN REINFORCING STEEL

BAR	NO.	SIZE	TYPE	LENGTH	WEIGHT
SP-1	1	**	5	379'-6"	254
SP-2	1	**	5	371'-3"	248
SP-3	1	**	5	363'-0"	242

SPIRAL COLUMN REINF. STEEL TOTAL 744 LB

POUR #1 FOOTING 27.8 CY
POUR #2 COLUMN 8.1 CY
POUR #3 CAP 19.4 CY
TOTAL CY 55.3

BENT #2

BAR	NO.	SIZE	TYPE	LENGTH	WEIGHT
B1	5	9	1	47'-2"	802
B2	5	9	STR	44'-8"	759
B3	4	6	STR	44'-8"	268
D1	48	6	STR	1'-6"	108
M1	36	9	2	11'-1"	1357
S1	44	5	3	10'-8"	490
T1	60	6	STR	9'-6"	856
T2	60	8	1	11'-4"	1816
U1	6	4	4	5'-6"	22
U2	8	4	4	5'-4"	29
V4	12	9	2	12'-9"	520
V5	12	9	2	12'-6"	510
V6	12	9	2	12'-3"	500

REINFORCING STEEL TOTAL 8,037 LB

SPIRAL COLUMN REINFORCING STEEL

BAR	NO.	SIZE	TYPE	LENGTH	WEIGHT
SP-4	1	**	5	346'-6"	231
SP-5	1	**	5	338'-3"	226
SP-6	1	**	5	330'-0"	220

SPIRAL COLUMN REINF. STEEL TOTAL 677 LB

POUR #1 FOOTING 27.8 CY
POUR #2 COLUMN 7.3 CY
POUR #3 CAP 19.4 CY
TOTAL CY 54.5

** NOTE: THE "SP" SPIRAL REINFORCING STEEL SHALL BE W20 OR D-20 COLD DRAWN WIRE OR #4 PLAIN OR DEFORMED BAR.

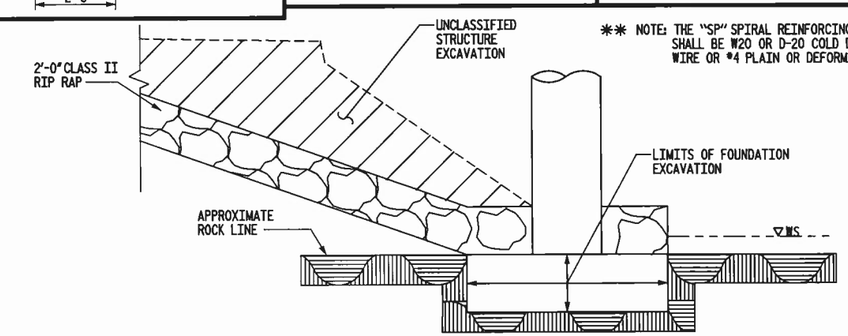

EXCAVATION AND EMBANKMENT

(BENT 1 SHOWN, BENT 2 SIMILAR)

NOTE:
CLASS II RIP RAP SHALL BE PAID FOR AT THE UNIT PRICE BID FOR CLASS II RIP RAP PER TON. FOUNDATION EXCAVATION COST SHALL BE INCLUDED IN THE LUMP SUM PRICE FOR EXCAVATION AND EMBANKMENT.

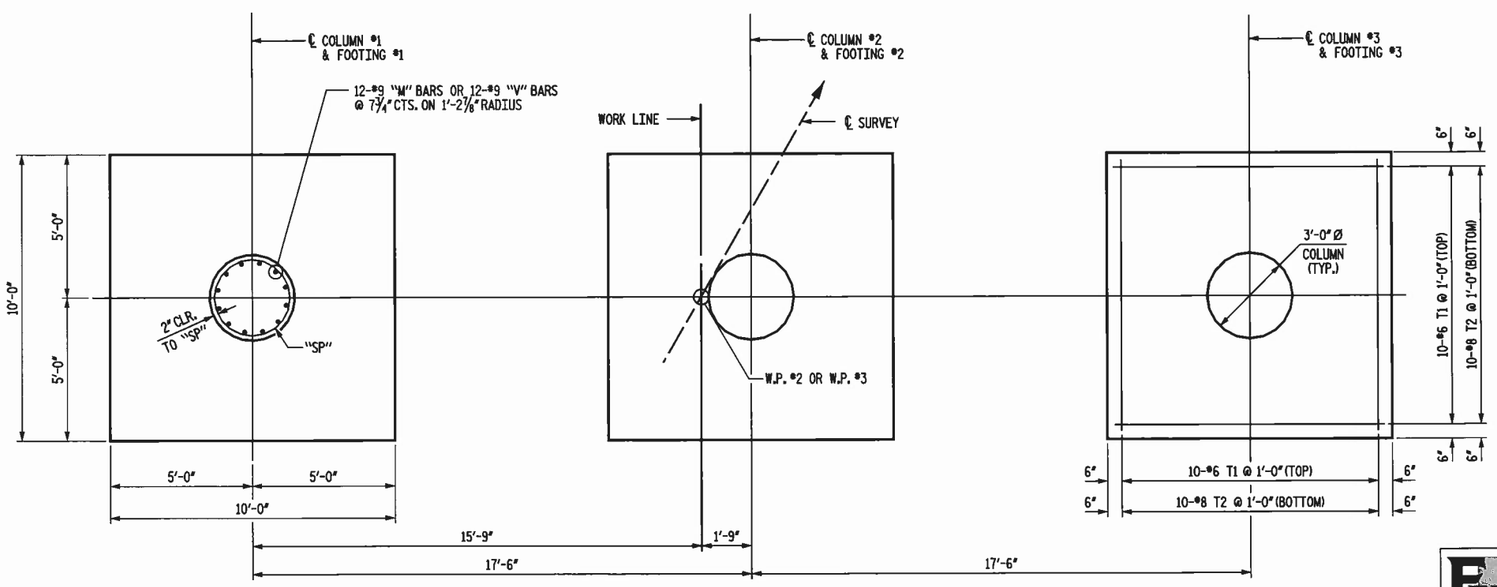

PLAN OF FOOTINGS

DETAILS SHOWN FOR FOOTINGS AND COLUMNS ARE TYPICAL.

NOT TO SCALE

PROJECT NO. 42834
COUNTY: BURKE
STATION: 17+35.00
REPLACES BRIDGE NO. 118

STATE OF NORTH CAROLINA
DEPARTMENT OF TRANSPORTATION
RALEIGH

CAST - IN - PLACE INTERIOR BENTS NO. 1 & NO. 2 DETAILS

Florence & Hutcheson
CONSULTING ENGINEERS
5121 Kingdom Way, Suite 100 Raleigh, NC 27607
NC License No: F-0258

NORTH CAROLINA PROFESSIONAL SEAL ENGINEER JAMES E. MONDOLFI
2-9-10

REVISIONS						SHEET NO.
NO.	BY	DATE	NO.	BY	DATE	10
1			3			TOTAL SHEETS
2			4			30

DRAWN BY: B.L. MARIOTTE DATE: DEC 2009
CHECKED BY: J.C. KO DATE: DEC 2009

FILE NAME: p:\roadwAY\Bridge\B-3879\B42834BB10\structure\U118_B42834_Y10.dgn
PLOT: 2/9/2010 4:43:11 PM Ko & Associates, P.C.

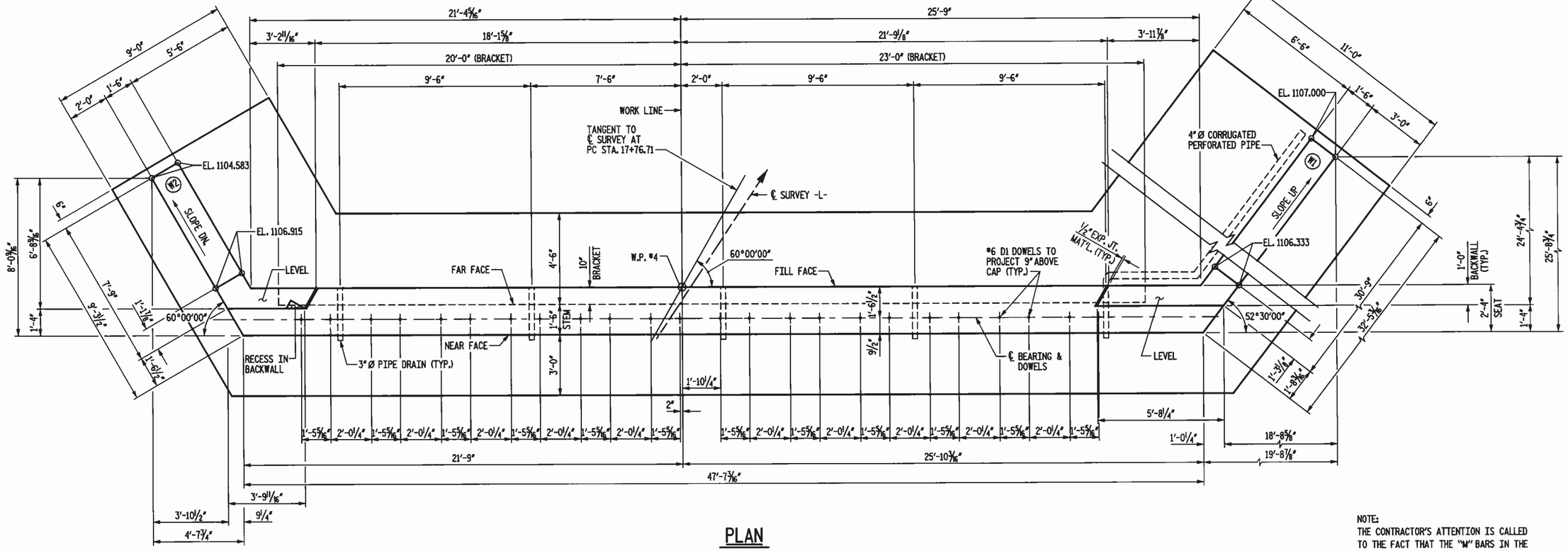

PLAN

NOTE:
THE CONTRACTOR'S ATTENTION IS CALLED TO THE FACT THAT THE "W" BARS IN THE ABUTMENT AND WINGWALLS ARE DETAILED WITH 3 FEET OF ADDITIONAL LENGTH.

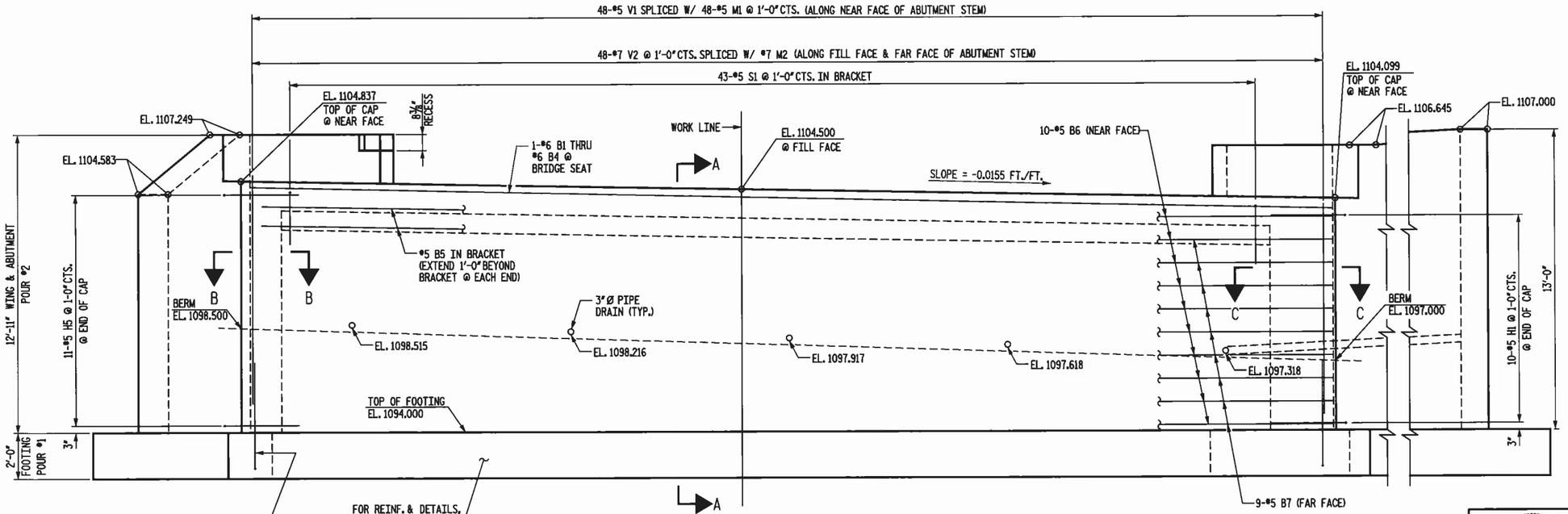

ELEVATION

NOT TO SCALE

PROJECT NO. 42834
COUNTY: BURKE
STATION: 17+35.00
REPLACES BRIDGE NO. 118

STATE OF NORTH CAROLINA
DEPARTMENT OF TRANSPORTATION
RALEIGH

CAST – IN – PLACE
ABUTMENT NO. 2

Florence & Hutcheson
CONSULTING ENGINEERS
5121 Kingdom Way, Suite 100 Raleigh, NC 27607
NC License No: F-0268

NORTH CAROLINA PROFESSIONAL SEAL 20537 ENGINEER JAMES E. MONDOLFI
2-9-10

REVISIONS						SHEET NO.
NO.	BY	DATE	NO.	BY	DATE	11
1			3			TOTAL SHEETS
2			4			30

DRAWN BY: B.L. MARIOTTE DATE: DEC 2009
CHECKED BY: J.E. MONDOLFI DATE: DEC 2009

FILE NAME: p:\roads\dh\STUcurve_BR\mid\BRIDGE\structures\U10_abut1.PM.dgn
PLOT: 2/9/2010 4:43:41 PM K. & Associates, P.C.

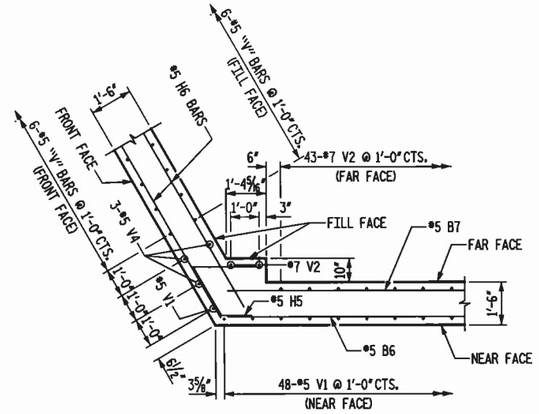

SECTION B-B

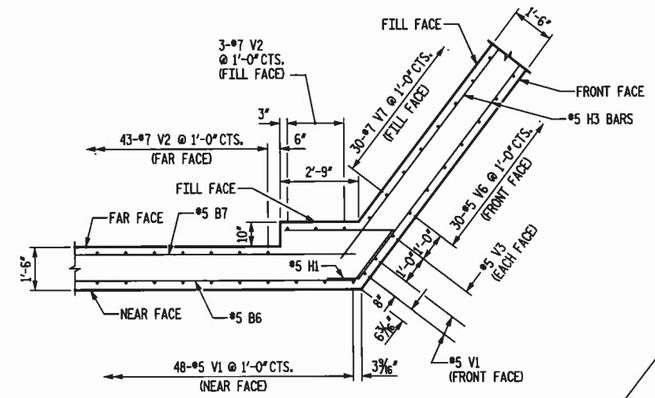

SECTION C-C

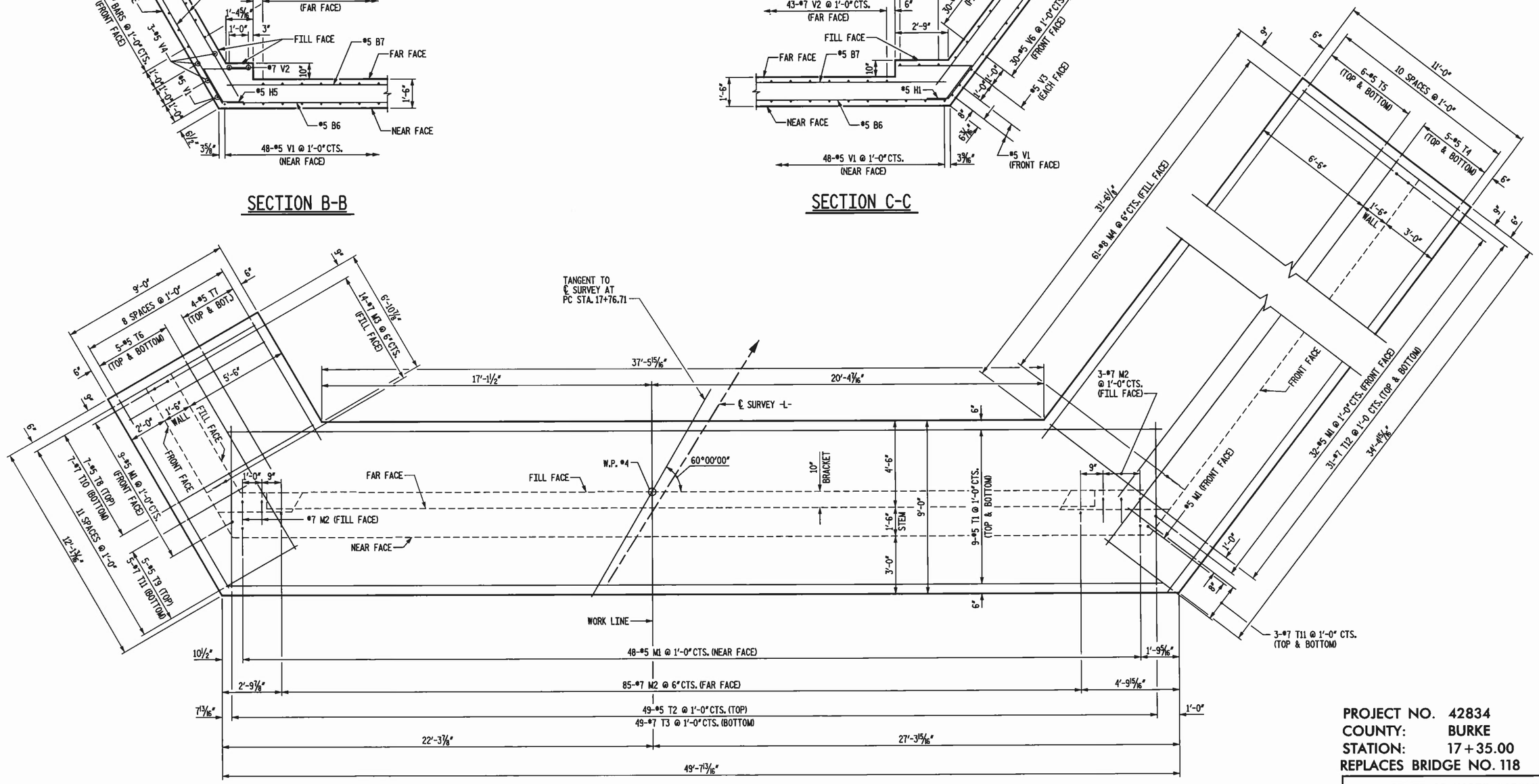

FOOTING PLAN - ABUTMENT NO. 2

PROJECT NO. 42834
COUNTY: BURKE
STATION: 17+35.00
REPLACES BRIDGE NO. 118

STATE OF NORTH CAROLINA
DEPARTMENT OF TRANSPORTATION
RALEIGH

CAST – IN – PLACE
ABUTMENT NO. 2 DETAILS

Florence & Hutcheson
CONSULTING ENGINEERS
5121 Kingdom Way, Suite 100 Raleigh, NC 27607
NC License No: F-0258

NORTH CAROLINA PROFESSIONAL SEAL 20290 ENGINEER JAMES E. MONDOLFI
2-9-10

REVISIONS						SHEET NO.
NO.	BY	DATE	NO.	BY	DATE	12
1			3			TOTAL SHEETS
2			4			30

DRAWN BY: B.L. MARIOTTE DATE: DEC 2009
CHECKED BY: J.C. KO DATE: DEC 2009

NOT TO SCALE

FILE NAME: p:\roms\03\03\burke_39\sub1\BRIDGE\structures\U18_ab02_N.dgn
PLOT: 2/9/2010 4:43:16 PM Ko & Associates, P.C.

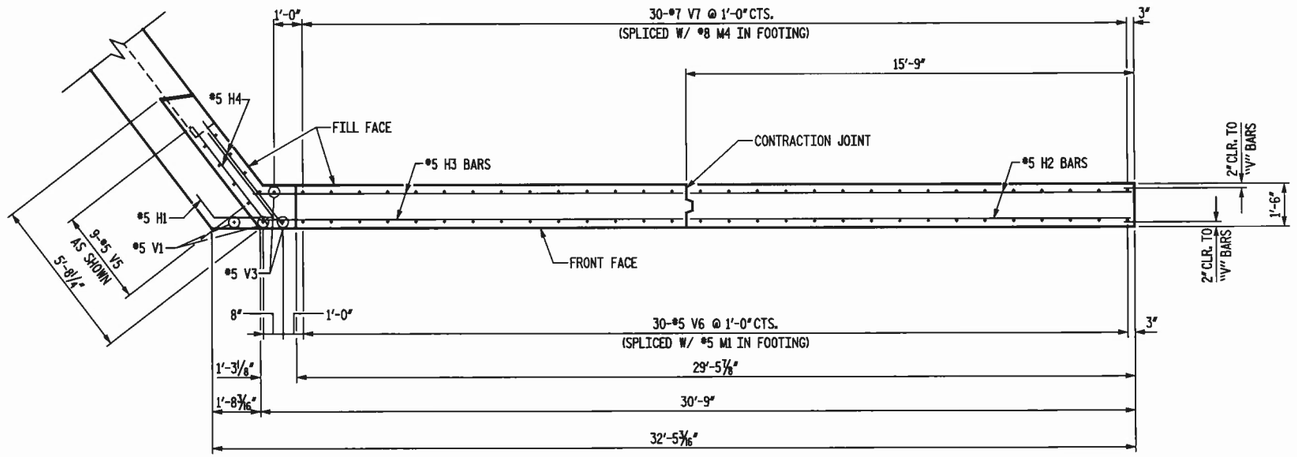

PLAN OF WING - W1

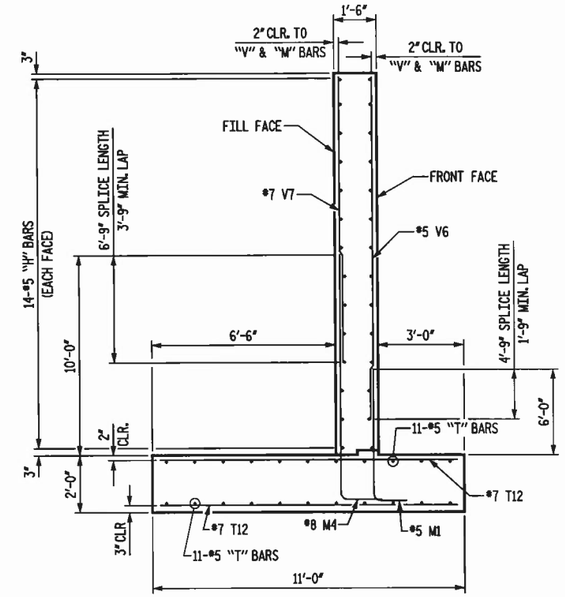

SECTION D-D

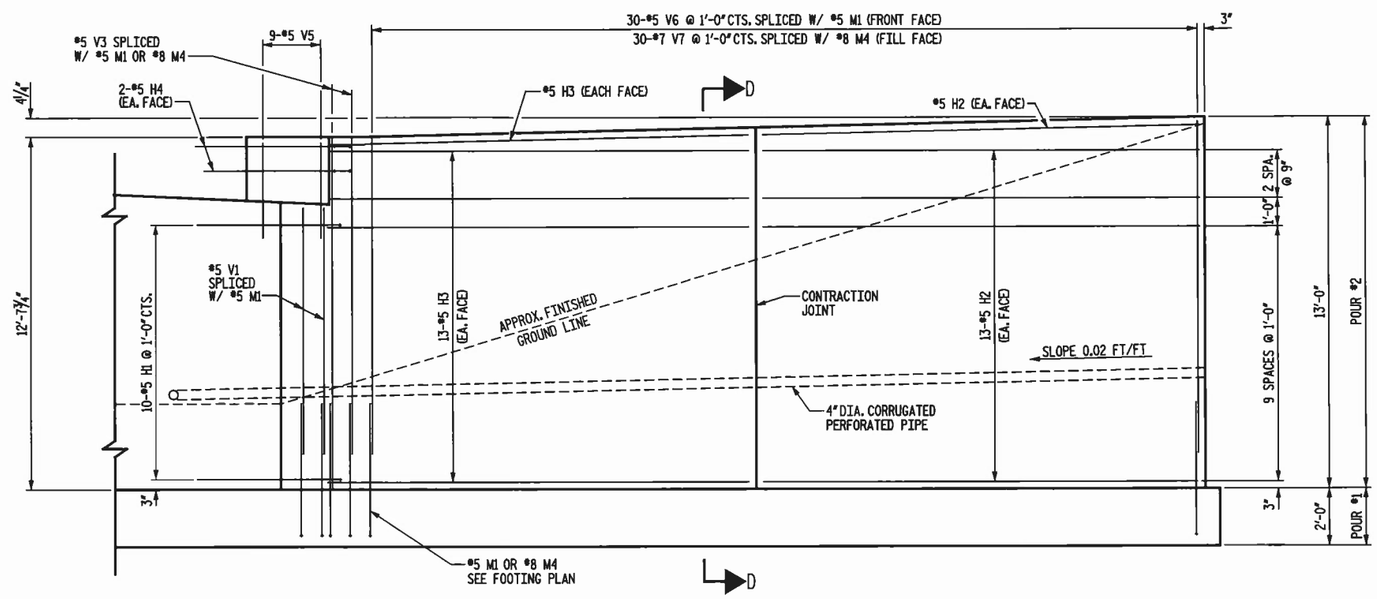

ELEVATION OF WING - W1

NOT TO SCALE

PROJECT NO. 42834
COUNTY: BURKE
STATION: 17+35.00
REPLACES BRIDGE NO. 118

STATE OF NORTH CAROLINA
DEPARTMENT OF TRANSPORTATION
RALEIGH

CAST – IN – PLACE
ABUTMENT NO. 2 – WING W1

Florence & Hutcheson
CONSULTING ENGINEERS
5121 Kingdom Way, Suite 100 Raleigh, NC 27607
NC License No: F-0258

NORTH CAROLINA PROFESSIONAL SEAL 20532 ENGINEER JAMES E. HONDOROS
2-9-10

REVISIONS						SHEET NO.
NO.	BY	DATE	NO.	BY	DATE	13
1			3			TOTAL SHEETS
2			4			30

DRAWN BY: B.L. MARIOTTE DATE: DEC 2009
CHECKED BY: J.C. KO DATE: DEC 2009

FILE NAME: p:\cons\di\d37\du42834_BR\mdl\BRIDGE\structures\U18_struct01_Rdgn
PLOT: 2/9/2010 4:43:18 PM Ko & Associates, P.C.

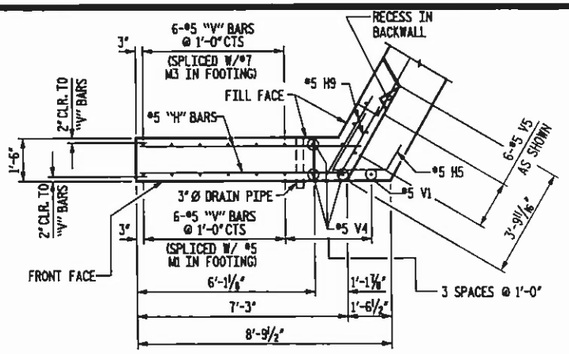

PLAN OF WING - W2

NOTE: SHIFT, FIELD BEND OR CUT REINFORCING STEEL AS NECESSARY TO CLEAR RECESS IN TOP OF BACKWALL.

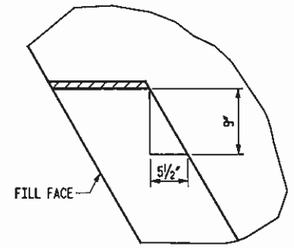

DETAIL OF RECESS IN TOP OF BACKWALL AT WING W2

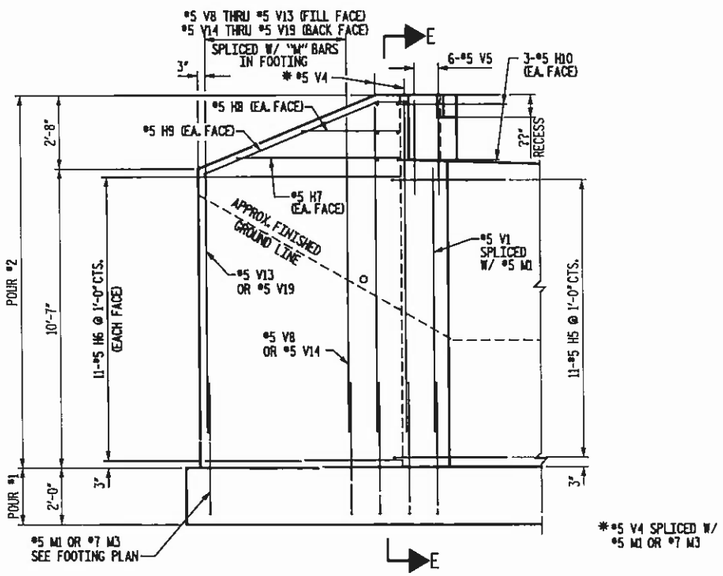

ELEVATION OF WING - W2

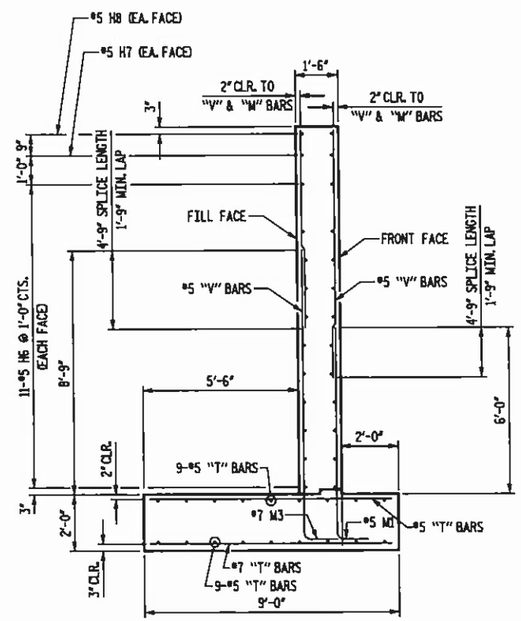

SECTION E-E

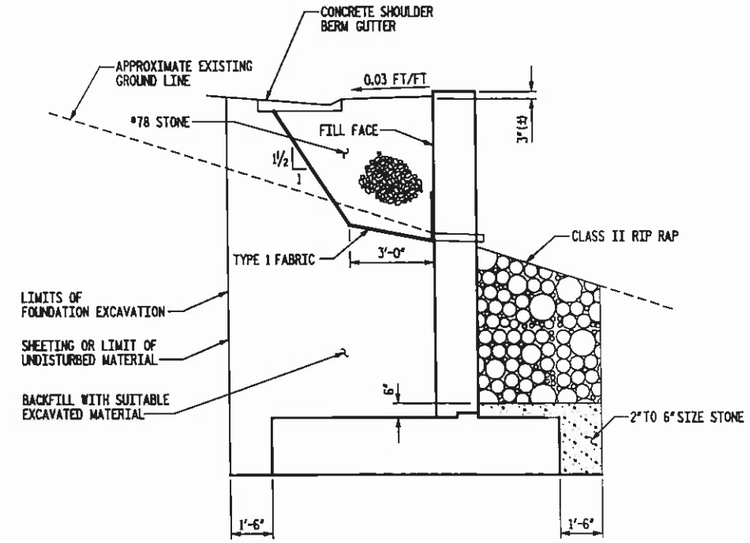

1 EXCAVATION AND EMBANKMENT AT WING W1

NOTES FOR SUBSTRUCTURE SCOUR PROTECTION

SUBSTRUCTURE SCOUR PROTECTION SHALL BE PROVIDED AS INDICATED IN THE PLANS. THE TWO TO SIX INCH SIZE STONE SHALL BE PLACED AFTER FOOTING FORMWORK HAS BEEN REMOVED. THE RIP RAP STONE SHALL BE PLACED BEFORE SHEETING IS REMOVED. WHEN NO SHEETING IS USED, EACH STONE TYPE SHALL BE PLACED TO THE REQUIRED THICKNESS AND SHALL EXTEND HORIZONTALLY TO THE UNDISTURBED MATERIAL.

THE TWO TO SIX INCH SIZE SCOUR PROTECTION STONE SHALL BE HARD AND DURABLE IN NATURE. WHILE NO SPECIFIC GRADATION IS REQUIRED THE VARIOUS SIZES OF STONE SHALL BE REASONABLY EQUALLY DISTRIBUTED WITHIN THE REQUIRED SIZE RANGE. THE STONE SHALL BE ESSENTIALLY CUBICAL IN SHAPE.

BASIS OF PAYMENT

THE ENTIRE COST OF THE ABOVE WORK INCLUDING THE TWO TO SIX INCH SIZE STONE, MATERIALS, EQUIPMENT, TOOLS, LABOR AND INCIDENTALS NECESSARY TO COMPLETE THE WORK SHALL BE INCLUDED IN THE LUMP SUM PRICE BID FOR PLACEMENT OF SUBSTRUCTURE. CLASS II RIP RAP SHALL BE PAID FOR AT THE UNIT PRICE BID FOR CLASS II RIP RAP PER TON.

2 #78 STONE BACKFILL AND FABRIC SHALL BE INCLUDED IN THE LUMP SUM PRICE BID FOR APPROACH SLABS.

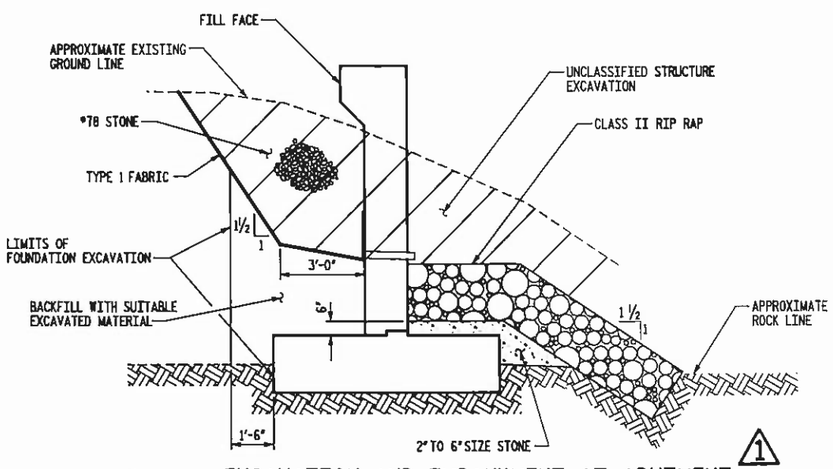

1 EXCAVATION AND EMBANKMENT AT ABUTMENT

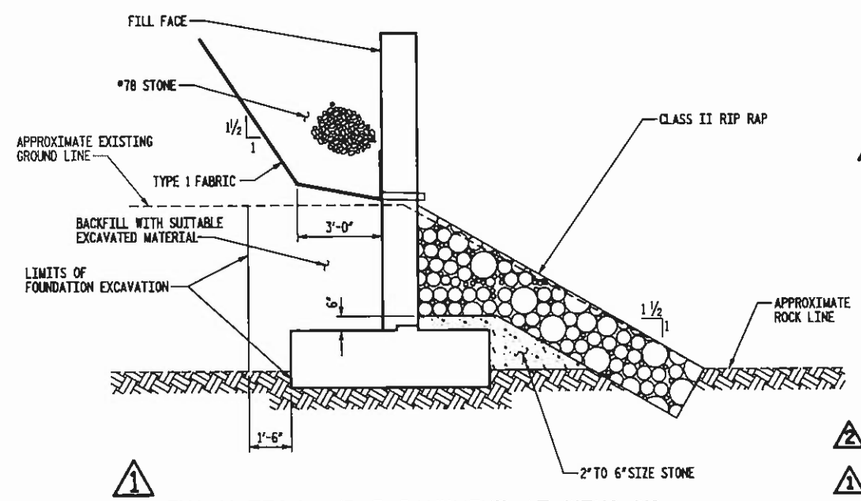

1 EXCAVATION AND EMBANKMENT AT WING W2

2 ADDED NOTE

1 REVISED EXCAVATION AND EMBANKMENT DETAILS

PROJECT NO. 42834
COUNTY: BURKE
STATION: 17+35.00
REPLACES BRIDGE NO. 118

STATE OF NORTH CAROLINA
DEPARTMENT OF TRANSPORTATION
RALEIGH

CAST - IN - PLACE
ABUTMENT NO. 2 DETAILS

NOT TO SCALE

Florence & Hutcheson
CONSULTING ENGINEERS
5121 Kingdom Way, Suite 100 Raleigh, NC 27607
NC License No F-0258

NORTH CAROLINA PROFESSIONAL SEAL 20537 JAMES E. MONDOWNEY
9-29-10

REVISIONS						SHEET NO.
NO.	BY	DATE	NO.	BY	DATE	14
1	JEM	8-18-10	3			TOTAL SHEETS
2	JEM	9-29-10	4			30

DRAWN BY: B.L. MARIOTTE DATE: DEC 2009
CHECKED BY: J.C. KO DATE: DEC 2009

FILE NAME: P:\DGN\Gs-07\Bridge\BRIDGE\Structures\U8_Wing.dgn
PLOT: 9/29/2010 10:48:49 AM Xs & Associates, P.C.

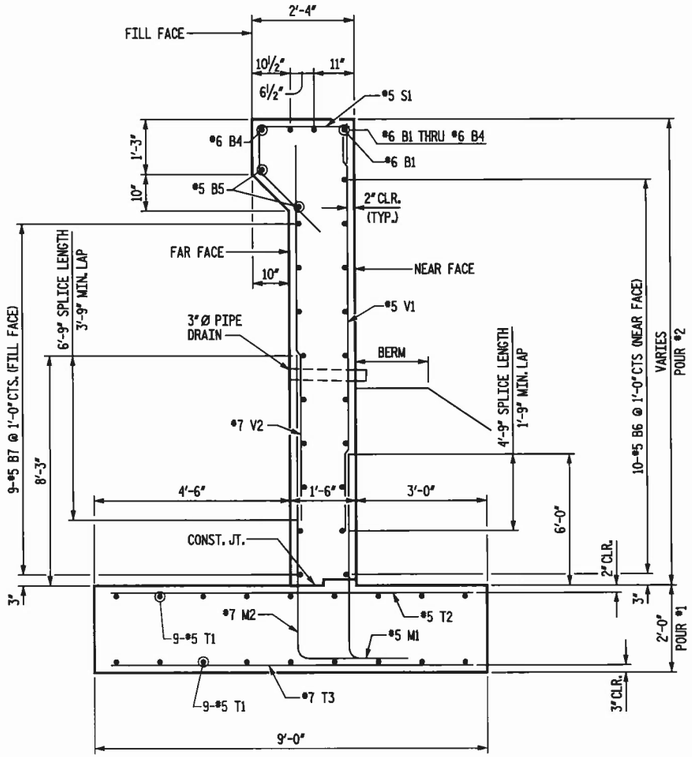

SECTION A-A

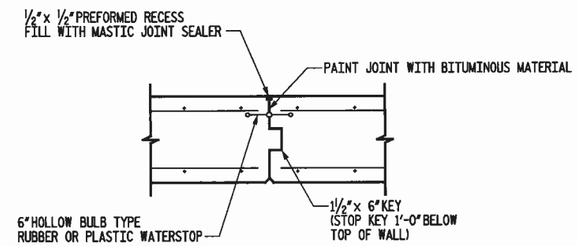

CONTRACTION JOINT DETAIL

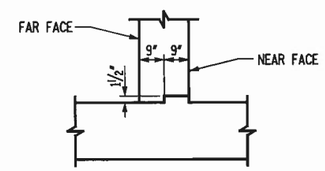

SHEAR KEY DETAIL AT BOTTOM OF STEM

BAR TYPES

ALL BAR DIMENSIONS ARE OUT TO OUT.

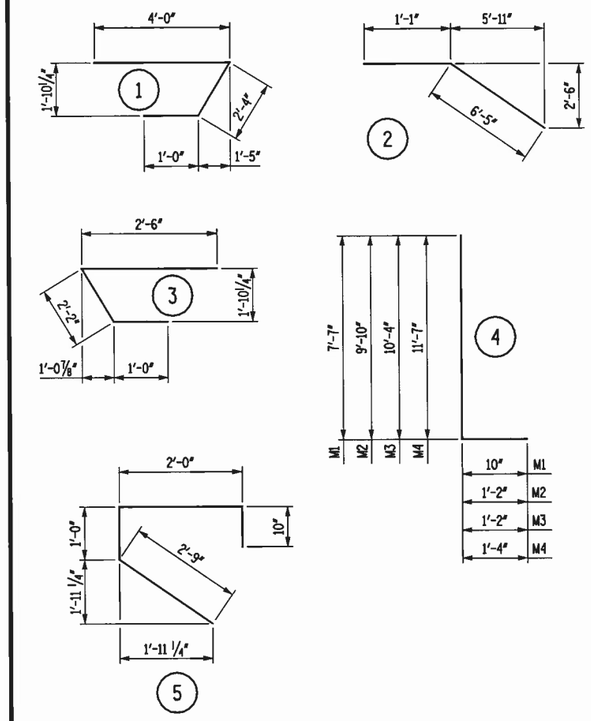

BILL OF MATERIAL

ABUTMENT NO. 2

BAR	NO.	SIZE	TYPE	LENGTH	WEIGHT
B1	1	6	STR	47'-4"	71
B2	1	6	STR	48'-3"	72
B3	1	6	STR	49'-0"	74
B4	1	6	STR	49'-10"	75
B5	2	5	STR	45'-0"	94
B6	10	5	STR	47'-4"	494
B7	9	5	STR	48'-8"	457
D1	24	6	STR	1'-6"	54
H1	10	5	1	7'-4"	76
H2	28	5	STR	15'-5"	450
H3	28	5	STR	16'-2"	472
H4	4	5	STR	4'-3"	18
H5	11	5	3	5'-8"	65
H6	22	5	STR	8'-4"	191
H7	2	5	STR	4'-0"	8
H8	2	5	2	7'-6"	16
H9	4	5	STR	2'-7"	11
M1	90	5	4	8'-5"	790
M2	90	7	4	11'-0"	2024
M3	14	7	4	11'-6"	329
M4	61	8	4	12'-11"	2104
S1	43	5	5	6'-7"	295
T1	18	5	STR	49'-0"	920
T2	49	5	STR	8'-6"	434
T3	49	7	STR	8'-6"	851
T4	10	5	STR	34'-0"	355
T5	12	5	STR	31'-6"	394
T6	10	5	STR	11'-6"	120
T7	8	5	STR	7'-6"	63
T8	7	5	STR	8'-6"	62
T9	5	5	STR	4'-6"	23
T10	7	7	STR	8'-6"	122
T11	11	7	STR	4'-6"	101
T12	62	7	STR	10'-6"	1331
V1	51	5	STR	9'-5"	501
V2	48	7	STR	8'-0"	785
V3	2	5	STR	10'-11"	23
V4	3	5	STR	11'-6"	36
V5	15	5	STR	3'-4"	52
V6	30	5	STR	11'-7"	362
V7	30	7	STR	9'-7"	588
V8	1	5	STR	9'-4"	10
V9	1	5	STR	8'-11"	9
V10	1	5	STR	8'-6"	9
V11	1	5	STR	8'-1"	8
V12	1	5	STR	7'-8"	8
V13	1	5	STR	7'-3"	8
V14	1	5	STR	11'-1"	12
V15	1	5	STR	10'-8"	11
V16	1	5	STR	10'-3"	11
V17	1	5	STR	9'-10"	10
V18	1	5	STR	9'-5"	10
V19	1	5	STR	9'-0"	9
REINFORCING STEEL TOTAL				15,478	LB

POUR #1	62.2	CY
POUR #2	59.9	CY
TOTAL	122.1	CY

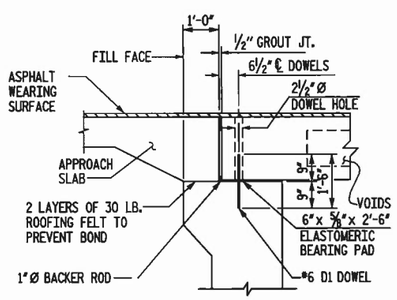

DOWEL LOCATION DETAIL

NOTE: ℄ OF DOWELS SHALL MATCH ℄ OF DOWEL HOLES IN CORED SLAB UNITS.

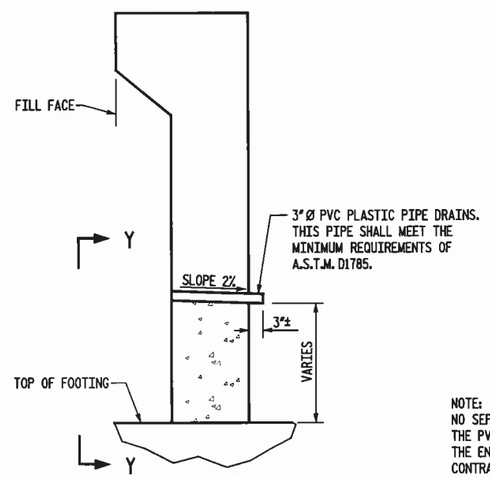

SECTION THRU ABUTMENT STEM

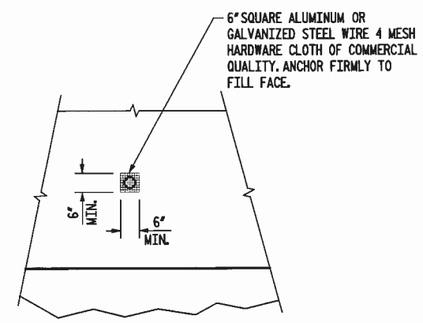

VIEW Y-Y

NOTE:
NO SEPARATE PAYMENT WILL BE MADE FOR FURNISHING AND INSTALLING THE PVC PLASTIC PIPE DRAINS, HARDWARE CLOTH AND FASTENERS. THE ENTIRE COST OF THIS WORK SHALL BE INCLUDED IN THE UNIT CONTRACT PRICE FOR THE SEVERAL PAY ITEMS.

PIPE DRAIN DETAILS

NOT TO SCALE

PROJECT NO. 42834
COUNTY: BURKE
STATION: 17+35.00
REPLACES BRIDGE NO. 118

STATE OF NORTH CAROLINA
DEPARTMENT OF TRANSPORTATION
RALEIGH

CAST – IN – PLACE
ABUTMENT NO. 2 DETAILS

Florence & Hutcheson
CONSULTING ENGINEERS
5121 Kingdom Way, Suite 100 Raleigh, NC 27607
NC License No: F-0258

NORTH CAROLINA PROFESSIONAL SEAL 019 ENGINEER JAMES E. MONDOLFI
2-9-10

REVISIONS						SHEET NO.
NO.	BY	DATE	NO.	BY	DATE	15
1			3			TOTAL SHEETS
2			4			30

DRAWN BY: B.L. MARIOTTE DATE: DEC 2009
CHECKED BY: J.C. KO DATE: DEC 2009

FILE NAME: p:\cons\bin25\burke_39\ab38BS\ur-surcrw-\UL_ab38_Y1.dgn
PLOT: 2/9/2010 4:43:24 PM Ko & Associates, P.C.

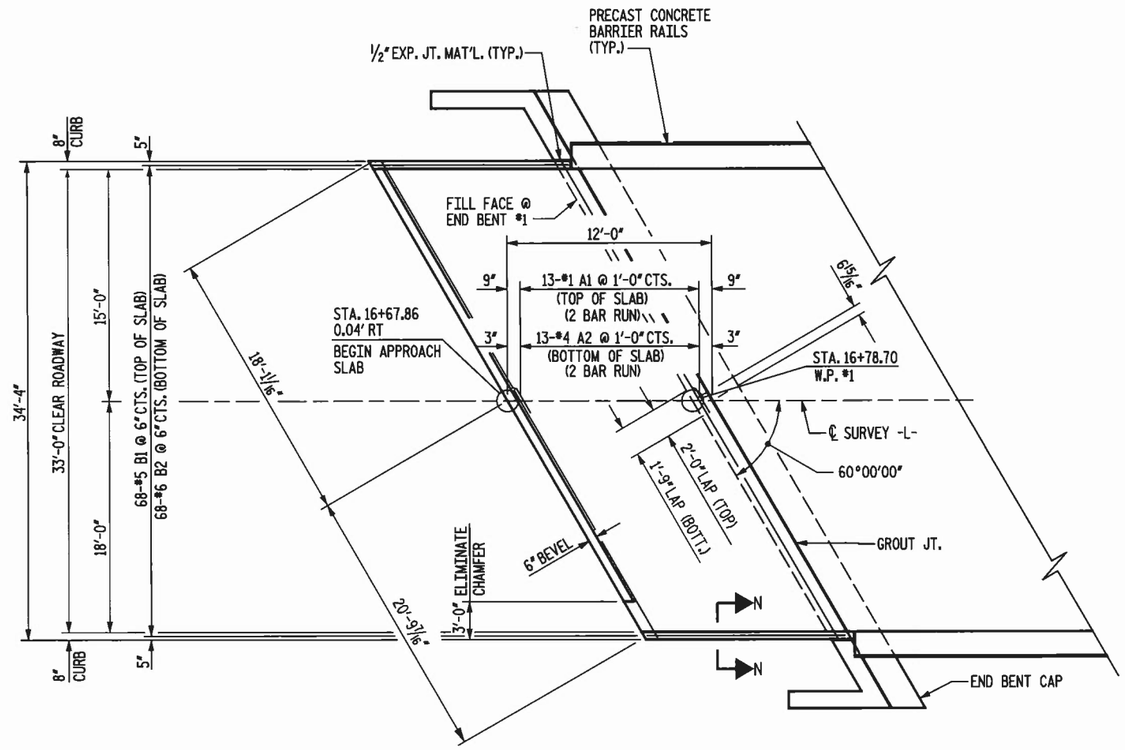

AT END BENT #1

PLAN OF APPROACH SLAB

NOTES

FOR BRIDGE APPROACH FILL INCLUDING FABRIC, 4"Ø DRAINAGE PIPE, AND #78M STONE BACKFILL, SEE BRIDGE APPROACH FILLS, SHEET 19.

APPROACH SLAB SHALL NOT BE CONSTRUCTED PRIOR TO INSTALLATION OF CORED SLAB.

FABRIC SHALL BE TYPE 1 ENGINEERING FABRIC IN ACCORDANCE WITH THE STANDARD SPECIFICATIONS SECTION 1056.

#78M STONE BACKFILL (CLASS V SELECT MATERIAL) SHALL BE IN ACCORDANCE WITH STANDARD SPECIFICATIONS SECTION 1016.

#78M STONE BACKFILL IS TO BE CONTINUOUS ALONG FILL FACE OF END BENT CAP FROM OUTSIDE EDGE TO OUTSIDE EDGE OF APPROACH SLAB.

FOR THE 4"Ø DRAINAGE PIPE OUTLET(S), SEE BRIDGE APPROACH FILLS, SHEET 17.

AREA BETWEEN THE WINGWALL AND APPROACH SLAB SHALL BE GRADED TO DRAIN THE WATER AWAY FROM THE FILL FACE OF THE BRIDGE AND SHALL BE PAVED.

THE 6" COMP. A.B.C. SHALL BE FLUSH WITH THE ROADWAY END OF THE APPROACH SLAB AND SHALL EXTEND 1'-0" OUTSIDE OF EACH EDGE OF THE APPROACH SLAB.

THE CONTRACTOR MAY USE 4" TYPE B-25.0B ASPHALT CONCRETE BASE COURSE IN LIEU OF 6" COMP. A.B.C. IF THIS OPTION IS USED, THE BASE COURSE SHALL BE FLUSH WITH THE ROADWAY END OF THE APPROACH SLAB, AND THE WIDTH SHALL BE THE SAME AS THAT OF THE APPROACH SLAB.

THE CONTRACTOR MAY USE 5" CLASS "A" CONCRETE BASE IN LIEU OF 6" COMP. A.B.C. IF THIS OPTION IS USED, THE CONCRETE BASE SHALL BE FLUSH WITH THE ROADWAY END OF THE APPROACH SLAB, AND THE WIDTH SHALL BE THE SAME AS THAT OF THE APPROACH SLAB. THE CONCRETE SHALL BE FINISHED TO A SMOOTH SURFACE AND A LAYER OF 30 LB ROOFING FELT SHALL BE PLACED BETWEEN THE CONCRETE BASE AND THE APPROACH SLAB TO PREVENT BOND. THE APPROACH SLAB SHALL NOT BE CAST UNTIL THE CONCRETE BASE HAS REACHED AN AGE OF THREE CURING DAYS.

FOR JOINT DETAILS, SEE "PRESTRESSED CONCRETE CORED SLAB UNIT" SHEETS.

THE JOINT AT THE END BENT SHALL BE GROUTED AS SOON AS PRACTICAL AFTER THE CONSTRUCTION OF THE APPROACH SLABS.

APPROACH SLAB GROOVING IS NOT REQUIRED.

#78 STONE BACKFILL, 4"Ø DRAINAGE PIPE AND FABRIC SHALL BE INCLUDED IN THE LUMP SUM PRICE BID FOR APPROACH SLABS.

BILL OF MATERIAL

APPROACH SLAB AT END BENT #1

BAR	NO.	SIZE	TYPE	LENGTH	WEIGHT
* A1	26	#4	STR	20'-8"	359
A2	26	#4	STR	20'-6"	356
* B1	68	#5	STR	11'-1"	786
B2	68	#6	STR	11'-7"	1,183
REINFORCING STEEL				LBS.	1,539
* EPOXY COATED REINFORCING STEEL				LBS.	1,145
CLASS AA CONCRETE				C. Y.	17.6

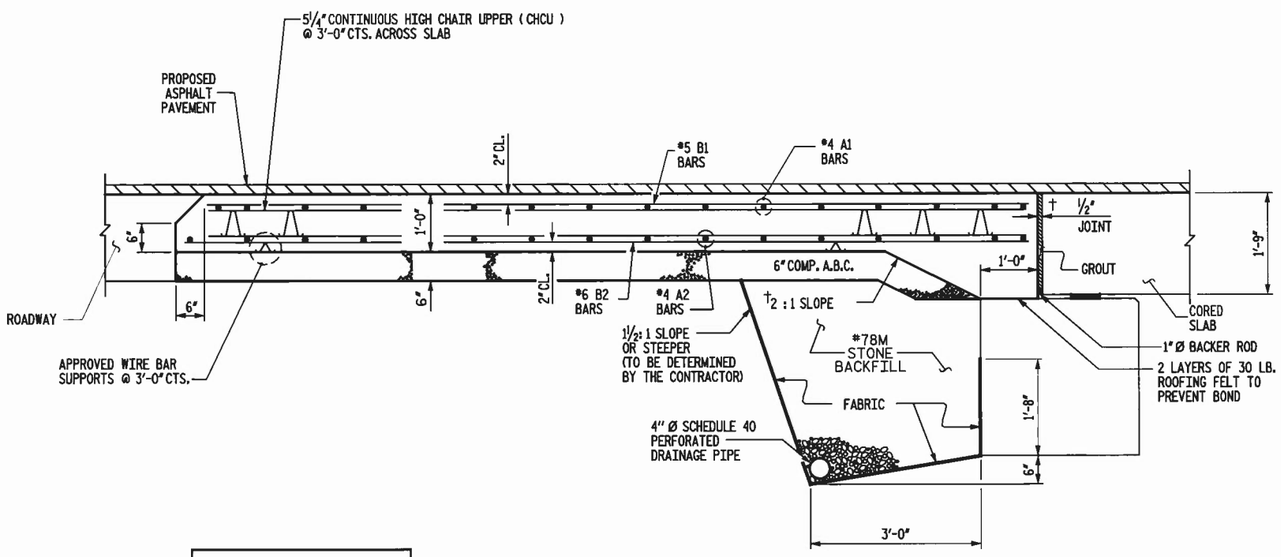

† NORMAL TO END BENT

SECTION THRU SLAB

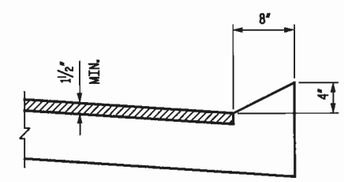

SECTION N-N

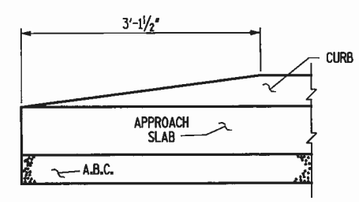

END OF CURB WITHOUT SHOULDER BERM GUTTER

CURB DETAILS

NOT TO SCALE

PROJECT NO. 42834
COUNTY: BURKE
STATION: 17+35.00
REPLACES BRIDGE NO. 118

STATE OF NORTH CAROLINA
DEPARTMENT OF TRANSPORTATION
RALEIGH

APPROACH SLAB AT END BENT #1

Florence & Hutcheson
CONSULTING ENGINEERS
5121 Kingdom Way, Suite 100 Raleigh, NC 27607
NC License No: F-0258

NORTH CAROLINA PROFESSIONAL SEAL 29530 ENGINEER JAMES E. MONDOLFI
2-9-10

REVISIONS						SHEET NO.
NO.	BY	DATE	NO.	BY	DATE	16
1			3			TOTAL SHEETS
2			4			30

DRAWN BY: B.L. MARIOTTE DATE: DEC 2009
CHECKED BY: J.E. MONDOLFI DATE: DEC 2009

FILE NAME: p:\roads\dot20\bunkie_20\mail20800\structure\U18_A4c18_N1.dgn
PLOT: 2/9/2010 4:43:26 PM Xo & Associates, P.C.

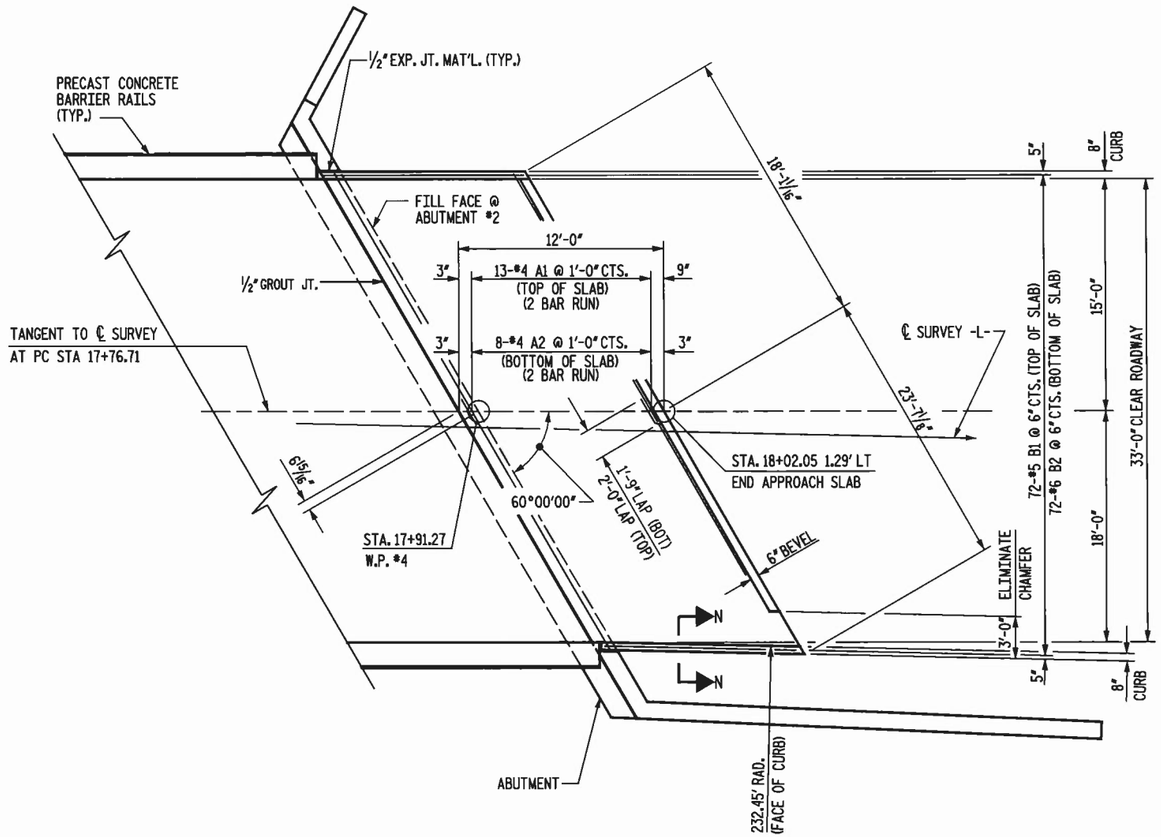

AT ABUTMENT #2

PLAN OF APPROACH SLAB

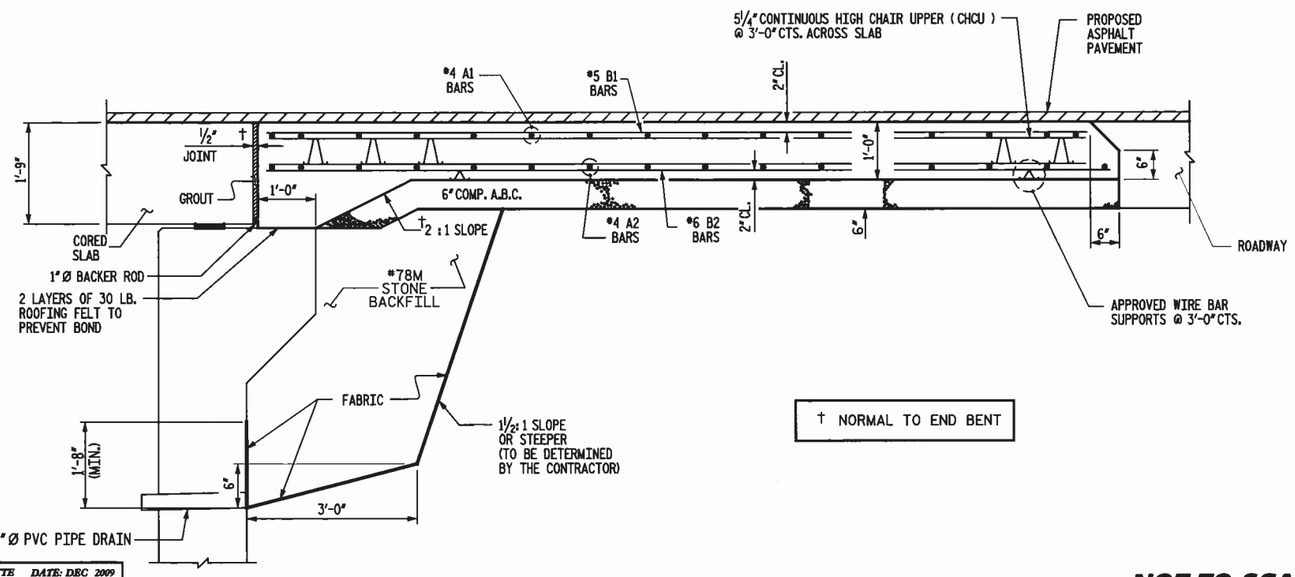

† NORMAL TO END BENT

DRAWN BY: B.L. MARIOTTE DATE: DEC 2009
CHECKED BY: J.E. MONDOLFI DATE: DEC 2009

NOT TO SCALE

NOTES

FOR BRIDGE APPROACH FILL INCLUDING FABRIC, 4" Ø DRAINAGE PIPE, AND #78M STONE BACKFILL, SEE BRIDGE APPROACH FILLS, SHEET 19.

APPROACH SLAB SHALL NOT BE CONSTRUCTED PRIOR TO INSTALLATION OF CORED SLAB.

FABRIC SHALL BE TYPE 1 ENGINEERING FABRIC IN ACCORDANCE WITH THE STANDARD SPECIFICATIONS SECTION 1056.

#78M STONE BACKFILL (CLASS V SELECT MATERIAL) SHALL BE IN ACCORDANCE WITH STANDARD SPECIFICATIONS SECTION 1016.

#78M STONE BACKFILL IS TO BE CONTINUOUS ALONG FILL FACE OF END BENT CAP FROM OUTSIDE EDGE TO OUTSIDE EDGE OF APPROACH SLAB.

FOR THE 4" Ø DRAINAGE PIPE OUTLET(S), SEE BRIDGE APPROACH FILLS, SHEET 19.

AREA BETWEEN THE WINGWALL AND APPROACH SLAB SHALL BE GRADED TO DRAIN THE WATER AWAY FROM THE FILL FACE OF THE BRIDGE AND SHALL BE PAVED.

THE 6" COMP. A.B.C. SHALL BE FLUSH WITH THE ROADWAY END OF THE APPROACH SLAB AND SHALL BE FLUSH WITH EACH EDGE OF THE APPROACH SLAB.

THE CONTRACTOR MAY USE 4" TYPE B-25.0B ASPHALT CONCRETE BASE COURSE IN LIEU OF 6" COMP. A.B.C. IF THIS OPTION IS USED, THE BASE COURSE SHALL BE FLUSH WITH THE ROADWAY END OF THE APPROACH SLAB, AND THE WIDTH SHALL BE THE SAME AS THAT OF THE APPROACH SLAB.

THE CONTRACTOR MAY USE 5" CLASS "A" CONCRETE BASE IN LIEU OF 6" COMP. A.B.C. IF THIS OPTION IS USED, THE CONCRETE BASE SHALL BE FLUSH WITH THE ROADWAY END OF THE APPROACH SLAB, AND THE WIDTH SHALL BE THE SAME AS THAT OF THE APPROACH SLAB. THE CONCRETE SHALL BE FINISHED TO A SMOOTH SURFACE AND A LAYER OF 30 LB ROOFING FELT SHALL BE PLACED BETWEEN THE CONCRETE BASE AND THE APPROACH SLAB TO PREVENT BOND. THE APPROACH SLAB SHALL NOT BE CAST UNTIL THE CONCRETE BASE HAS REACHED AN AGE OF THREE CURING DAYS.

FOR JOINT DETAILS, SEE "PRESTRESSED CONCRETE CORED SLAB UNIT" SHEETS.

THE JOINT AT THE END BENT SHALL BE GROUTED AS SOON AS PRACTICAL AFTER THE CONSTRUCTION OF THE APPROACH SLABS.

APPROACH SLAB GROOVING IS NOT REQUIRED.

#78 STONE BACKFILL, 4" Ø DRAINAGE PIPE AND FABRIC SHALL BE INCLUDED IN THE LUMP SUM PRICE BID FOR APPROACH SLABS.

BILL OF MATERIAL

APPROACH SLAB AT END BENT #1

BAR	NO.	SIZE	TYPE	LENGTH	WEIGHT
* A1	26	#4	STR	20'-11"	363
A2	26	#4	STR	20'-10"	362
* B1	72	#5	STR	11'-1"	832
B2	72	#6	STR	11'-7"	1,253
REINFORCING STEEL				LBS.	1,615
* EPOXY COATED REINFORCING STEEL				LBS.	1,195
CLASS AA CONCRETE				C. Y.	18.2

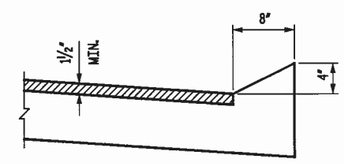

SECTION N-N

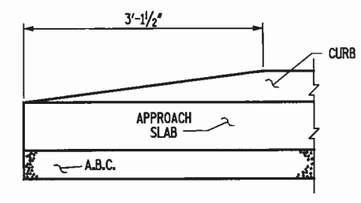

END OF CURB WITHOUT SHOULDER BERM GUTTER

CURB DETAILS

PROJECT NO. 42834
COUNTY: BURKE
STATION: 17+35.00
REPLACES BRIDGE NO. 118

STATE OF NORTH CAROLINA
DEPARTMENT OF TRANSPORTATION
RALEIGH

APPROACH SLAB AT ABUTMENT NO. 2

Florence & Hutcheson
CONSULTING ENGINEERS
5121 Kingdom Way, Suite 100 Raleigh, NC 27607
NC License No: F-0258

NORTH CAROLINA PROFESSIONAL SEAL 20530 ENGINEER JAMES E. MONDOLFI
2-9-10

REVISIONS						SHEET NO.
NO.	BY	DATE	NO.	BY	DATE	17
1			3			TOTAL SHEETS
2			4			30

FILE NAME: P:\NCDOT\Div13\Bu-Hu_DP\H4038BR\Structures\U1A_H4038_17.dgn
PLOT: 2/9/2010 4:20:54 PM by & Associates, P.C.

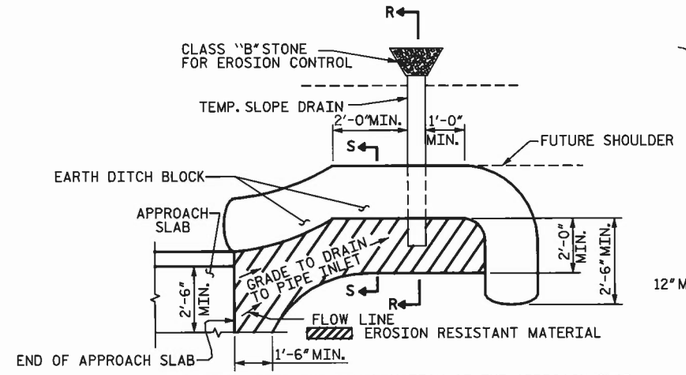

NOTE: IMMEDIATELY AFTER THE CONSTRUCTION OF THE APPROACH SLAB, THE CONTRACTOR SHALL PROVIDE TEMPORARY BERM AND SLOPE DRAIN. CONTRACTOR SHALL GRADE TO PIPE INLET AND PROVIDE EROSION RESISTANT MATERIAL AS SHOWN. THE EROSION RESISTANT MATERIAL SHALL BE EITHER 1) ASPHALT PLANT MIX, TYPE 1 OR TYPE 2, MIN. 2" DEPTH, 2) EROSION CONTROL MAT, OR 3) CONCRETE, AS DIRECTED BY THE ENGINEER. THE SLOPE DRAIN SHALL CONSIST OF A NON-PERFORATED TEMPORARY DRAINAGE PIPE, 12 INCHES IN DIAMETER.

PLAN VIEW

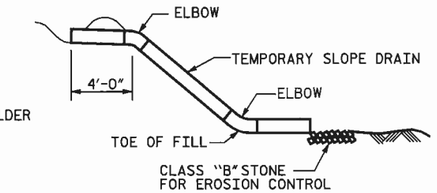

SECTION R-R

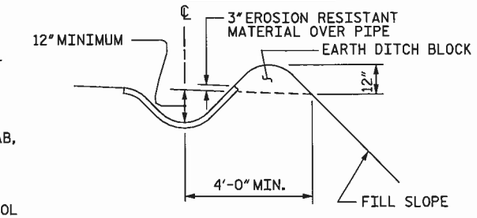

SECTION S-S

TEMPORARY BERM AND SLOPE DRAIN DETAILS

(TO BE USED WHEN SHOULDER BERM GUTTER IS REQUIRED)

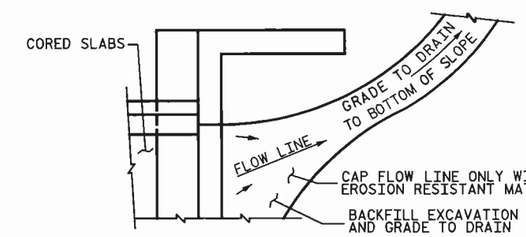

NOTE: IF THE APPROACH SLAB IS NOT CONSTRUCTED IMMEDIATELY AFTER THE BACKFILLING OF THE END BENT EXCAVATION, GRADE TO DRAIN TO THE BOTTOM OF THE SLOPE AND PROVIDE EROSION RESISTANT MATERIAL, SUCH AS FIBERGLASS ROVING OR AS DIRECTED BY THE ENGINEER TO PREVENT SOIL EROSION AND TO PROTECT THE AREA ADJACENT TO THE STRUCTURE. THE CONTRACTOR WILL BE REQUIRED TO REMOVE THESE MATERIALS PRIOR TO CONSTRUCTION OF THE APPROACH SLAB.

TEMPORARY DRAINAGE DETAIL

PROJECT NO. 42834
COUNTY: BURKE
STATION: 17+35.00
REPLACES BRIDGE NO. 118

STATE OF NORTH CAROLINA
DEPARTMENT OF TRANSPORTATION
RALEIGH

STANDARD

BRIDGE APPROACH
SLAB DETAILS

REVISIONS						SHEET NO.
NO.	BY	DATE	NO.	BY	DATE	18
1			3			TOTAL SHEETS
2			4			30

Florence & Hutcheson
CONSULTING ENGINEERS
5121 Kingdom Way, Suite 100 Raleigh, NC 27607
NC License No: F-0268

NORTH CAROLINA PROFESSIONAL SEAL 20523 ENGINEER JAMES E. MONDOLFI

2-9-10

NOT TO SCALE

DRAWN BY: B.L. MARIOTTE DATE: DEC 2009
CHECKED BY: J.E. MONDOLFI DATE: DEC 2009

PLOT: 2/9/2010 4:53:33 PM Ko & Associates, P.C.
FILE NAME: p:\roads\divr13\bur\u_JR\bu42834\proj\bu42834_TEMP_DRAIN.dgn

PROJECT REFERENCE NO.	SHEET NO.
B-5232	19

PROJECT SERVICES UNIT
STANDARDS AND SPECIAL DESIGN
Office 919-250-4128 FAX 919-250-4119

BRIDGE APPROACH FILLS
CORED SLAB & BOX BEAM BRIDGES
SUB REGIONAL TIER

ORIGINAL BY: K. A. Kempf DATE: 6-10-08
MODIFIED BY: DATE:
CHECKED BY: DATE: 4/7/09
FILE SPEC.: kkempf\english\bridge approach fills.dgn

26-JUN-2008 15:32
s:\contracts\contracts\special details\kkempf\english\bridge approach fill.dgn
kkempf 41 P5237489

8/11/99

DATUM DESCRIPTION

THE LOCALIZED COORDINATE SYSTEM DEVELOPED FOR THIS PROJECT IS BASED ON THE STATE PLANE COORDINATES ESTABLISHED BY NCDOT FOR MONUMENT "BL-2"
WITH NAD 83 STATE PLANE GRID COORDINATES OF NORTHING: 680765.000X(ft) EASTING: 1239359.490X(ft)
THE AVERAGE COMBINED GRID FACTOR USED ON THIS PROJECT (GROUND TO GRID) IS: 0.99987384
THE N.C. LAMBERT GRID BEARING AND LOCALIZED HORIZONTAL GROUND DISTANCE FROM "BL-2" TO -L- STATION 14+00.00 IS N 82° 59' 43.0" W , 194.52'
ALL LINEAR DIMENSIONS ARE LOCALIZED HORIZONTAL DISTANCES
VERTICAL DATUM USED IS NAVD 88

PI Sta 10+57.65
Δ = 11° 57' 39.5" (RT)
D = 10° 24' 40.5"
L = 114.89'
T = 57.65'
R = 550.33'

PI Sta 13+37.76
Δ = 8° 28' 44.9" (RT)
D = 14° 07' 36.1"
L = 60.02'
T = 30.07'
R = 405.59'

PI Sta 14+00.20
Δ = 2° 15' 48.3" (RT)
D = 5° 00' 00.0"
L = 45.27'
T = 22.64'
R = 1,145.92'

PI Sta 15+51.60
Δ = 30° 11' 11.8" (RT)
D = 12° 00' 00.0"
L = 251.55'
T = 128.77'
R = 477.46'
SE = 0.06
V = 30 MPH

PI Sta 18+11.03
Δ = 15° 41' 23.9" (RT)
D = 23° 00' 00.0"
L = 68.22'
T = 34.32'
R = 249.11'
SE = 0.03
V = 10 MPH

PI Sta 19+41.38
Δ = 12° 16' 02.2" (LT)
D = 18° 00' 00.0"
L = 68.15'
T = 34.21'
R = 318.31'
SE = 0.03
V = 10 MPH

PI Sta 20+39.67
Δ = 26° 39' 06.6" (LT)
D = 32° 25' 02.0"
L = 82.22'
T = 41.87'
R = 176.74'

PI Sta 21+86.81
Δ = 51° 04' 39.0" (LT)
D = 29° 14' 45.0"
L = 174.65'
T = 93.61'
R = 195.91'

PI Sta 12+19.41
Δ = 35° 15' 59.4" (RT)
D = 19° 19' 04.6"
L = 182.56'
T = 94.27'
R = 296.59'

GRAPHIC SCALE
50 0 50 100

PROJECT REFERENCE NO.	SHEET NO.
B-5232	
R/W SHEET NO.	

ROADWAY DESIGN ENGINEER — NORTH CAROLINA PROFESSIONAL SEAL 14668 ENGINEER BRIAN ALLEN WILKES 2/18/10

HYDRAULICS ENGINEER — NORTH CAROLINA PROFESSIONAL SEAL 19732 ENGINEER HSIHCHEN FUH 2-08-10

DETAIL A
SPECIAL CUT DITCH
(Not to Scale)

-L- STA. 15+00 TO 16+60 LT.
-L- STA. 16+00 TO 17+05 RT.

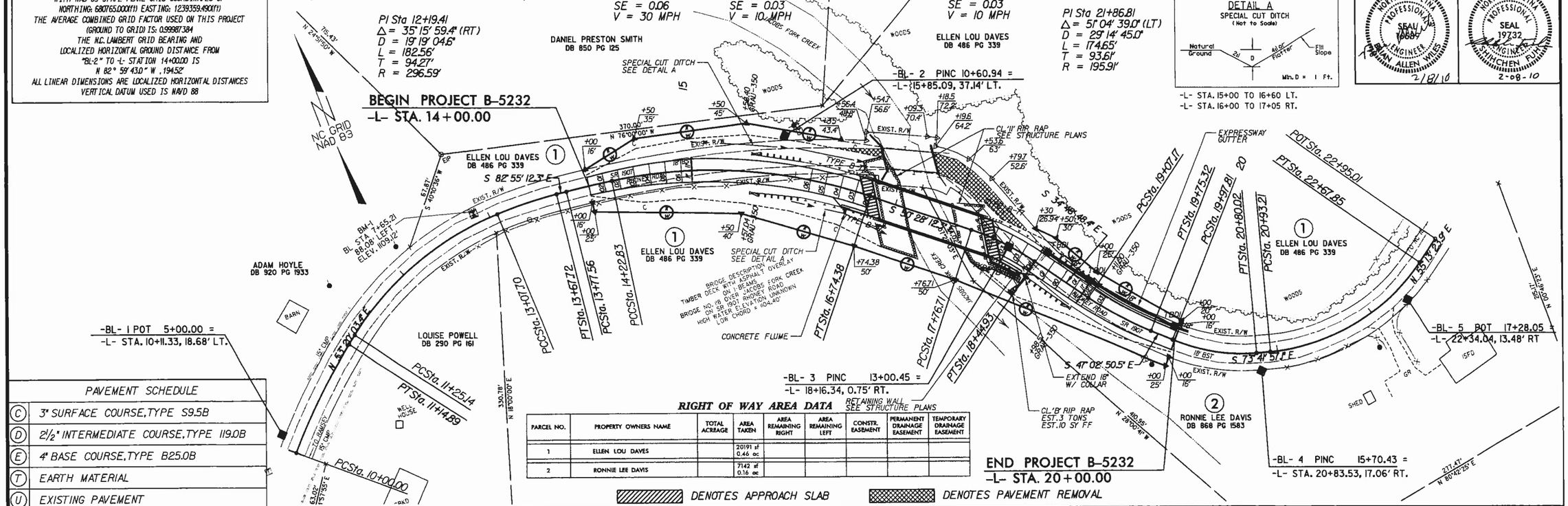

PAVEMENT SCHEDULE

(C)	3" SURFACE COURSE, TYPE S9.5B
(D)	2½" INTERMEDIATE COURSE, TYPE I19.0B
(E)	4" BASE COURSE, TYPE B25.0B
(T)	EARTH MATERIAL
(U)	EXISTING PAVEMENT

RIGHT OF WAY AREA DATA

PARCEL NO.	PROPERTY OWNERS NAME	TOTAL ACREAGE	AREA TAKEN	AREA REMAINING RIGHT	AREA REMAINING LEFT	CONSTR. EASEMENT	PERMANENT DRAINAGE EASEMENT	TEMPORARY DRAINAGE EASEMENT
1	ELLEN LOU DAVES		20191 sf 0.46 ac					
2	RONNIE LEE DAVIS		7142 sf 0.16 ac					

DENOTES APPROACH SLAB
DENOTES PAVEMENT REMOVAL

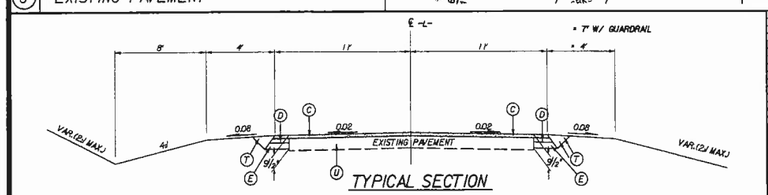

TYPICAL SECTION

BM # 1
-L- STA. 12+87.02, 9.38' LT
RR SPIKE IN EDGE OF PAVEMENT
EL. 1109.12

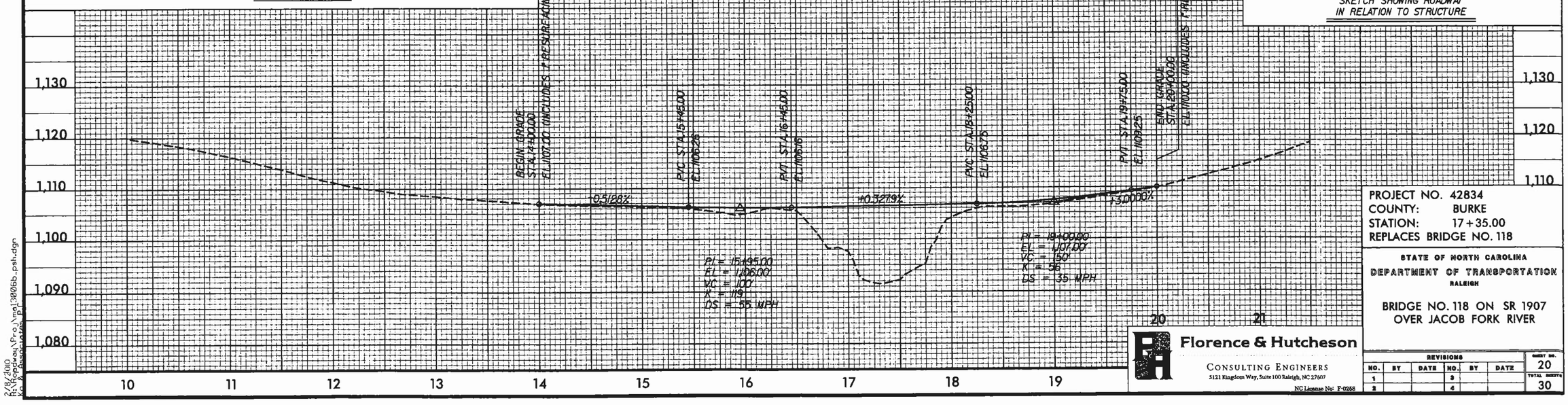

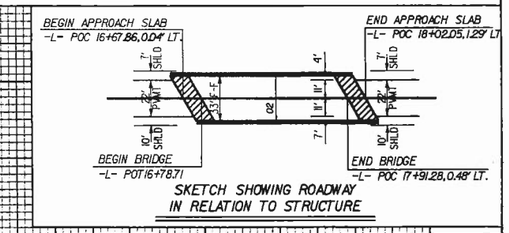

SKETCH SHOWING ROADWAY IN RELATION TO STRUCTURE

PROJECT NO. 42834
COUNTY: BURKE
STATION: 17+35.00
REPLACES BRIDGE NO. 118

STATE OF NORTH CAROLINA
DEPARTMENT OF TRANSPORTATION
RALEIGH

BRIDGE NO. 118 ON SR 1907 OVER JACOB FORK RIVER

Florence & Hutcheson
CONSULTING ENGINEERS
5121 Kingdom Way, Suite 100 Raleigh, NC 27607
NC License No: F-0258

REVISIONS						SHEET NO.
NO.	BY	DATE	NO.	BY	DATE	20
1			3			TOTAL SHEETS
2			4			30

2/18/2010
R:\Roadway\Proj\mel3006b_psh.dgn
KG & Associates, P.C.

PROJECT REFERENCE NO.	SHEET NO.

STATE OF
NORTH CAROLINA
DEPT. OF TRANSPORTATION
DIVISION OF HIGHWAYS
RALEIGH, N.C.

ENGLISH DETAIL DRAWING FOR
MODIFIED CONCRETE FLUME
WITH CONCRETE OR RIP-RAP DITCH

SHEET 1 OF 1
MODFLMDTCH

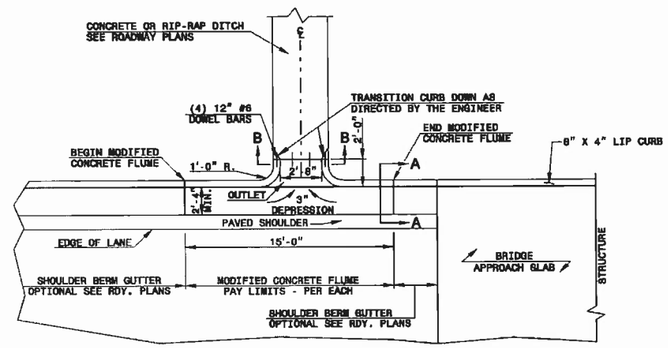

PLAN VIEW

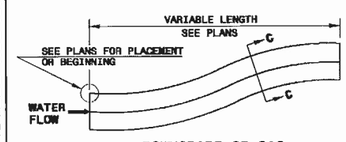

DOWNGRADE OR SAG

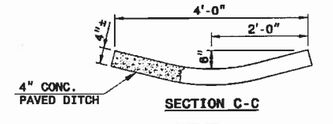

SECTION C-C

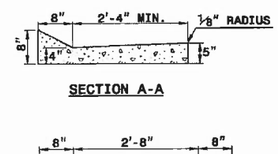

SECTION A-A

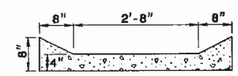

SECTION B-B

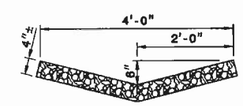

RIP-RAP LINED DITCH

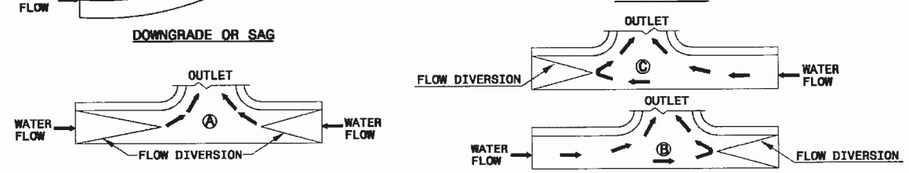

SAG

FLOW DIVERSION EXAMPLES

DOWN GRADE

NOTES:

- CONSTRUCT MODIFIED CONCRETE FLUME AND SHOULDER BERM GUTTER IN ACCORDANCE WITH THIS DETAIL.
- CONSTRUCT CONCRETE DITCH IN ACCORDANCE WITH STD. DWG. NO. 850.01.
- CONSTRUCT RIP RAP LINED DITCH IN ACCORDANCE WITH THIS DETAIL, IF CALLED FOR IN PLANS.
- CONCRETE OR RIP RAP LINED DITCH SHALL BE THE TYPE AND LENGTH SPECIFIED BY THE ROADWAY PLANS. THE DITCH SHALL TERMINATE AS SHOWN ON THE PLANS. IF NO TERMINATION IS INDICATED PLACE RIP-RAP AT THE END OF THE DITCH AS INDICATED BY STD. DWG. 876.02 FOR AN 18" PIPE. TRANSITIONS FROM THE DITCH TO TERMINATION SHALL BE AS DIRECTED BY THE ENGINEER.
- MODIFICATIONS SHALL BE AS DICTATED BY SITE CONDITIONS AND DIRECTED BY THE ENGINEER.

STATE OF
NORTH CAROLINA
DEPT. OF TRANSPORTATION
DIVISION OF HIGHWAYS
RALEIGH, N.C.

ENGLISH DETAIL DRAWING FOR
MODIFIED CONCRETE FLUME
WITH CONCRETE OR RIP-RAP DITCH

SHEET 1 OF 1
MODFLMDTCH

DESIGN SERVICES UNIT
STANDARDS AND SPECIAL DESIGN
Office 919-250-4128 FAX 919-250-4119

SEE PLATE FOR TITLE

ORIGINAL BY: E.E. Ward DATE: Apr. 2002
MODIFIED BY: E.E. Ward DATE: July 2004
CHECKED BY: DATE:
FILE SPEC.: w:\details\stand\modifiedflume.dgn

PROJECT NO. 42834
COUNTY: BURKE
STATION: 17+35.00
REPLACES BRIDGE NO. 118

STATE OF NORTH CAROLINA
DEPARTMENT OF TRANSPORTATION
RALEIGH

BRIDGE NO. 35 ON SR 1907
OVER JACOB FORK RIVER

Florence & Hutcheson
CONSULTING ENGINEERS
5121 Kingdom Way, Suite 100 Raleigh, NC 27607
NC License No: F-0258

NORTH CAROLINA PROFESSIONAL SEAL ENGINEER JAMES E. MONDOLFI
2-9-10

NOT TO SCALE

REVISIONS						SHEET NO.
NO.	BY	DATE	NO.	BY	DATE	21
1			3			TOTAL SHEETS
2			4			30

DRAWN BY: B.L. MARIOTTE DATE: DEC 2009
CHECKED BY: J.E. MONDOLFI DATE: DEC 2009

PLOT: DDMMYY HHMMSS USER FILE NAME: FILE ID

EROSION CONTROL PLAN

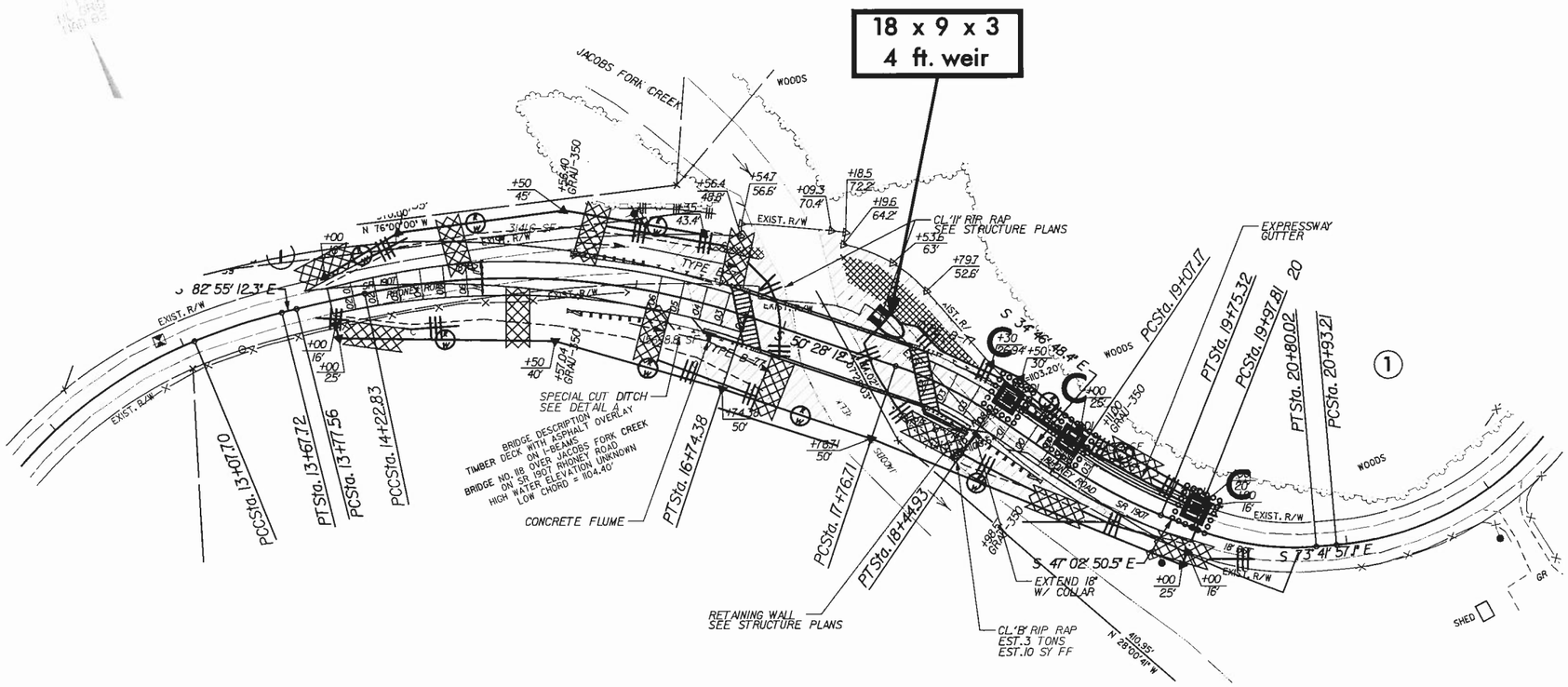

Std. #	Description	Symbol
1605.01	Temporary Silt Fence	
1630.06	Special Stilling Basin	
1632.03	Rock Inlet Sediment Trap Type C	
1633.01	Temporary Rock Silt Check Type-A	
1634.02	Temporary Rock Sediment Dam Type-B	

ENVIRONMENTALLY SENSITIVE AREA
PLEASE SEE HIGH QUALITY WATERS NOTE

EROSION CONTROL PLAN AND DETAILS ARE PROVIDED BY THE NCDOT ROADSIDE ENVIROMENTAL UNIT

ROADSIDE ENVIRONMENTAL UNIT
DEPARTMENT OF TRANSPORTATION
DIVISION OF HIGHWAYS
RALEIGH, N.C.

2006 STANDARD SPECIFICATIONS

NOTES: ANY DEVIATION FROM OPTIONS GIVEN WILL REQUIRE PRIOR APPROVAL BY ENGINEER.

ADDITIONAL EROSION CONTROL DEVICES MAY NEED TO BE INSTALLED AS DIRECTED BY THE ENGINEER.

PROJECT NO. 42834
COUNTY: BURKE
STATION: 17+35.00
REPLACES BRIDGE NO. 118

STATE OF NORTH CAROLINA
DEPARTMENT OF TRANSPORTATION
RALEIGH

BRIDGE NO. 118 ON SR 1907
OVER JACOB FORK RIVER

REVISIONS						SHEET NO.
NO.	BY	DATE	NO.	BY	DATE	22
1			3			TOTAL SHEETS
2			4			30

PLOT: 1/22/2018 3:45:22 PM Ks & Associates, P.C.
FILE NAME: P:\MCHM\Drv13\Burke_25\W4138888\Structure\18-5232_EC.dgn

COIR FIBER BAFFLE DETAIL

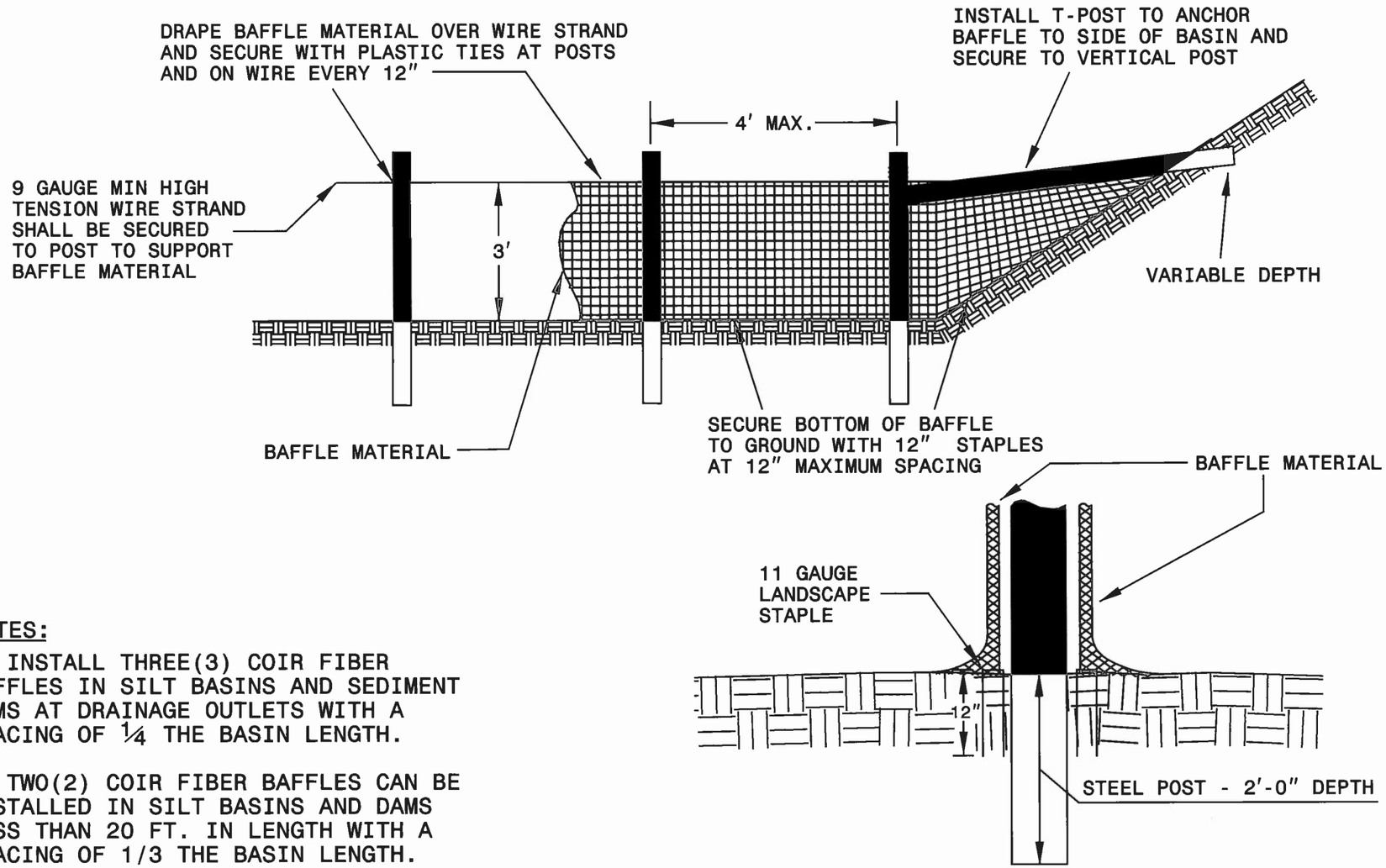

BAFFLE MATERIAL SHALL BE SECURED TO THE BOTTOM AND SIDES OF BASIN USING 12" LANDSCAPE STAPLES

NOTES:

1. INSTALL THREE(3) COIR FIBER BAFFLES IN SILT BASINS AND SEDIMENT DAMS AT DRAINAGE OUTLETS WITH A SPACING OF ¼ THE BASIN LENGTH.

2. TWO(2) COIR FIBER BAFFLES CAN BE INSTALLED IN SILT BASINS AND DAMS LESS THAN 20 FT. IN LENGTH WITH A SPACING OF 1/3 THE BASIN LENGTH.

3. TOP HEIGHT OF COIR FIBER BAFFLES SHALL NOT BE BELOW BASE OF EMERGENCY SPILLWAY ELEVATION.

PROJECT NO. 42834
COUNTY: BURKE
STATION: 17+35.00
REPLACES BRIDGE NO. 118

STATE OF NORTH CAROLINA
DEPARTMENT OF TRANSPORTATION
RALEIGH

BRIDGE NO. 118 ON SR 1907
OVER JACOB FORK RIVER

EROSION CONTROL PLAN AND DETAILS ARE PROVIDED BY THE NCDOT ROADSIDE ENVIROMENTAL UNIT

REVISIONS						SHEET NO.
NO.	BY	DATE	NO.	BY	DATE	23
1			3			TOTAL SHEETS
2			4			30

PLOT: 1/22/2018 3:47:21 PM Ko & Associates, P.C.
FILE NAME: P:\MCMA\Div13\Burke_25\M\38898\Structure\B-5232_EC.dgn

PROJECT REFERENCE NO.	SHEET NO.
B-5232	
R/W SHEET NO.	

ROADWAY STANDARD DRAWINGS

THE FOLLOWING ROADWAY STANDARDS AS APPEAR IN "ROADWAY STANDARD DRAWINGS"-ROADWAY DESIGN UNIT-N.C. DEPARTMENT OF TRANSPORTATION-RALEIGH, N.C., DATED JULY 2006 ARE APPLICABLE TO THIS PROJECT AND BY REFERENCE HEREBY ARE CONSIDERED A PART OF THESE PLANS:

STD. NO.	TITLE
1101.03	TEMPORARY ROAD CLOSURES
1101.04	TEMPORARY SHOULDER CLOSURES
1110.81	STATIONARY WORK ZONE SIGNS
1145.01	BARRICADES
1205.01	PAVEMENT MARKINGS - LINE TYPES & OFFSETS
1205.02	PAVEMENT MARKINGS - 2 LANE & MULTILANE ROADWAYS
1205.12	PAVEMENT MARKINGS - BRIDGES
1250.01	PAVEMENT MARKER SPACING
1251.01	RAISED PAVEMENT MARKERS (TEMPORARY & PERMANENT)
1261.01	GUARDRAIL & BARRIER DELINEATOR SPACING
1261.02	GUARDRAIL & BARRIER DELINEATOR TYPES
1262.01	GUARDRAIL END DELINEATION

GENERAL NOTES

CHANGES MAY BE REQUIRED WHEN PHYSICAL DIMENSIONS IN THE DETAIL DRAWINGS, STANDARD DETAILS, AND ROADWAY DETAILS ARE NOT ATTAINABLE TO MEET FIELD CONDITIONS OR RESULT IN DUPLICATE OR UNDESIRED OVERLAPPING OF DEVICES. MODIFICATION MAY INCLUDE: MOVING, SUPPLEMENTING, COVERING, OR REMOVAL OF DEVICES AS DIRECTED BY THE ENGINEER.

THE FOLLOWING GENERAL NOTES APPLY AT ALL TIMES FOR THE DURATION OF THE CONSTRUCTION PROJECT EXCEPT WHEN OTHERWISE NOTED IN THE PLAN OR DIRECTED BY THE ENGINEER.

TRAFFIC PATTERN ALTERATIONS

A) NOTIFY THE ENGINEER TWENTY ONE (21) CALENDAR DAYS PRIOR TO ANY TRAFFIC PATTERN ALTERATION.

SIGNING

B) PROVIDE PERMANENT SIGNING.

C) PROVIDE SIGNING AND DEVICES REQUIRED TO CLOSE THE ROAD ACCORDING TO THE ROADWAY STANDARD DRAWINGS AND TRAFFIC CONTROL PLANS.

PROVIDE SIGNING REQUIRED FOR THE OFF-SITE DETOUR ROUTE AS SHOWN IN THE TRAFFIC CONTROL PLANS, UNLESS OTHERWISE NOTED.

D) COVER OR REMOVE ALL SIGNS AND DEVICES REQUIRED TO CLOSE THE ROAD WHEN ROAD CLOSURE IS NOT IN OPERATION.

COVER OR REMOVE ALL SIGNS REQUIRED FOR THE OFF-SITE DETOUR WHEN THE DETOUR IS NOT IN OPERATION.

E) ENSURE ALL NECESSARY SIGNING IS IN PLACE PRIOR TO ALTERING ANY TRAFFIC PATTERN.

TRAFFIC CONTROL DEVICES

F) PLACE TYPE III BARRICADES, WITH "ROAD CLOSED" SIGN R11-2 ATTACHED, OF SUFFICIENT LENGTH TO CLOSE ENTIRE ROADWAY.

G) INSTALL PAVEMENT MARKINGS ON THE FINAL SURFACE AS FOLLOWS:

ROAD NAME	MARKING
1. SR 1907 (RHONEY RD.)	PAINT

H) PLACE AT LEAST TWO APPLICATION OF PAINT PAVEMENT MARKINGS ON THE FINAL WEARING SURFACE ON NEW ASPHALT PAVEMENT. PLACE ADDITIONAL APPLICATIONS OF PAINT UPON SUFFICIENT DRYING TIME, AS DETERMINED BY THE ENGINEER.

I) TIE PROPOSED PAVEMENT MARKING LINES TO EXISTING PAVEMENT MARKING LINES.

PHASE I

STEP 1: - USING ROADWAY STANDARD DRAWING NUMBER 1101.04, SHEET 1 OF 1, INSTALL ALL DETOUR SIGNING KEEPING SIGNS COVERED (SEE SHEET 21).

WORKING IN A CONTINUOUS MANNER, COMPLETE THE FOLLOWING WORK IN PHASE I, STEP 2.

STEP 2: - USING ROADWAY STANDARD DRAWING NUMBER 1101.03, SHEET 1 OF 9, CLOSE SR 1907 (RHONEY RD.) TO TRAFFIC, UNCOVER ALL DETOUR SIGNING AND SHIFT TRAFFIC TO DETOUR (SEE SHEET 21).

STEP 3: - DISMANTLE AND REMOVE EXISTING BRIDGE NUMBER 35.

STEP 4: - COMPLETE CONSTRUCTION OF PROPOSED STRUCTURE, APPROACH ROADWAY TIE-INS, AND ASSOCIATED ITEMS.

STEP 5: - PLACE FINAL PAVEMENT MARKINGS (PAINT).

WORKING IN A CONTINUOUS MANNER, COMPLETE THE FOLLOWING WORK IN PHASE I, STEP 6.

STEP 6: - USING ROADWAY STANDARD DRAWING NUMBER 1101.04, SHEET 1 OF 1, REMOVE ALL DETOUR SIGNING, ALL TRAFFIC CONTROL DEVICES AND OPEN SR 1907 (RHONEY RD.) TO TRAFFIC.

NORTH CAROLINA PROFESSIONAL SEAL 15878 ENGINEER MICHAEL T. RIEPKA
2-9-10

FINAL PAV'T MARKING SCHEDULE

SYMBOL	DESCRIPTION	QUANTITY BREAKDOWN	PAY ITEM	TOTAL QUANTITY
		PAVEMENT MARKING LINES		
			PAINT (4")	
PA	WHITE EDGELINE 2X	2,400 LF		
PI	YELLOW DOUBLE CENTER LINE 2X	2,400 LF		
			TOTAL	4,800 LF

PROJECT NO. 42834
COUNTY: BURKE
STATION: 17+35.00
REPLACES BRIDGE NO. 118

STATE OF NORTH CAROLINA
DEPARTMENT OF TRANSPORTATION
RALEIGH

BRIDGE NO. 118 ON SR 1907
OVER JACOB FORK CREEK

Florence & Hutcheson
CONSULTING ENGINEERS
5121 Kingdom Way, Suite 100 Raleigh, NC 27607
NC License No: F-0258

REVISIONS						SHEET NO.
NO.	BY	DATE	NO.	BY	DATE	24
1			3			TOTAL SHEETS
2			4			30

7/2/99

2/9/2010
F:\NCMA\Dyv13\Burke_35\M013006B\TrafficControl\TCP\TCP1.dgn
Florence & Hutcheson, Inc.

PROJECT REFERENCE NO.	SHEET NO.
B-5232	
R/W SHEET NO.	

NORTH CAROLINA PROFESSIONAL SEAL 15876 ENGINEER MICHAEL T. REEPE
2-9-10

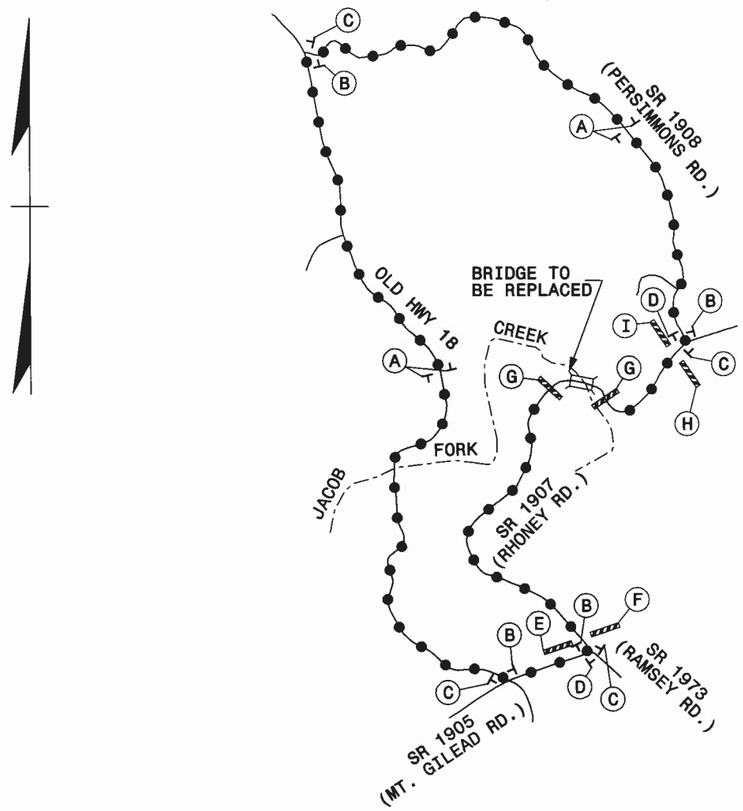

SIGN NUMR:
TYPE: B or D
QUANTITY: 1

SIGN WIDTH: 60 INCHES
HEIGHT: 16 INCHES
TOTAL AREA:(S.F.) 6.67

BORDR TYPE: FLUSH
RECESS: 0.00 INCHES
WIDTH: 0.75 INCHES
RADII: 3.00 INCHES

NO. Z BARS: #N/A VHB:
LENGTH: #N/A INCHES

BACKG COLOR: ORANGE
COPY COLOR: BLACK

MAJOR COPY SERIES: D

MAT'L: 0.125 " ALUMINUM

DESIGN BY: BLM
PROJECT ID: MA13006B

CK BY:
DIV: 13

STD #: 186
DATE: ########

USE NOTES: 1,4
1. Legend and border shall be direct applied Type III reflective sheeting.
2. Legend and border shall be direct applied Type I reflective sheeting.
3. Shields shall be Type III reflective sheeting on .032" aluminum and demountable.
4. Background shall be Type III refl. shtg.
5. Background shall be Type I refl. sheeting.
6. Center arrow(s) vertically on sign.

RHONEY RD

VERTICAL SPACING INCHES	[y]
5.00	SPACE
6.00	LINE 1
D	11.0
5.00	SPACE
0.00	
0.00	
0.00	
0.00	
0.00	
0.00	
0.00	
0.00	
TOTAL: 16	0.00

SIZE/ SERIES	LT MARGIN		R	H	O	N	E	Y		R	D						RT MARGIN
			SIGN COPY														
CHAR: 6.00 INCH																	
TYPE: D		6.84	5.44	5.44	5.82	5.44	4.41	5.08	5.46	5.44	4.03	0.00	0.00	0.00	0.00	0.00	
#/LC: 0.00 INCH		[x]	6.84	12.27	17.71	23.33	28.76	33.17	38.24	43.70	49.13	53.16	0.00	0.00	0.00	0.00	
SPCE: 1.00 FACTOR																	
LINE 1			0.00	0.00	0.00	0.00	0.00	0.00	0.00	0.00	0.00	0.00	0.00	0.00	0.00	0.00	6.84
			0.00	0.00	0.00	0.00	0.00	0.00	0.00	0.00	0.00	0.00	0.00	0.00	0.00	0.00	0.00

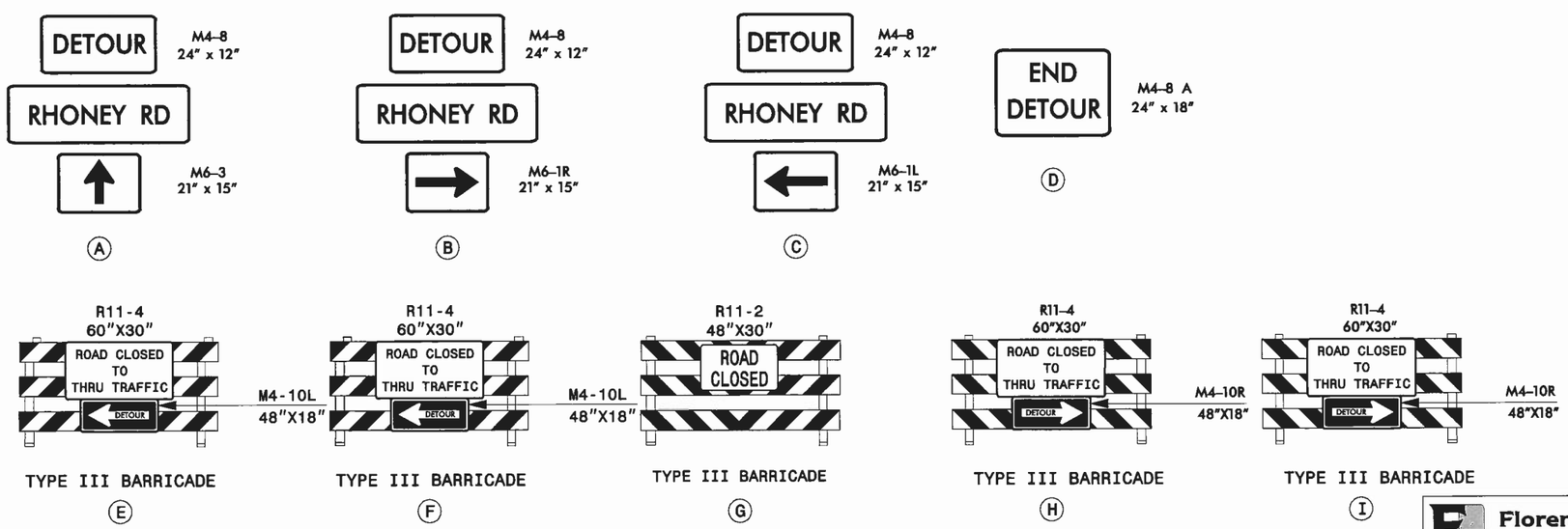

LEGEND

DETOUR ROUTE

PROJECT NO. 42834
COUNTY: BURKE
STATION: 17+35.00
REPLACES BRIDGE NO. 118

STATE OF NORTH CAROLINA
DEPARTMENT OF TRANSPORTATION
RALEIGH

BRIDGE NO. 118 ON SR 1907
OVER JACOB FORK CREEK

Florence & Hutcheson
CONSULTING ENGINEERS
5121 Kingdom Way, Suite 100 Raleigh, NC 27607
NC License No: F-0258

REVISIONS							
NO.	BY	DATE	NO.	BY	DATE	SHEET NO.	25
1			3			TOTAL SHEETS	30
2			4				

2/9/2010
P:\NCMA\Dyl13\Burke-35\MA13006B\TrafficControl\TCP\DETOUR.dgn
Florence & Hutcheson, Inc.

PROJ. REFERENCE NO.	SHEET NO.
B-5232	26

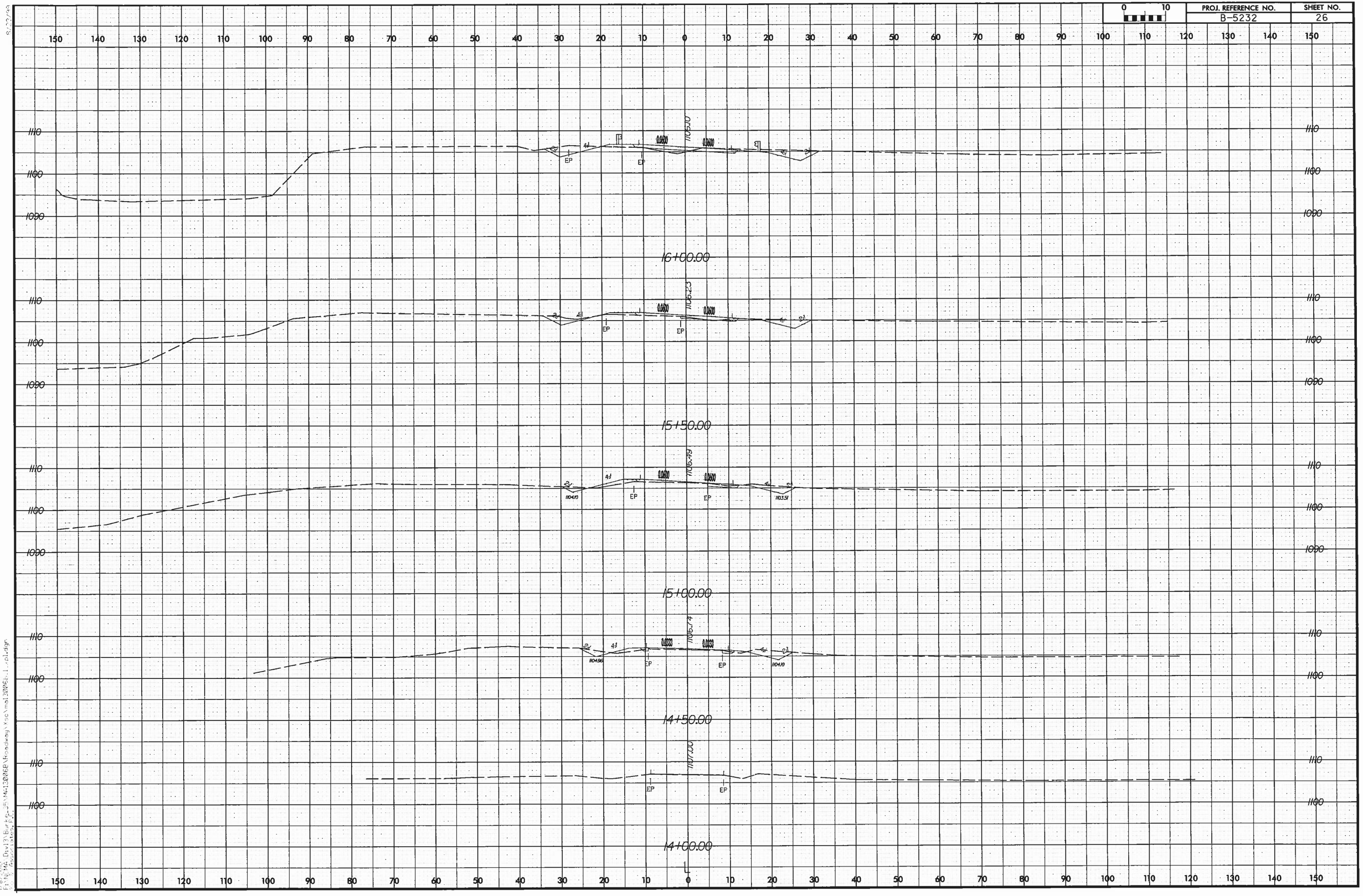

PROJ. REFERENCE NO.	SHEET NO.
B-5232	27

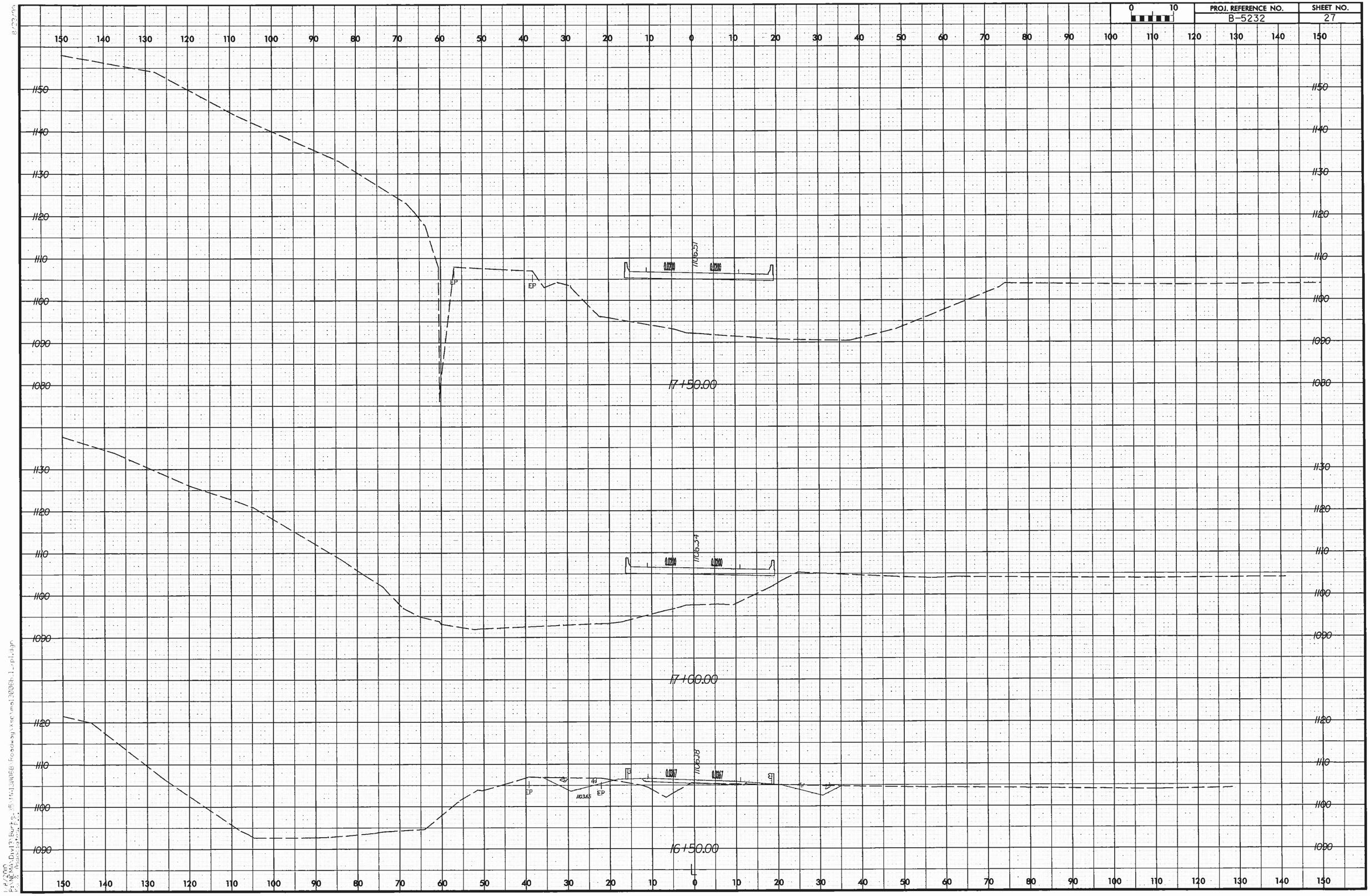

PROJ. REFERENCE NO.	SHEET NO.
B-5232	28

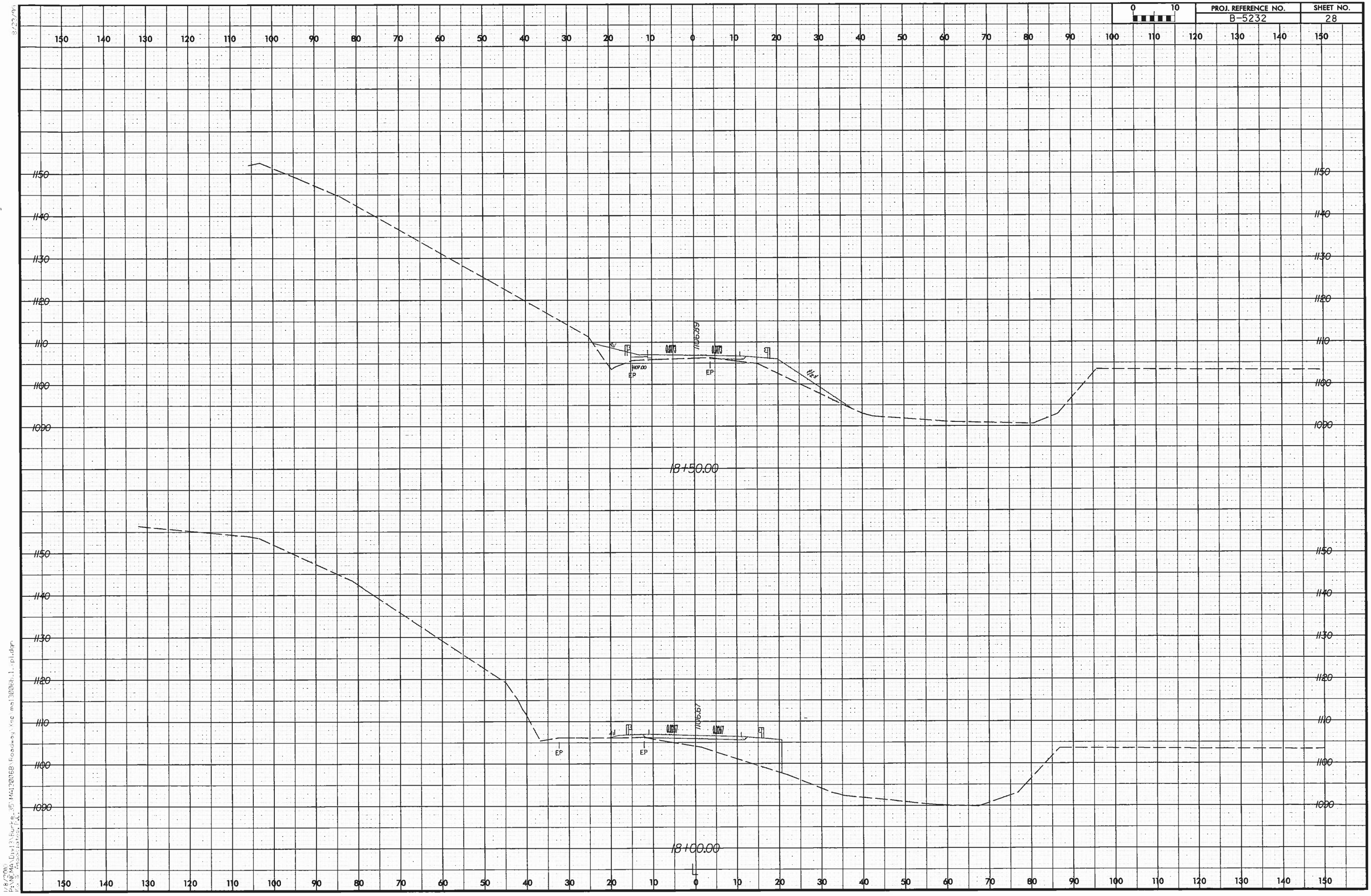

PROJ. REFERENCE NO.	SHEET NO.
B-5232	29

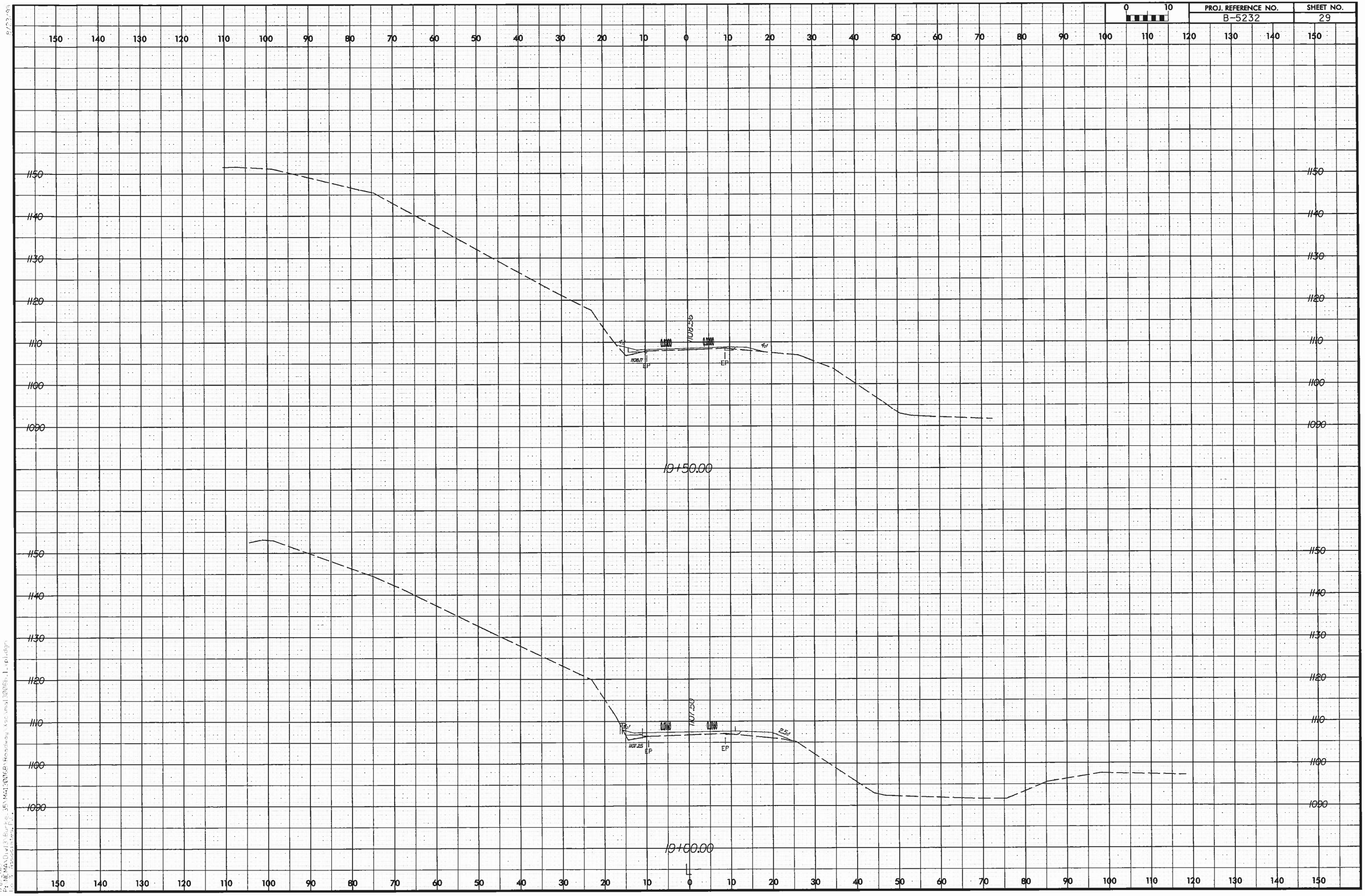
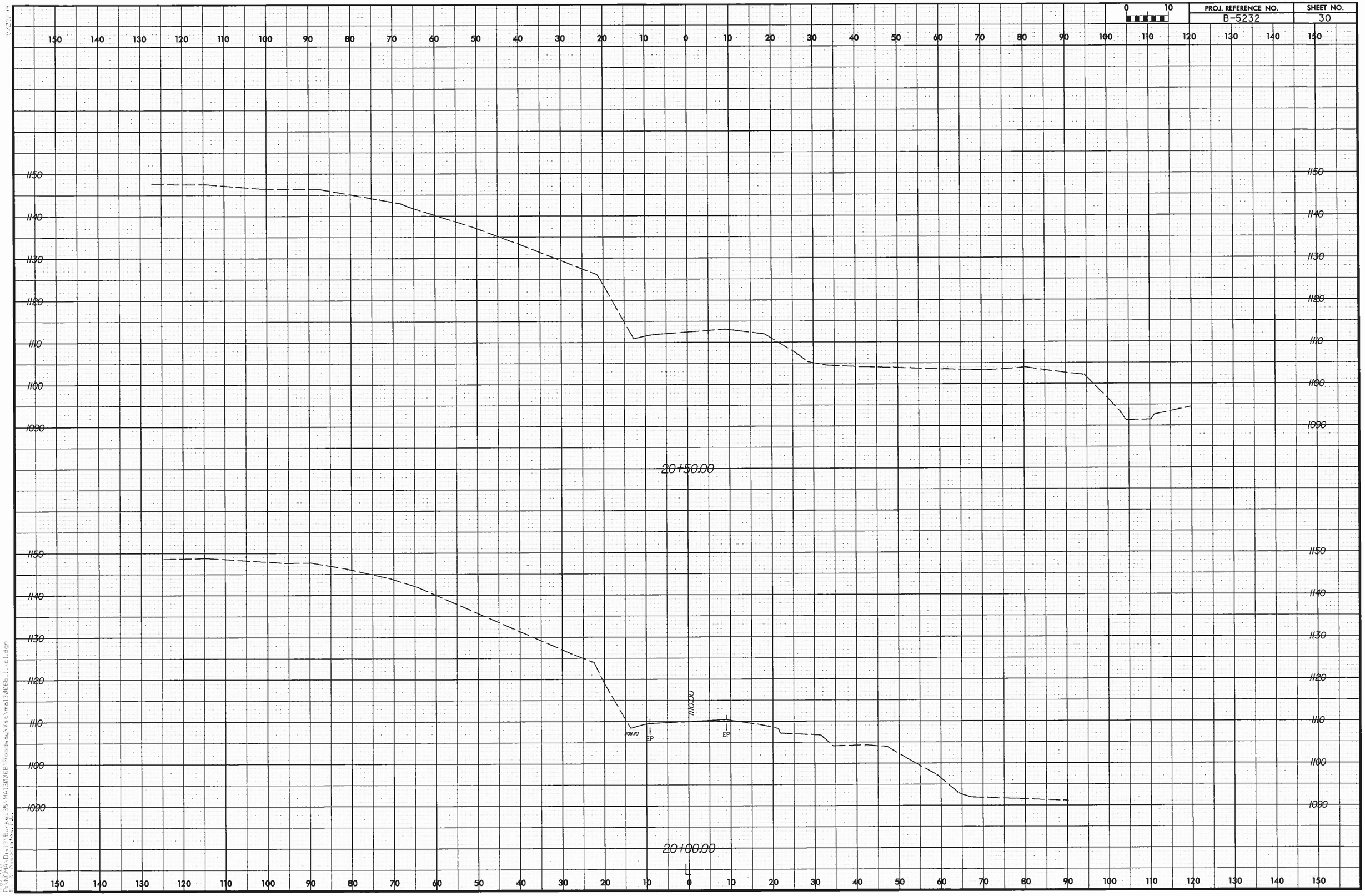
PROJ. REFERENCE NO.	SHEET NO.
B-5232	30