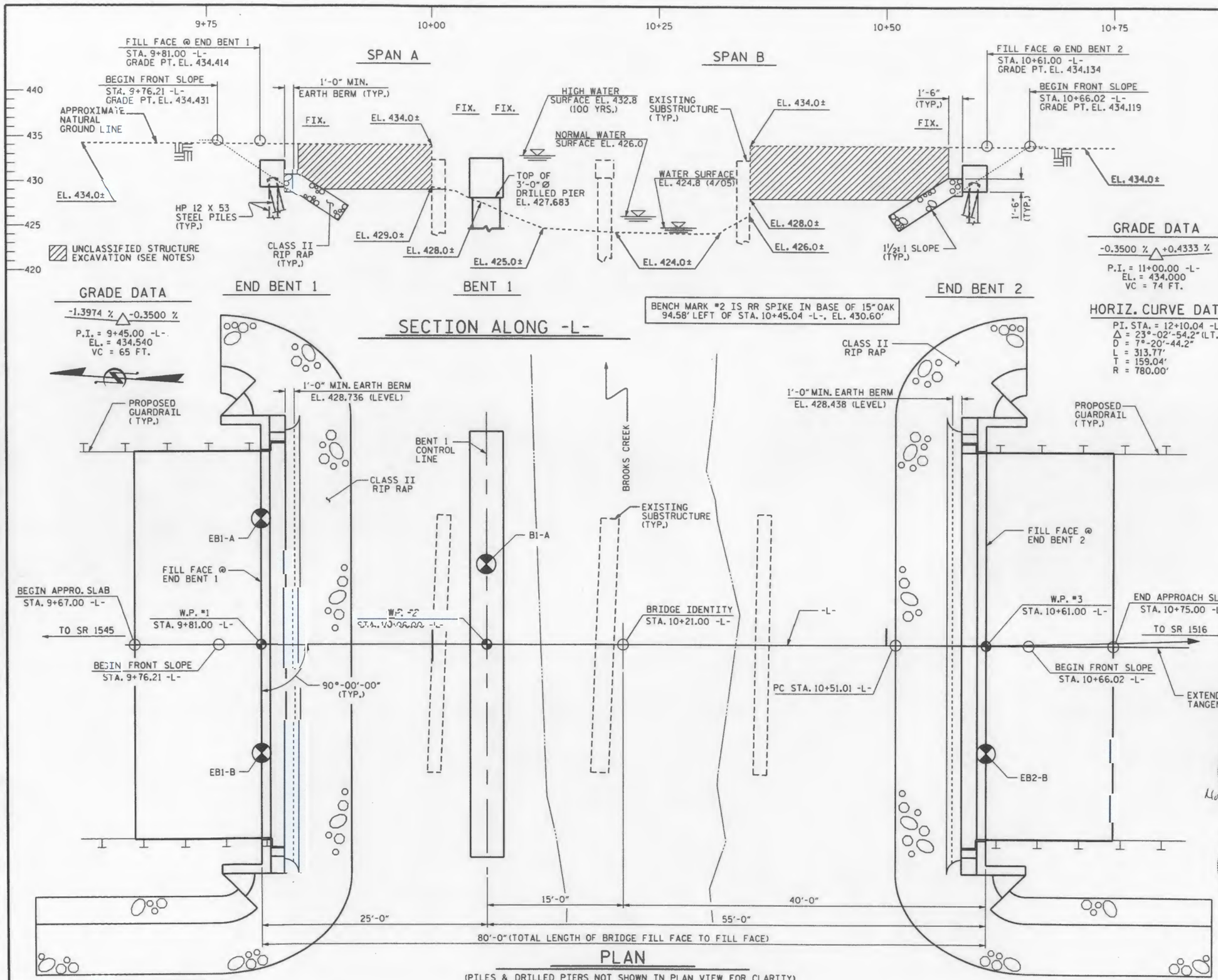

NOTES

ASSUMED LIVE LOAD = HS 20 OR ALTERNATE LOADING, EXCEPT THAT THE CORED SLAB UNITS HAVE BEEN DESIGNED FOR HS 25.

FOR OTHER DESIGN DATA AND GENERAL NOTES, SEE SHEET SN.

FOR EROSION CONTROL MEASURES SEE EROSION CONTROL PLANS.

THIS BRIDGE HAS BEEN DESIGNED BY THE STRENGTH DESIGN METHOD AS SPECIFIED IN AASHTO STANDARD SPECIFICATIONS.

THE EXISTING STRUCTURE CONSISTING OF 2 SPANS @ 17'-9" (OVERALL LENGTH 35'-6") REINFORCED CONCRETE DECK ON TIMBER JOISTS WITH A CLEAR ROADWAY WIDTH OF 28'-0" ON TIMBER CAP AND PILE WITH CONCRETE ENCASEMENT END BENTS AND BENT AND LOCATED AT THE PROPOSED STRUCTURE SHALL BE REMOVED.

REMOVAL OF THE EXISTING BRIDGE SHALL BE PERFORMED SO AS NOT TO ALLOW DEBRIS TO FALL INTO THE WATER. THE CONTRACTOR SHALL REMOVE THE BRIDGE AND SUBMIT PLANS FOR DEMOLITION IN ACCORDANCE WITH ARTICLE 402-2 OF THE STANDARD SPECIFICATIONS.

THE SUBSTRUCTURE OF THE EXISTING BRIDGE INDICATED ON THE PLANS IS FROM THE BEST INFORMATION AVAILABLE. SINCE THIS INFORMATION IS SHOWN FOR THE CONVENIENCE OF THE CONTRACTOR, THE CONTRACTOR SHALL HAVE NO CLAIM WHATSOEVER AGAINST THE DEPARTMENT OF TRANSPORTATION FOR ANY DELAYS OR ADDITIONAL COST INCURRED BASED ON DIFFERENCES BETWEEN THE EXISTING BRIDGE SUBSTRUCTURE SHOWN ON THE PLANS AND THE ACTUAL CONDITIONS AT THE PROJECT SITE.

THE MATERIAL SHOWN IN THE CROSS-HATCHED AREA SHALL BE EXCAVATED FOR A DISTANCE OF 30 FT. EACH SIDE OF CENTERLINE ROADWAY AS DIRECTED BY THE ENGINEER. THIS WORK WILL BE PAID FOR AT THE CONTRACT LUMP SUM PRICE FOR UNCLASSIFIED STRUCTURE EXCAVATION. SEE SECTION 412 OF THE STANDARD SPECIFICATIONS.

THIS BRIDGE HAS BEEN DESIGNED IN ACCORDANCE WITH THE REQUIREMENTS OF THE AASHTO STANDARD SPECIFICATIONS FOR SEISMIC DESIGN OF HIGHWAY BRIDGES FOR SEISMIC PERFORMANCE CATEGORY A.

THIS STRUCTURE HAS BEEN DESIGNED IN ACCORDANCE WITH HEC 18, "EVALUATING SCOUR AT BRIDGES", MAY, 2001.

FOR SUBMITTAL OF WORKING DRAWINGS, SEE SPECIAL PROVISIONS.

FOR FALSEWORK AND FORMWORK, SEE SPECIAL PROVISIONS.

FOR CRANE SAFETY, SEE SPECIAL PROVISIONS.

FOR GROUT FOR STRUCTURES, SEE SPECIAL PROVISIONS.

FOR PRESTRESSED CONCRETE MEMBERS, SEE SPECIAL PROVISIONS.

FOR CURING CONCRETE, SEE SPECIAL PROVISIONS.

ASPHALT WEARING SURFACE IS INCLUDED IN THE ROADWAY QUANTITY ON ROADWAY PLANS.

NORTH CAROLINA PROFESSIONAL SEAL 12929 ENGINEER NORMAN WEBBETT BOLEJACK, JR. 9/15/11

NORTH CAROLINA PROFESSIONAL SEAL 14855 ENGINEER DOUGLAS R. CALDWELL 9-15-11

PROJECT NO. B-4064

CHATHAM COUNTY

STATION: 10+21.00 -L-

SHEET 1 OF 2 REPLACES BRIDGE #95

STATE OF NORTH CAROLINA
DEPARTMENT OF TRANSPORTATION
RALEIGH

GENERAL DRAWING
BRIDGE OVER BROOKS CREEK ON SR 1520 BETWEEN SR 1545 AND SR 1516

REVISIONS							SHEET NO.
NO.	BY:	DATE:	NO.	BY:	DATE:		1
1			3				TOTAL SHEETS
2			4				27

DRAWN BY : A.K. PATEL DATE : 8/07/06
CHECKED BY : J. MA / E.G.A. DATE : 7/9/10

CONTRACT # B00034

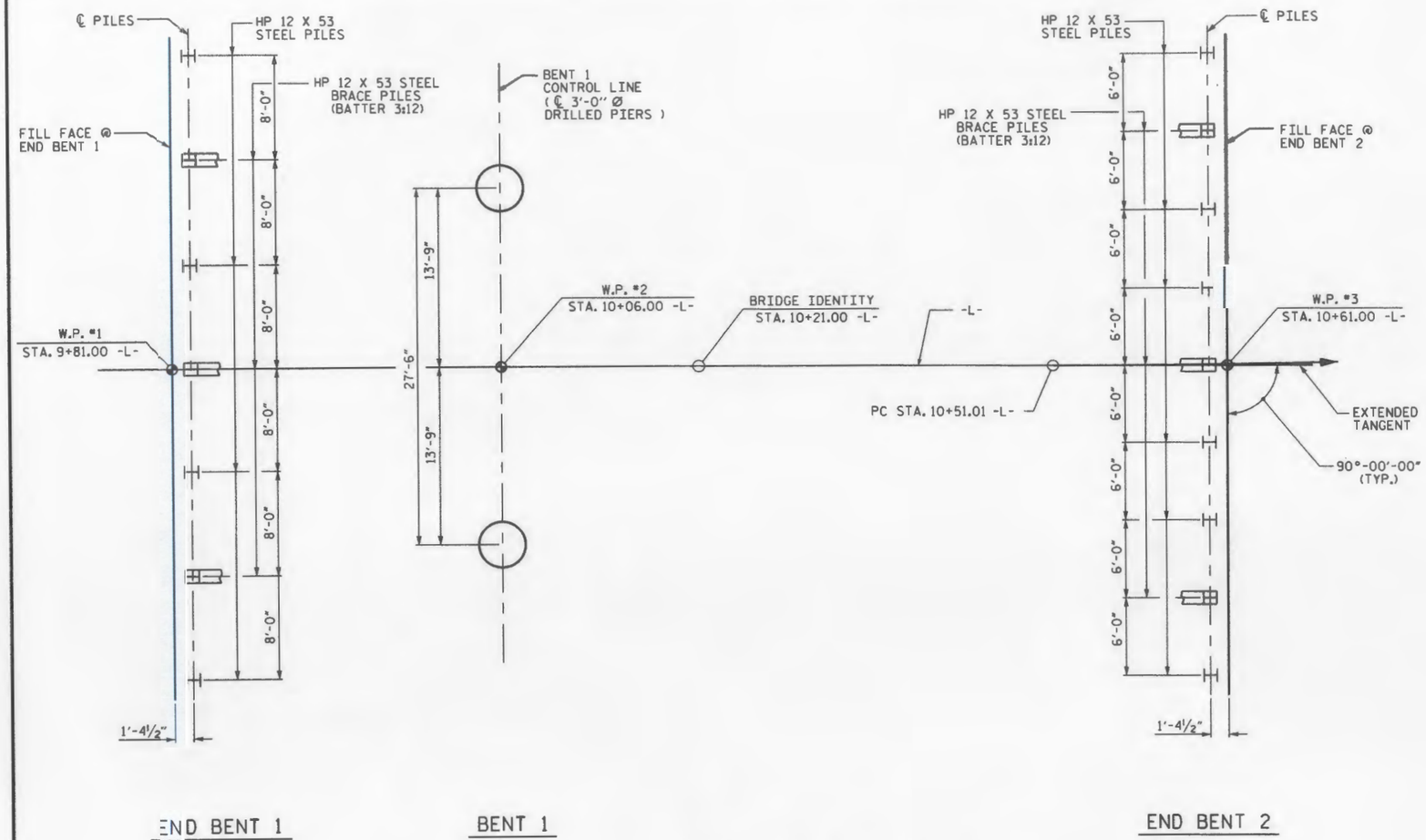

FOUNDATION LAYOUT

DIMENSIONS LOCATING END BENT PILES & BENT DRILLED PIERS ARE SHOWN TO CENTERLINE OF PILES AND DRILLED PIERS.

FOUNDATION NOTES

DRIVE PILES AT END BENT 1 AND END BENT 2 TO A REQUIRED BEARING CAPACITY OF 100 TONS PER PILE. THE REQUIRED BEARING CAPACITY IS EQUAL TO THE ALLOWABLE BEARING CAPACITY WITH A MINIMUM FACTOR OF SAFETY OF TWO.

THE ALLOWABLE BEARING CAPACITY FOR PILES AT END BENT 1 AND END BENT 2 IS 50 TONS PER PILE.

DRILLED PIERS AT BENT 1 ARE DESIGNED FOR BOTH SKIN FRICTION AND END BEARING. CHECK FIELD CONDITIONS FOR THE REQUIRED END BEARING CAPACITY OF 39 TSF.

DRILLED PIERS AT BENT 1 ARE DESIGNED FOR AN APPLIED LOAD OF 208 TONS EACH AT THE TOP OF THE COLUMN.

PERMANENT STEEL CASING MAY BE REQUIRED FOR DRILLED PIERS AT BENT 1. IF REQUIRED, DO NOT EXTEND THE CASING BELOW ELEVATION 420 FT. WITHOUT PRIOR APPROVAL FROM THE ENGINEER. THE ENGINEER WILL DETERMINE THE NEED FOR PERMANENT STEEL CASING. SEE DRILLED PIERS SPECIAL PROVISION.

DRILLED PIERS AT BENT 1 SHALL EXTEND TO AN ELEVATION NO HIGHER THAN 414 FT. AND SATISFY THE REQUIRED END BEARING CAPACITY.

FOR DRILLED PIERS, SEE DRILLED PIERS SPECIAL PROVISION.

SPT TESTING IS NOT REQUIRED TO DETERMINE THE END BEARING CAPACITY OF THE DRILLED PIERS AT BENT 1. SEE DRILLED PIERS SPECIAL PROVISION.

SID INSPECTIONS MAY BE REQUIRED TO INSPECT THE BOTTOM CLEANLINESS OF THE DRILLED PIERS AT BENT 1. THE ENGINEER WILL DETERMINE THE NEED FOR SID INSPECTIONS. SEE DRILLED PIERS SPECIAL PROVISION.

CSL TUBES ARE REQUIRED AND CSL TESTING MAY BE REQUIRED FOR THE DRILLED PIERS. THE ENGINEER WILL DETERMINE THE NEED FOR CSL TESTING. SEE CROSSHOLE SONIC LOGGING SPECIAL PROVISION.

THE SCOUR CRITICAL ELEVATION FOR BENT 1 IS ELEVATION 418 FT. SCOUR CRITICAL ELEVATIONS ARE USED TO MONITOR POSSIBLE SCOUR PROBLEMS DURING THE LIFE OF THE STRUCTURE.

TOTAL BILL OF MATERIAL

	REMOVAL OF EXISTING STRUCTURE	3'-0" Ø DRILLED PIERS IN SOIL	3'-0" Ø DRILLED PIERS NOT IN SOIL	PERMANENT STEEL CASING FOR 3'-0" Ø DRILLED PIER	SID INSPECTION	CROSSHOLE SONIC LOGGING	UNCLASSIFIED STRUCTURE EXCAVATION	CLASS A CONCRETE	BRIDGE APPROACH SLABS	REINFORCING STEEL	SPIRAL COLUMN REINFORCING STEEL	HP 12X53 STEEL PILES		CONCRETE BARRIER RAIL	RIP RAP CLASS II (2'-0" THICK)	FILTER FABRIC FOR DRAINAGE	ELASTOMERIC BEARINGS	3'-0" X 1'-9" PRESTRESSED CONCRETE CORED SLAB UNITS	
	LUMP SUM	LIN. FT.	LIN. FT.	LIN. FT.	EACH	EACH	LUMP SUM	CU. YDS.	LUMP SUM	LBS.	LBS.	NO.	LIN. FT.	LIN. FT.	TONS	SQ. YDS.	LUMP SUM	NO.	LIN. FT.
SUPERSTRUCTURE									LUMP SUM					155.50			LUMP SUM	30	1164.38
END BENT 1							LUMP SUM	19.1		2732		7	70		91	101			
BENT 1		14.5	13.0	15.4				29.0		6977	524								
END BENT 2							LUMP SUM	19.7		2754		9	90		103	114			
TOTAL	LUMP SUM	14.5	13.0	15.4	1	1	LUMP SUM	67.8	LUMP SUM	12,463	524	16	160	155.50	194	215	LUMP SUM	30	1164.38

NORTH CAROLINA PROFESSIONAL SEAL 14855 ENGINEER DOUGLAS R. CALHOUN
9-15-11

PROJECT NO. B-4064
CHATHAM COUNTY
STATION: 10+21.00 -L-

SHEET 2 OF 2

STATE OF NORTH CAROLINA
DEPARTMENT OF TRANSPORTATION
RALEIGH

GENERAL DRAWING
BRIDGE OVER BROOKS CREEK
ON SR 1520 BETWEEN
SR 1545 AND SR 1516

REVISIONS						SHEET NO.
NO.	BY:	DATE:	NO.	BY:	DATE:	2
1			3			TOTAL SHEETS
2			4			27

DRAWN BY : A.K. PATEL DATE : 8/07/06
CHECKED BY : J. NYA / E.C.A. DATE : 7/9/10

PROJECT REFERENCE NO.	SHEET NO.
B-4064	
R/W SHEET NO.	
ROADWAY DESIGN ENGINEER	

NORTH CAROLINA PROFESSIONAL SEAL 18803 ENGINEER GREGORY E. BREW 9-16-11

GUARDRAIL SUMMARY			
SURVEY LINE	BEG. STA.	END STA.	LOCATION
-L-	9+06.00	9+81.00	RT
-L-	9+06.00	9+81.00	LT
-L-	10+61.00	11+36.00	RT
-L-	10+61.00	11+36.00	LT

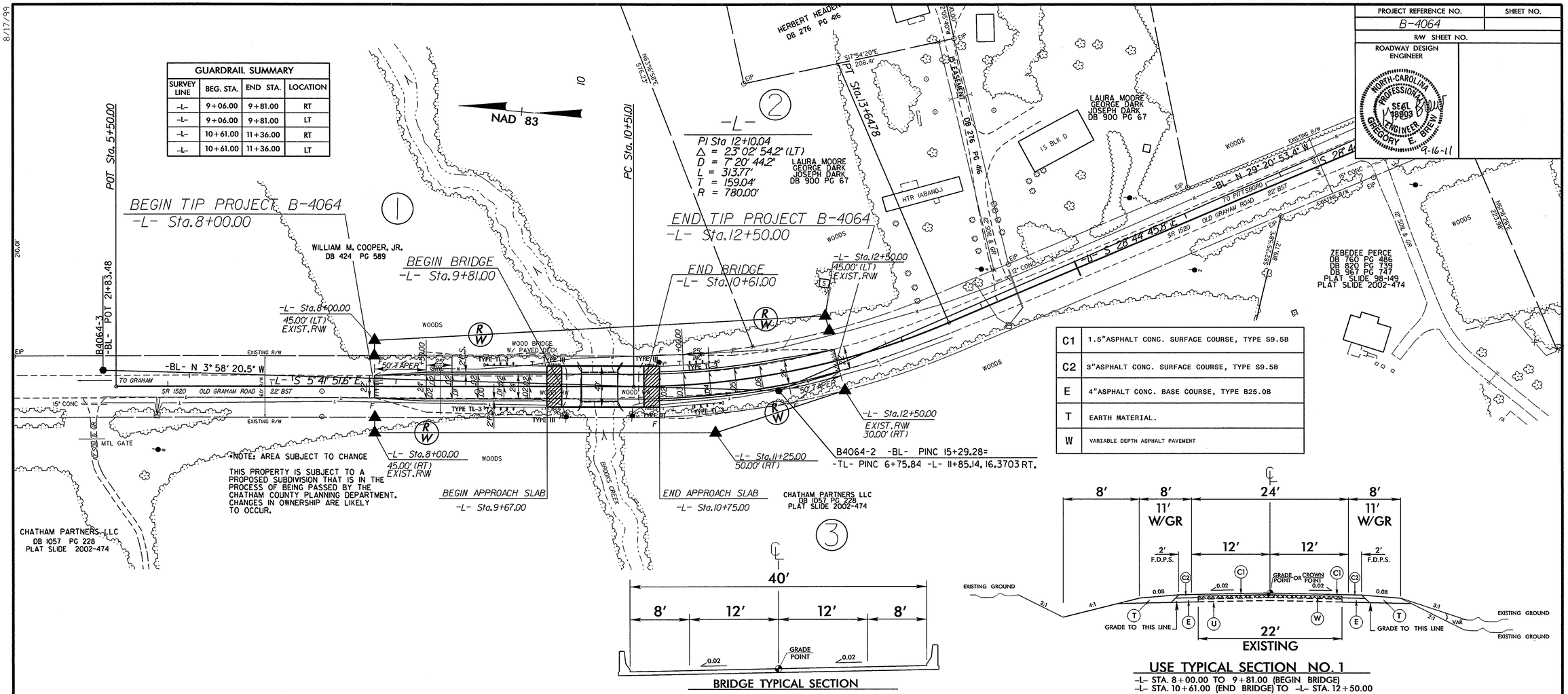

C1	1.5"ASPHALT CONC. SURFACE COURSE, TYPE S9.5B
C2	3"ASPHALT CONC. SURFACE COURSE, TYPE S9.5B
E	4"ASPHALT CONC. BASE COURSE, TYPE B25.0B
T	EARTH MATERIAL.
W	VARIABLE DEPTH ASPHALT PAVEMENT

BRIDGE TYPICAL SECTION

USE TYPICAL SECTION NO. 1

-L- STA. 8+00.00 TO 9+81.00 (BEGIN BRIDGE)
-L- STA. 10+61.00 (END BRIDGE) TO -L- STA. 12+50.00

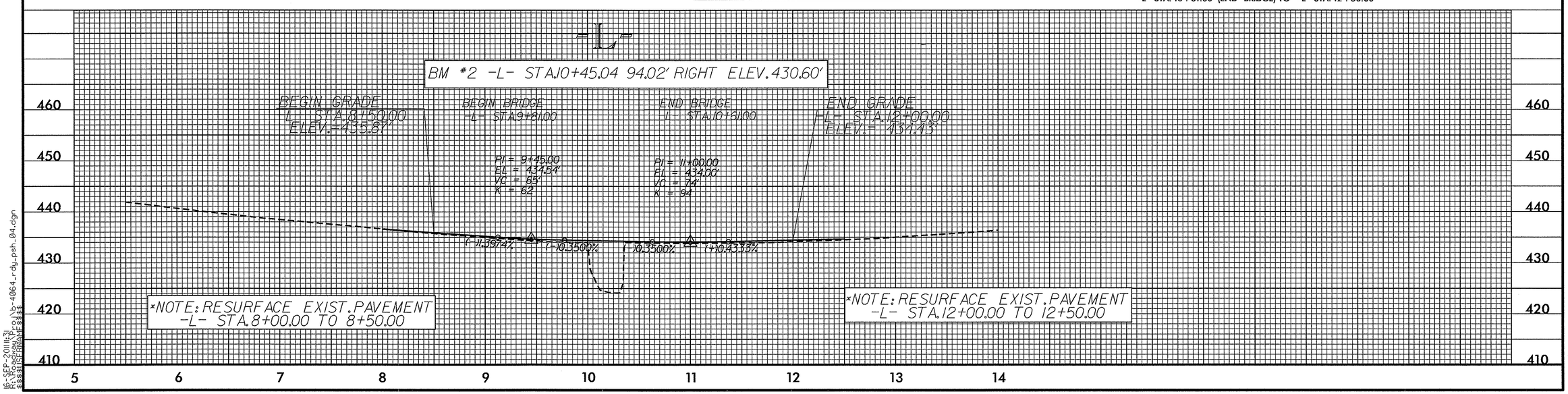

8/17/99

16-SEP-2011 11:31
r:\roadway\proj\b-4064_rdy_psh_04.dgn
$$$$USERNAME$$$$

RD245126L 9/16/2011 b-4064_rdy_psh_04 gbrew RD-Oce860-34

PROJ. REFERENCE NO.	SHEET NO.
B-4064	4

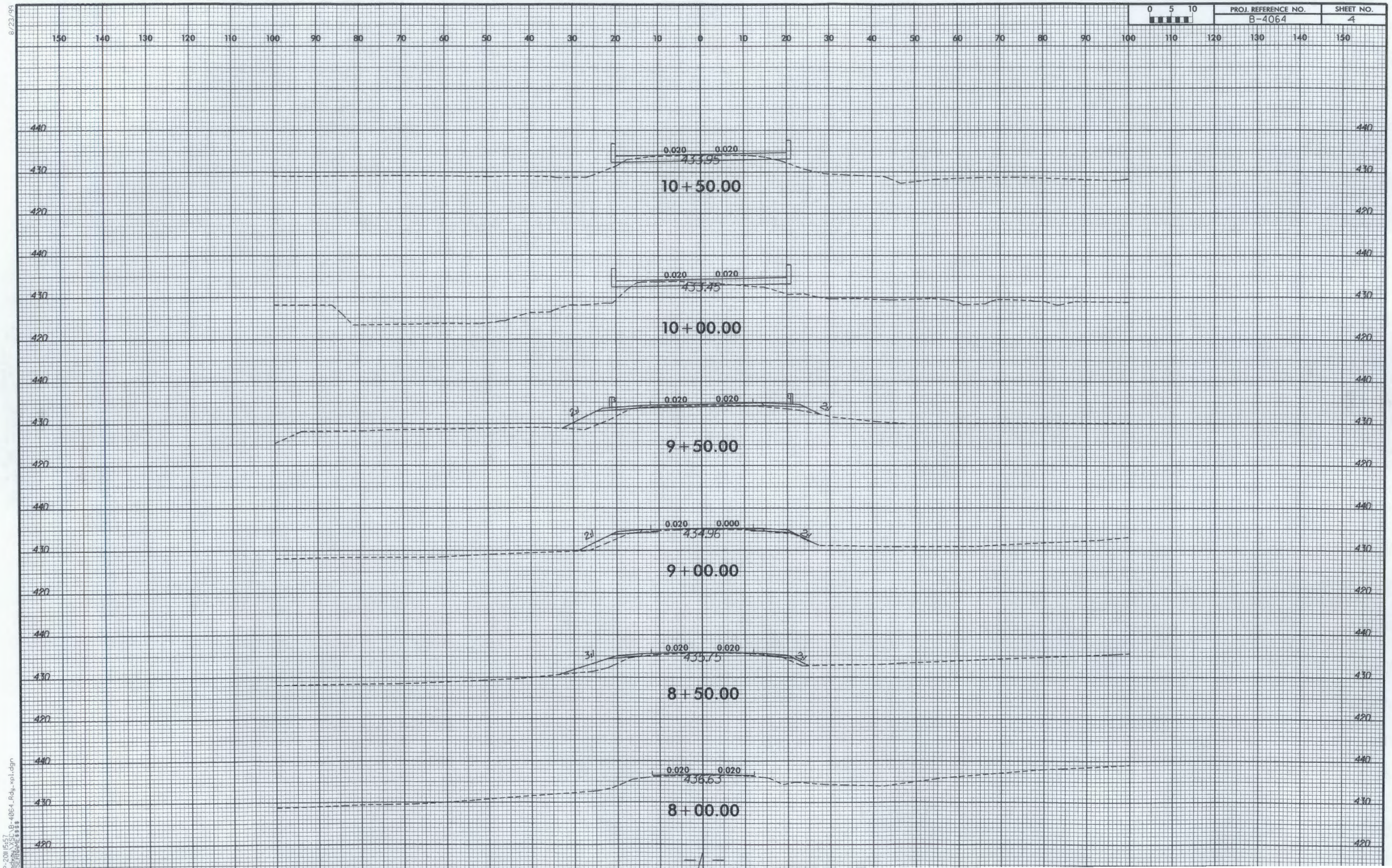

8/23/99
8-23-2011 15:57
B-4064_Rdg_xpl.dgn

PROJ. REFERENCE NO.	SHEET NO.
B-4064	5

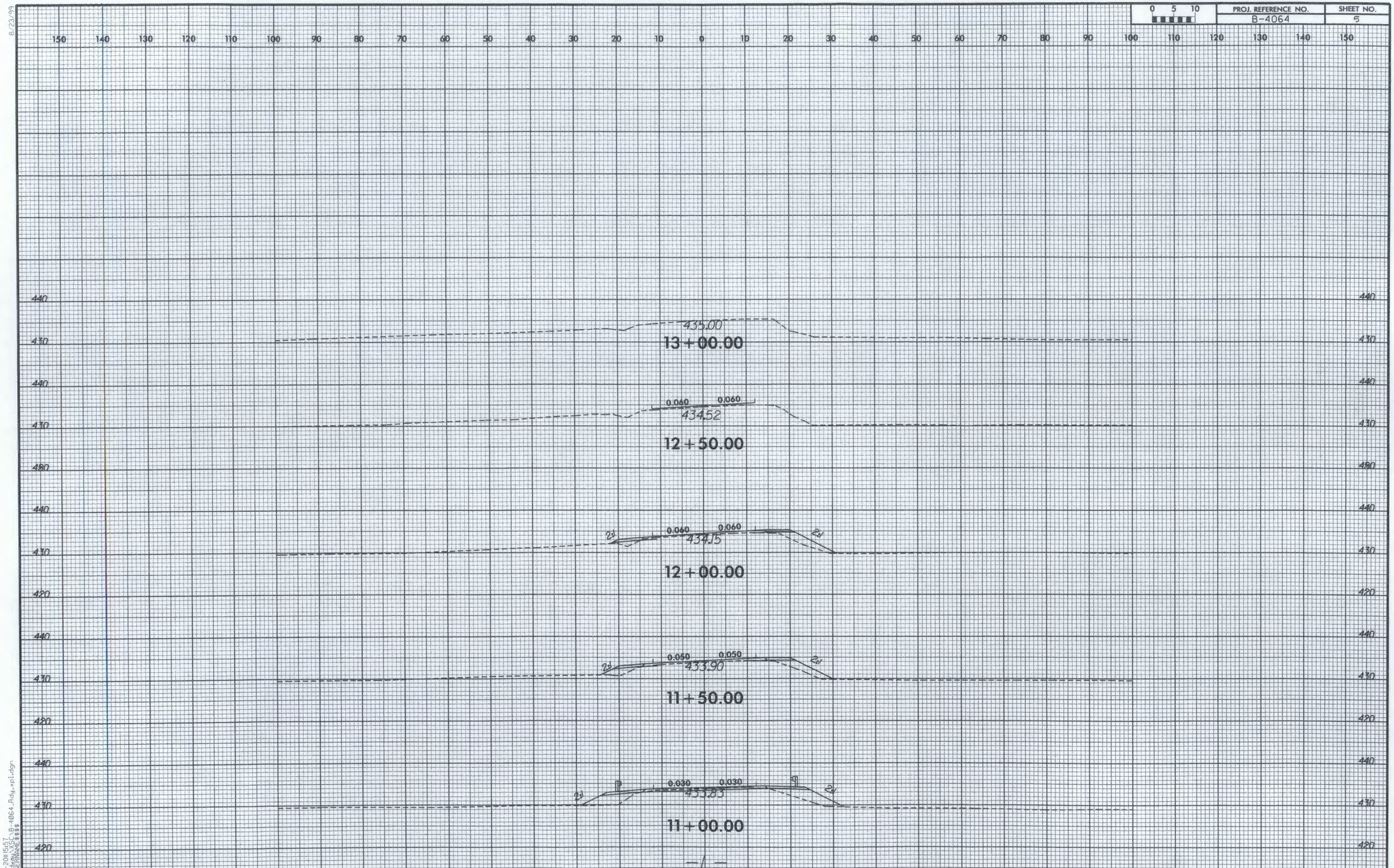

8/23/99

-20 11:55:7
B-4064_Rdy_xpl.dgn
$$$$

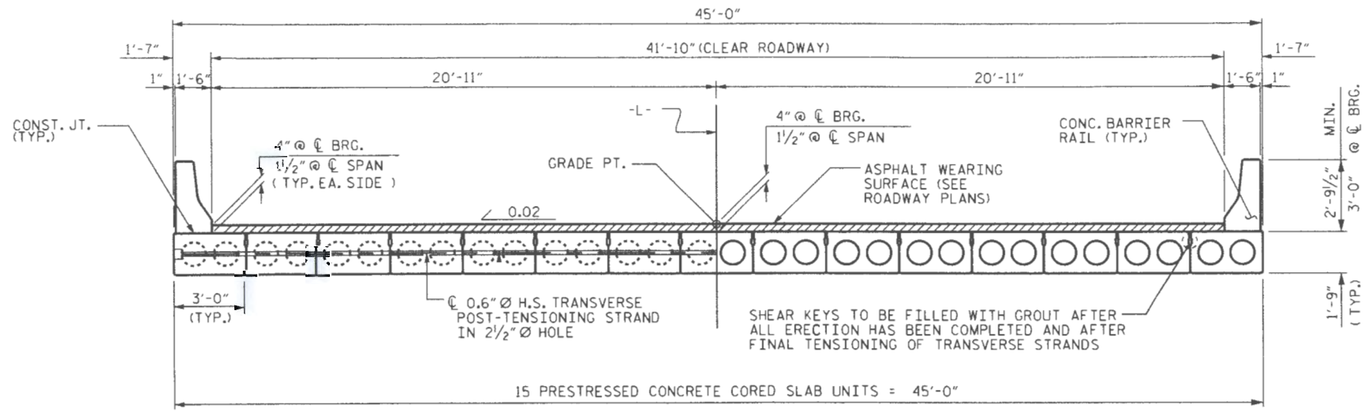

HALF-SECTION AT INTERMEDIATE DIAPHRAGMS

HALF-SECTION AT 12" Ø VOIDS

TYPICAL SECTION

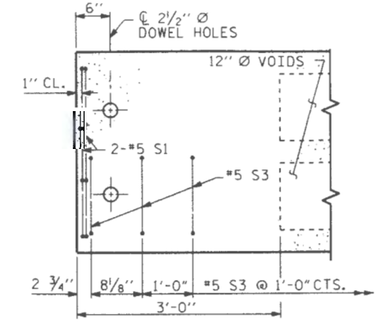

PART PLAN-EXTERIOR SECTION

NOTE: EXTERIOR SECTION SHOWN-INTERIOR SECTION SIMILAR EXCEPT OMIT S3 BARS.

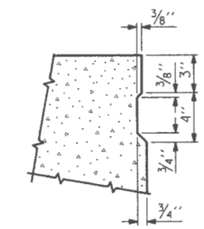

SHEAR KEY DETAIL

NOTE: OMIT SHEAR KEY ON OUTSIDE FACE OF EXTERIOR CORED SLABS.

FIXED END

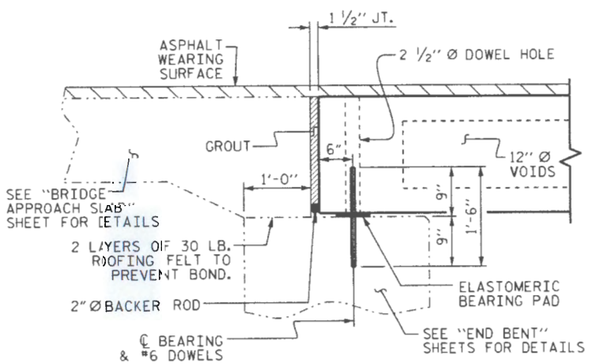

SECTION AT END BENT

FIXED END FIXED END

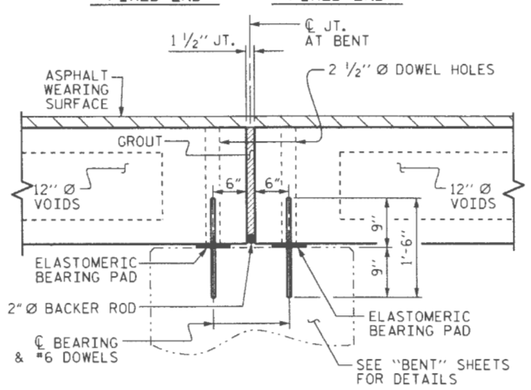

SECTION AT BENT

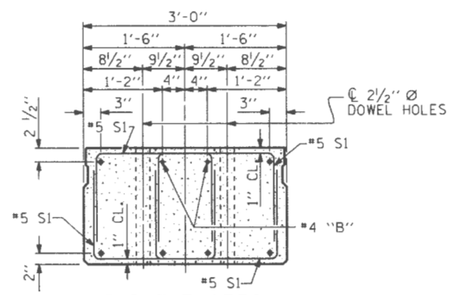

END ELEVATION

SHOWING PLACEMENT OF DOUBLE STIRRUPS AND LOCATION OF DOWEL HOLES.
(STRAND LAYOUT NOT SHOWN.)
INTERIOR SLAB SECTION SHOWN-EXTERIOR SLAB SECTION SIMILAR EXCEPT SHEAR KEY LOCATION.

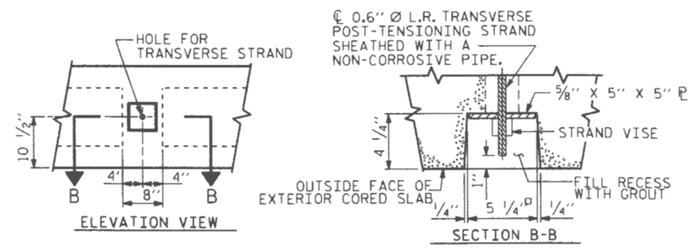

GROUTED RECESS AT END OF POST-TENSIONED STRAND CORED SLABS

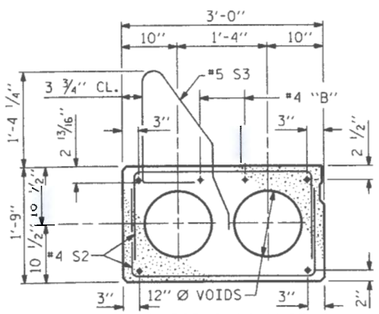

EXTERIOR SLAB SECTION

(FOR PRESTRESSED STRAND LAYOUT. SEE INTERIOR SLAB SECTION.)

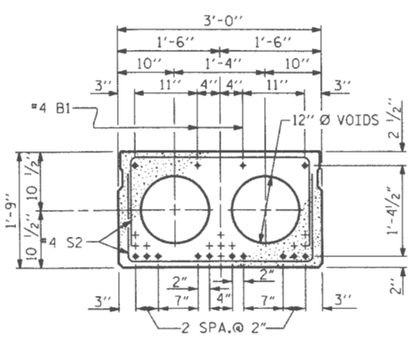

INTERIOR SLAB SECTION

(12 STRANDS)

0.6" Ø LOW RELAXATION STRAND LAYOUT

(SPAN A)

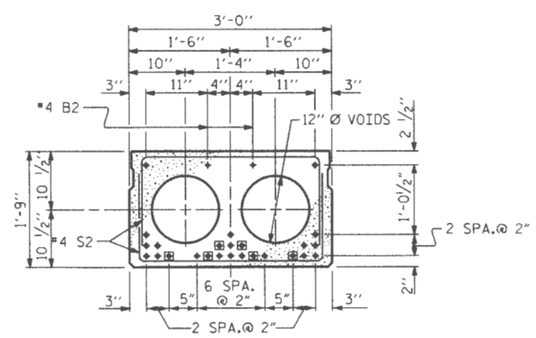

INTERIOR SLAB SECTION

(25 STRANDS, 6 SHEATHED)

◉ BOND SHALL BE BROKEN ON THESE STRANDS FOR A DISTANCE OF 4'-3" FROM END OF CORED SLAB UNIT, SEE STANDARD SPECIFICATIONS ARTICLE 1078-7.

0.6" Ø LOW RELAXATION STRAND LAYOUT

(SPAN B)

PROJECT NO. B-4064
CHATHAM COUNTY
STATION: 10+21.00 -L-

SHEET 1 OF 4

STATE OF NORTH CAROLINA
DEPARTMENT OF TRANSPORTATION
RALEIGH

STANDARD

3'-0" X 1'-9"
PRESTRESSED CONCRETE
CORED SLAB UNIT

NORTH CAROLINA PROFESSIONAL SEAL 14855 ENGINEER DOUGLAS R. CALHOUN
4-15-11

REVISIONS						SHEET NO.
NO.	BY:	DATE:	NO.	BY:	DATE:	6
1			3			TOTAL SHEETS
2			4			27

ASSEMBLED BY : A. K. PATEL DATE : 07/06
CHECKED BY : J. MYA / E.G.A. DATE : 7/9/10

DRAWN BY : WJH 4/89
CHECKED BY : FCW 1/89

REV. 10/17/00 RWW/LES
REV. 7/10/01RR RWW/LES
REV. 5/11/06 TLA/CM

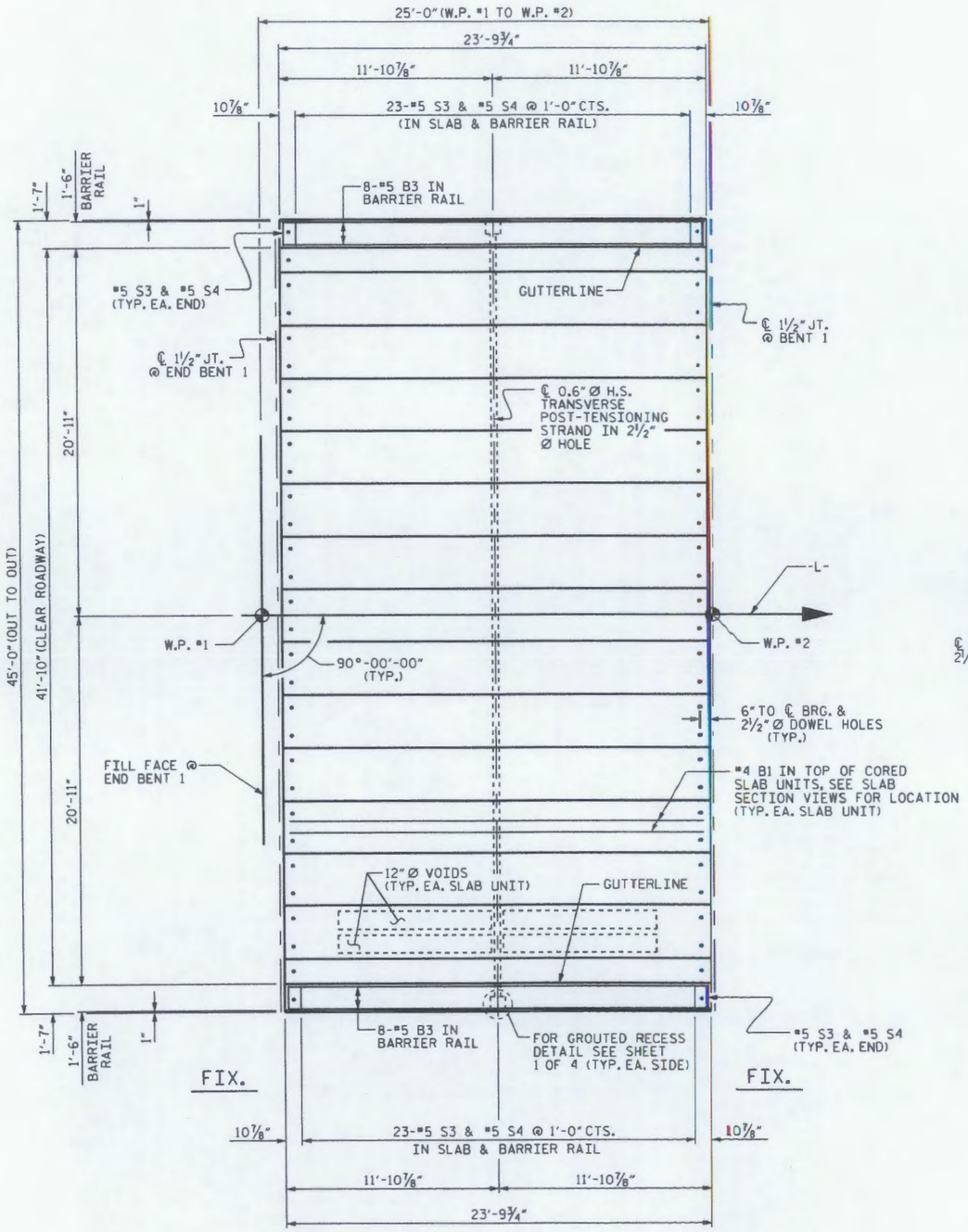

PLAN OF SPAN A

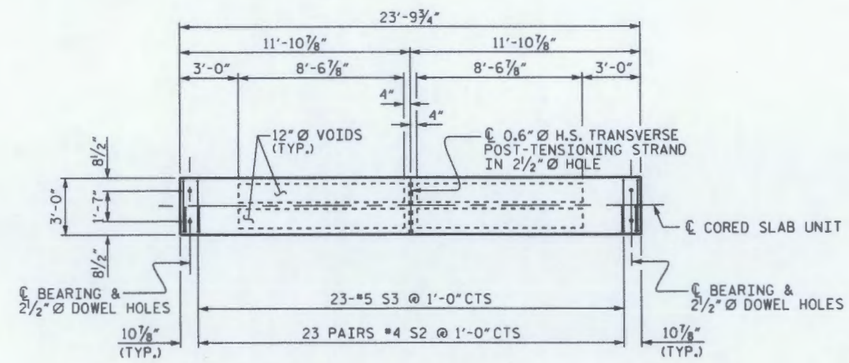

PLAN OF CORED SLAB UNIT - SPAN A

NOTE: EXTERIOR UNIT SHOWN-INTERIOR UNIT SIMILAR EXCEPT OMIT S3 BARS. FOR REINFORCING STEEL IN END OF CORED SLAB UNIT, SEE 'PART PLAN EXTERIOR SECTION', SHEET 1 OF 4.

PROJECT NO. B-4064

CHATHAM COUNTY

STATION: 10+21.00 -L-

SHEET 2 OF 4

STATE OF NORTH CAROLINA
DEPARTMENT OF TRANSPORTATION
RALEIGH

SUPERSTRUCTURE
PLAN OF SPAN A

NORTH CAROLINA PROFESSIONAL SEAL 14855 ENGINEER DOUGLAS R. CALHOUN
9-15-11

REVISIONS								SHEET NO.
NO.	BY:	DATE:	NO.	BY:	DATE:			7
1			3					TOTAL SHEETS
2			4					27

DRAWN BY : A. K. PATEL DATE : 07/06
CHECKED BY : J. MYA & E.G.A. DATE : 7/12/10

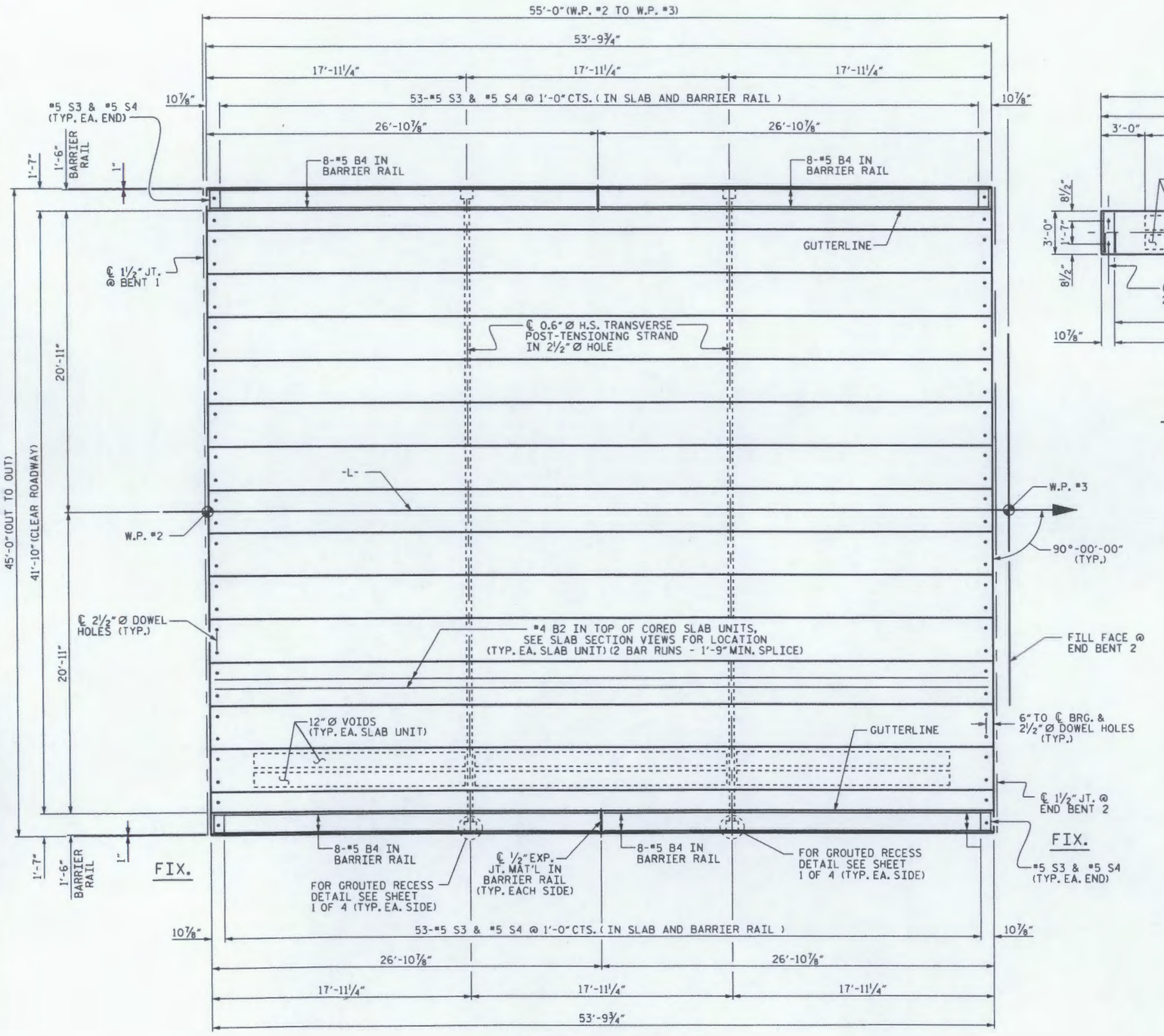

PLAN OF SPAN B

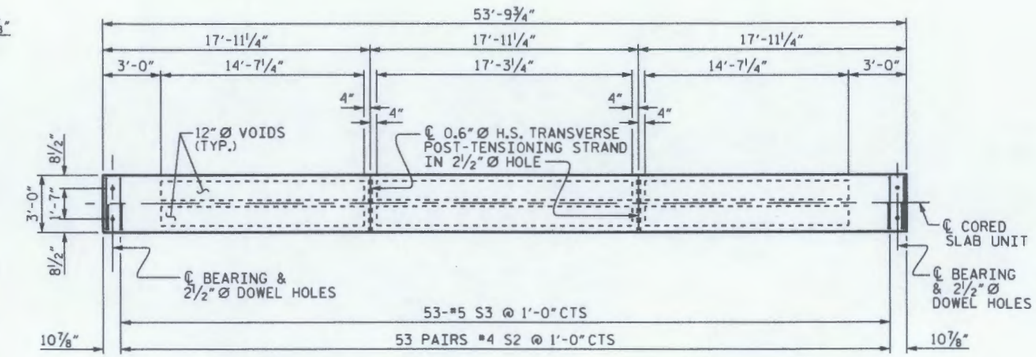

PLAN OF CORED SLAB UNIT - SPAN B

NOTE: EXTERIOR UNIT SHOWN-INTERIOR UNIT SIMILAR EXCEPT OMIT S3 BARS. FOR REINFORCING STEEL IN END OF CORED SLAB UNIT, SEE 'PART PLAN EXTERIOR SECTION', SHEET 1 OF 4.

PROJECT NO. B-4064

CHATHAM COUNTY

STATION: 10+21.00 -L-

SHEET 3 OF 4

STATE OF NORTH CAROLINA
DEPARTMENT OF TRANSPORTATION
RALEIGH

SUPERSTRUCTURE
PLAN OF SPAN B

NORTH CAROLINA PROFESSIONAL SEAL 14855 ENGINEER DOUGLAS R. CALHOUN
12-15-11

REVISIONS								SHEET NO.
NO.	BY:	DATE:	NO.	BY:	DATE:			8
1			3					TOTAL SHEETS
2			4					27

DRAWN BY : A. K. PATEL DATE : 07/06
CHECKED BY : J. MYA & E.G.A. DATE : 7/12/10

CORED SLABS REQUIRED

SPAN A	NUMBER	LENGTH	TOTAL LENGTH
EXTERIOR C.S.	2	23'-9¾"	47'-7½"
INTERIOR C.S.	13	23'-9¾"	309'-6¾"
SPAN B	NUMBER	LENGTH	TOTAL LENGTH
EXTERIOR C.S.	2	53'-9¾"	107'-7½"
INTERIOR C.S.	13	53'-9¾"	699'-6¾"
TOTAL	30		1164'-4½"

DEAD LOAD DEFLECTION AND CAMBER

	SPAN A	SPAN B
CAMBER (SLAB ALONE IN PLACE) ↑	5/16"	2⅝"
DEFLECTION DUE TO SUPERIMPOSED DEAD LOAD** ↓	0	5/16"
FINAL CAMBER ↑	5/16"	2 5/16"

** INCLUDES FUTURE WEARING SURFACE

GRADE 270 STRANDS

	0.6" Ø L.R.
AREA (SQUARE INCHES)	0.217
ULTIMATE STRENGTH (LBS. PER STRAND)	58,600
APPLIED PRESTRESS (LBS. PER STRAND)	43,950

BAR TYPES

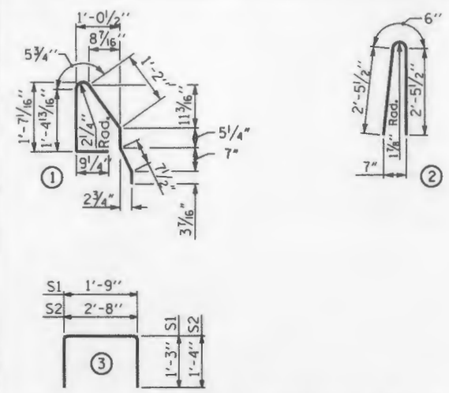

ALL BAR DIMENSIONS ARE OUT TO OUT

BILL OF MATERIAL FOR ONE CORED SLAB SECTION

SPAN A

BAR	NUMBER	SIZE	TYPE	EXTERIOR UNIT LENGTH	EXTERIOR UNIT WEIGHT	INTERIOR UNIT LENGTH	INTERIOR UNIT WEIGHT
B1	2	#4	STR	23'-5"	31	23'-5"	31
S1	8	#5	3	4'-3"	35	4'-3"	35
S2	46	#4	3	5'-4"	164	5'-4"	164
* S3	25	#5	1	5'-2"	135		
REINFORCING STEEL					230 LBS.		230 LBS.
* EPOXY COATED REINFORCING STEEL					135 LBS.		
5000 P.S.I. CONCRETE					3.6 CU. YDS.		3.6 CU. YDS.
0.6" Ø L.R. STRANDS			No.		12		12

SPAN B

BAR	NUMBER	SIZE	TYPE	EXTERIOR UNIT LENGTH	EXTERIOR UNIT WEIGHT	INTERIOR UNIT LENGTH	INTERIOR UNIT WEIGHT
B2	4	#4	STR	27'-8"	74	27'-8"	74
S1	8	#5	3	4'-3"	35	4'-3"	35
S2	106	#4	3	5'-4"	378	5'-4"	378
* S3	55	#5	1	5'-2"	296		
REINFORCING STEEL					487 LBS.		487 LBS.
* EPOXY COATED REINFORCING STEEL					296 LBS.		
5000 P.S.I. CONCRETE					7.8 CU. YDS.		7.8 CU. YDS.
0.6" Ø L.R. STRANDS			No.		25		25

NOTES

ALL PRESTRESSING STRANDS SHALL BE 7-WIRE LOW RELAXATION GRADE 270 STRANDS AND SHALL CONFORM TO AASHTO M203 EXCEPT FOR SAMPLING REQUIREMENTS WHICH SHALL BE IN ACCORDANCE WITH THE STANDARD SPECIFICATIONS.

ALL REINFORCING STEEL CAST WITH THE CORED SLAB SECTIONS SHALL BE GRADE 60 AND SHALL BE INCLUDED IN THE UNIT PRICE BID FOR PRESTRESSED CONCRETE CORED SLABS.

RECESSES FOR TRANSVERSE STRANDS SHALL BE GROUTED AFTER THE TENSIONING OF THE STRANDS.

THE 2½" Ø DOWEL HOLES AT FIXED ENDS OF SLAB SECTIONS SHALL BE FILLED WITH NON-SHRINK GROUT.

THE 2" Ø BACKER ROD SHALL CONFORM TO THE REQUIREMENTS OF TYPE M BOND BREAKER. SEE SECTION 1028 OF THE STANDARD SPECIFICATIONS.

WHEN CORED SLABS ARE CAST, A POSITIVE HOLD-DOWN SYSTEM SHALL BE EMPLOYED TO PREVENT VOIDS FROM RISING OR MOVING SIDEWAYS. THIS SYSTEM SHALL BE DESIGNED TO BE LEFT IN PLACE UNTIL THE CONCRETE HAS REACHED RELEASE STRENGTH. AT LEAST THREE WEEKS PRIOR TO CASTING CORED SLABS, THE CONTRACTOR SHALL SUBMIT TO THE ENGINEER FOR REVIEW AND COMMENT, DETAILED DRAWINGS OF THE PROPOSED HOLD-DOWN SYSTEM. IN ADDITION TO STRUCTURAL DETAILS, LOCATION AND SPACING OF THE HOLD-DOWNS SHALL BE INDICATED.

THE TRANSFER OF LOAD FROM THE ANCHORAGES TO THE CORED SLAB UNIT SHALL BE DONE WHEN THE CONCRETE HAS REACHED A COMPRESSIVE STRENGTH OF NOT LESS THAN 4000 PSI.

ALL REINFORCING STEEL IN BARRIER RAILS SHALL BE EPOXY COATED.

PRESTRESSING STRANDS SHALL BE CUT FLUSH WITH THE CORED SLAB UNIT ENDS.

APPLY EPOXY PROTECTIVE COATING TO CORED SLAB UNIT ENDS.

VERTICAL GROOVED CONTRACTION JOINTS, ½" IN DEPTH, SHALL BE TOOLED IN ALL EXPOSED FACES OF THE BARRIER RAIL AND IN ACCORDANCE WITH ARTICLE 825-10(B) OF THE STANDARD SPECIFICATIONS. A VERTICAL CONTRACTION JOINT SHALL BE LOCATED AT EACH THIRD POINT BETWEEN BARRIER RAIL EXPANSION JOINTS. ONLY ONE CONTRACTION JOINT IS REQUIRED AT MIDPOINT OF BARRIER RAIL SEGMENTS LESS THAN 20 FEET IN LENGTH AND NO CONTRACTION JOINTS ARE REQUIRED FOR THOSE SEGMENTS LESS THAN 10 FEET IN LENGTH.

TRANSVERSE POST TENSIONING OF THE CORED SLAB UNITS SHALL BE DONE IN ACCORDANCE WITH THE STANDARD SPECIFICATIONS, EXCEPT THAT THE STRANDS SHALL BE 0.6" Ø AND TENSIONED TO 43,950 POUNDS.

THE HEIGHT OF THE BARRIER RAIL VARIES WHILE THE TOP OF THE RAIL FOLLOWS THE PROFILE OF THE GUTTERLINE. SEE "TYPICAL SECTION" SHEET 1 OF 4 FOR OTHER DIMENSIONS OF THE RAIL.

FOR PRESTRESSED CONCRETE MEMBERS, SEE SPECIAL PROVISIONS.

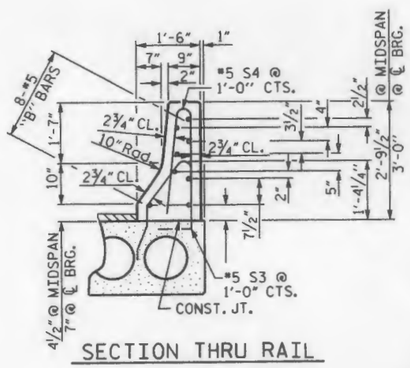

SECTION THRU RAIL

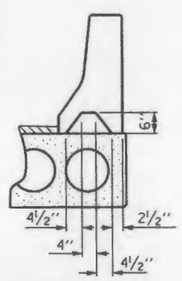

SECTION S-S

AT DAM IN OPEN JOINT
(THIS IS TO BE USED ONLY WHEN SLIP FORM IS USED)

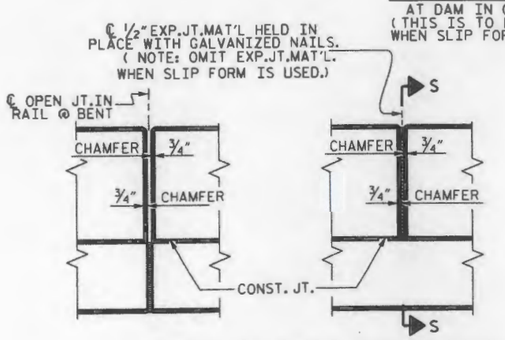

ELEVATION AT EXPANSION JOINTS

BARRIER RAIL DETAILS

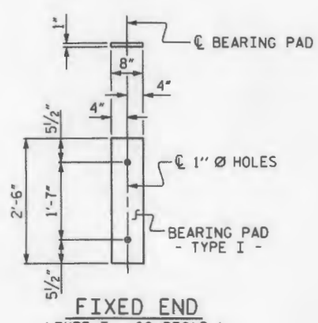

FIXED END
(TYPE I - 60 REQ'D)

ELASTOMERIC BEARING DETAILS

ELASTOMER IN BEARINGS FOR 18" & 21" CSU SHALL BE 50 DUROMETER HARDNESS.
ELASTOMER IN BEARINGS FOR 24" CSU SHALL BE 60 DUROMETER HARDNESS.

BILL OF MATERIAL FOR CONCRETE BARRIER RAIL

BAR	BARS PER SPAN SPAN A	BARS PER SPAN SPAN B	TOTAL NO.	SIZE	TYPE	LENGTH	WEIGHT
* B3	16		16	#5	STR	23'-5"	391
* B4		32	32	#5	STR	26'-6"	884
* S4	50	110	160	#5	2	5'-5"	904
* EPOXY COATED REINFORCING STEEL							2,179 LBS.
CLASS AA CONCRETE							16.9 CU. YDS.
TOTAL LENGTH OF CONCRETE BARRIER RAIL							155.50 LIN. FT.

NORTH CAROLINA PROFESSIONAL SEAL 14855 ENGINEER DOUGLAS R. CALHOUN
9-15-11

PROJECT NO. B-4064
CHATHAM COUNTY
STATION: 10+21.00 -L-

SHEET 4 OF 4

STATE OF NORTH CAROLINA
DEPARTMENT OF TRANSPORTATION
RALEIGH

STANDARD
3'-0" X 1'-9"
PRESTRESSED CONCRETE
CORED SLAB UNIT

REVISIONS						SHEET NO.
NO.	BY:	DATE:	NO.	BY:	DATE:	9
1			3			TOTAL SHEETS
2			4			27

ASSEMBLED BY : A. K. PATEL DATE : 07/06
CHECKED BY : J. MYA / E.G.A. DATE : 7/12/10
DRAWN BY : WJH 4/89
CHECKED BY : FCJ 5/89
REV. 7/10/01 RWW/LES
REV. 5/7/03 RRR RWW/JTE
REV. 5/11/05 RCH JLA/GM

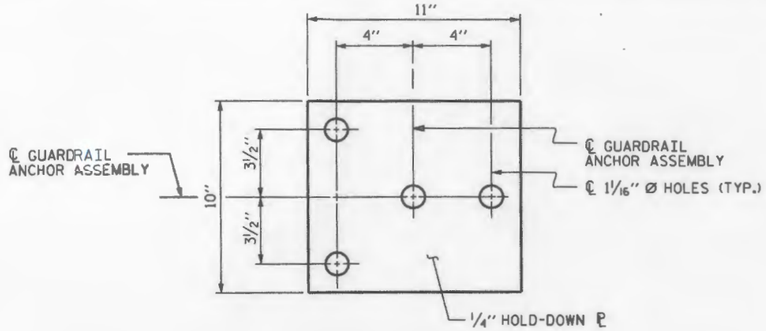

PLAN

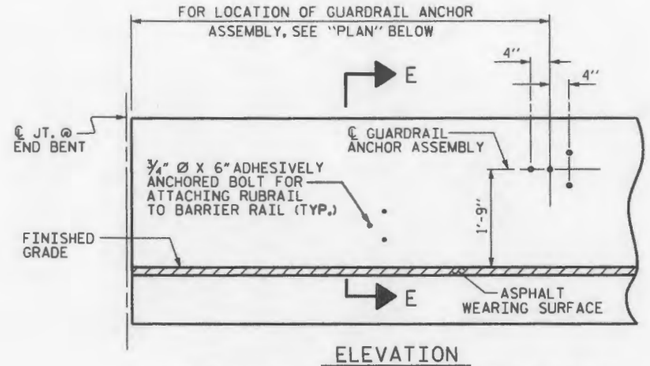

ELEVATION

FOR LOCATION OF RUBRAIL, SEE ROADWAY STD. 862.03

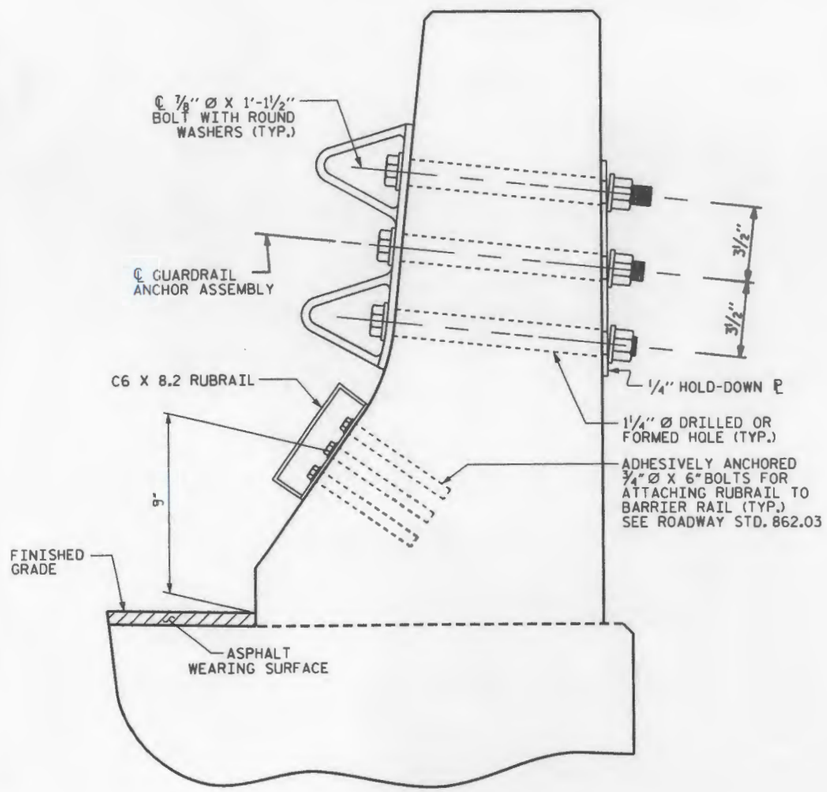

SECTION E-E

GUARDRAIL ANCHOR ASSEMBLY DETAILS

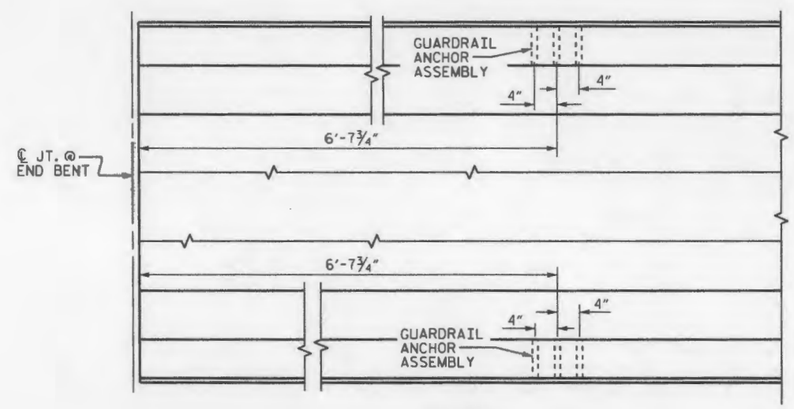

PLAN

LOCATION OF ANCHORS FOR GUARDRAIL

END BENT 1 SHOWN, END BENT 2 SIMILAR.

NOTES

THE GUARDRAIL ANCHOR ASSEMBLY SHALL CONSIST OF A 1/4" HOLD DOWN PLATE AND 4 - 7/8" Ø BOLTS WITH NUTS AND WASHERS, RUBRAIL, AND ADHESIVELY ANCHORED BOLTS.

THE HOLD-DOWN PLATE SHALL CONFORM TO AASHTO M270 GRADE 36. AFTER FABRICATION, THE HOLD-DOWN PLATE SHALL BE HOT-DIP GALVANIZED IN ACCORDANCE WITH AASHTO M111.

BOLTS SHALL CONFORM TO THE REQUIREMENTS OF ASTM A307 AND NUTS SHALL CONFORM TO THE REQUIREMENTS OF AASHTO M291. BOLTS, NUTS AND WASHERS SHALL BE GALVANIZED. (AT THE CONTRACTOR'S OPTION, STAINLESS STEEL BOLTS, NUTS AND WASHERS MAY BE USED AS AN ALTERNATE FOR THE 7/8" Ø GALVANIZED BOLTS, NUTS AND WASHERS. THEY SHALL CONFORM TO OR EXCEED THE MECHANICAL REQUIREMENTS OF ASTM A307. THE USE OF THIS ALTERNATE SHALL BE APPROVED BY THE ENGINEER.)

THE GUARDRAIL ANCHOR ASSEMBLY IS REQUIRED AT ALL POINTS WHERE APPROACH GUARDRAIL IS TO BE ATTACHED TO THE END OF BARRIER RAIL. FOR POINTS OF ATTACHMENT, SEE SKETCH.

AFTER INSTALLATION, THE EXPOSED THREAD OF THE BOLT SHALL BE BURRED WITH A SHARP POINTED TOOL.

THE COST OF THE GUARDRAIL ANCHOR ASSEMBLY SHALL BE INCLUDED IN THE UNIT CONTRACT PRICE BID FOR CONCRETE BARRIER RAIL.

THE 1 1/4" Ø HOLES SHALL BE FORMED OR DRILLED WITH A CORE BIT. IMPACT TOOLS WILL NOT BE PERMITTED. ANY CONCRETE DAMAGED BY THIS WORK SHALL BE REPAIRED TO THE SATISFACTION OF THE ENGINEER.

THE C6 X 8.2 RUBRAIL IS TO BE ADHESIVELY ANCHORED TO THE RAIL USING THREE 3/4" Ø X 6" BOLTS WITH WASHERS. LEVEL ONE FIELD TESTING IS REQUIRED, AND THE YIELD LOAD OF THE 3/4" Ø BOLT IS 12 KIPS. FOR ADHESIVELY ANCHORED ANCHOR BOLTS OR DOWELS, SEE SPECIAL PROVISIONS. SEE ROADWAY STANDARD 862.03 FOR DETAILS AND LOCATION OF THE RUBRAIL.

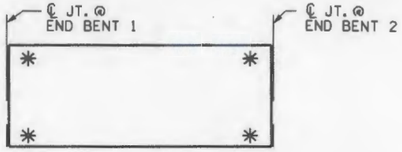

SKETCH SHOWING POINTS OF ATTACHMENTS

✳ DENOTES GUARDRAIL ANCHOR ASSEMBLY

PROJECT NO. B-4064

CHATHAM COUNTY

STATION: 10+21.00 -L-

NORTH CAROLINA PROFESSIONAL SEAL 14855 ENGINEER DOUGLAS R. CALHOUN

9-15-11

STATE OF NORTH CAROLINA
DEPARTMENT OF TRANSPORTATION
RALEIGH

STANDARD

GUARDRAIL ANCHORAGE FOR BARRIER RAIL

REVISIONS						SHEET NO.
NO.	BY:	DATE:	NO.	BY:	DATE:	10
1			3			TOTAL SHEETS
2			4			27

ASSEMBLED BY : J.L. WALTON	DATE : 5-28-09
CHECKED BY : J. MYA & E.G.A.	DATE : 7/12/10
DRAWN BY : TLA 5/06	ADDED 5/1/06R KMM/GM
CHECKED BY : GM 5/06	

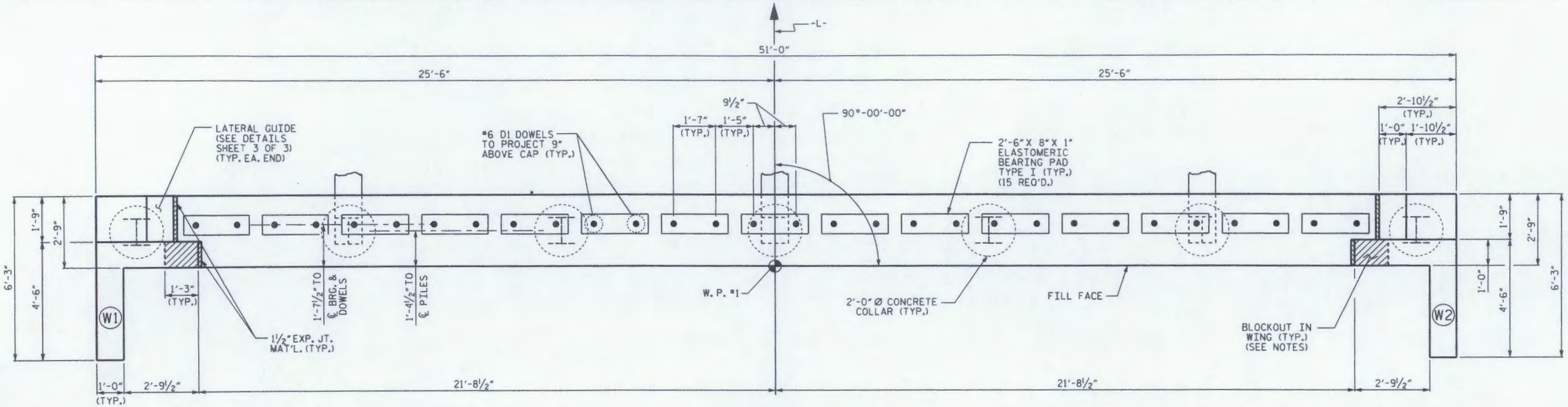

PLAN

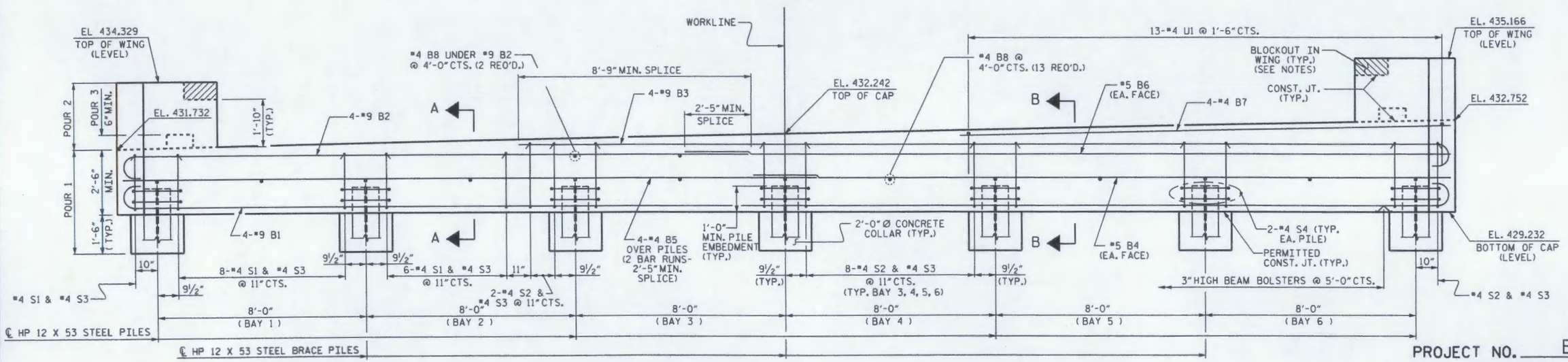

ELEVATION

NOTES:

STIRRUPS IN CAP MAY BE SHIFTED AS NECESSARY TO CLEAR DOWELS.

THE LATERAL GUIDE AT EACH END OF THE CAP IS NOT TO BE POURED UNTIL AFTER THE CORED SLAB UNITS ARE IN PLACE.

THE CONTRACTOR SHALL PROVIDE FOR INSTALLATION OF THE 4" DIAMETER DRAIN PIPE THROUGH THE WING WALL AS REQUIRED FOR REINFORCED BRIDGE APPROACH FILLS. SEE THE ROADWAY PLANS. REINFORCING STEEL IN THE WING WALL MAY BE SHIFTED AS NECESSARY TO CLEAR THE DRAIN PIPE.

THE CONCRETE IN THE SHADED AREA OF THE WING SHALL BE POURED AFTER THE BARRIER RAIL IS CAST IF SLIP FORMING IS USED.

NORTH CAROLINA PROFESSIONAL SEAL 14855 ENGINEER DOUGLAS R. CALHOUN
Douglas R. Calhoun 9-15-11

PROJECT NO. B-4064
CHATHAM COUNTY
STATION: 10+21.00 -L-

SHEET 1 OF 3

STATE OF NORTH CAROLINA
DEPARTMENT OF TRANSPORTATION
RALEIGH

SUBSTRUCTURE
END BENT 1

REVISIONS								SHEET NO.
NO.	BY:	DATE:	NO.	BY:	DATE:			11
1			3					TOTAL SHEETS
2			4					27

DRAWN BY : A. K. PATEL DATE : 7/06
CHECKED BY : J. MYA / E.G.A. DATE : 7/12/10

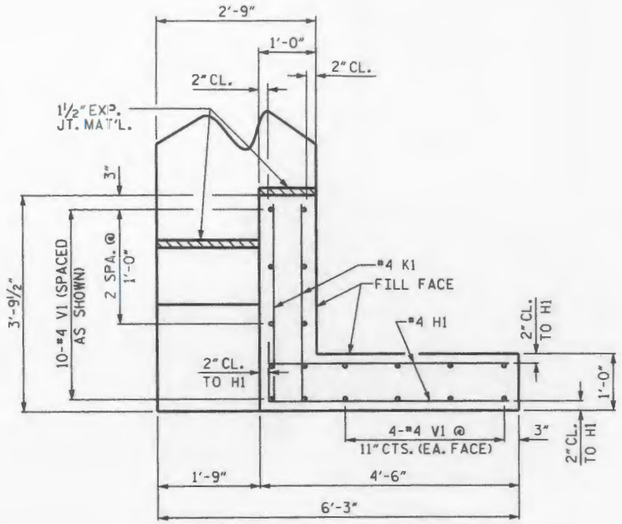

PLAN OF WING - (W1)

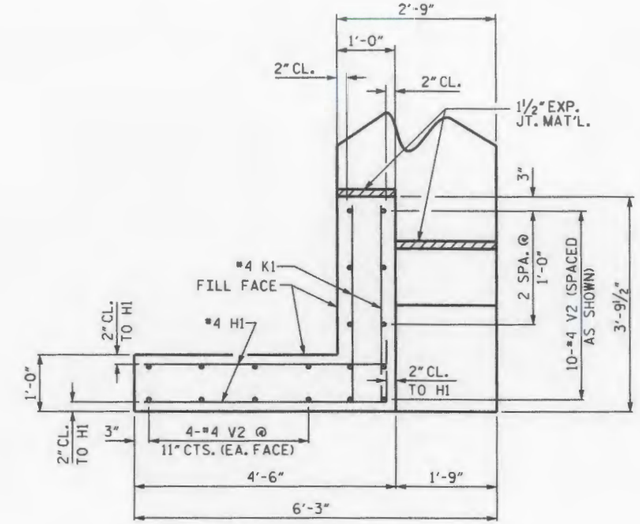

PLAN OF WING - (W2)

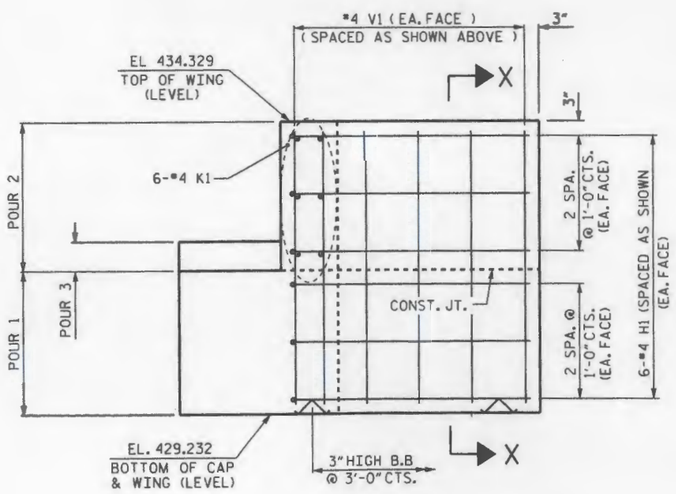

ELEVATION OF WING - (W1)

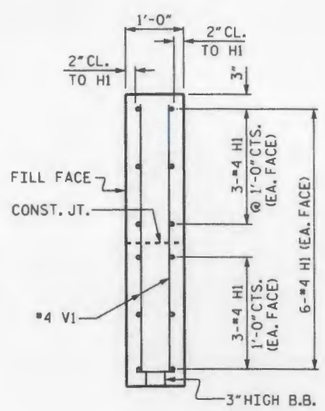

SECTION X-X

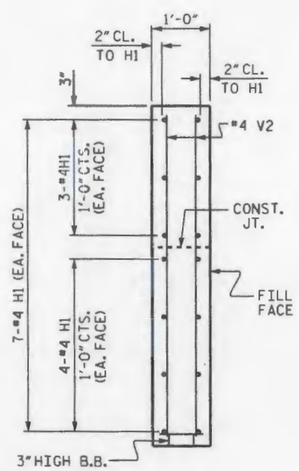

SECTION Y-Y

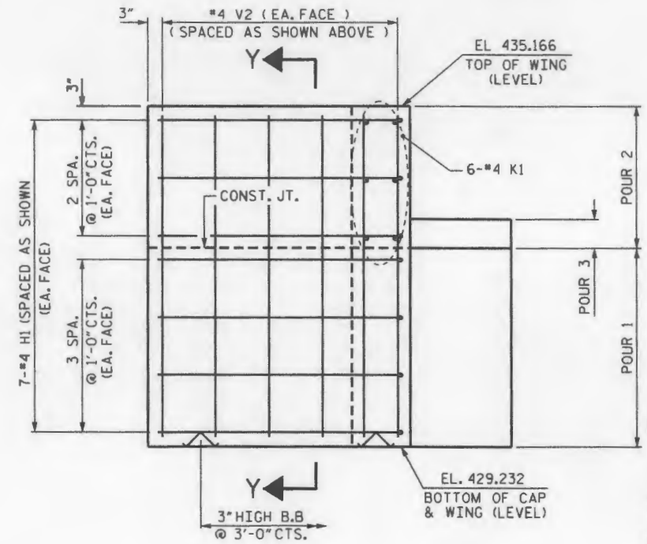

ELEVATION OF WING - (W2)

PROJECT NO. B-4064

CHATHAM COUNTY

STATION: 10+21.00 -L-

SHEET 2 OF 3

STATE OF NORTH CAROLINA
DEPARTMENT OF TRANSPORTATION
RALEIGH

SUBSTRUCTURE
END BENT 1

NORTH CAROLINA PROFESSIONAL SEAL 14855 ENGINEER DOUGLAS R. CALHOUN
9-15-11

REVISIONS							SHEET NO.
NO.	BY:	DATE:	NO.	BY:	DATE:		12
1			3				TOTAL SHEETS
2			4				27

DRAWN BY : A. K. PATEL DATE : 7/06

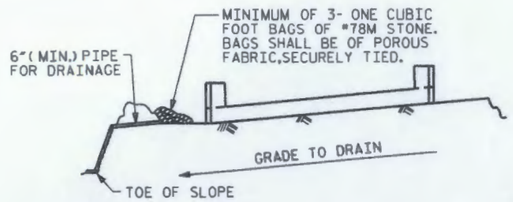

BAGGED STONE AND PIPE SHALL BE PLACED IMMEDIATELY AFTER COMPLETION OF END BENT EXCAVATION. PIPE MAY BE EITHER CONCRETE, CORRUGATED STEEL, CORRUGATED ALUMINUM ALLOY, OR CORRUGATED PLASTIC. PERFORATED PIPE WILL NOT BE ALLOWED.

BAGGED STONE SHALL REMAIN IN PLACE UNTIL THE ENGINEER DIRECTS THAT IT BE REMOVED. THE CONTRACTOR SHALL REMOVE AND DISPOSE OF SILT ACCUMULATIONS AT BAGGED STONE WHEN SO DIRECTED BY THE ENGINEER. BAGS SHALL BE REMOVED AND REPLACED WHENEVER THE ENGINEER DETERMINES THAT THEY HAVE DETERIORATED AND LOST THEIR EFFECTIVENESS.

NO SEPARATE PAYMENT WILL BE MADE FOR THIS WORK AND THE ENTIRE COST OF THIS WORK SHALL BE INCLUDED IN THE UNIT CONTRACT PRICE BID FOR THE SEVERAL PAY ITEMS.

TEMPORARY DRAINAGE AT END BENT

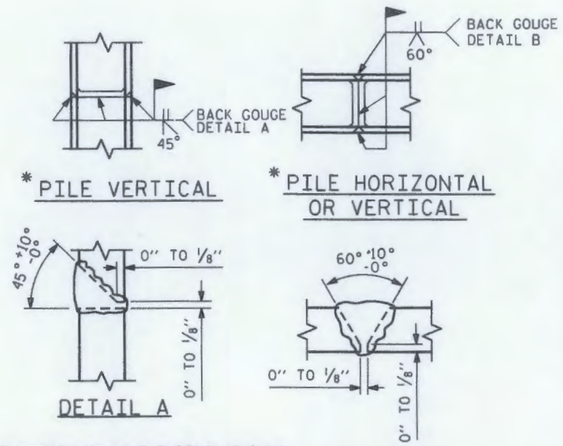

* POSITION OF PILE DURING WELDING.

PILE SPLICE DETAILS

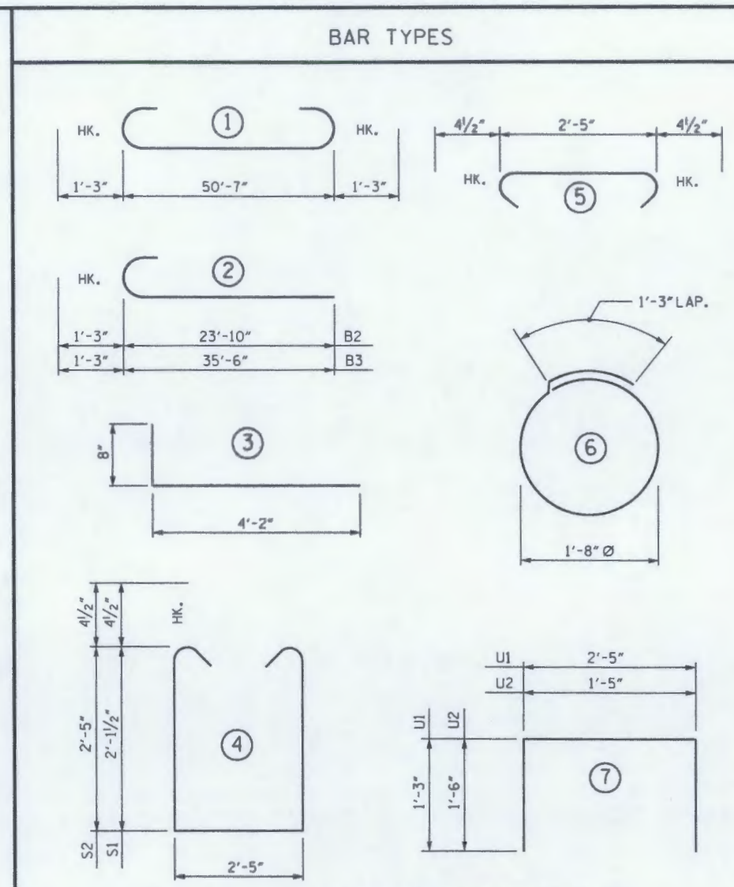

BILL OF MATERIAL
END BENT 1

BAR	NO.	SIZE	TYPE	LENGTH	WEIGHT
B1	4	#9	1	53'-1"	722
B2	4	#9	2	25'-1"	341
B3	4	#9	2	36'-9"	500
B4	2	#5	STR	50'-8"	106
B5	8	#4	STR	26'-7"	142
B6	2	#5	STR	29'-2"	61
B7	4	#4	STR	18'-8"	50
B8	15	#4	STR	2'-5"	24
D1	30	#6	STR	1'-6"	68
H1	26	#4	3	4'-10"	84
K1	12	#4	STR	3'-5"	27
S1	15	#4	4	7'-5"	74
S2	35	#4	4	8'-0"	187
S3	50	#4	5	3'-2"	106
S4	14	#4	6	6'-6"	61
U1	13	#4	7	4'-11"	43
U2	4	#4	7	4'-5"	12
V1	18	#4	STR	4'-9"	57
V2	18	#4	STR	5'-7"	67
REINFORCING STEEL				LBS.	2732

CLASS A CONCRETE BREAKDOWN :

POUR #1 CAP, CONCRETE COLLARS & LOWER PART OF WINGS	C.Y.	17.6
POUR #2 UPPER PART OF WINGS	C.Y.	1.4
POUR #3 LATERAL GUIDES	C.Y.	0.1
TOTAL CLASS A CONCRETE	C.Y.	19.1

HP 12 X 53 STEEL PILES
NO. 7 LIN. FT. 70

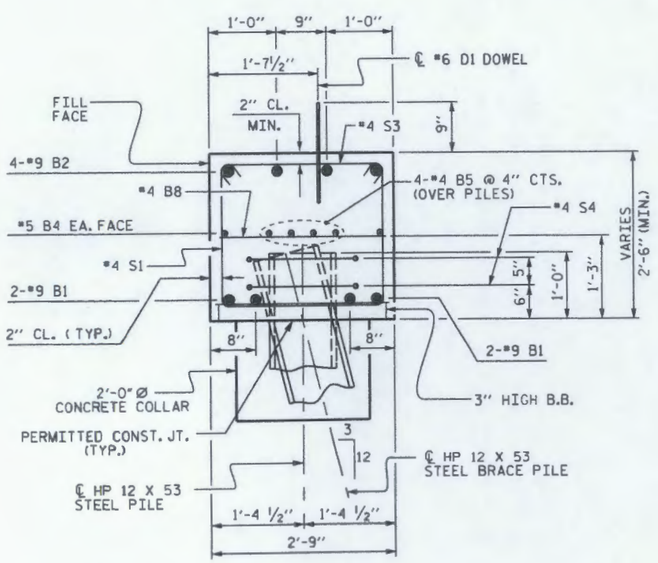

SECTION A-A

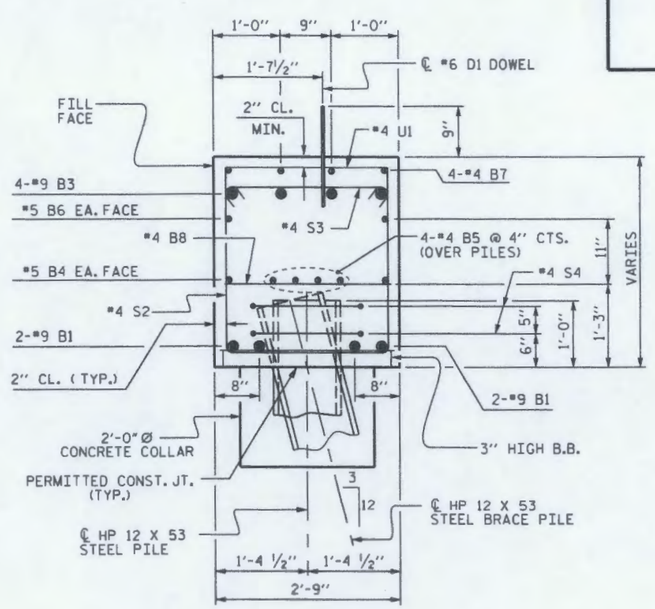

SECTION B-B

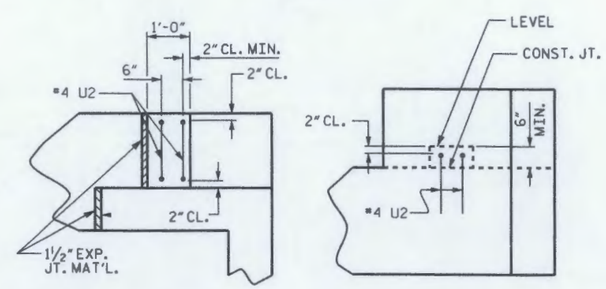

PLAN ELEVATION

LATERAL GUIDE DETAILS

(RIGHT LATERAL GUIDE SHOWN, LEFT LATERAL GUIDE SIMILAR)

PROJECT NO. B-4064
CHATHAM COUNTY
STATION: 10+21.00 -L-

SHEET 3 OF 3

STATE OF NORTH CAROLINA
DEPARTMENT OF TRANSPORTATION
RALEIGH

SUBSTRUCTURE
END BENT 1

NORTH CAROLINA PROFESSIONAL SEAL 14855 ENGINEER DOUGLAS R. CALHOUN
2-5-11

REVISIONS						SHEET NO.
NO.	BY:	DATE:	NO.	BY:	DATE:	13
1			3			TOTAL SHEETS

DRAWN BY : A. K. PATEL DATE : 7/06
CHECKED BY : J. MYA & E.G.A. DATE : 7/12/10

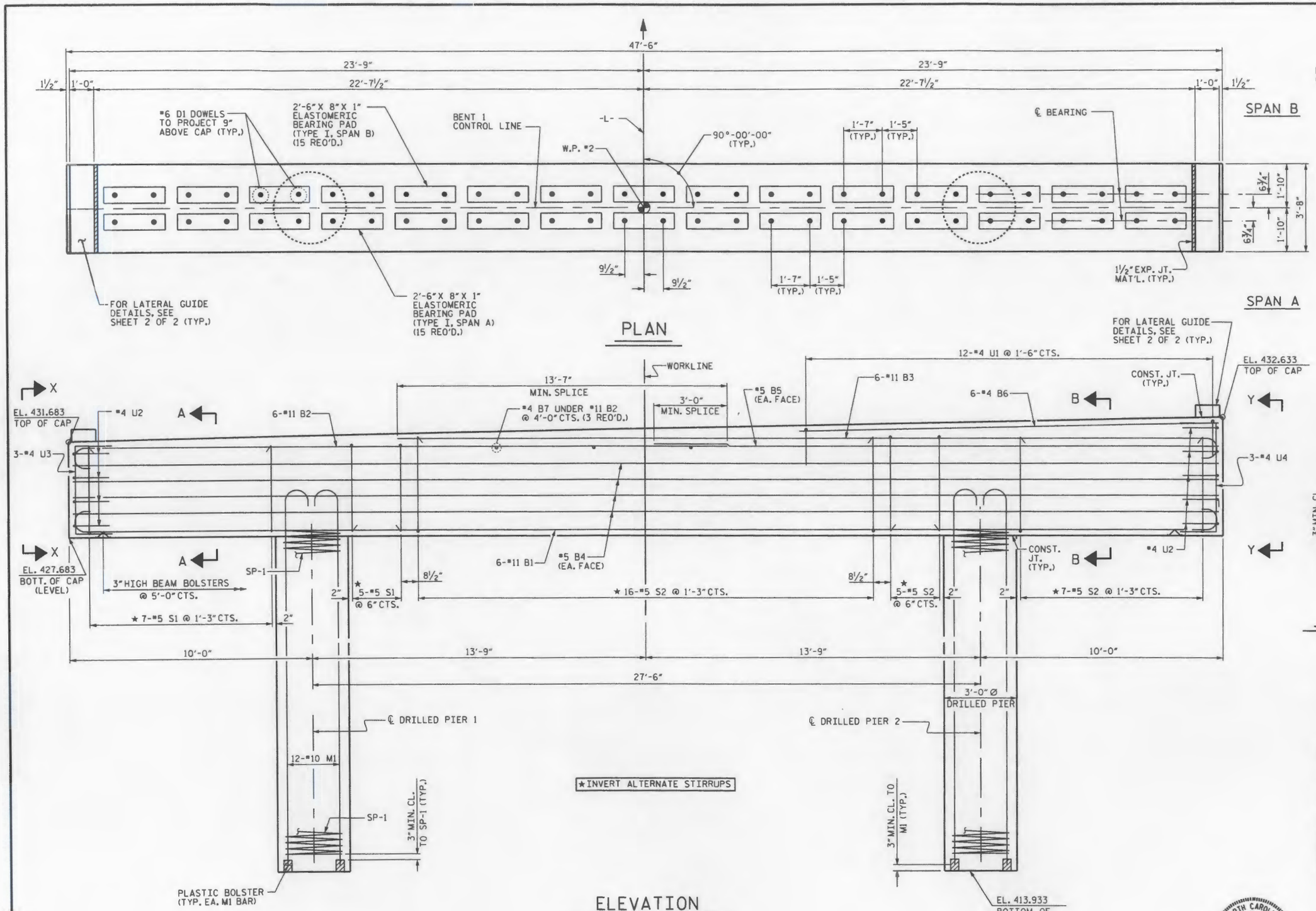

ELEVATION

REINFORCING STEEL, DIMENSIONS AND DETAILS ARE TYPICAL FOR EACH DRILLED PIER

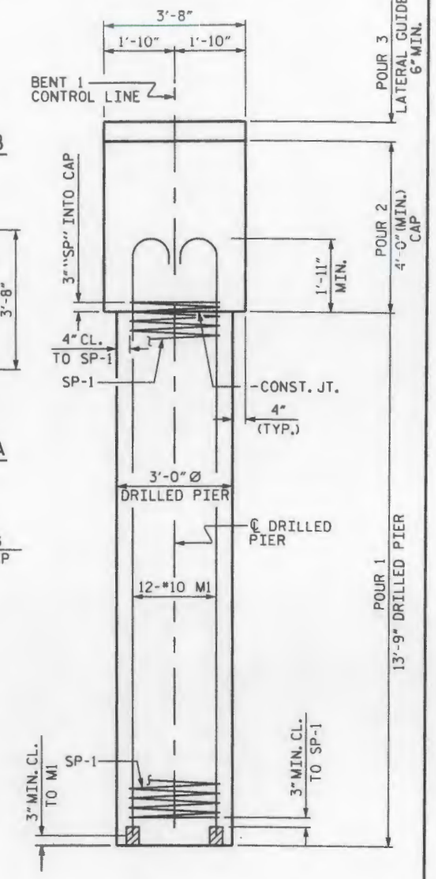

END ELEVATION

REINFORCING STEEL, DIMENSIONS AND DETAILS ARE TYPICAL FOR EACH DRILLED PIER

PROJECT NO. B-4064

CHATHAM COUNTY

STATION: 10+21.00 -L-

SHEET 1 OF 2

STATE OF NORTH CAROLINA
DEPARTMENT OF TRANSPORTATION
RALEIGH

SUBSTRUCTURE

BENT 1

NORTH CAROLINA PROFESSIONAL SEAL 14855 ENGINEER DOUGLAS R. CALHOUN
8-15-11

REVISIONS							SHEET NO.
NO.	BY:	DATE:	NO.	BY:	DATE:		14
1			3				TOTAL SHEETS
2			4				

DRAWN BY : A. K. PATEL DATE : 9/29/06
CHECKED BY : J. MYA & E.G.A. DATE : 7/13/10

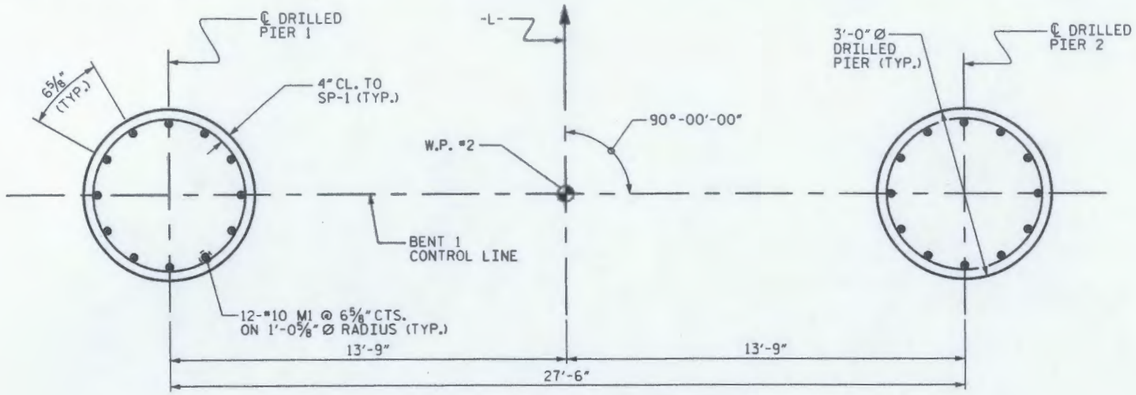

PLAN OF DRILLED PIERS

NOTES

STIRRUPS IN CAP MAY BE SHIFTED AS NECESSARY TO CLEAR DOWELS.

HOOKS ON "M" BARS MAY BE TURNED AS NECESSARY FOR PLACING REINFORCING STEEL.

THE LATERAL GUIDE AT EACH END OF THE CAP IS NOT TO BE POURED UNTIL AFTER THE CORED SLAB UNITS ARE IN PLACE.

ALL STEEL IN THE DRILLED PIERS IS INCLUDED IN THE PAY ITEMS FOR "REINFORCING STEEL" AND "SPIRAL COLUMN REINFORCING STEEL".

THE CONTRACTOR'S ATTENTION IS CALLED TO THE FACT THAT THE LONGITUDINAL REINFORCEMENT FOR THE DRILLED PIERS IS DETAILED WITH 3 FEET OF EXTRA LENGTH.

BAR TYPES

ALL BAR DIMENSIONS ARE OUT TO OUT.

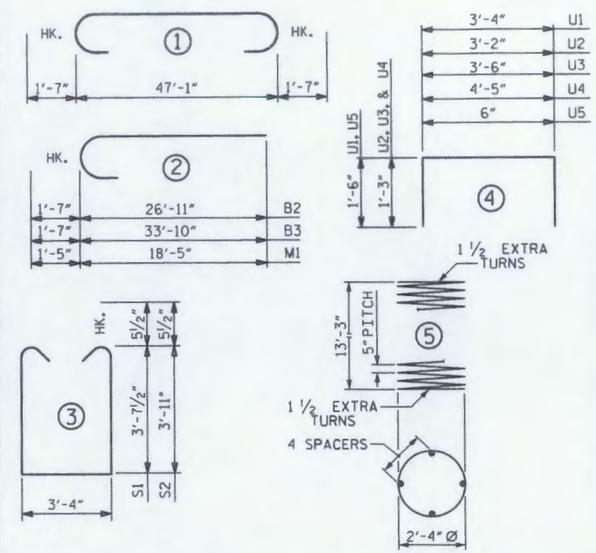

BILL OF MATERIAL

BENT 1

BAR	NO.	SIZE	TYPE	LENGTH	WEIGHT
B1	6	#11	1	50'-3"	1602
B2	6	#11	2	28'-6"	909
B3	6	#11	2	35'-5"	1129
B4	8	#5	STR	47'-2"	394
B5	2	#5	STR	23'-3"	48
B6	6	#4	STR	17'-3"	69
B7	7	#4	STR	3'-4"	16
D1	60	#6	STR	1'-6"	135
M1	24	#10	2	19'-10"	2048
S1	12	#5	3	11'-6"	144
S2	28	#5	3	12'-1"	353
U1	12	#4	4	6'-4"	51
U2	9	#4	4	5'-8"	34
U3	3	#4	4	6'-0"	12
U4	3	#4	4	6'-11"	14
U5	8	#4	4	3'-6"	19

REINFORCING STEEL 6977 LBS.

SPIRAL REINFORCING STEEL

SP-1	2	*	5	251'-4"	524

SPIRAL REINFORCING STEEL 524 LBS.

CLASS A CONCRETE BREAKDOWN

POUR #2 (CAP) 28.9 C.Y.
POUR #3 (LATERAL GUIDE) 0.1 C.Y.

TOTAL CLASS A CONCRETE 29.0 C.Y.

3'-0" Ø DRILLED PIERS

DRILLED PIER CONCRETE POUR #1 (DRILLED PIERS) = 7.2 C.Y.

3'-0" Ø DRILLED PIERS IN SOIL, LIN. FT. = 14.5

3'-0" Ø DRILLED PIERS NOT IN SOIL, LIN. FT. = 13.0

PERMANENT STEEL CASING FOR 3'-0" DIA. DRILLED PIER LIN. FT. = 15.4

** CSL TUBES LIN. FT. = 130.0

* THE SP-1 SPIRAL REINFORCING STEEL SHALL BE W31 OR D-31 COLD DRAWN WIRE OR #5 PLAIN OR DEFORMED BAR.

** NO SEPARATE PAYMENT WILL BE MADE FOR CSL TUBES. CSL TUBES WILL BE INCLUDED IN THE UNIT BID PRICE FOR DRILLED PIERS.

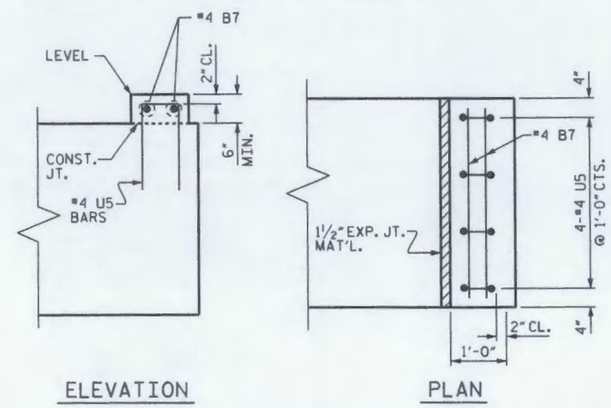

LATERAL GUIDE DETAIL

(RIGHT LATERAL GUIDE SHOWN, LEFT SIDE SIMILAR)

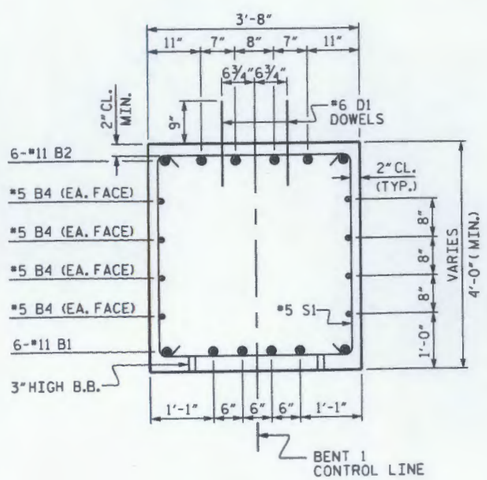

SECTION A-A

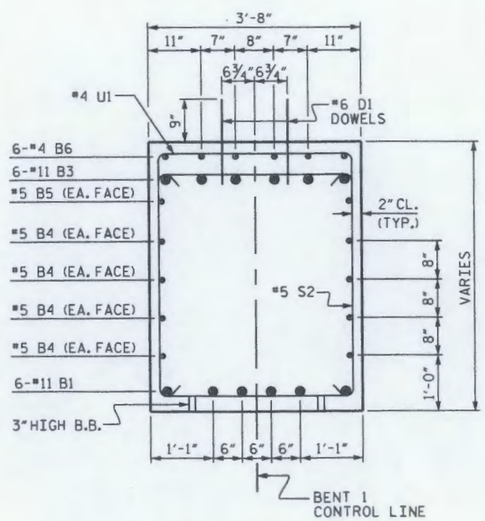

SECTION B-B

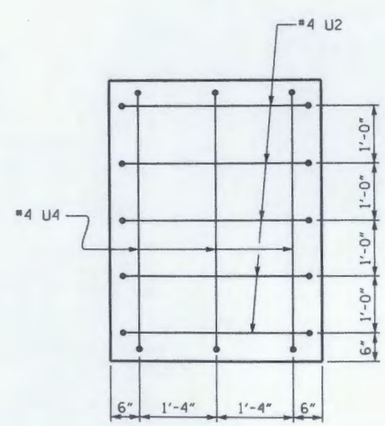

VIEW Y-Y

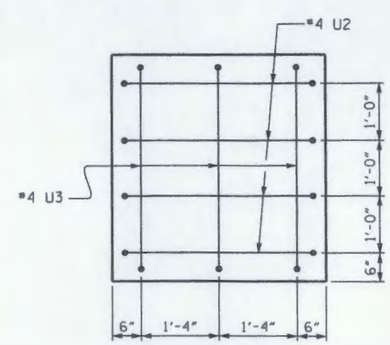

VIEW X-X

NORTH CAROLINA PROFESSIONAL SEAL 14855 ENGINEER DOUGLAS R. CALHOUN
9-15-11

PROJECT NO. B-4064
CHATHAM COUNTY
STATION: 10+21.00 -L-

SHEET 2 OF 2

STATE OF NORTH CAROLINA
DEPARTMENT OF TRANSPORTATION
RALEIGH

SUBSTRUCTURE

BENT 1

REVISIONS								SHEET NO.
NO.	BY:	DATE:	NO.	BY:	DATE:			15
1			3					TOTAL SHEETS
2			4					27

DRAWN BY : A. K. PATEL DATE : 9/29/06
CHECKED BY : J. MYA & E.G.A. DATE : 7/13/10

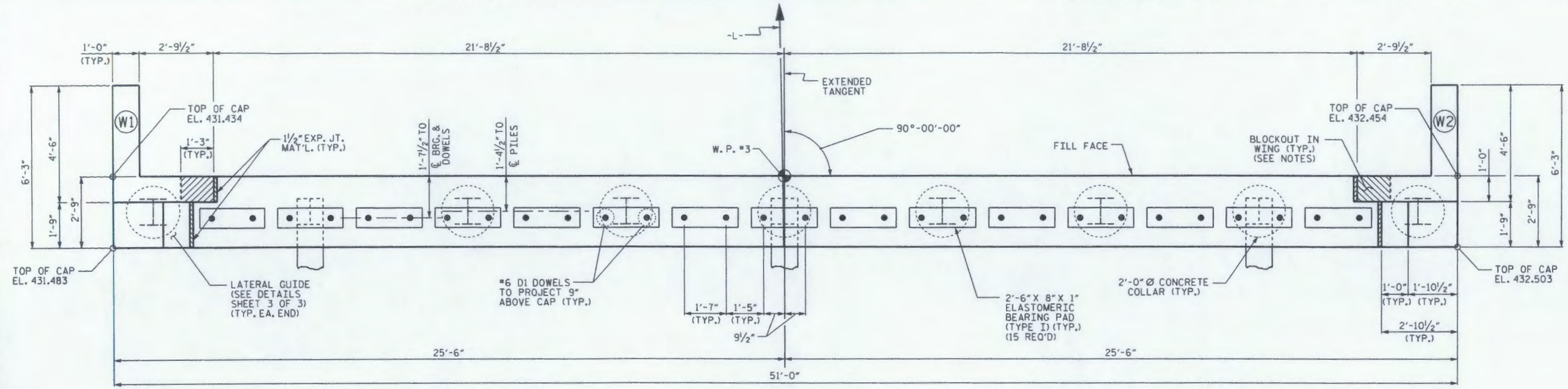

PLAN

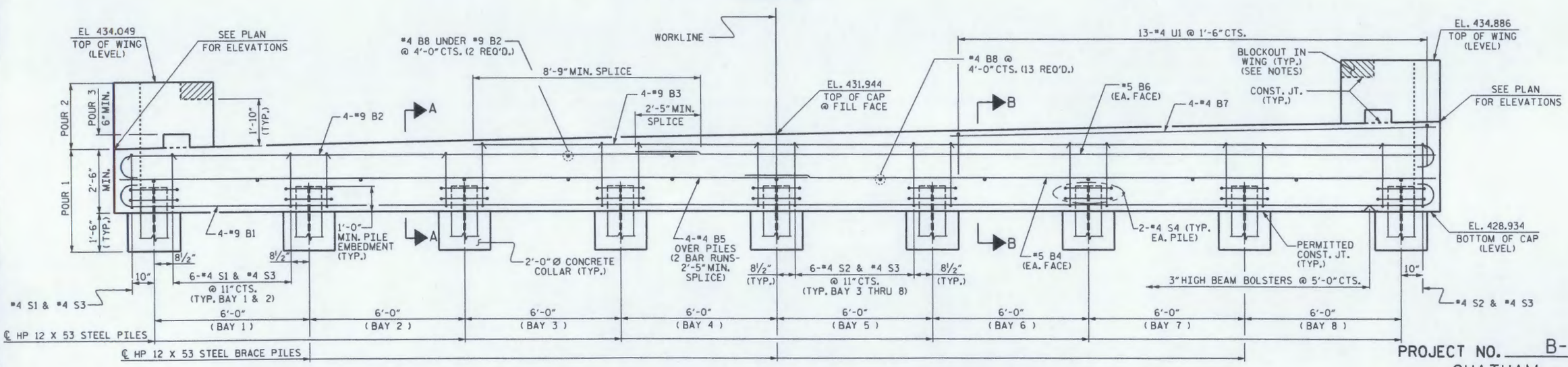

ELEVATION

NOTES:

STIRRUPS IN CAP MAY BE SHIFTED AS NECESSARY TO CLEAR DOWELS.

THE LATERAL GUIDE AT EACH END OF THE CAP IS NOT TO BE POURED UNTIL AFTER THE CORED SLAB UNITS ARE IN PLACE.

THE CONTRACTOR SHALL PROVIDE FOR INSTALLATION OF THE 4" DIAMETER DRAIN PIPE THROUGH THE WING WALL AS REQUIRED FOR REINFORCED BRIDGE APPROACH FILLS. SEE THE ROADWAY PLANS. REINFORCING STEEL IN THE WING WALL MAY BE SHIFTED AS NECESSARY TO CLEAR THE DRAIN PIPE.

THE CONCRETE IN THE SHADED AREA OF THE WING SHALL BE POURED AFTER THE JOINT BETWEEN THE DECK AND THE APPROACH SLAB HAS BEEN SAWED AND THE PARAPET AND END POST ARE CAST IF SLIP FORMING IS USED.

NORTH CAROLINA PROFESSIONAL SEAL 14855 ENGINEER DOUGLAS R. CALHOUN
9-15-11

PROJECT NO. B-4064
CHATHAM COUNTY
STATION: 10+21.00 -L-

SHEET 1 OF 3

STATE OF NORTH CAROLINA
DEPARTMENT OF TRANSPORTATION
RALEIGH

SUBSTRUCTURE
END BENT 2

REVISIONS						SHEET NO.
NO.	BY:	DATE:	NO.	BY:	DATE:	16
1			3			TOTAL SHEETS
2			4			77

DRAWN BY : A. K. PATEL DATE : 7/06
CHECKED BY : J. MYA DATE : 7/06

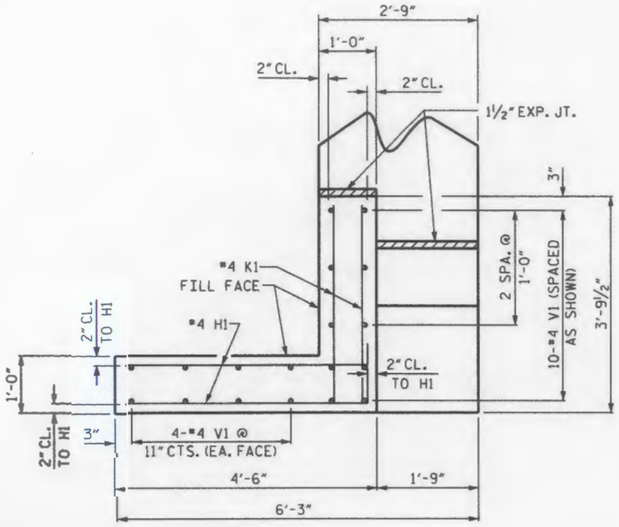

PLAN OF WING - (W1)

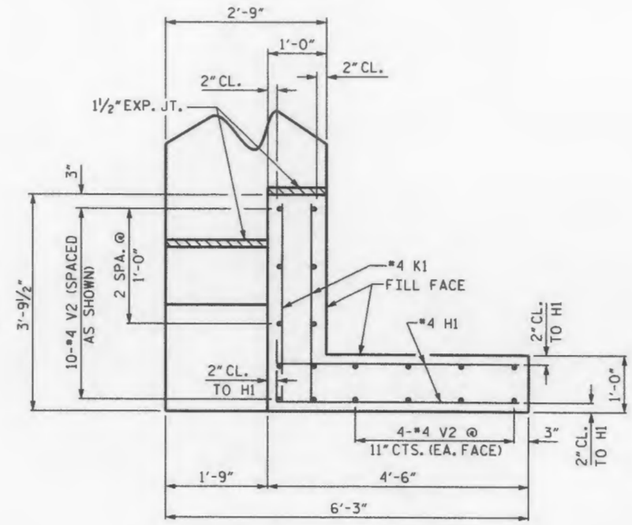

PLAN OF WING - (W2)

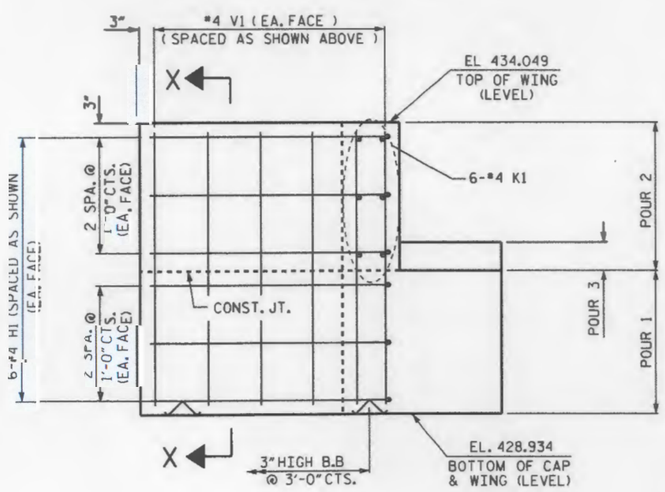

ELEVATION OF WING - (W1)

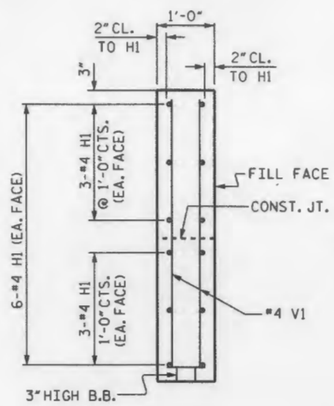

SECTION X-X

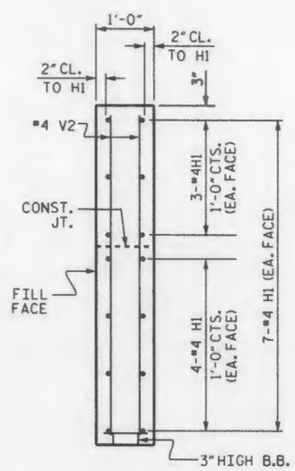

SECTION Y-Y

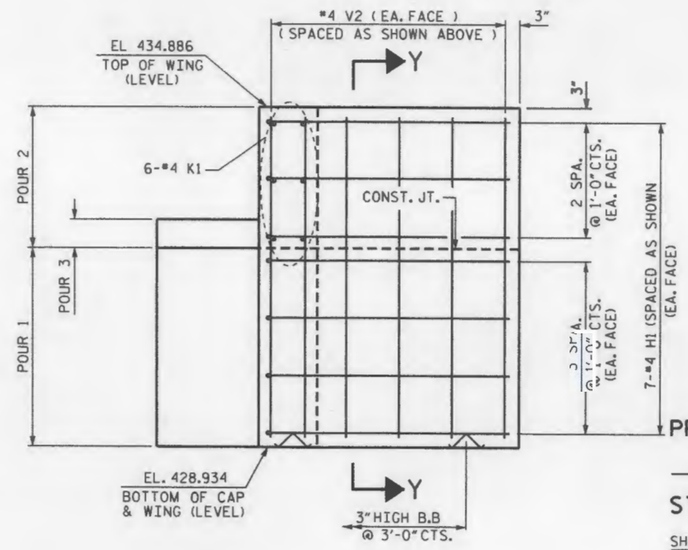

ELEVATION OF WING - (W2)

PROJECT NO. B-4064

CHATHAM COUNTY

STATION: 10+21.00 -L-

SHEET 2 OF 3

STATE OF NORTH CAROLINA
DEPARTMENT OF TRANSPORTATION
RALEIGH

SUBSTRUCTURE
END BENT 2

NORTH CAROLINA PROFESSIONAL SEAL 14855 ENGINEER DOUGLAS R. CALHOUN
01-15-11

REVISIONS							SHEET NO.
NO.	BY:	DATE:	NO.	BY:	DATE:		17
1			3				TOTAL SHEETS
2			4				37

DRAWN BY : A.C. PATEL DATE : 7/06
CHECKED BY : J. MYA & E.G.A. DATE : 7/12/10

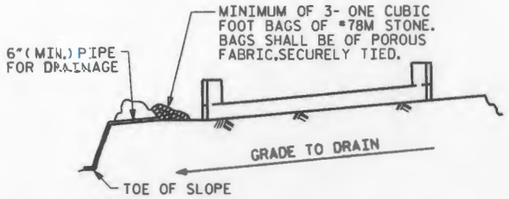

BAGGED STONE AND PIPE SHALL BE PLACED IMMEDIATELY AFTER COMPLETION OF END BENT EXCAVATION. PIPE MAY BE EITHER CONCRETE, CORRUGATED STEEL, CORRUGATED ALUMINUM ALLOY, OR CORRUGATED PLASTIC. PERFORATED PIPE WILL NOT BE ALLOWED.

BAGGED STONE SHALL REMAIN IN PLACE UNTIL THE ENGINEER DIRECTS THAT IT BE REMOVED. THE CONTRACTOR SHALL REMOVE AND DISPOSE OF SILT ACCUMULATIONS AT BAGGED STONE WHEN SO DIRECTED BY THE ENGINEER. BAGS SHALL BE REMOVED AND REPLACED WHENEVER THE ENGINEER DETERMINES THAT THEY HAVE DETERIORATED AND LOST THEIR EFFECTIVENESS.

NO SEPARATE PAYMENT WILL BE MADE FOR THIS WORK AND THE ENTIRE COST OF THIS WORK SHALL BE INCLUDED IN THE UNIT CONTRACT PRICE BID FOR THE SEVERAL PAY ITEMS.

TEMPORARY DRAINAGE AT END BENT

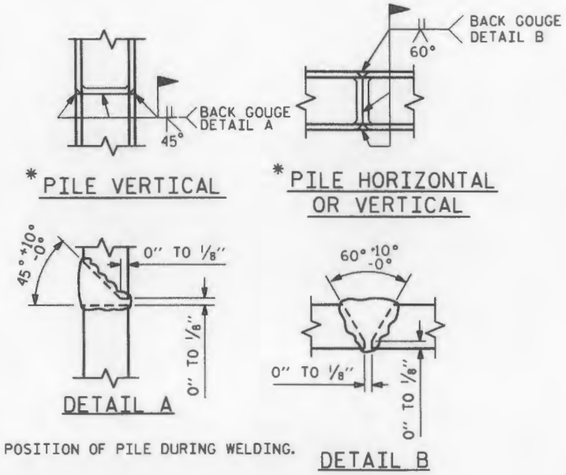

* POSITION OF PILE DURING WELDING.

PILE SPLICE DETAILS

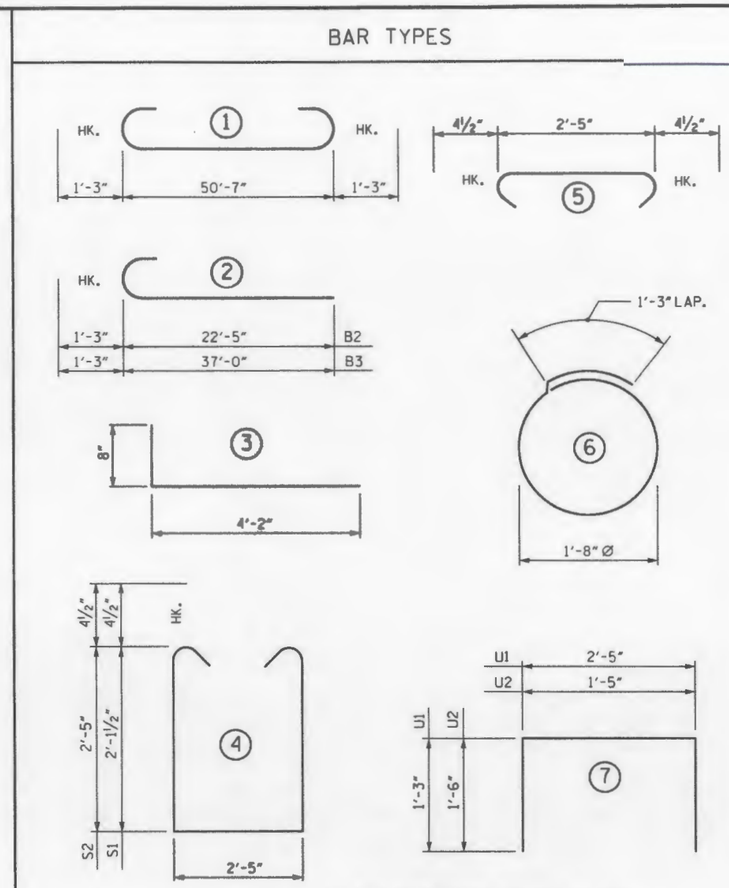

ALL BAR DIMENSIONS ARE OUT TO OUT.

BILL OF MATERIAL
END BENT 2

BAR	NO.	SIZE	TYPE	LENGTH	WEIGHT
B1	4	#9	1	53'-1"	722
B2	4	#9	2	23'-8"	322
B3	4	#9	2	38'-3"	520
B4	2	#5	STR	50'-8"	106
B5	8	#4	STR	26'-7"	142
B6	2	#5	STR	30'-9"	64
B7	4	#4	STR	18'-8"	50
B8	15	#4	STR	2'-5"	24
D1	30	#6	STR	1'-6"	68
H1	26	#4	3	4'-10"	84
K1	12	#4	STR	3'-5"	27
S1	13	#4	4	7'-5"	64
S2	37	#4	4	8'-0"	198
S3	50	#4	5	3'-2"	106
S4	18	#4	6	6'-6"	78
U1	13	#4	7	4'-11"	43
U2	4	#4	7	4'-5"	12
V1	18	#4	STR	4'-9"	57
V2	18	#4	STR	5'-7"	67
REINFORCING STEEL				LBS.	2754

CLASS A CONCRETE BREAKDOWN

POUR #1 CAP, CONCRETE COLLARS & LOWER PART OF WINGS	C.Y.	18.2
POUR #2 WINGS	C.Y.	1.4
POUR #3 LATERAL GUIDES	C.Y.	0.1
TOTAL CLASS A CONCRETE	C.Y.	19.7

HP 12 X 53 STEEL PILES
NO. 9 LIN. FT. 90

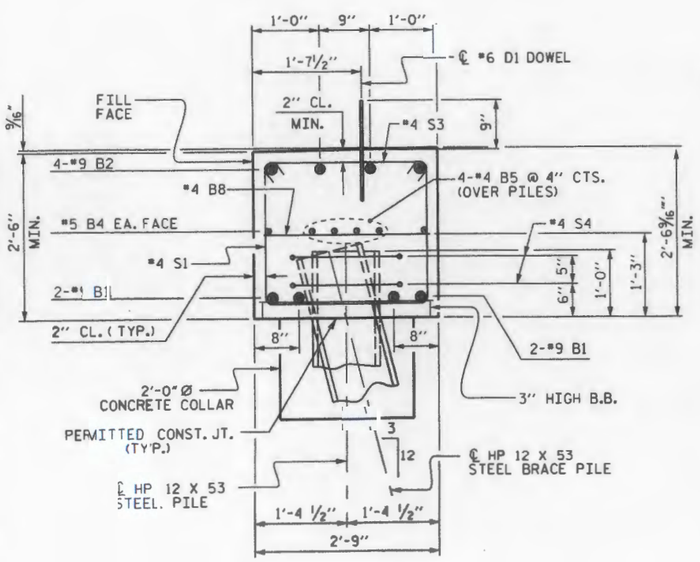

SECTION A-A

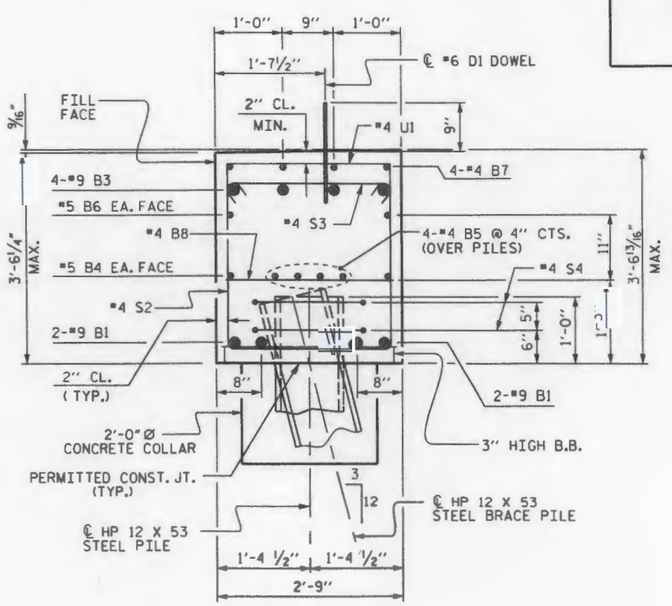

SECTION B-B

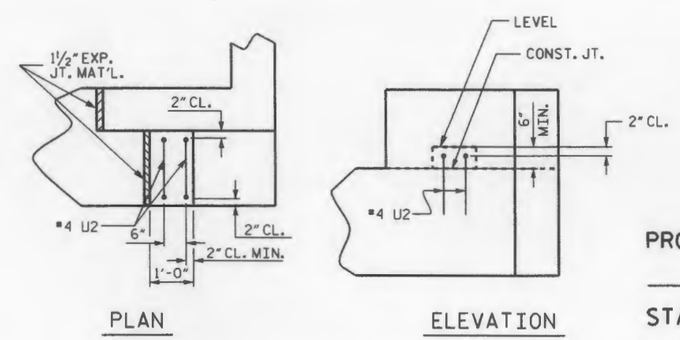

PLAN ELEVATION

LATERAL GUIDE DETAILS

(RIGHT LATERAL GUIDE SHOWN, LEFT LATERAL GUIDE SIMILAR)

PROJECT NO. B-4064
CHATHAM COUNTY
STATION: 10+21.00 -L-

SHEET 3 OF 3

STATE OF NORTH CAROLINA
DEPARTMENT OF TRANSPORTATION
RALEIGH

SUBSTRUCTURE
END BENT 2

NORTH CAROLINA PROFESSIONAL SEAL 14855 ENGINEER DOUGLAS R. CALHOUN

REVISIONS						SHEET NO.
NO.	BY:	DATE:	NO.	BY:	DATE:	18
1			3			TOTAL SHEETS
2			4			27

DRAWN BY: A. K. PATEL DATE: 7/06

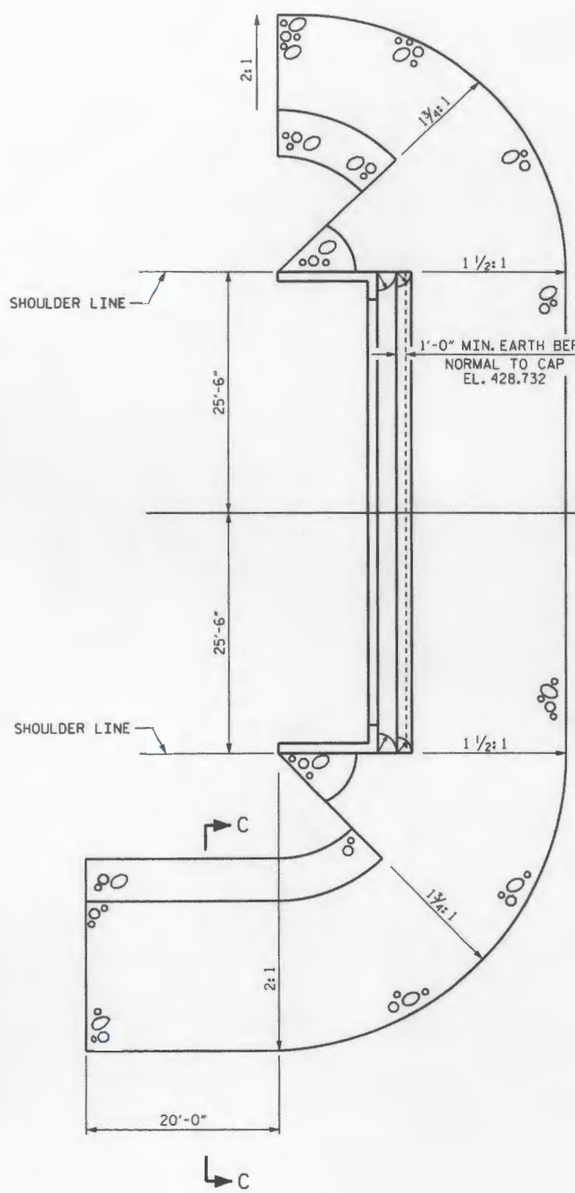

END BENT 1

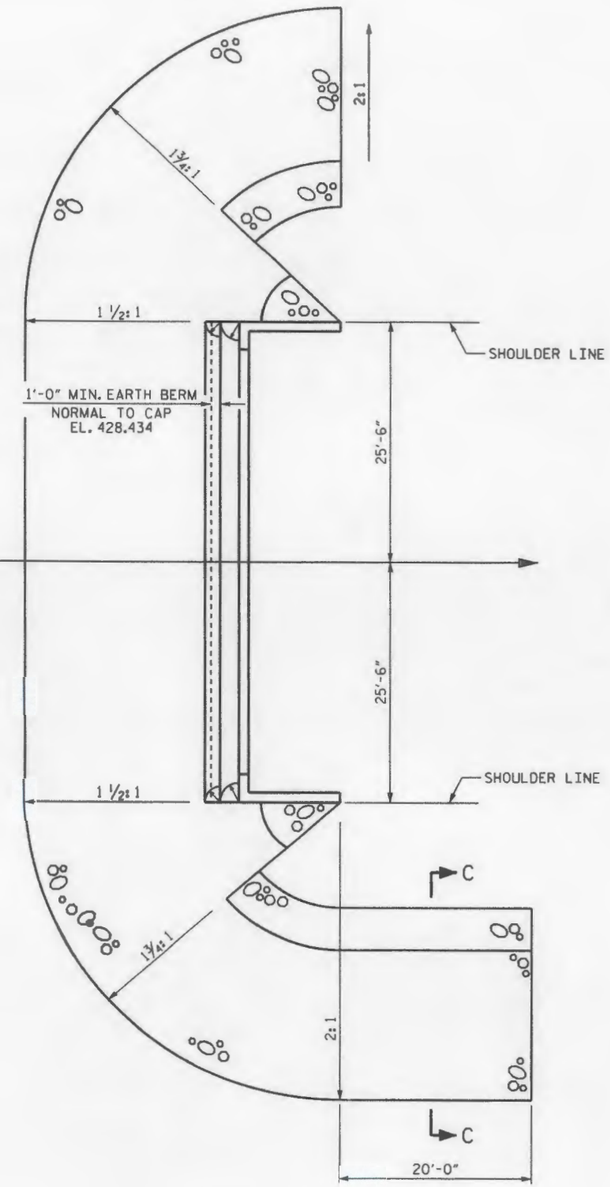

END BENT 2

PLAN

ESTIMATED QUANTITIES		
BRIDGE @ STA. 10+21.00 -L-	RIP RAP CLASS II (2'-0" THICK)	FILTER FABRIC FOR DRAINAGE
	TONS	SQUARE YARDS
END BENT 1	91	101
END BENT 2	103	114

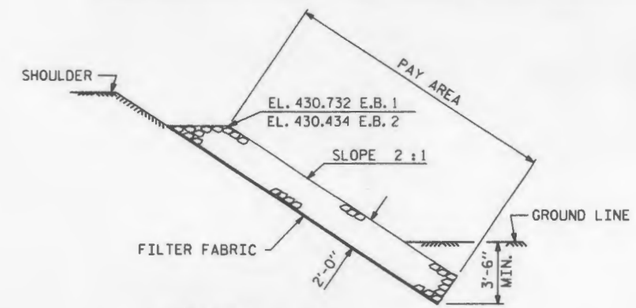

SECTION C-C

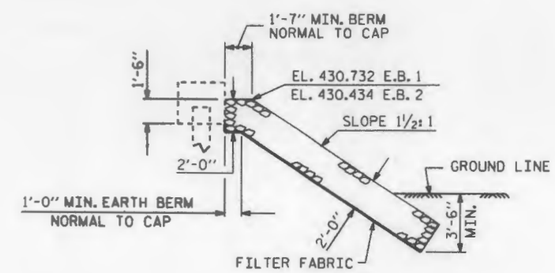

℄ SECTION
BERM RIP RAPPED

PROJECT NO. B-4064
CHATHAM COUNTY
STATION: 10+21.00 -L-

NORTH CAROLINA PROFESSIONAL SEAL 14855 ENGINEER DOUGLAS R. CALHOUN
9-15-11

STATE OF NORTH CAROLINA
DEPARTMENT OF TRANSPORTATION
RALEIGH

STANDARD
RIP RAP DETAILS

ASSEMBLED BY : A. K. PATEL	DATE : 1/17/07
CHECKED BY : J. MYA / E.G.A.	DATE : 7/13/10
DRAWN BY : FCJ 2/88	REV. 7/17/98 REK/RWW REV. 8/16/99 RWW/LES

REVISIONS								SHEET NO.
NO.	BY:	DATE:		NO.	BY:	DATE:		19
1				3				TOTAL SHEETS

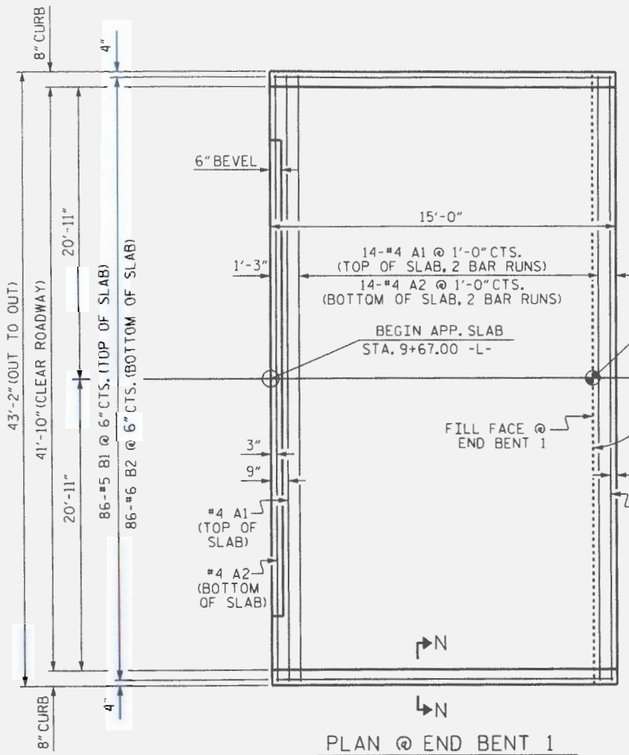

PLAN @ END BENT 1

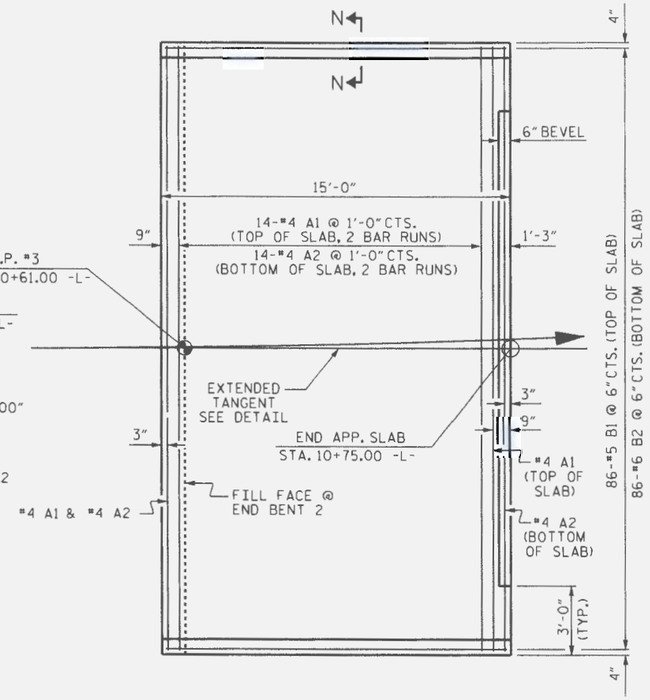

PLAN @ END BENT 2

DIMENSIONS SHOWN ARE TYPICAL FOR BOTH APPROACH SLABS

NOTES

FOR REINFORCED BRIDGE APPROACH FILL INCLUDING FABRIC, IMPERMEABLE GEOMEMBRANE, 4" Ø DRAINAGE PIPE, #78M STONE, AND SELECT MATERIAL, SEE ROADWAY PLANS.

AREA BETWEEN THE WINGWALL AND APPROACH SLAB SHALL BE GRADED TO DRAIN THE WATER AWAY FROM THE FILL FACE OF THE BRIDGE AND SHALL BE PAVED. SEE ROADWAY PLANS.

THE 6" COMP. A.B.C. SHALL BE FLUSH WITH THE ROADWAY END OF THE APPROACH SLAB AND SHALL EXTEND 1'-0" OUTSIDE OF EACH EDGE OF THE APPROACH SLAB.

THE CONTRACTOR MAY USE 4" TYPE B-25.0B ASPHALT CONCRETE BASE COURSE IN LIEU OF 6" COMP. A.B.C. IF THIS OPTION IS USED, THE BASE COURSE SHALL BE FLUSH WITH THE ROADWAY END OF THE APPROACH SLAB, AND THE WIDTH SHALL BE THE SAME AS THAT OF THE APPROACH SLAB.

THE CONTRACTOR MAY USE 5" CLASS "A" CONCRETE BASE IN LIEU OF 6" COMP. A.B.C. IF THIS OPTION IS USED, THE CONCRETE BASE SHALL BE FLUSH WITH THE ROADWAY END OF THE APPROACH SLAB, AND THE WIDTH SHALL BE THE SAME AS THAT OF THE APPROACH SLAB. THE CONCRETE SHALL BE FINISHED TO A SMOOTH SURFACE AND A LAYER OF 30 LB ROOFING FELT SHALL BE PLACED BETWEEN THE CONCRETE BASE AND THE APPROACH SLAB TO PREVENT BOND. THE APPROACH SLAB SHALL NOT BE CAST UNTIL THE CONCRETE BASE HAS REACHED AN AGE OF THREE CURING DAYS.

FOR JOINT DETAILS, SEE "PRESTRESSED CONCRETE CORED SLAB UNIT" SHEETS.

THE JOINT AT THE END BENT SHALL BE GROUTED AS SOON AS PRACTICAL AFTER THE CONSTRUCTION OF THE APPROACH SLABS.

APPROACH SLAB GROOVING IS NOT REQUIRED.

BILL OF MATERIAL
FOR ONE APPROACH SLAB (2 REQ'D)

BAR	NO.	SIZE	TYPE	LENGTH	WEIGHT
* A1	32	#4	STR	22'-5"	479
A2	32	#4	STR	22'-4"	477
* B1	86	#5	STR	14'-3"	1278
B2	86	#6	STR	14'-8"	1895

REINFORCING STEEL	LBS.	2372
* EPOXY COATED REINFORCING STEEL	LBS.	1757
CLASS AA CONCRETE : SLAB AND CURB	C. Y.	26.4

SPLICE CHART

#4 A1	2'-0"
#4 A2	1'-9"

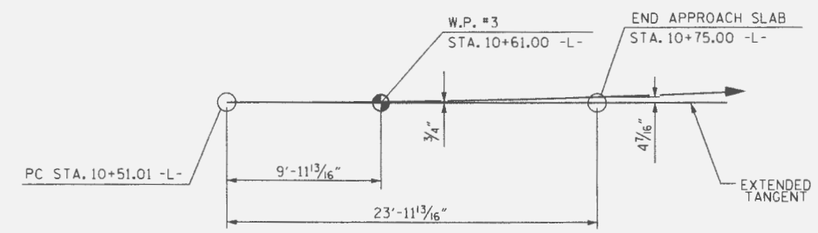

EXTENDED TANGENT DETAIL

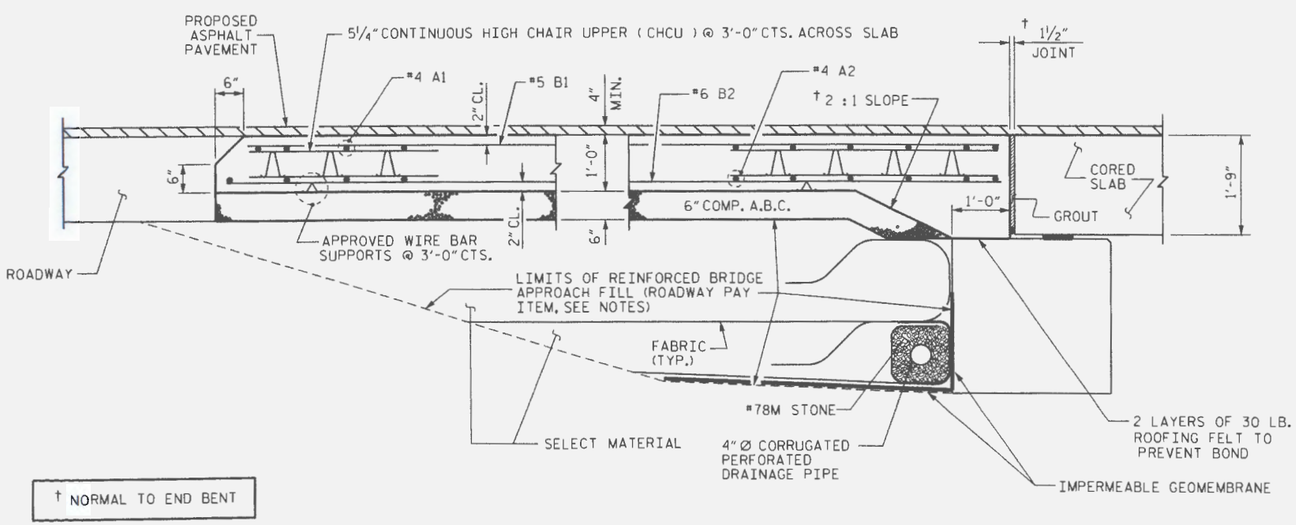

† NORMAL TO END BENT

SECTION THRU SLAB

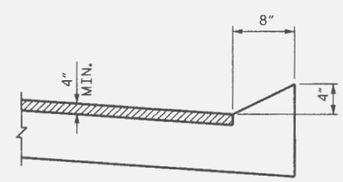

SECTION N-N

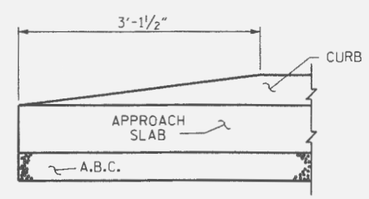

END OF CURB WITHOUT SHOULDER BERM GUTTER
(OMIT TAPER WHEN SHOULDER BERM GUTTER IS REQUIRED)

CURB DETAILS

NORTH CAROLINA PROFESSIONAL SEAL 14855 ENGINEER DOUGLAS R. CALHOUN
9-15-11

PROJECT NO. B-4064
CHATHAM COUNTY
STATION: 10+21.00 -L-

SHEET 1 OF 2

STATE OF NORTH CAROLINA
DEPARTMENT OF TRANSPORTATION
RALEIGH

STANDARD

BRIDGE APPROACH SLAB FOR PRESTRESSED CONCRETE CORED SLAB

REVISIONS						SHEET NO.
NO.	BY:	DATE:	NO.	BY:	DATE:	20
1			3			TOTAL SHEETS
2			4			27

ASSEMBLED BY : A. K. PATEL		DATE : 1/16/07	
CHECKED BY : J. MYA & E.G.A.		DATE : 7/13/10	
DRAWN BY : FCJ 6/87	REV. 7/10/01		LES/RDR
CHECKED BY : FCA 6/87	REV. 5/7/03R		RWW/JTE

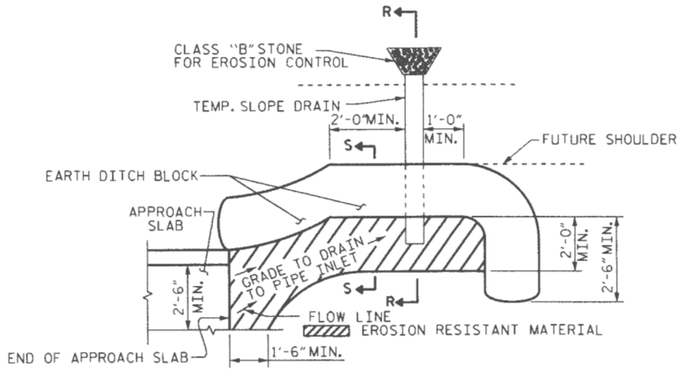

NOTE: IMMEDIATELY AFTER THE CONSTRUCTION OF THE APPROACH SLAB, THE CONTRACTOR SHALL PROVIDE TEMPORARY BERM AND SLOPE DRAIN. CONTRACTOR SHALL GRADE TO PIPE INLET AND PROVIDE EROSION RESISTANT MATERIAL AS SHOWN. THE EROSION RESISTANT MATERIAL SHALL BE EITHER 1) ASPHALT PLANT MIX, TYPE 1 OR TYPE 2, MIN. 2" DEPTH, 2) EROSION CONTROL MAT, OR 3) CONCRETE, AS DIRECTED BY THE ENGINEER. THE SLOPE DRAIN SHALL CONSIST OF A NON-PERFORATED TEMPORARY DRAINAGE PIPE, 12 INCHES IN DIAMETER.

PLAN VIEW

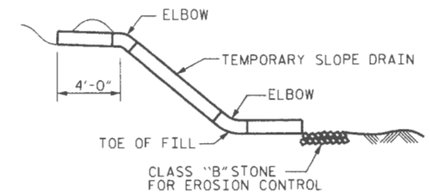

SECTION R-R

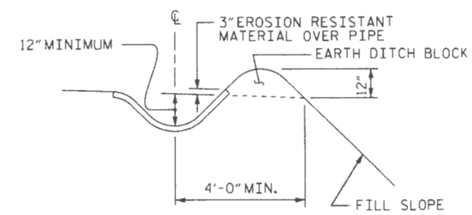

SECTION S-S

TEMPORARY BERM AND SLOPE DRAIN DETAILS

(TO BE USED WHEN SHOULDER BERM GUTTER IS REQUIRED)

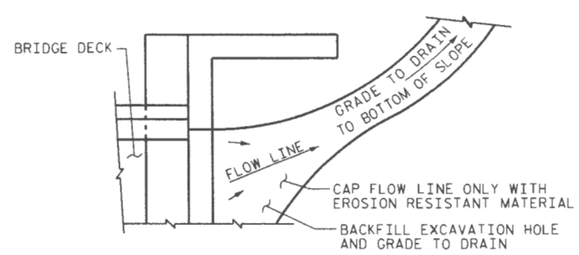

NOTE: IF THE APPROACH SLAB IS NOT CONSTRUCTED IMMEDIATELY AFTER THE BACKFILLING OF THE END BENT EXCAVATION, GRADE TO DRAIN TO THE BOTTOM OF THE SLOPE AND PROVIDE EROSION RESISTANT MATERIAL, SUCH AS FIBERGLASS ROVING OR AS DIRECTED BY THE ENGINEER TO PREVENT SOIL EROSION AND TO PROTECT THE AREA ADJACENT TO THE STRUCTURE. THE CONTRACTOR WILL BE REQUIRED TO REMOVE THESE MATERIALS PRIOR TO CONSTRUCTION OF THE APPROACH SLAB.

TEMPORARY DRAINAGE DETAIL

PROJECT NO. B-4064
CHATHAM COUNTY
STATION: 10+21.00 -L-

SHEET 2 OF 2

STATE OF NORTH CAROLINA
DEPARTMENT OF TRANSPORTATION
RALEIGH

STANDARD

BRIDGE APPROACH SLAB DETAILS

1988

NORTH CAROLINA PROFESSIONAL SEAL 14855 ENGINEER DOUGLAS R. CALHOUN
9-15-11

REVISIONS						SHEET NO.
NO.	BY:	DATE:	NO.	BY:	DATE:	21
1			3			TOTAL SHEETS
2			4			27

ASSEMBLED BY : A. K PATEL		DATE : 01/16/07	
CHECKED BY : J. IYA		DATE : 02/07	
DRAWN BY : FCJ	1/88	REV. 10/17/00	RWW/LES
CHECKED BY : ARB	1/88	REV. 5/7/03	RWW/JTE
		REV. 5/1/06	TLA/GM

STANDARD NOTES

DESIGN DATA:

SPECIFICATIONS	A.A.S.H.T.O. (CURRENT)
LIVE LOAD	SEE PLANS
IMPACT ALLOWANCE	SEE A.A.S.H.T.O.
STRESS IN EXTREME FIBER OF	
STRUCTURAL STEEL - AASHTO M270 GRADE 36	20,000 LBS. PER SQ. IN.
- AASHTO M270 GRADE 50W	27,000 LBS. PER SQ. IN.
- AASHTO M270 GRADE 50	27,000 LBS. PER SQ. IN.
REINFORCING STEEL IN TENSION GRADE 60	24,000 LBS. PER SQ. IN.
CONCRETE IN COMPRESSION	1,200 LBS. PER SQ. IN.
CONCRETE IN SHEAR	SEE A.A.S.H.T.O.
STRUCTURAL TIMBER - TREATED OR UNTREATED - EXTREME FIBER STRESS	1,800 LBS. PER SQ. IN.
COMPRESSION PERPENDICULAR TO GRAIN OF TIMBER	375 LBS. PER SQ. IN.
EQUIVALENT FLUID PRESSURE OF EARTH	30 LBS. PER CU. FT. (MINIMUM)

MATERIAL AND WORKMANSHIP:

EXCEPT AS MAY OTHERWISE BE SPECIFIED ON PLANS OR IN THE SPECIAL PROVISIONS, ALL MATERIAL AND WORKMANSHIP SHALL BE IN ACCORDANCE WITH THE 2006 "STANDARD SPECIFICATIONS FOR ROADS AND STRUCTURES" OF THE N. C. DEPARTMENT OF TRANSPORTATION.

STEEL SHEET PILING FOR PERMANENT OR TEMPORARY APPLICATIONS SHALL BE HOT ROLLED.

CONCRETE:

UNLESS OTHERWISE REQUIRED ON PLANS, CLASS A CONCRETE SHALL BE USED FOR ALL PORTIONS OF ALL STRUCTURES WITH THE EXCEPTION THAT: CLASS AA CONCRETE SHALL BE USED IN BRIDGE SUPERSTRUCTURES, ABUTMENT BACKWALLS, AND APPROACH SLABS; AND CLASS B CONCRETE SHALL BE USED FOR SLOPE PROTECTION AND RIP RAP.

CONCRETE CHAMFERS:

UNLESS OTHERWISE NOTED ON THE PLANS, ALL EXPOSED CORNERS ON STRUCTURES SHALL BE CHAMFERED 3/4" WITH THE FOLLOWING EXCEPTIONS: TOP CORNERS OF CURBS MAY BE ROUNDED TO 1-1/2" RADIUS WHICH IS BUILT INTO CURB FORMS; CORNERS OF TRANSVERSE FLOOR EXPANSION JOINTS SHALL BE ROUNDED WITH A 1/4" FINISHING TOOL UNLESS OTHERWISE REQUIRED ON PLANS; AND CORNERS OF EXPANSION JOINTS IN THE ROADWAY FACES AND TOPS OF CURBS AND SIDEWALKS SHALL BE ROUNDED TO A 1/4" RADIUS WITH A FINISHING STONE OR TOOL UNLESS OTHERWISE REQUIRED ON PLANS.

DOWELS:

DOWELS WHEN INDICATED ON PLANS AS FOR CULVERT EXTENSIONS, SHALL BE EMBEDDED AT LEAST 12" INTO THE OLD CONCRETE AND GROUTED INTO PLACE WITH 1:2 CEMENT MORTAR.

ALLOWANCE FOR DEAD LOAD DEFLECTION, SETTLEMENT, ETC. IN CASTING SUPERSTRUCTURES:

BRIDGES SHALL BE BUILT ON THE GRADE OR VERTICAL CURVE SHOWN ON PLANS. SLABS, CURBS AND PARAPETS SHALL CONFORM TO THE GRADE OR CURVE.

ALL DIMENSIONS WHICH ARE GIVEN IN SECTION AND ARE AFFECTED BY DEAD LOAD DEFLECTIONS ARE DIMENSIONS AT CENTER LINE OF BEARING UNLESS OTHERWISE NOTED ON PLANS. IN SETTING FORMS FOR STEEL BEAM BRIDGES AND PRESTRESSED CONCRETE GIRDER BRIDGES, ADJUSTMENTS SHALL BE MADE DUE TO THE DEAD LOAD DEFLECTIONS FOR THE ELEVATIONS SHOWN. WHERE BLOCKS ARE SHOWN OVER BEAMS FOR BUILDING UP TO THE SLAB, THE VERTICAL DIMENSIONS OF THE BLOCKS SHALL BE ADJUSTED BETWEEN BEARINGS TO COMPENSATE FOR DEAD LOAD DEFLECTIONS, VERTICAL CURVE ORDINATE, AND ACTUAL BEAM CAMBER. WHERE BOTTOM OF SLAB IS IN LINE WITH BOTTOM OF TOP FLANGES, DEPTH OF SLAB BETWEEN BEARINGS SHALL BE ADJUSTED TO COMPENSATE FOR DEAD LOAD DEFLECTION, VERTICAL CURVE ORDINATE, AND ACTUAL BEAM CAMBER.

IN SETTING FALSEWORK AND FORMS FOR REINFORCED CONCRETE SPANS, AN ALLOWANCE SHALL BE MADE FOR DEAD LOAD DEFLECTIONS, SETTLEMENT OF FALSEWORK, AND PERMANENT CAMBER WHICH SHALL BE PROVIDED FOR IN ADDITION TO THE ELEVATIONS SHOWN. AFTER REMOVAL OF THE FALSEWORK, THE FINISHED STRUCTURES SHALL CONFORM TO THE PROFILE AND ELEVATIONS SHOWN ON THE PLANS AND CONSTRUCTION ELEVATIONS FURNISHED BY THE ENGINEER.

DETAILED DRAWINGS FOR FALSEWORK OR FORMS FOR BRIDGE SUPERSTRUCTURE AND ANY STRUCTURE OR PARTS OF A STRUCTURE AS NOTED ON THE PLANS SHALL BE SUBMITTED TO THE ENGINEER FOR APPROVAL BEFORE CONSTRUCTION OF THE FALSEWORK OR FORMS IS STARTED.

REINFORCING STEEL:

ALL REINFORCING STEEL SHALL BE DEFORMED. DIMENSIONS RELATIVE TO PLACEMENT OF REINFORCING ARE TO CENTERS OF BARS UNLESS OTHERWISE INDICATED IN THE PLANS. DIMENSIONS ON BAR DETAILS ARE TO CENTERS OF BARS OR ARE OUT TO OUT AS INDICATED ON PLANS.

WIRE BAR SUPPORTS SHALL BE PROVIDED FOR REINFORCING STEEL WHERE INDICATED ON THE PLANS. WHEN BAR SUPPORT PIECES ARE PLACED IN CONTINUOUS LINES, THEY SHALL BE SO PLACED THAT THE ENDS OF THE SUPPORTING WIRES SHALL BE LAPPED TO LOCK LEGS ON ADJOINING PIECES.

STRUCTURAL STEEL:

AT THE CONTRACTOR'S OPTION, HE MAY SUBSTITUTE 7/8" Ø SHEAR STUDS FOR THE 3/4" Ø STUDS SPECIFIED ON THE PLANS. THIS SUBSTITUTION SHALL BE MADE AT THE RATE OF 3 - 7/8" Ø STUDS FOR 4 - 3/4" Ø STUDS, AND STUD SPACING CHANGES SHALL BE MADE AS NECESSARY TO PROVIDE THE SAME EQUIVALENT NUMBER OF 7/8" Ø STUDS ALONG THE BEAM AS SHOWN FOR 3/4" Ø STUDS BASED ON THE RATIO OF 3 - 7/8" Ø STUDS FOR 4 - 3/4" Ø STUDS. STUDS OF THE LENGTH SPECIFIED ON THE PLANS MUST BE PROVIDED. THE MAXIMUM SPACING SHALL BE 2'-0".

EXCEPT AT THE INTERIOR SUPPORTS OF CONTINUOUS BEAMS WHERE THE COVER PLATE IS IN CONTACT WITH BEARING PLATE, THE CONTRACTOR MAY, AT HIS OPTION, SUBSTITUTE FOR THE COVER PLATES DESIGNATED ON THE PLANS COVER PLATES OF THE EQUIVALENT AREA PROVIDED THESE PLATES ARE AT LEAST 5/16" IN THICKNESS AND DO NOT EXCEED A WIDTH EQUAL TO THE FLANGE WIDTH LESS 2" OR A THICKNESS EQUAL TO 2 TIMES THE FLANGE THICKNESS. THE SIZE OF FILLET WELDS SHALL CONFORM TO THE REQUIREMENTS OF THE CURRENT ANSI/AASHTO/AWS "BRIDGE WELDING CODE". ELECTROSLAG WELDING WILL NOT BE PERMITTED.

WITH THE SOLE EXCEPTION OF EDGES AT SURFACES WHICH BEAR ON OTHER SURFACES, ALL SHARP EDGES AND ENDS OF SHAPES AND PLATES SHALL BE SLIGHTLY ROUNDED BY SUITABLE MEANS TO A RADIUS OF APPROXIMATELY 1/16 INCH OR EQUIVALENT FLAT SURFACE AT A SUITABLE ANGLE PRIOR TO PAINTING, GALVANIZING, OR METALLIZING.

HANDRAILS AND POSTS:

METAL STANDARDS AND FACES OF THE CONCRETE END POSTS FOR THE METAL RAIL SHALL BE SET NORMAL TO THE GRADE OF THE CURB, UNLESS OTHERWISE SHOWN ON PLANS. THE METAL RAIL AND TOPS OF CONCRETE POSTS USED WITH THE ALUMINUM RAIL SHALL BE BUILT PARALLEL TO THE GRADE OF THE CURB.

METAL HANDRAILS SHALL BE IN ACCORDANCE WITH THE PLANS. RAILS SHALL BE AS MANUFACTURED FOR BRIDGE RAILING. CASTINGS SHALL BE OF A UNIFORM APPEARANCE. FINS AND OTHER DEFORMATIONS RESULTING FROM CASTING OR OTHERWISE SHALL BE REMOVED IN A MANNER SO THAT A UNIFORM COLORING OF THE COMPLETED CASTING SHALL BE OBTAINED. CASTINGS WITH DISCOLORATIONS OR OF NON-UNIFORM COLORING WILL NOT BE ACCEPTED. CERTIFIED MILL REPORTS ARE REQUIRED FOR METAL RAILS AND POSTS.

SPECIAL NOTES:

GENERALLY, IN CASE OF DISCREPANCY, THIS STANDARD SHEET OF NOTES SHALL GOVERN OVER THE SPECIFICATIONS, BUT THE REMAINDER OF THE PLANS SHALL GOVERN OVER NOTES HEREON, AND SPECIAL PROVISIONS SHALL GOVERN OVER ALL. SEE SPECIFICATIONS ARTICLE 105-4.

ENGLISH

JANUARY, 1990

EROSION CONTROL PLAN

PROJECT REFERENCE NO.	SHEET NO.
B-4064	23
CHATHAM COUNTY BRIDGE # 95	

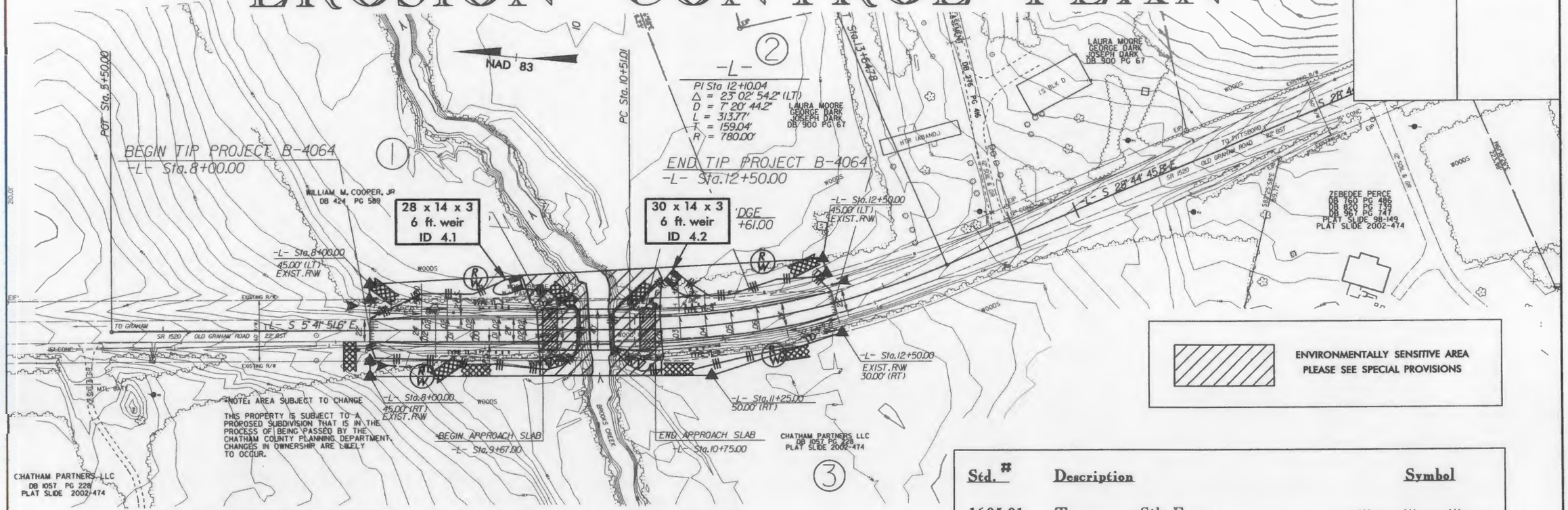

ROADSIDE ENVIRONMENTAL UNIT
DEPARTMENT OF TRANSPORTATION
DIVISION OF HIGHWAYS
RALEIGH, N.C.

2006 STANDARD SPECIFICATIONS

NOTES: ANY DEVIATION FROM OPTIONS GIVEN WILL REQUIRE PRIOR APPROVAL BY ENGINEER.

ADDITIONAL EROSION CONTROL DEVICES MAY NEED TO BE INSTALLED AS DIRECTED BY THE ENGINEER.

Std. #	Description	Symbol
1605.01	Temporary Silt Fence	
1630.05	Temporary Diversion	TD
1630.06	Special Stilling Basin	
1633.01	Temporary Rock Silt Check Type-A	
	Temporary Rock Silt Check Type-B	
1634.02	Temporary Rock Sediment Dam Type-B	

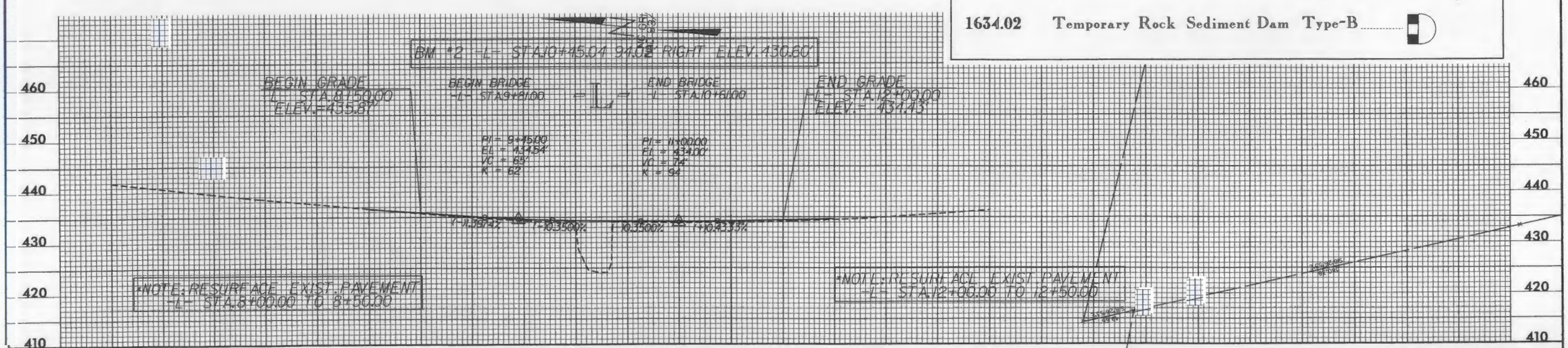

PROJECT REFERENCE NO.	SHEET NO.
B-4064	24
CHATHAM COUNTY BRIDGE # 95	

TEMPORARY ROCK SILT CHECK TYPE 'B' DETAIL

ROADSIDE ENVIRONMENTAL UNIT
DEPARTMENT OF TRANSPORTATION
DIVISION OF HIGHWAYS
RALEIGH, N.C.

2006 STANDARD SPECIFICATIONS

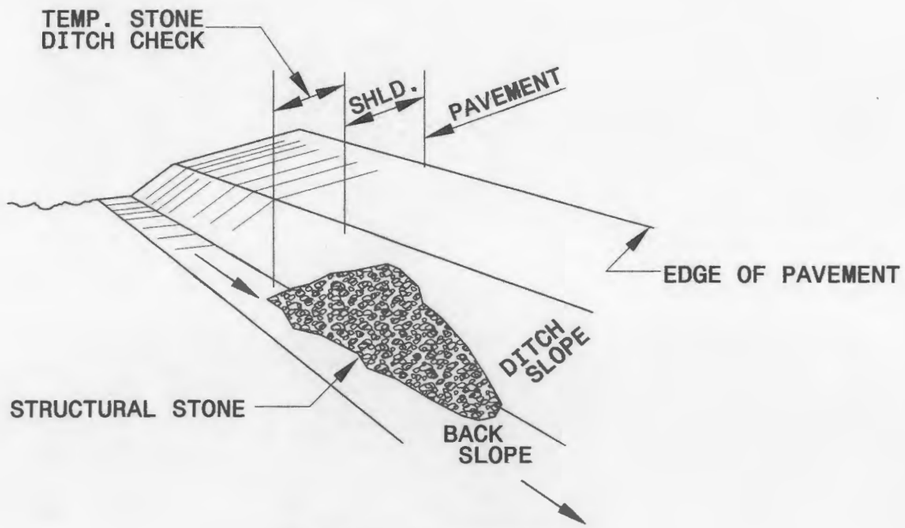

ISOMETRIC VIEW

NOTES:

USE CLASS 'B' EROSION CONTROL STONE FOR STRUCTURAL STONE.

THE ENGINEER MAY DIRECT THE OPTION OF CLASS "A" STONE FOR SITES HAVING LESS THAN ONE (1) ACRE DRAINAGE AREA AND A DITCH GRADE LESS THAN 3%.

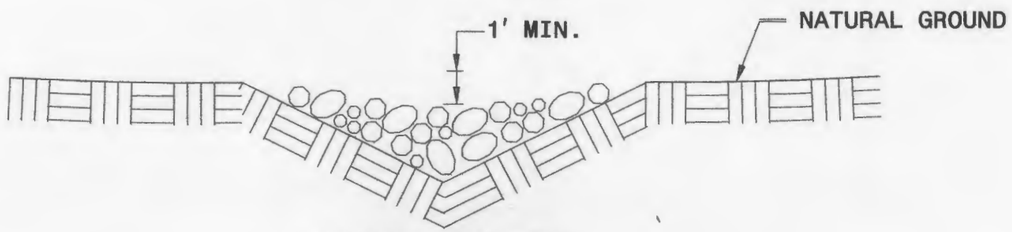

CROSS SECTION
VEE DITCH

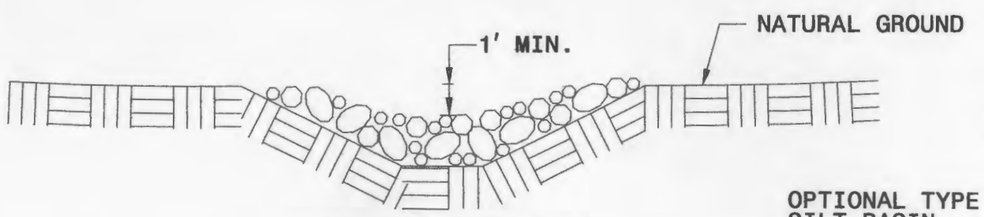

CROSS SECTION
TRAPEZOIDAL DITCH

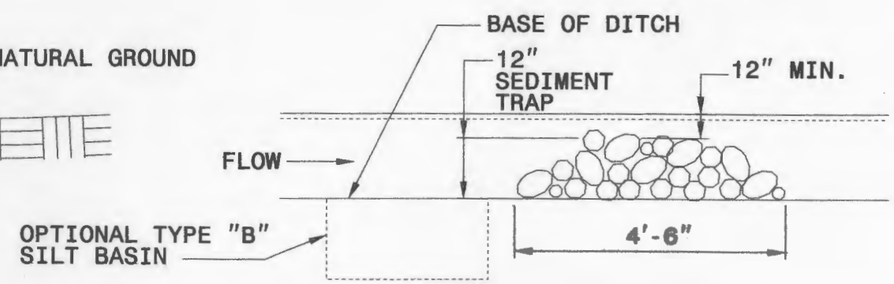

ELEVATION VIEW

ROADSIDE ENVIRONMENTAL UNIT
DEPARTMENT OF TRANSPORTATION
DIVISION OF HIGHWAYS
RALEIGH, N.C.

2006 STANDARD SPECIFICATIONS

PROJECT REFERENCE NO.	SHEET NO.
B-4064	25
CHATHAM COUNTY BRIDGE # 95	

COIR FIBER BAFFLE DETAIL

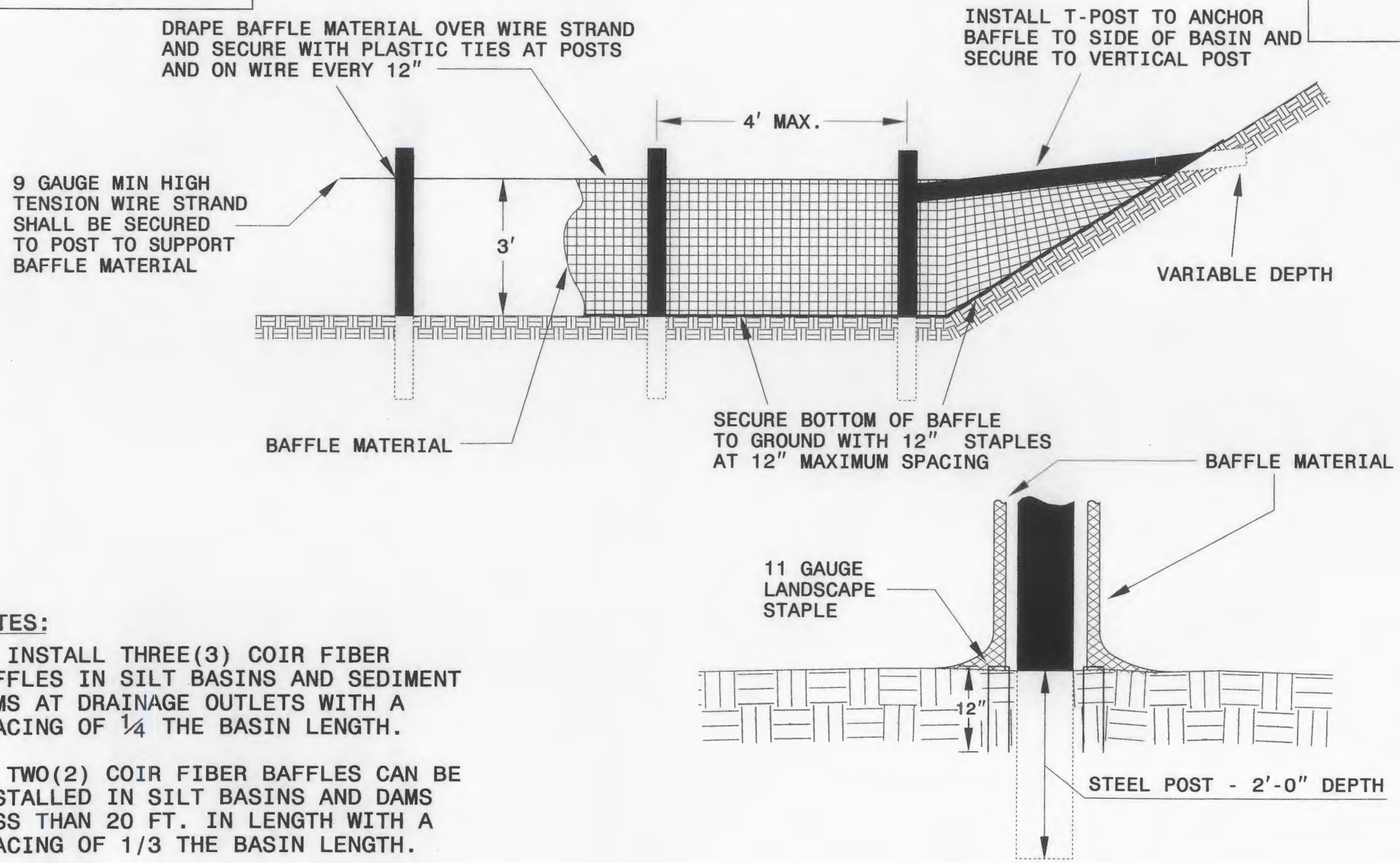

NOTES:

1. INSTALL THREE(3) COIR FIBER BAFFLES IN SILT BASINS AND SEDIMENT DAMS AT DRAINAGE OUTLETS WITH A SPACING OF ¼ THE BASIN LENGTH.

2. TWO(2) COIR FIBER BAFFLES CAN BE INSTALLED IN SILT BASINS AND DAMS LESS THAN 20 FT. IN LENGTH WITH A SPACING OF 1/3 THE BASIN LENGTH.

3. TOP HEIGHT OF COIR FIBER BAFFLES SHALL NOT BE BELOW BASE OF EMERGENCY SPILLWAY ELEVATION.

ROADSIDE ENVIRONMENTAL UNIT
DEPARTMENT OF TRANSPORTATION
DIVISION OF HIGHWAYS
RALEIGH, N.C.

2006 STANDARD SPECIFICATIONS

PROJECT REFERENCE NO.	SHEET NO.
B-4064	26
CHATHAM COUNTY BRIDGE # 95	

MATTING INSTALLATION DETAIL

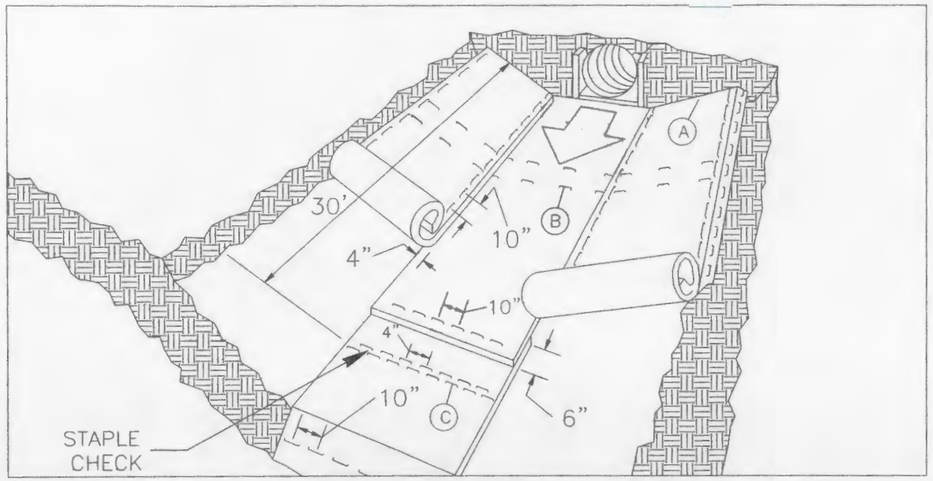

MATTING IN DITCHES

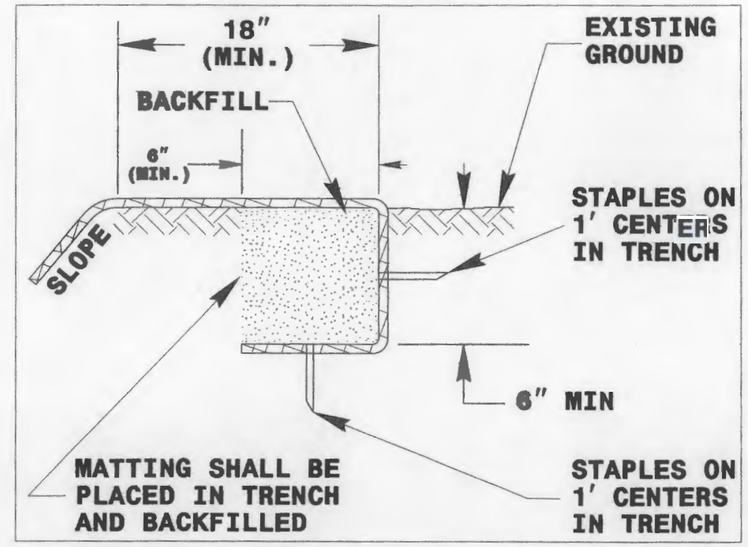

DIAGRAM (A)

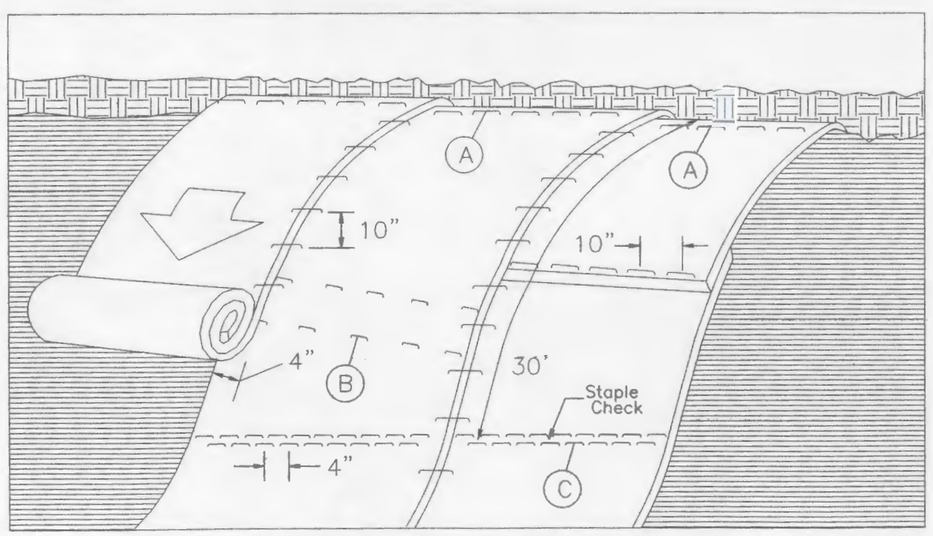

MATTING ON SLOPES

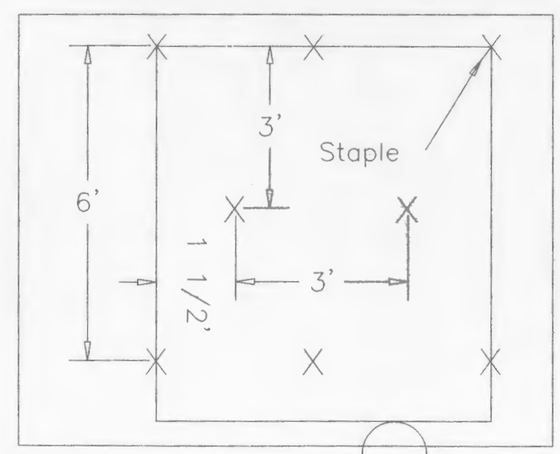

DIAGRAM (B)

Staple Check Pattern

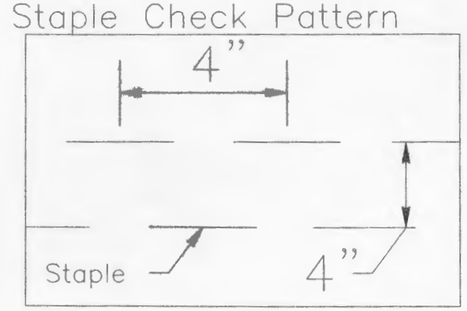

DIAGRAM (C)

NOTES:

THIS DETAIL APPLIES TO STRAW, EXCELSIOR, AND PERMANENT SOIL REINFORCEMENT MAT (PSRM) INSTALLATION.

STAPLES SHALL BE NO. 11 GAUGE STEEL WIRE FORMED INTO A "U" SHAPE WITH A MINIMUM THROAT WIDTH OF 1 INCH AND NOT LESS THAN 6 INCHES IN LENGTH.

NOT TO SCALE

STATE	STATE PROJECT REFERENCE NO.	SHEET NO.	TOTAL SHEETS
N.C.	B-4064	27	27
STATE PROJ. NO.	F. A. PROJ. NO.	DESCRIPTION	

PLANTING DETAILS

SEEDLING / LINER BAREROOT PLANTING DETAIL

HEALING IN

1. Locate a healing-in site in a shady, well protected area.
2. Excavate a flat bottom trench 12 inches deep and provide drainage.

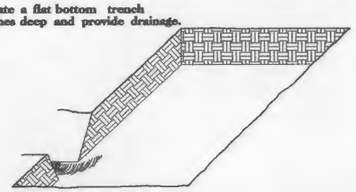

3. Backfill the trench with 2 inches well rotted sawdust. Place a 2 inch layer of well rotted sawdust at a sloping angle at one end of the trench.

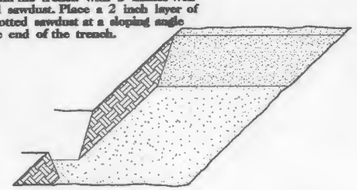

4. Place a single layer of plants against the sloping end so that the root collar is at ground level.

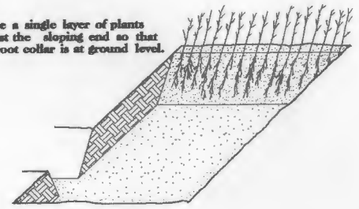

5. Place a 2 inch layer of well rotted sawdust over the roots maintaining a sloping angle.

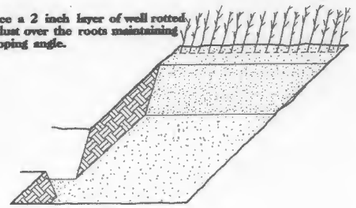

6. Repeat layers of plants and sawdust as necessary and water thoroughly.

DIBBLE PLANTING METHOD USING THE KBC PLANTING BAR

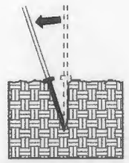

1. Insert planting bar as shown and pull handle toward planter.

2. Remove planting bar and place seedling at correct depth.

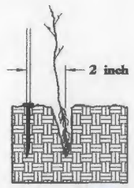

3. Insert planting bar 2 inches toward planter from seedling.

4. Pull handle of bar toward planter, firming soil at bottom.

5. Push handle forward firming soil at top.

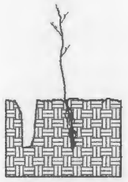

6. Leave compaction hole open. Water thoroughly.

PLANTING NOTES:

PLANTING BAG
During planting, seedlings shall be kept in a moist canvas bag or similar container to prevent the root systems from drying.

KBC PLANTING BAR
Planting bar shall have a blade with a triangular cross section, and shall be 12 inches long, 4 inches wide and 1 inch thick at center.

ROOT PRUNING
All seedlings shall be root pruned, if necessary, so that no roots extend more than 10 inches below the root collar.

REFORESTATION

☐ TREE REFORESTATION SHALL BE PLANTED 6 FT. TO 10 FT. ON CENTER, RANDOM SPACING, AVERAGING 8 FT. ON CENTER, APPROXIMATELY 680 PLANTS PER ACRE.

REFORESTATION

MIXTURE, TYPE, SIZE, AND FURNISH SHALL CONFORM TO THE FOLLOWING:

25%	LIRIODENDRON TULIPIFERA	TULIP POPLAR	12 in - 18 in BR
25%	PLATANUS OCCIDENTALIS	SYCAMORE	12 in - 18 in BR
25%	FRAXINUS PENNSYLVANICA	GREEN ASH	12 in - 18 in BR
25%	BETULA NIGRA	RIVER BIRCH	12 in - 18 in BR

REFORESTATION DETAIL SHEET

N.C.D.O.T. - ROADSIDE ENVIRONMENTAL UNIT

STATE OF NORTH CAROLINA
DIVISION OF HIGHWAYS

TRANSPORTATION MANAGEMENT PLAN

CHATHAM COUNTY

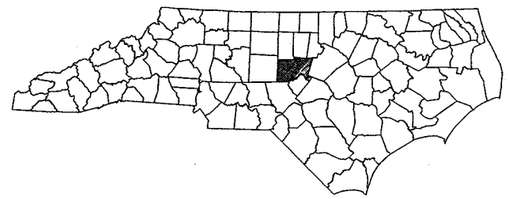

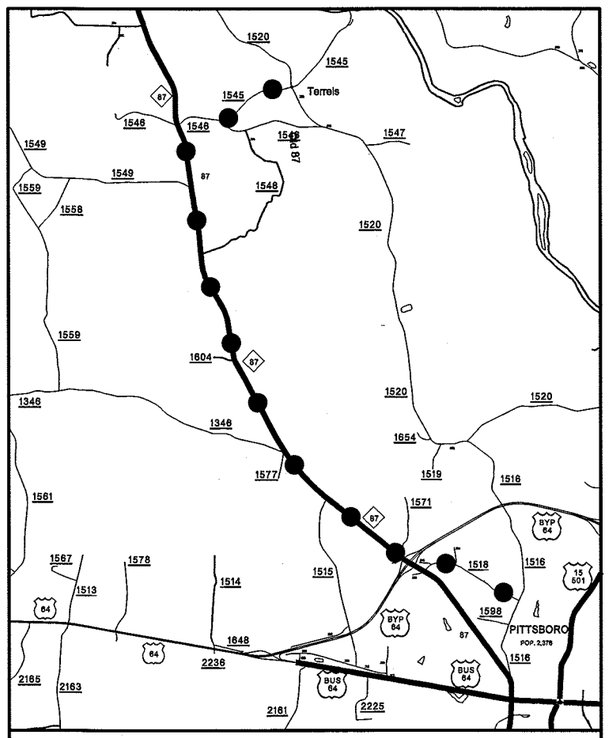

VICINITY MAP

DETOUR ROUTE

INDEX OF SHEETS

SHEET NO.	TITLE
TMP-1	TITLE SHEET, AND INDEX OF SHEETS
TMP-1A	LIST OF APPLICABLE ROADWAY STANDARD DRAWINGS, LEGEND, AND TEMPORARY PAVEMENT MARKING
TMP-1B	TRANSPORTATION OPERATIONS PLAN: (MANAGEMENT STRATEGIES, GENERAL NOTES AND LOCAL NOTES)
TMP-2	OFFSITE DETOUR
SD-1	SPECIAL SIGN DESIGN

SHEET NO.
TMP-1

B-4064

TIP PROJECT:

WORK ZONE SAFETY & MOBILITY
"from the MOUNTAINS to the COAST"

N.C.D.O.T. WORK ZONE TRAFFIC CONTROL
1561 MAIL SERVICE CENTER (MSC) RALEIGH, NC 27699-1561
750 N. GREENFIELD PARKWAY, GARNER, NC 27529 (DELIVERY)
PHONE: (919) 773-2800 FAX: (919) 771-2745

J. S. BOURNE, P.E. — STATE TRAFFIC MANAGEMENT ENGINEER
J. ISHAK, P.E. — TRAFFIC CONTROL PROJECT ENGINEER
B. SCHOENBAUER, P.E. — TRAFFIC CONTROL PROJECT DESIGN ENGINEER
S. HASSAN — TRAFFIC CONTROL DESIGN ENGINEER

DIVISION OF HIGHWAYS · STATE OF NORTH CAROLINA · DEPARTMENT OF TRANSPORTATION · WORK ZONE TRAFFIC CONTROL

APPROVED: Ben Schoenbauer
DATE: 8/12/2011

SEAL

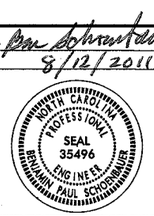

12-AUG-2011 09:54
\\DOT\dfsroot\Proj\TIPProjects-B\B4064\Traffic\TrafficControl\TCP\B-4064_TC_TMP_01.dgn
snassan AT TE2483713

PROJ. REFERENCE NO.	SHEET NO.
B-4064	TMP-1A

ROADWAY STANDARD DRAWINGS

THE FOLLOWING ROADWAY STANDARDS AS SHOWN IN "ROADWAY STANDARD DRAWINGS" - PROJECT SERVICES UNIT - N.C. DEPARTMENT OF TRANSPORTATION - RALEIGH, N.C., DATED JULY 2006 ARE APPLICABLE TO THIS PROJECT AND BY REFERENCE HEREBY ARE CONSIDERED A PART OF THESE PLANS:

STD. NO.	TITLE
1101.03	TEMPORARY ROAD CLOSURES
1101.11	TRAFFIC CONTROL DESIGN TABLES
1110.01	STATIONARY WORK ZONE SIGNS
1145.01	BARRICADES

LEGEND

GENERAL

- DIRECTION OF TRAFFIC FLOW
- DIRECTION OF PEDESTRIAN TRAFFIC FLOW
- EXIST. PVMT.
- NORTH ARROW
- PROPOSED PVMT.
- WORK AREA
- REMOVAL
- USER DEFINED (IF NEEDED)
- USER DEFINED (IF NEEDED)

TRAFFIC CONTROL DEVICES

- BARRICADE (TYPE III)
- CONE
- DRUM — SKINNY DRUM — TUBULAR MARKER
- TEMPORARY CRASH CUSHION
- FLASHING ARROW PANEL (TYPE C)
- FLAGGER
- LAW ENFORCEMENT
- TRUCK MOUNTED IMPACT ATTENUATOR (TMIA)
- CHANGEABLE MESSAGE SIGN

TEMPORARY SIGNING

- PORTABLE SIGN
- STATIONARY SIGN
- STATIONARY OR PORTABLE SIGN

SIGNALS

- EXISTING
- PROPOSED
- TEMPORARY

PAVEMENT MARKINGS

- EXISTING LINES
- TEMPORARY LINES

PAVEMENT MARKERS

- CRYSTAL/CRYSTAL
- CRYSTAL/RED
- YELLOW/YELLOW

PAVEMENT MARKING SYMBOLS

- PAVEMENT MARKING SYMBOLS

TEMPORARY PAVEMENT MARKING

APPROVED: Ben Schonbauer DATE: 8/12/2011

SEAL

NORTH CAROLINA PROFESSIONAL SEAL 35496 ENGINEER BENJAMIN PAUL SCHONBAUER

DIVISION OF HIGHWAYS · STATE OF NORTH CAROLINA · DEPARTMENT OF TRANSPORTATION · WORK ZONE TRAFFIC CONTROL

ROADWAY STANDARD DRAWINGS & LEGEND

12-AUG-2011 09:47
\\Dot\dfsroot\Proj\TIPProjects-B\B4064\Traffic\TrafficControl\TCP\B-4064_TC_TMP_01.dgn
shasson AT TE248373

PROJ. REFERENCE NO.	SHEET NO.
B-4064	TMP-1B

MANAGEMENT STRATEGIES

THE FOLLOWING LISTED STRATEGIES DERIVE FROM DETAILED DESIGN LEVEL ASSESSMENTS OF THE WORK ZONE IMPACTS CONDUCTED DURING THE DEVELOPMENTAL STATES OF THIS TRANSPORTATIONS MANAGEMENT PLAN (TMP).

RECOMMENDED MANAGEMENT STRATEGIES RELATIVE TO THIS TMP ARE AS FOLLOWS:

- FULL ROAD CLOSURES

  TRAFFIC TO BE MAINTAINED ON THE FOLLOWING OFF-SITE DETOUR ROUTE THROUGHOUT THE DURATION OF THIS PROJECT.

  SR 1546 (CHICKEN BRIDGE RD), NC 87, SR 1518 (X CAMPBELL RD), AND SR 1516 (OLD GRAHAM RD).

GENERAL NOTES

CHANGES MAY BE REQUIRED WHEN PHYSICAL DIMENSIONS IN THE DETAIL DRAWINGS, STANDARD DETAILS, AND ROADWAY DETAILS ARE NOT ATTAINABLE TO MEET FIELD CONDITIONS OR RESULT IN DUPLICATE OR UNDESIRED OVERLAPPING OF DEVICES. MODIFICATION MAY INCLUDE: MOVING, SUPPLEMENTING, COVERING, OR REMOVAL OF DEVICES AS DIRECTED BY THE ENGINEER.

THE FOLLOWING GENERAL NOTES APPLY AT ALL TIMES FOR THE DURATION OF THE CONSTRUCTION PROJECT EXCEPT WHEN OTHERWISE NOTED IN THE PLAN OR DIRECTED BY THE ENGINEER.

TRAFFIC PATTERN ALTERATIONS

A) NOTIFY THE ENGINEER TWENTY ONE (21) CALENDAR DAYS PRIOR TO ANY TRAFFIC PATTERN ALTERATION.

SIGNING

B) PROVIDE SIGNING AND DEVICES REQUIRED TO CLOSE THE ROAD ACCORDING TO THE ROADWAY STANDARD DRAWINGS AND TRANSPORTATION MANAGEMENT PLANS.

   PROVIDE SIGNING REQUIRED FOR THE OFF-SITE DETOUR ROUTE AS SHOWN IN THE TRANSPORTATION MANAGEMENT PLANS.

C) COVER OR REMOVE ALL SIGNS AND DEVICES REQUIRED TO CLOSE THE ROAD WHEN ROAD CLOSURE IS NOT IN OPERATION.

   COVER OR REMOVE ALL SIGNS REQUIRED FOR THE OFF-SITE DETOUR WHEN THE DETOUR IS NOT IN OPERATION.

D) ENSURE ALL NECESSARY SIGNING IS IN PLACE PRIOR TO ALTERING ANY TRAFFIC PATTERN.

TRAFFIC CONTROL DEVICES

E) PLACE TYPE III BARRICADES, WITH "ROAD CLOSED" SIGN R11-2 ATTACHED, OF SUFFICIENT LENGTH TO CLOSE ENTIRE ROADWAY.

PAVEMENT MARKINGS AND MARKERS (REFER TO SIGNING AND DELINATION PLANS)

F) INSTALL PAVEMENT MARKINGS AND PAVEMENT MARKERS ON THE FINAL SURFACE AS SHOWN IN THE PAVEMENT MARKING PLAN.

G) TIE PROPOSED PAVEMENT MARKING LINES TO EXISTING PAVEMENT MARKING LINES.

GENERAL NOTES / LOCAL NOTES

STEP 1: USING RSD 1101.03, SHEET 1 OF 9, SHEETS TMP-2 AND SD-1, INSTALL DETOUR SIGNS, ROAD CLOSURE SIGNS, AND PLACE TYPE III BARRICADES TO CLOSE SR 1520 (OLD GRAHAM RD) TO THROUGH TRAFFIC, AND DETOUR TRAFFIC OFFSITE.

STEP 2: AWAY FROM TRAFFIC, COMPLETE THE FOLLOWING:

1) REMOVE EXISTING STRUCTURE (NO. 95) AND CONSTRUCT PROPOSED STRUCTURE. SEE ROADWAY AND STUCTURE PLANS.

2) CONSTRUCT PROPOSED ROADWAY UP TO AND INCLUDING FINAL SURFACE COURSE LAYER FROM -L- STA. 8+00 +/- TO -L- STA. 12+50 +/-. SEE ROADWAY PLANS.

3) PLACE FINAL PAVEMENT MARKINGS AND TIE INTO EXISTING PAVEMENT MARKINGS.

STEP 3: REMOVE ALL WORKZONE TRAFFIC CONTROL DEVICES, ALL ROAD CLOSURE SIGNING, AND ALL DETOUR SIGNING. OPEN SR 1520 (OLD GRAHAM RD) TO PROPOSED FINAL TRAFFIC PATTERN.

APPROVED: Ben Schobauer DATE: 8/12/2011

SEAL

NORTH CAROLINA PROFESSIONAL SEAL 35496 ENGINEER BENJAMIN PAUL SCHOBAUER

DIVISION OF HIGHWAYS • STATE OF NORTH CAROLINA • DEPARTMENT OF TRANSPORTATION • WORK ZONE TRAFFIC CONTROL

TRANSPORTATION OPERATIONS PLAN

12-AUG-2011 09:47
\\Dot\ddtsroot01\Proj\TIPProjects-B\B4064\Traffic\TrafficControl\TCP\B-4064_TC_TMP_01.dgn
snassan AT TE248373

PROJ. REFERENCE NO.	SHEET NO.
B-4064	TMP-2

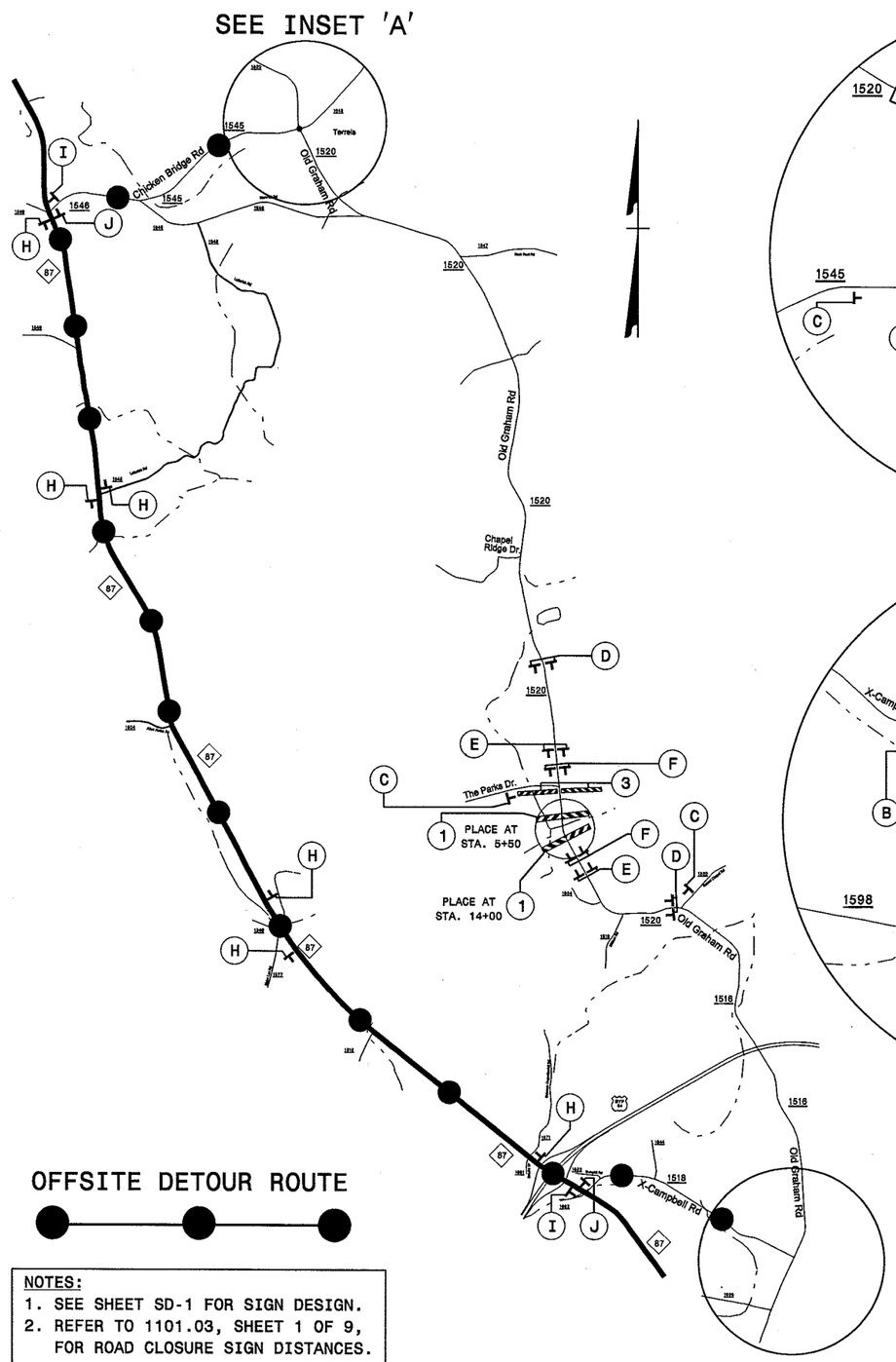

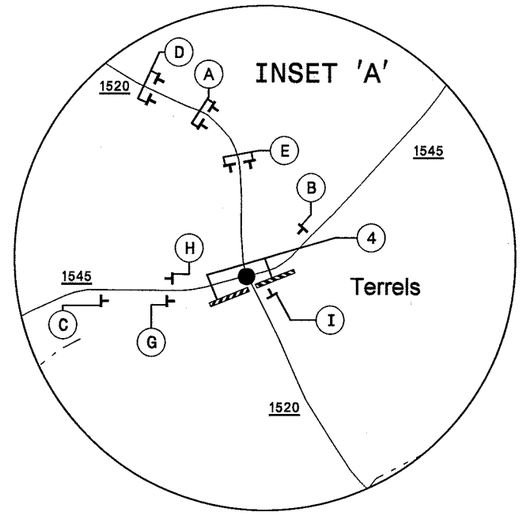

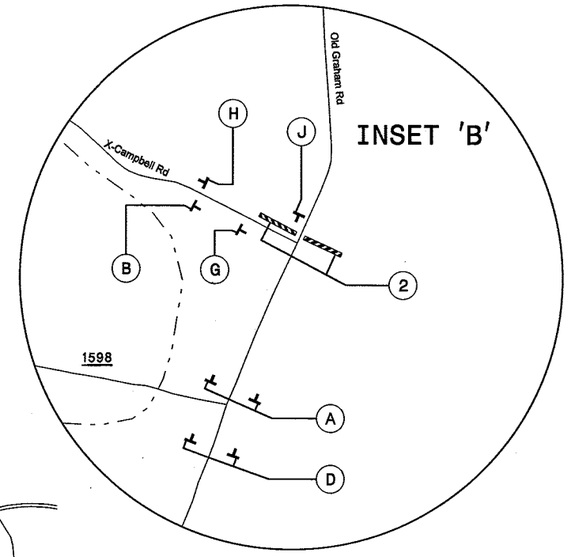

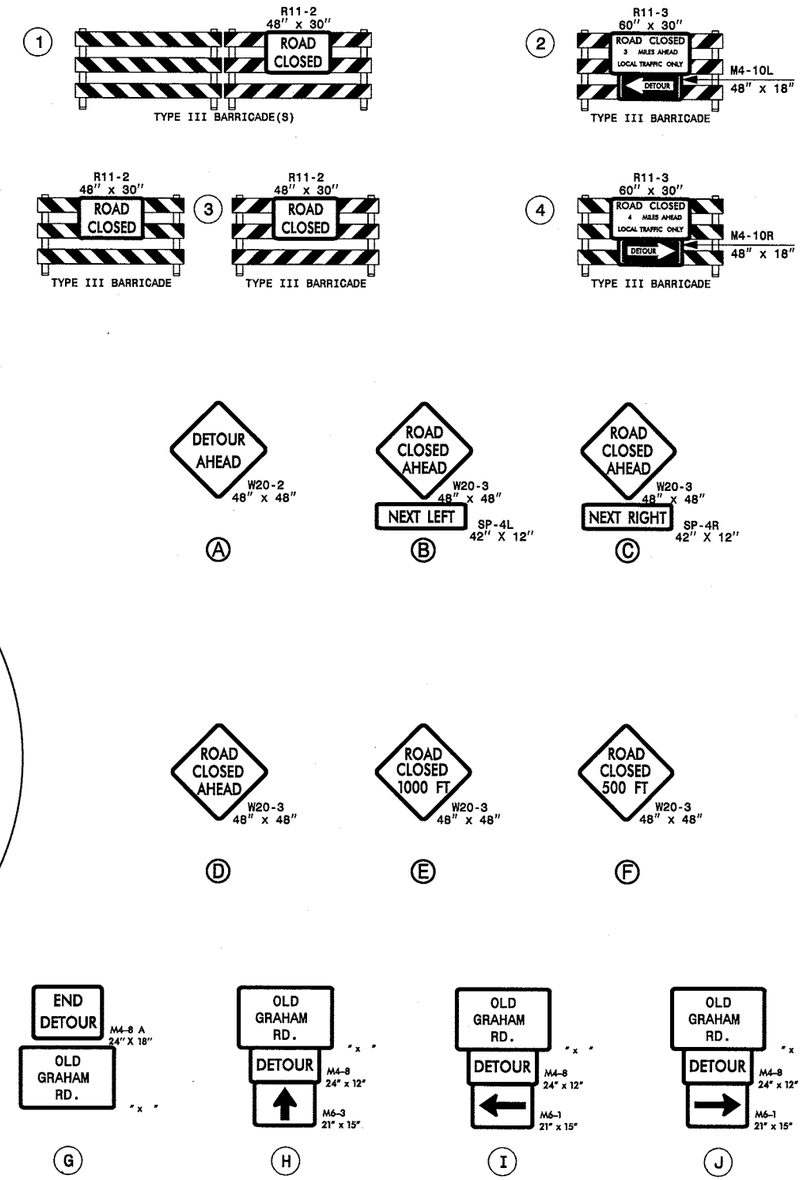

OFFSITE DETOUR ROUTE

NOTES:
1. SEE SHEET SD-1 FOR SIGN DESIGN.
2. REFER TO 1101.03, SHEET 1 OF 9, FOR ROAD CLOSURE SIGN DISTANCES.
3. INSTALL DETOUR SIGNS AS DIRECTED BY THE ENGINEER.

APPROVED: _____ DATE: 8/12/2011

SEAL

NORTH CAROLINA PROFESSIONAL SEAL 35496 ENGINEER BENJAMIN PAUL SCHOENHAVER

DIVISION OF HIGHWAYS STATE OF NORTH CAROLINA DEPARTMENT OF TRANSPORTATION WORK ZONE TRAFFIC CONTROL

OFFSITE DETOUR

12-AUG-2011 09:47
\\Dot\tfsroot01\Proj\TIPProjects-B\B4064\Traffic\TrafficControl\TCP\B-4064_TC_TMP_02.dgn
shassan AT TE248373

PROJ. REFERENCE NO.	SHEET NO.
B-4064	SD-1

SIGN NUMBER: SP11339
TYPE: STATIONARY
QUANTITY: SEE PLANS

SIGN WIDTH: 3'-0"
HEIGHT: 3'-0"
TOTAL AREA: 9.0 Sq.Ft.

BORDER TYPE: INSET
RECESS: 0.38"
WIDTH: 0.63"
RADII: 1.5"

NO. Z BARS:
LENGTH:

BACKG COLOR: Fluorescent Orange
COPY COLOR: Black

SYMBOL	X	Y	WID	HT

MAT'L: 0.080" (2.0 mm) ALUMINUM
0.079" (2.0 mm) COMPOSITE

DESIGN BY: S.JOHNS
PROJECT ID: B-4064
CHECKED BY: S.KUNZ
DIV: 8
DATE: Aug 11, 2011

USE NOTES: 1,2

1. Legend and border shall be direct applied black non-reflective sheeting.
2. Background shall be Type VII, VIII, or IX (prismatic) fluorescent orange retroreflective sheeting.

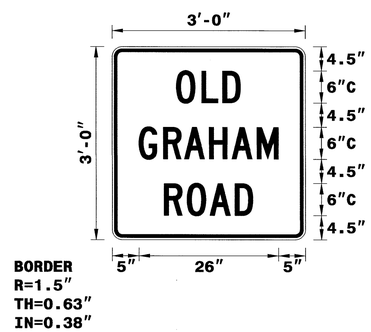

Spacing Factor is 1 unless specified otherwise

LETTER POSITIONS

Letter spacings are to start of next letter

																										Series/Size Text Length
		O	L	D																						C 2000
	12	4.7	3.9	3.4	12																					12
		G	R	A	H	A	M																			C 2000
	5	4.6	3.9	4.7	4.2	4.7	4	5																		26
		R	O	A	D																					C 2000
	9.7	4.3	4.3	4.7	3.4	9.7																				16.6

NORTH CAROLINA D.O.T. SIGN DETAIL

APPROVED: DATE: 8/11/14

SEAL

NORTH CAROLINA PROFESSIONAL SEAL 022959 ENGINEER RONALD W. KING

SIGN DESIGN

SCALE:	NONE
DATE:	8/11
DWG. BY:	SWJ
DESIGN BY:	SWJ
REVIEWED BY:	SBK

DIVISION OF HIGHWAYS · STATE OF NORTH CAROLINA · TRAFFIC ENGINEERING BRANCH · TRAFFIC CONTROL UNIT

REVISIONS	
CADD FILE	

11-AUG-2011 16:31
R:\TIPProjects\B-4064\Traffic\Signing\CADD\Sign Designs\B-4064_trafficSGN.dgn
sjohns at 1024,1937