CONTRACT #DO00067 PROJECT NO. B-4308

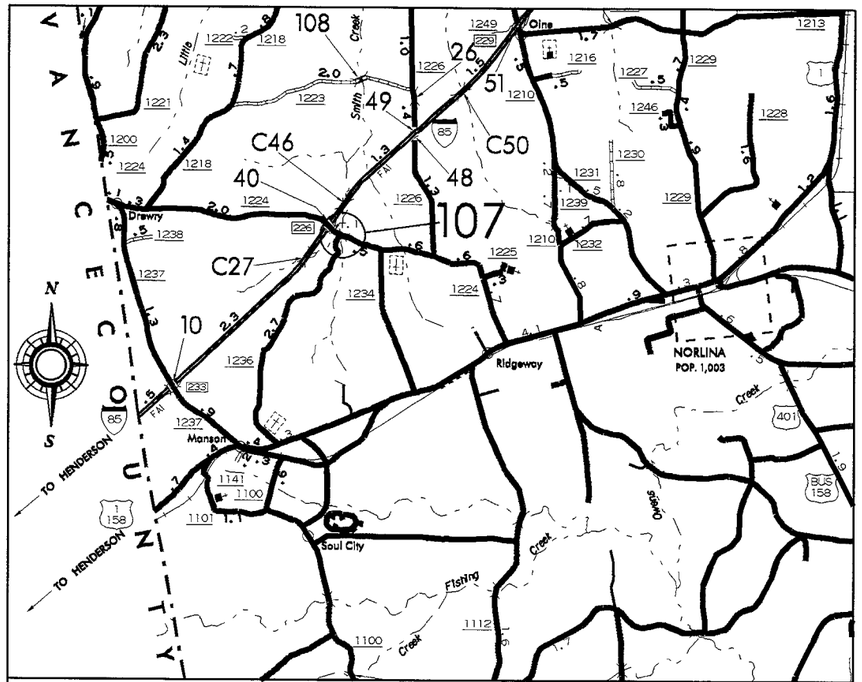

VICINITY MAP
(NOT TO SCALE)

STATE OF NORTH CAROLINA
DIVISION OF HIGHWAYS

WARREN COUNTY

STATE	STATE PROJECT REFERENCE NO.	
N.C.	B-4308	TITLE
STATE PROJECT NO.	F.A. PROJ. NO.	DESCRIPTION
33645.1.1		P.E.

LOCATION: SR 1224 BRIDGE NO. 107 OVER SMITH CREEK

TYPE OF WORK: BRIDGE REPLACEMENT WITH PRE-STRESSED CONCRETE CORED SLABS SUPERSTRUCTURE ON STEEL PILE END BENTS AND ROADWAY APPROACHES

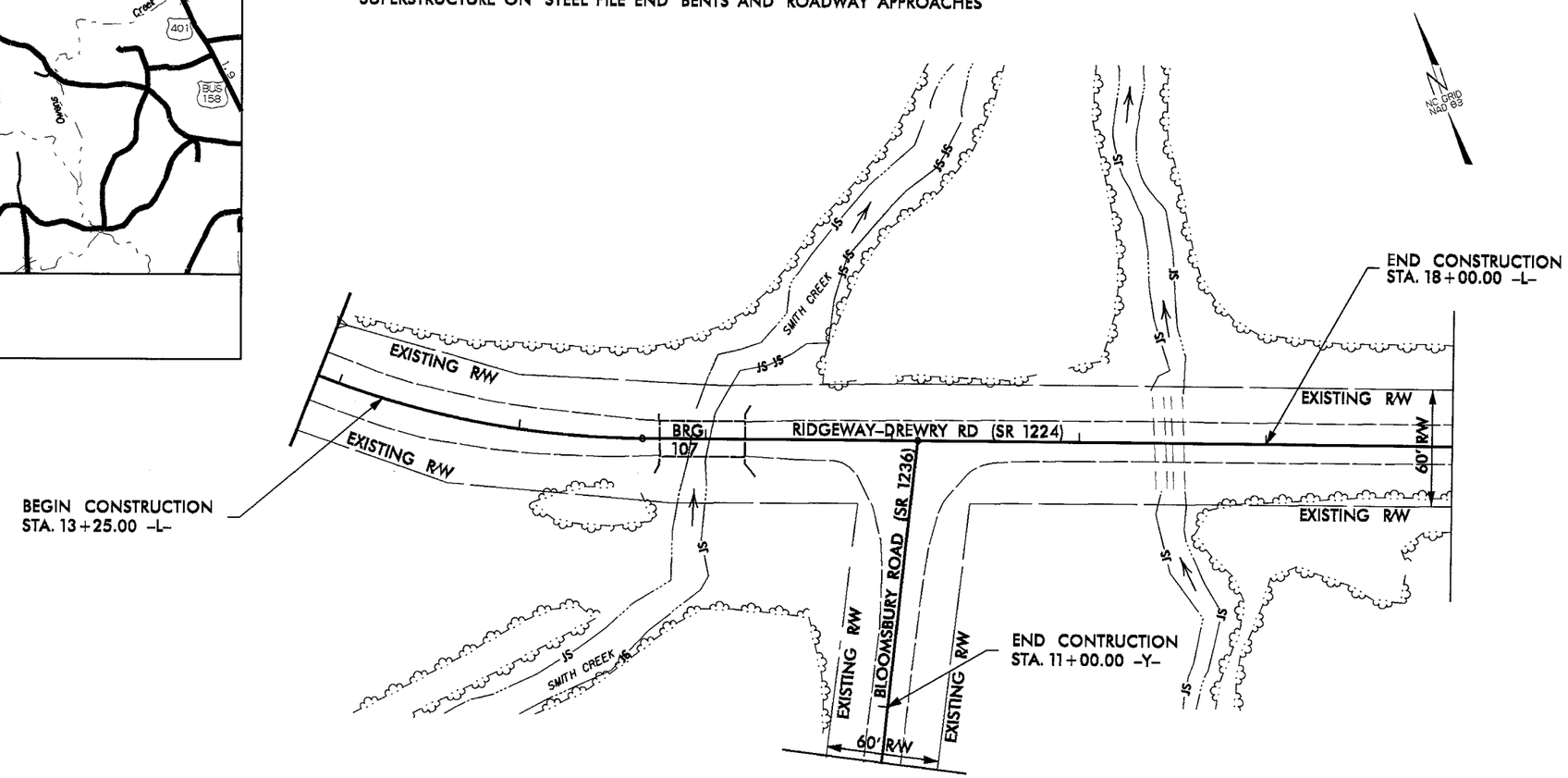

STATE OF NORTH CAROLINA DEPARTMENT OF TRANSPORTATION

DESIGN DATA

ADT 2008 = 440

PROJECT LENGTH

LENGTH ROADWAY TIP PROJECT = 0.101 MILE

LENGTH STRUCTURE TIP PROJECT = 0.016 MILE

TOTAL LENGTH TIP PROJECT = 0.117 MILE

Prepared in the Office of:
BRIDGE MANAGEMENT UNIT
NORTH CAROLINA DEPARTMENT OF TRANSPORTATION

2006 STANDARD SPECIFICATIONS

LETTING DATE:
SEPTEMBER 23, 2010

DAN HOLDERMAN, PE
STATE BRIDGE MANAGEMENT ENGINEER

NCDOT CONTACT: MIKE SUMMERS
BRIDGE MANAGEMENT PROJECT MANAGER

NORTH CAROLINA PROFESSIONAL SEAL 20208 ENGINEER ERIC B. NELSON, JR. 08/25/10

RICK NELSON, PE
DESIGN ENGINEER

B-4308

WARREN

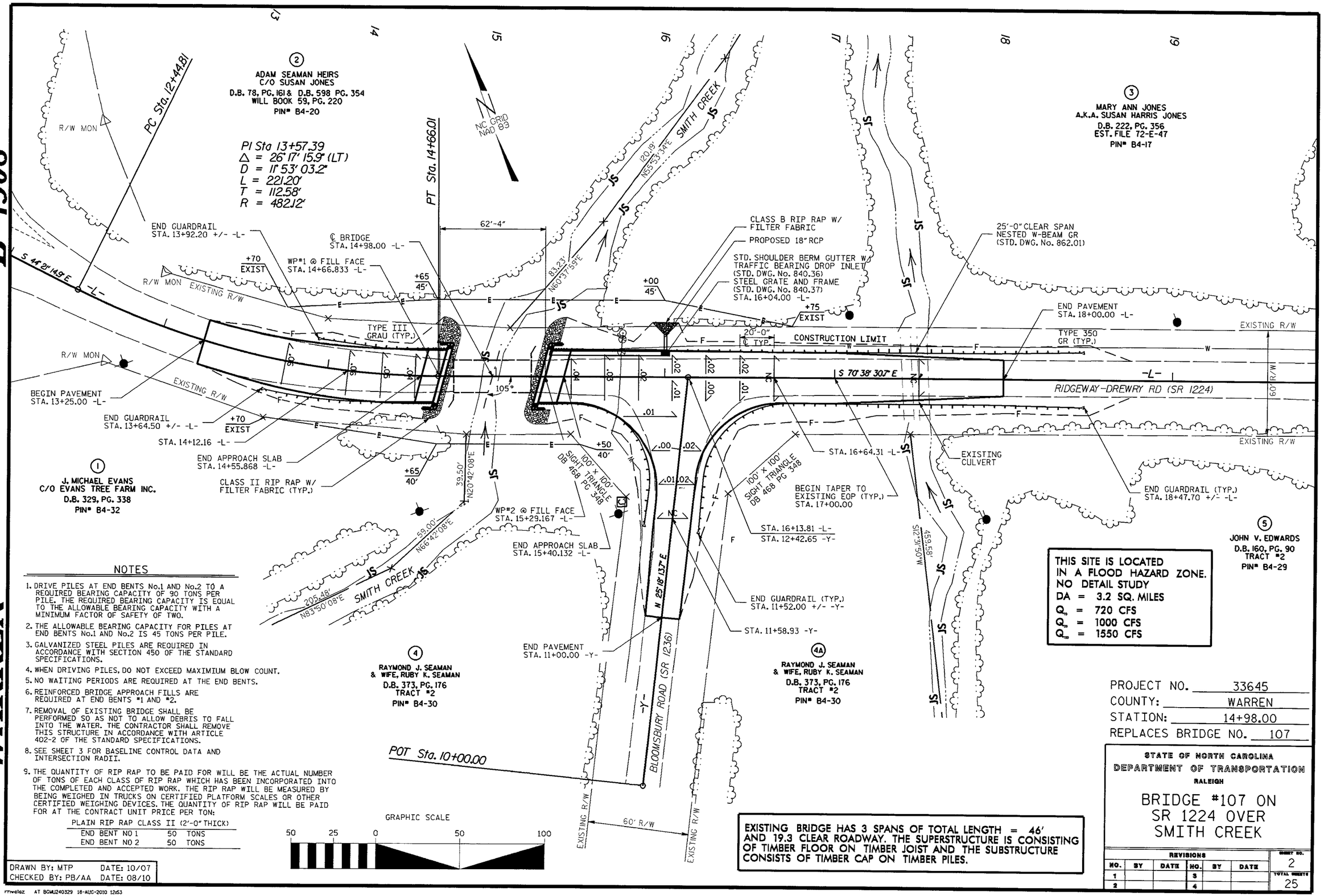

NOTES

1. DRIVE PILES AT END BENTS No.1 AND No.2 TO A REQUIRED BEARING CAPACITY OF 90 TONS PER PILE. THE REQUIRED BEARING CAPACITY IS EQUAL TO THE ALLOWABLE BEARING CAPACITY WITH A MINIMUM FACTOR OF SAFETY OF TWO.
2. THE ALLOWABLE BEARING CAPACITY FOR PILES AT END BENTS No.1 AND No.2 IS 45 TONS PER PILE.
3. GALVANIZED STEEL PILES ARE REQUIRED IN ACCORDANCE WITH SECTION 450 OF THE STANDARD SPECIFICATIONS.
4. WHEN DRIVING PILES, DO NOT EXCEED MAXIMIUM BLOW COUNT.
5. NO WAITING PERIODS ARE REQUIRED AT THE END BENTS.
6. REINFORCED BRIDGE APPROACH FILLS ARE REQUIRED AT END BENTS #1 AND #2.
7. REMOVAL OF EXISTING BRIDGE SHALL BE PERFORMED SO AS NOT TO ALLOW DEBRIS TO FALL INTO THE WATER. THE CONTRACTOR SHALL REMOVE THIS STRUCTURE IN ACCORDANCE WITH ARTICLE 402-2 OF THE STANDARD SPECIFICATIONS.
8. SEE SHEET 3 FOR BASELINE CONTROL DATA AND INTERSECTION RADII.
9. THE QUANTITY OF RIP RAP TO BE PAID FOR WILL BE THE ACTUAL NUMBER OF TONS OF EACH CLASS OF RIP RAP WHICH HAS BEEN INCORPORATED INTO THE COMPLETED AND ACCEPTED WORK. THE RIP RAP WILL BE MEASURED BY BEING WEIGHED IN TRUCKS ON CERTIFIED PLATFORM SCALES OR OTHER CERTIFIED WEIGHING DEVICES. THE QUANTITY OF RIP RAP WILL BE PAID FOR AT THE CONTRACT UNIT PRICE PER TON:

PLAIN RIP RAP CLASS II (2'-0" THICK)		
END BENT NO 1	50	TONS
END BENT NO 2	50	TONS

THIS SITE IS LOCATED IN A FLOOD HAZARD ZONE.
NO DETAIL STUDY
DA = 3.2 SQ. MILES
Q_{25} = 720 CFS
Q_{50} = 1000 CFS
Q_{100} = 1550 CFS

EXISTING BRIDGE HAS 3 SPANS OF TOTAL LENGTH = 46' AND 19.3 CLEAR ROADWAY. THE SUPERSTRUCTURE IS CONSISTING OF TIMBER FLOOR ON TIMBER JOIST AND THE SUBSTRUCTURE CONSISTS OF TIMBER CAP ON TIMBER PILES.

PROJECT NO. 33645
COUNTY: WARREN
STATION: 14+98.00
REPLACES BRIDGE NO. 107

STATE OF NORTH CAROLINA
DEPARTMENT OF TRANSPORTATION
RALEIGH

BRIDGE #107 ON SR 1224 OVER SMITH CREEK

REVISIONS						SHEET NO.
NO.	BY	DATE	NO.	BY	DATE	2
1			3			TOTAL SHEETS
2			4			25

DRAWN BY: MTP DATE: 10/07
CHECKED BY: PB/AA DATE: 08/10

rtrwel6z AT BGMU240329 18-AUG-2010 12:53

B-4308

WARREN

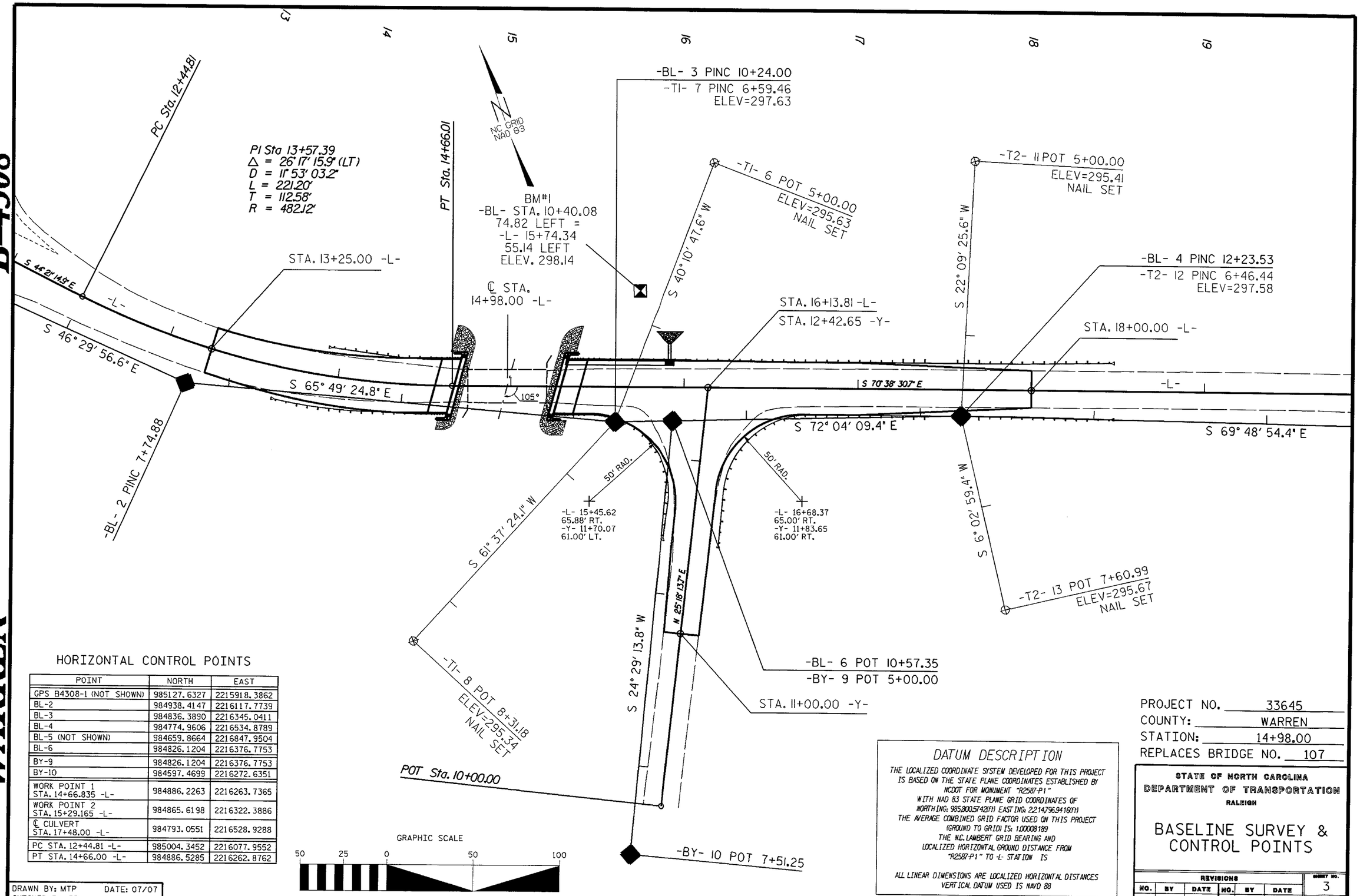

HORIZONTAL CONTROL POINTS

POINT	NORTH	EAST
GPS B4308-1 (NOT SHOWN)	985127.6327	2215918.3862
BL-2	984938.4147	2216117.7739
BL-3	984836.3890	2216345.0411
BL-4	984774.9606	2216534.8789
BL-5 (NOT SHOWN)	984659.8664	2216847.9504
BL-6	984826.1204	2216376.7753
BY-9	984826.1204	2216376.7753
BY-10	984597.4699	2216272.6351
WORK POINT 1 STA. 14+66.835 -L-	984886.2263	2216263.7365
WORK POINT 2 STA. 15+29.165 -L-	984865.6198	2216322.3886
℄ CULVERT STA. 17+48.00 -L-	984793.0551	2216528.9288
PC STA. 12+44.81 -L-	985004.3452	2216077.9552
PT STA. 14+66.00 -L-	984886.5285	2216262.8762

DATUM DESCRIPTION

THE LOCALIZED COORDINATE SYSTEM DEVELOPED FOR THIS PROJECT IS BASED ON THE STATE PLANE COORDINATES ESTABLISHED BY NCDOT FOR MONUMENT "R2587-P1" WITH NAD 83 STATE PLANE GRID COORDINATES OF NORTHING: 985,800.5742(FT) EASTING: 2,214,796.9416(FT) THE AVERAGE COMBINED GRID FACTOR USED ON THIS PROJECT (GROUND TO GRID) IS: 1.00008189 THE N.C. LAMBERT GRID BEARING AND LOCALIZED HORIZONTAL GROUND DISTANCE FROM "R2587-P1" TO -L- STATION IS

ALL LINEAR DIMENSIONS ARE LOCALIZED HORIZONTAL DISTANCES VERTICAL DATUM USED IS NAVD 88

PROJECT NO. 33645
COUNTY: WARREN
STATION: 14+98.00
REPLACES BRIDGE NO. 107

STATE OF NORTH CAROLINA
DEPARTMENT OF TRANSPORTATION
RALEIGH

BASELINE SURVEY & CONTROL POINTS

REVISIONS						SHEET NO.
NO.	BY	DATE	NO.	BY	DATE	3
1			3			TOTAL SHEETS
2			4			25

DRAWN BY: MTP DATE: 07/07
CHECKED BY: PB/AA DATE: 08/10

rmwelez AT BGM1240329 18-AUG-2010 12:59

B-4308

WARREN

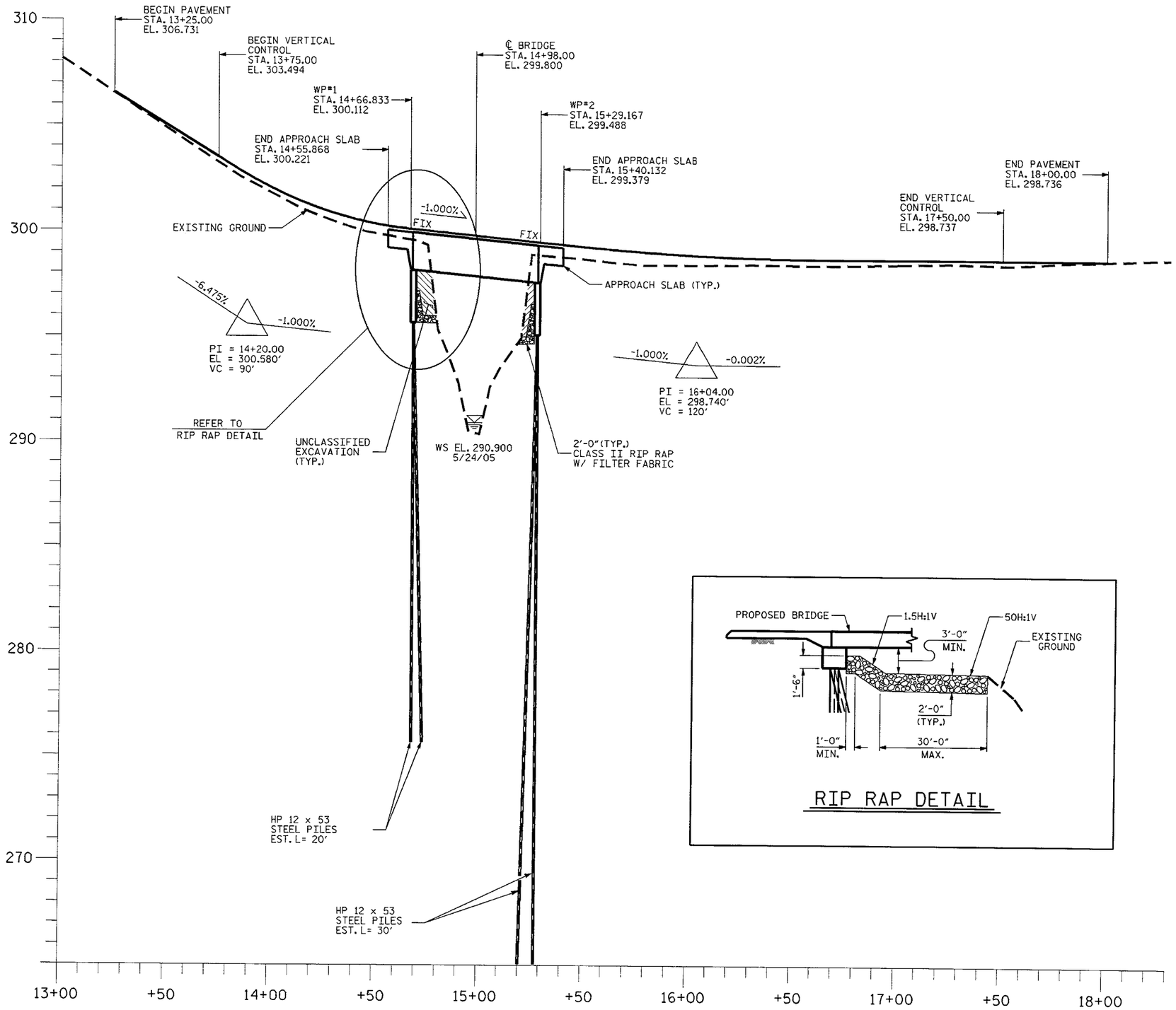

RIP RAP DETAIL

PROJECT NO. 33645
COUNTY: WARREN
STATION: 14+98.00
REPLACES BRIDGE NO. 107

STATE OF NORTH CAROLINA
DEPARTMENT OF TRANSPORTATION
RALEIGH

PROFILE
ALONG -L- LINE

REVISIONS						SHEET NO.
NO.	BY	DATE	NO.	BY	DATE	4
1			3			TOTAL SHEETS
2			4			25

DRAWN BY: MTP DATE: 10/07
CHECKED BY: RA DATE: 08/10

rnwelez AT BGMU240329 18-AUG-2010 13:06

PDB/RA

B-4308

WARREN

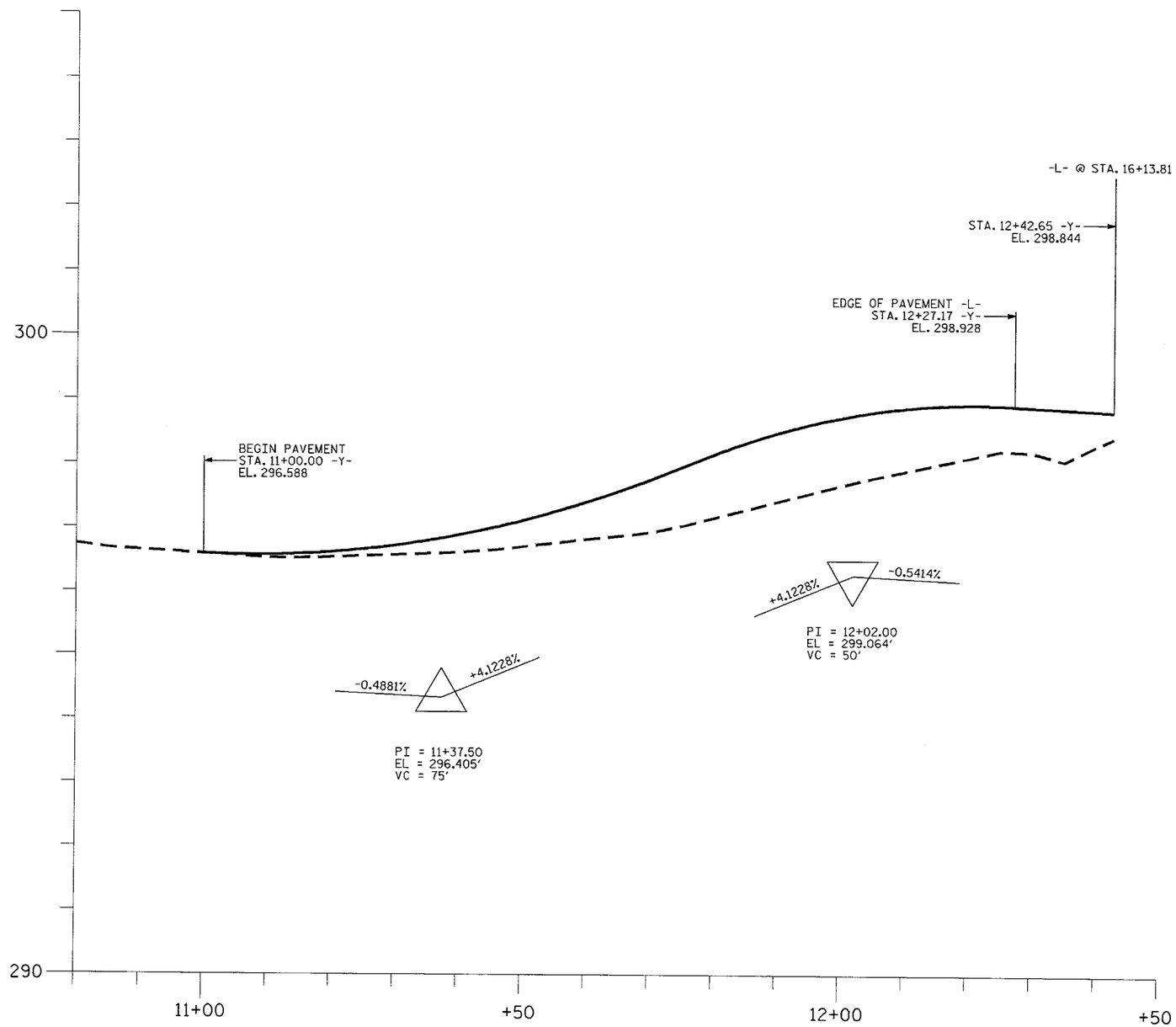

PROJECT NO. 33645
COUNTY: WARREN
STATION: 14+98.00
REPLACES BRIDGE NO. 107

STATE OF NORTH CAROLINA
DEPARTMENT OF TRANSPORTATION
RALEIGH

PROFILE
ALONG -Y- LINE

REVISIONS						SHEET NO.
NO.	BY	DATE	NO.	BY	DATE	5
1			3			TOTAL SHEETS
2			4			25

DRAWN BY: MTP DATE: 10/07
CHECKED BY: PB/AA DATE: 08/10

rtwelsz AT BGMU240329 18-AUG-2010 12:13

B-4308

WARREN

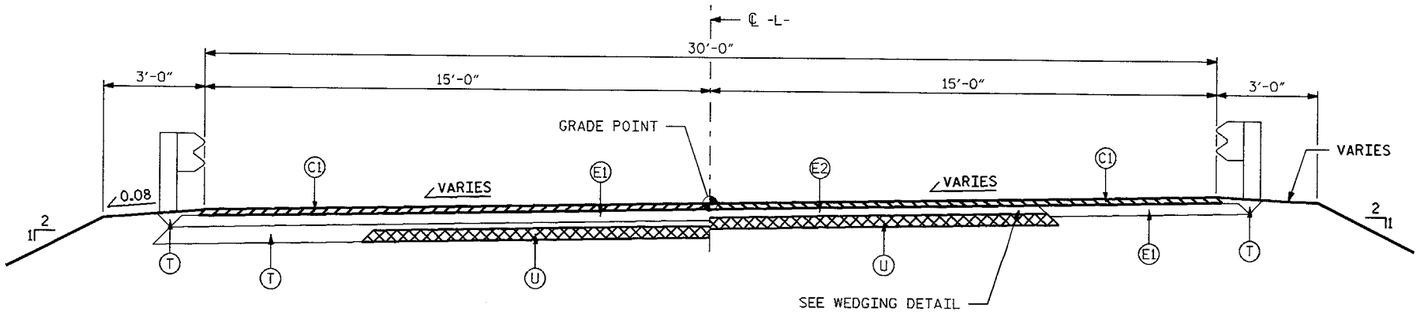

HALF SECTION
USE WHEN PROP. GRADE ELEVATIONS ARE 8" OR MORE ABOVE THE EXISTING GRADE.

HALF SECTION
USE WHEN PROP. GRADE ELEVATIONS ARE LESS THAN 8" ABOVE THE EXISTING GRADE.

-L- STA. 14+55.99 TO STA. 16+64.31

TAPER TO EXISTING WIDTH STA. 13+25.00

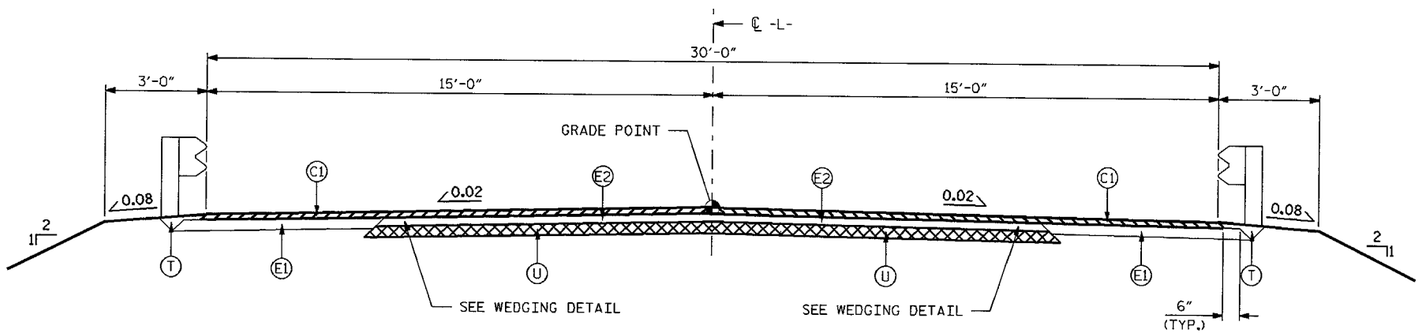

-L- STA. 16+64.31 TO STA. 17+00.00

TAPER TO EXISTING WIDTH STA. 18+00.00

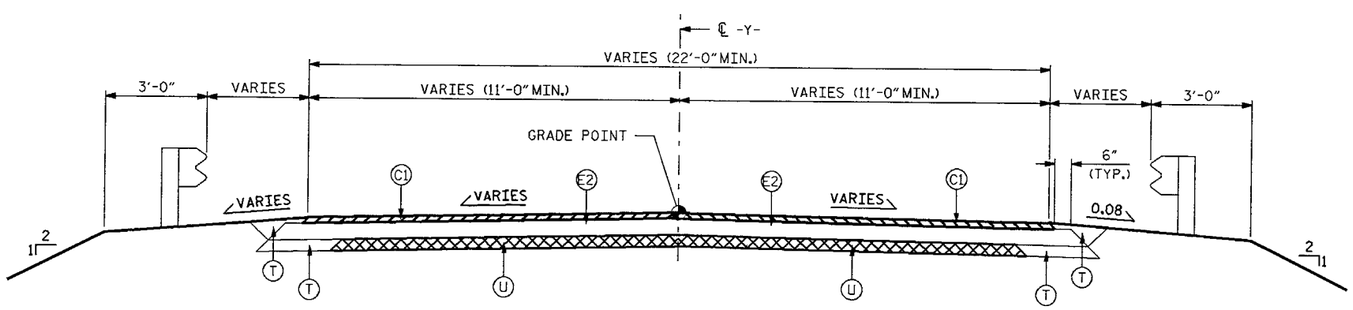

-Y- STA. 11+50.00 TO STA. 12+27.12

TAPER TO EXISTING WIDTH STA. 11+00.00

NOTES

1. PAVEMENT EDGE SLOPES ARE 1:1 UNLESS SHOWN OTHERWISE.
2. FOR METHOD OF SHOULDER CONSTRUCTION, SEE STD. DWG. 560.01.

C1	PROP. APPROX. 2" MIN. ASPHALT CONCRETE SURFACE COURSE, TYPE SF9.5A, AT AN AVERAGE RATE OF 110 LBS. PER SQ. YD. PER 1" DEPTH IN EACH OF THE TWO LAYERS.
C2	PROP. VARIABLE DEPTH ASPHALT CONCRETE SURFACE COURSE, TYPE SF9.5A, AT AN AVERAGE RATE OF 110 LBS. PER SQ. YD. PER 1" DEPTH. TO BE PLACED IN LAYERS NOT LESS THAN 1" IN DEPTH OR GREATER THAN 3" IN DEPTH.
E1	PROP. APPROX. 4" ASPHALT CONCRETE BASE COURSE, TYPE B25.0B, AT AN AVERAGE RATE OF 114 LBS. PER SQ. YD.
E2	PROP. VARIABLE DEPTH ASPHALT CONCRETE BASE COURSE, TYPE B25.0B, AT AN AVERAGE RATE OF 114 LBS. PER SQ. YD. PER 1" DEPTH. TO BE PLACED IN LAYERS NOT LESS THAN 3" IN DEPTH OR GREATER THAN 6" IN DEPTH.
T	EARTH MATERIAL.
U	EXISTING PAVEMENT.

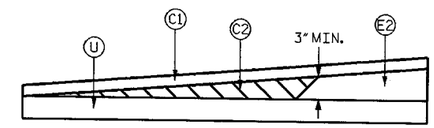

WEDGING DETAIL FOR RESURFACING

PROJECT NO. 33645
COUNTY: WARREN
STATION: 14+98.00
REPLACES BRIDGE NO. 107

STATE OF NORTH CAROLINA
DEPARTMENT OF TRANSPORTATION
RALEIGH

TYPICAL ROADWAY SECTIONS

REVISIONS						SHEET NO.
NO.	BY	DATE	NO.	BY	DATE	6
1			3			TOTAL SHEETS
2			4			25

DRAWN BY: MTP DATE: 01/08
CHECKED BY: PB/AA DATE: 08/10

rrwelsz AT BGMU240329 18-AUG-2010 13:15

33645.1.1

WARREN

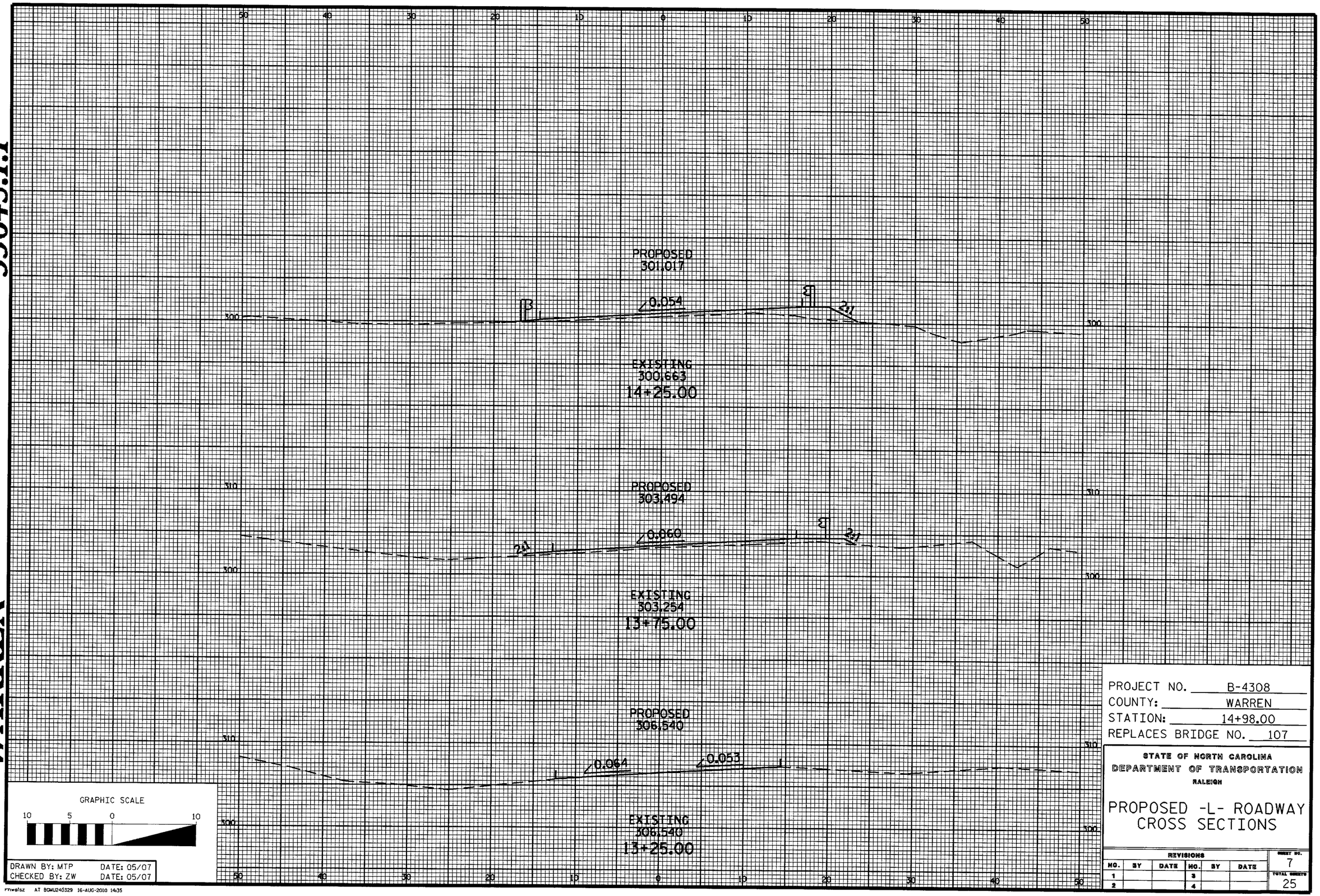

PROJECT NO. B-4308
COUNTY: WARREN
STATION: 14+98.00
REPLACES BRIDGE NO. 107

STATE OF NORTH CAROLINA
DEPARTMENT OF TRANSPORTATION
RALEIGH

PROPOSED -L- ROADWAY
CROSS SECTIONS

REVISIONS						SHEET NO.
NO.	BY	DATE	NO.	BY	DATE	7
1			3			TOTAL SHEETS
2			4			25

rhwelsz AT BGMU240329 16-AUG-2010 14:35

33645.1.1

WARREN

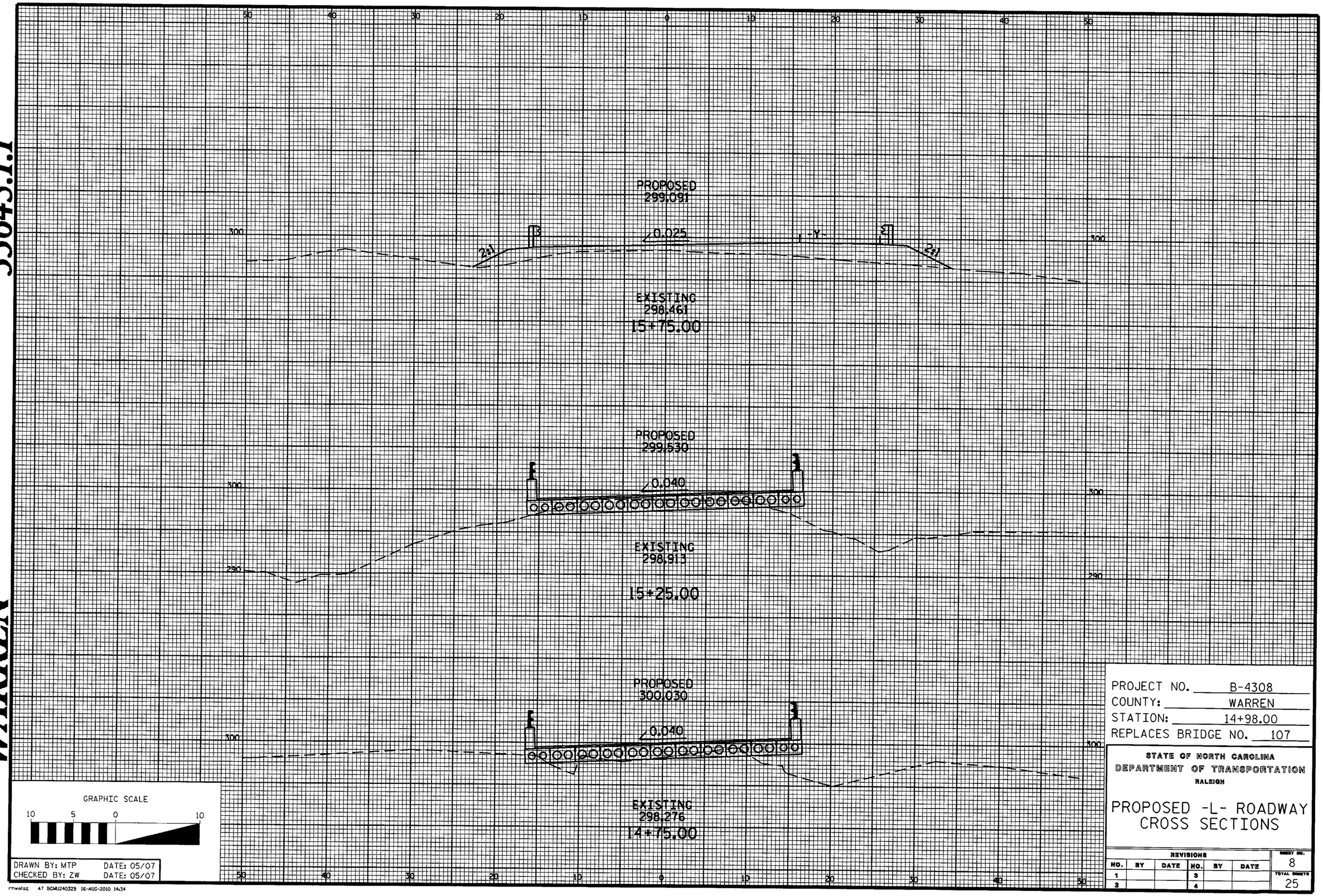

DRAWN BY: MTP DATE: 05/07
CHECKED BY: ZW DATE: 05/07

rnwelsz AT BGMJ240329 16-AUG-2010 14:34

PROJECT NO. B-4308
COUNTY: WARREN
STATION: 14+98.00
REPLACES BRIDGE NO. 107

STATE OF NORTH CAROLINA
DEPARTMENT OF TRANSPORTATION
RALEIGH

PROPOSED -L- ROADWAY
CROSS SECTIONS

REVISIONS						SHEET NO.
NO.	BY	DATE	NO.	BY	DATE	8
1			3			TOTAL SHEETS
2			4			25

33645.1.1

WARREN

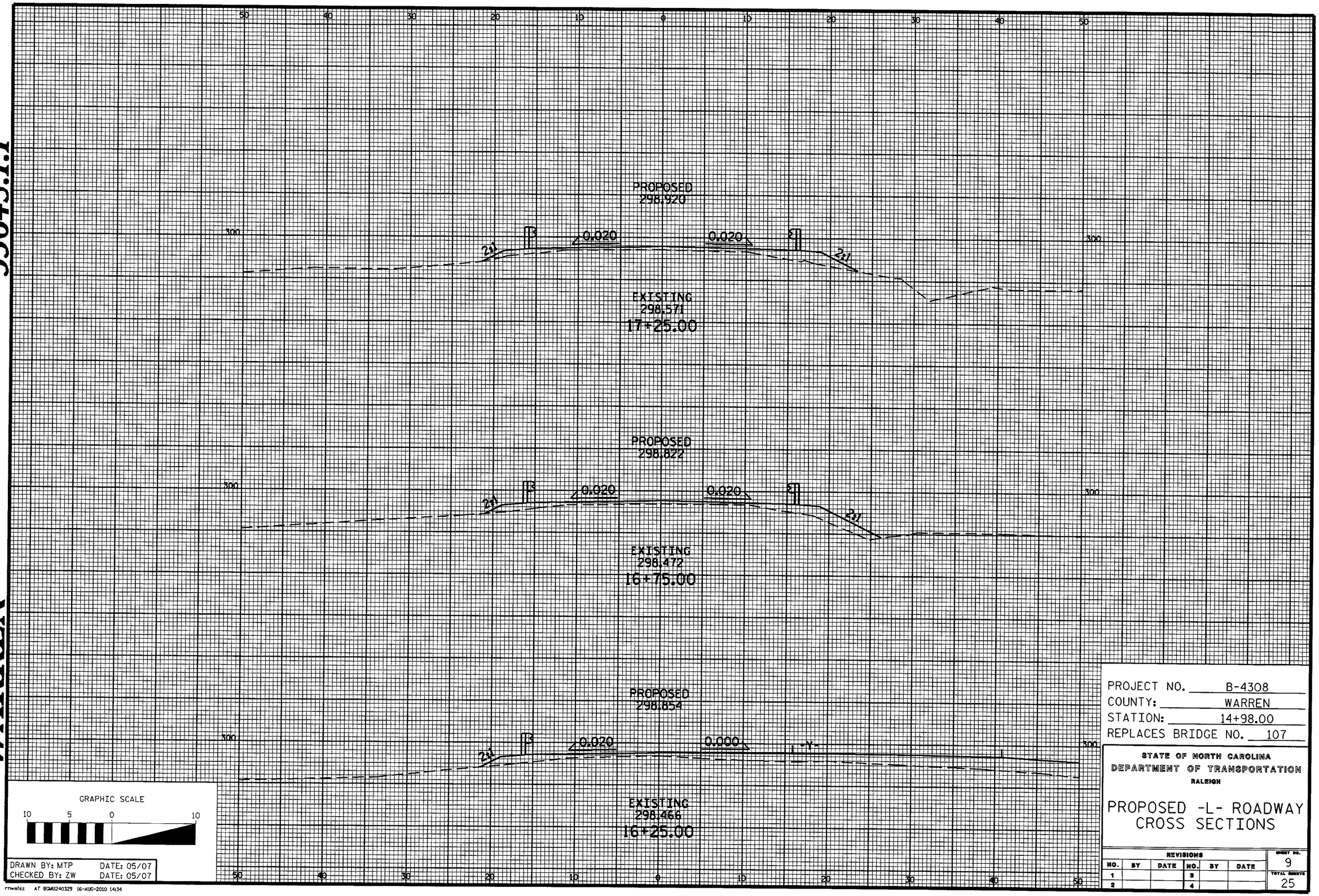

DRAWN BY: MTP DATE: 05/07
CHECKED BY: ZW DATE: 05/07

rnwelsz AT BGMU240329 16-AUG-2010 14:34

PROJECT NO. B-4308
COUNTY: WARREN
STATION: 14+98.00
REPLACES BRIDGE NO. 107

STATE OF NORTH CAROLINA
DEPARTMENT OF TRANSPORTATION
RALEIGH

PROPOSED -L- ROADWAY
CROSS SECTIONS

REVISIONS						SHEET NO.
NO.	BY	DATE	NO.	BY	DATE	9
1			3			TOTAL SHEETS
2			4			25

33645.1.1

WARREN

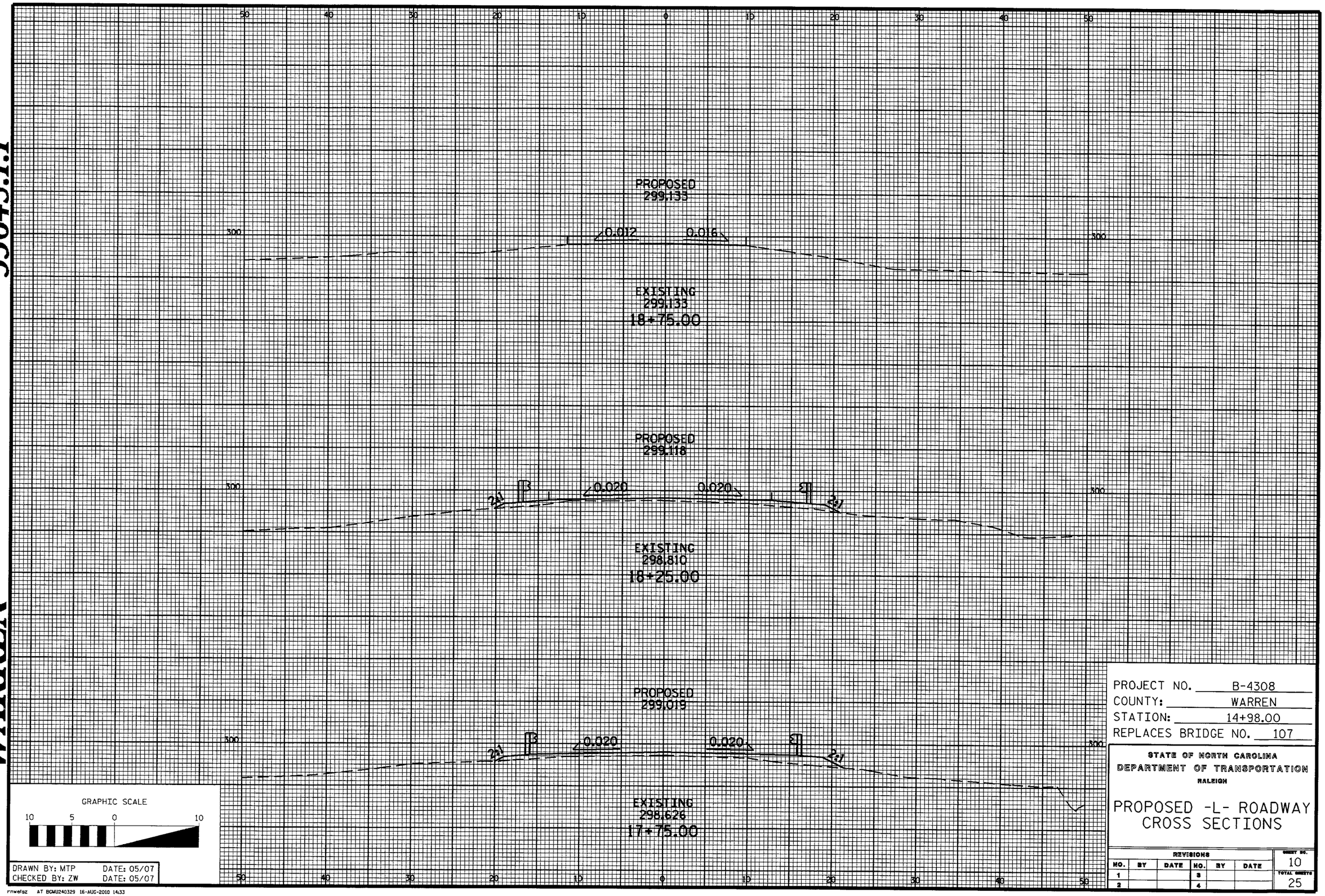

DRAWN BY: MTP DATE: 05/07
CHECKED BY: ZW DATE: 05/07

PROJECT NO. B-4308
COUNTY: WARREN
STATION: 14+98.00
REPLACES BRIDGE NO. 107

STATE OF NORTH CAROLINA
DEPARTMENT OF TRANSPORTATION
RALEIGH

PROPOSED -L- ROADWAY
CROSS SECTIONS

REVISIONS						SHEET NO.
NO.	BY	DATE	NO.	BY	DATE	10
1			3			TOTAL SHEETS
2			4			25

rnwefsz AT BGMU240329 16-AUG-2010 14:33

33645.1.1

WARREN

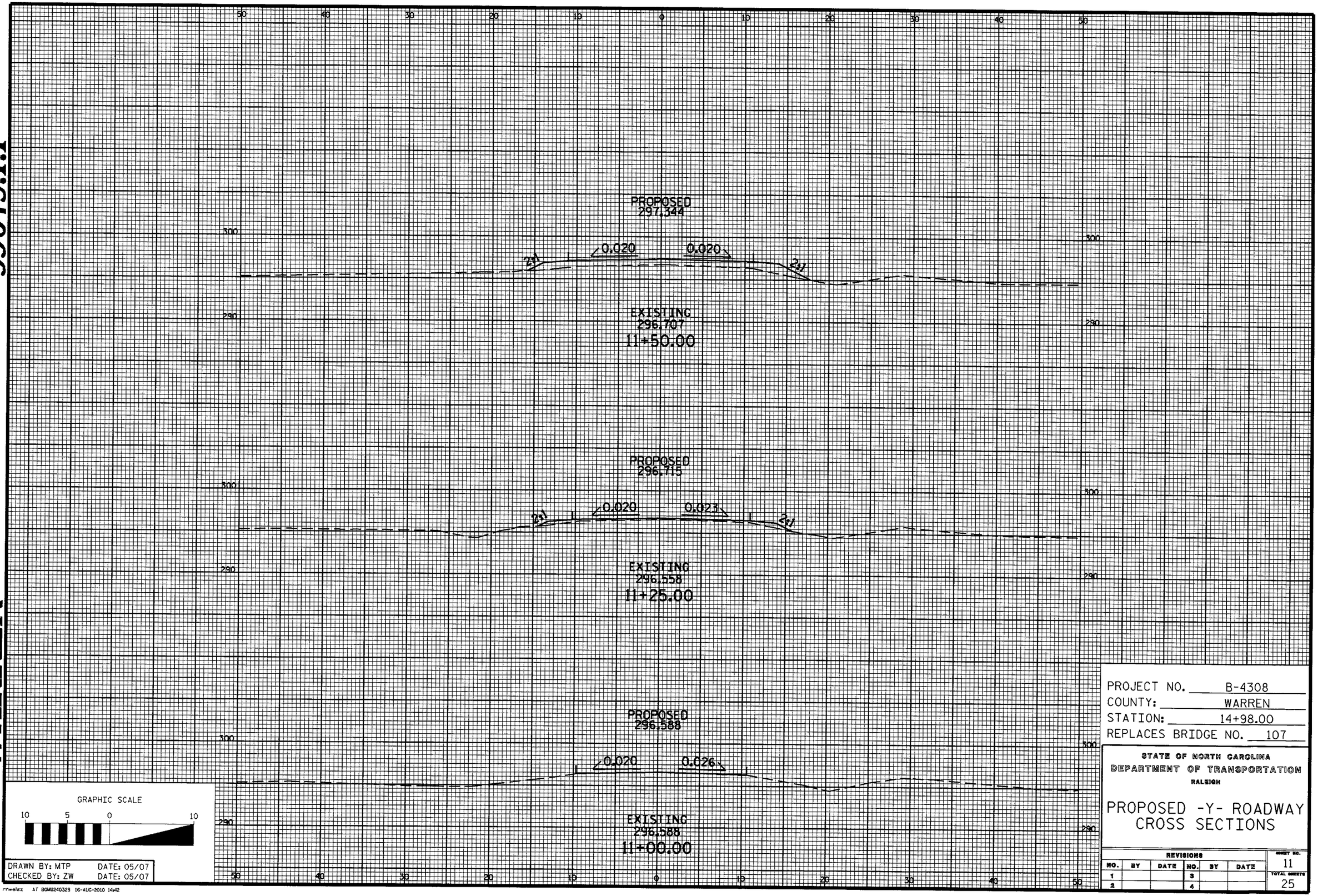

DRAWN BY: MTP DATE: 05/07
CHECKED BY: ZW DATE: 05/07

PROJECT NO. B-4308
COUNTY: WARREN
STATION: 14+98.00
REPLACES BRIDGE NO. 107

STATE OF NORTH CAROLINA
DEPARTMENT OF TRANSPORTATION
RALEIGH

PROPOSED -Y- ROADWAY
CROSS SECTIONS

REVISIONS						SHEET NO.
NO.	BY	DATE	NO.	BY	DATE	11
1			3			TOTAL SHEETS
2			4			25

rnwelsz AT BGMU240329 16-AUG-2010 14:42

33645.1.1

WARREN

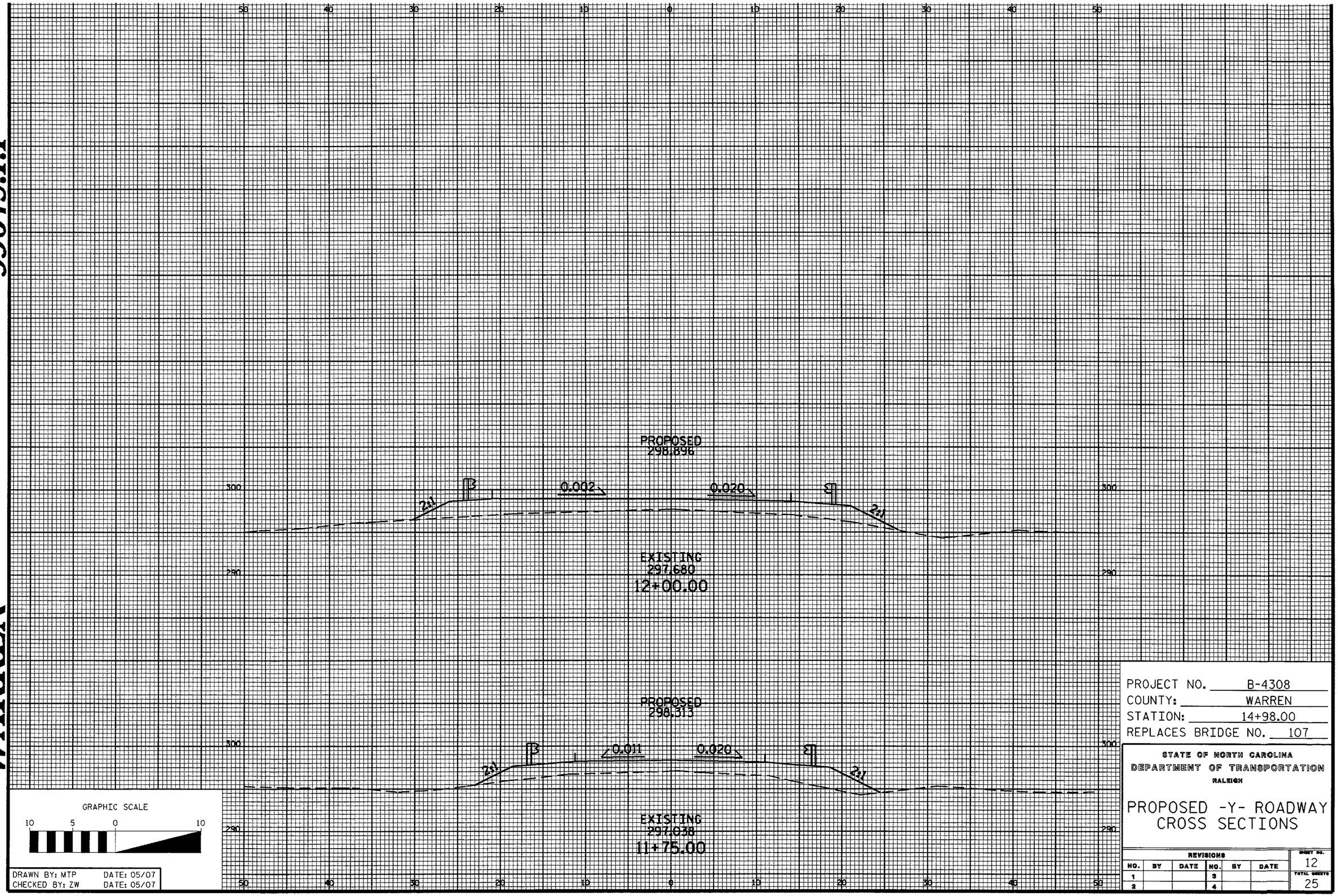

DRAWN BY: MTP DATE: 05/07
CHECKED BY: ZW DATE: 05/07

PROJECT NO. B-4308
COUNTY: WARREN
STATION: 14+98.00
REPLACES BRIDGE NO. 107

STATE OF NORTH CAROLINA
DEPARTMENT OF TRANSPORTATION
RALEIGH

PROPOSED -Y- ROADWAY
CROSS SECTIONS

REVISIONS						SHEET NO.
NO.	BY	DATE	NO.	BY	DATE	12
1			3			TOTAL SHEETS
2			4			25

rmwelsz AT BGMU240329 16-AUG-2010 14:43

33645.1.1

WARREN

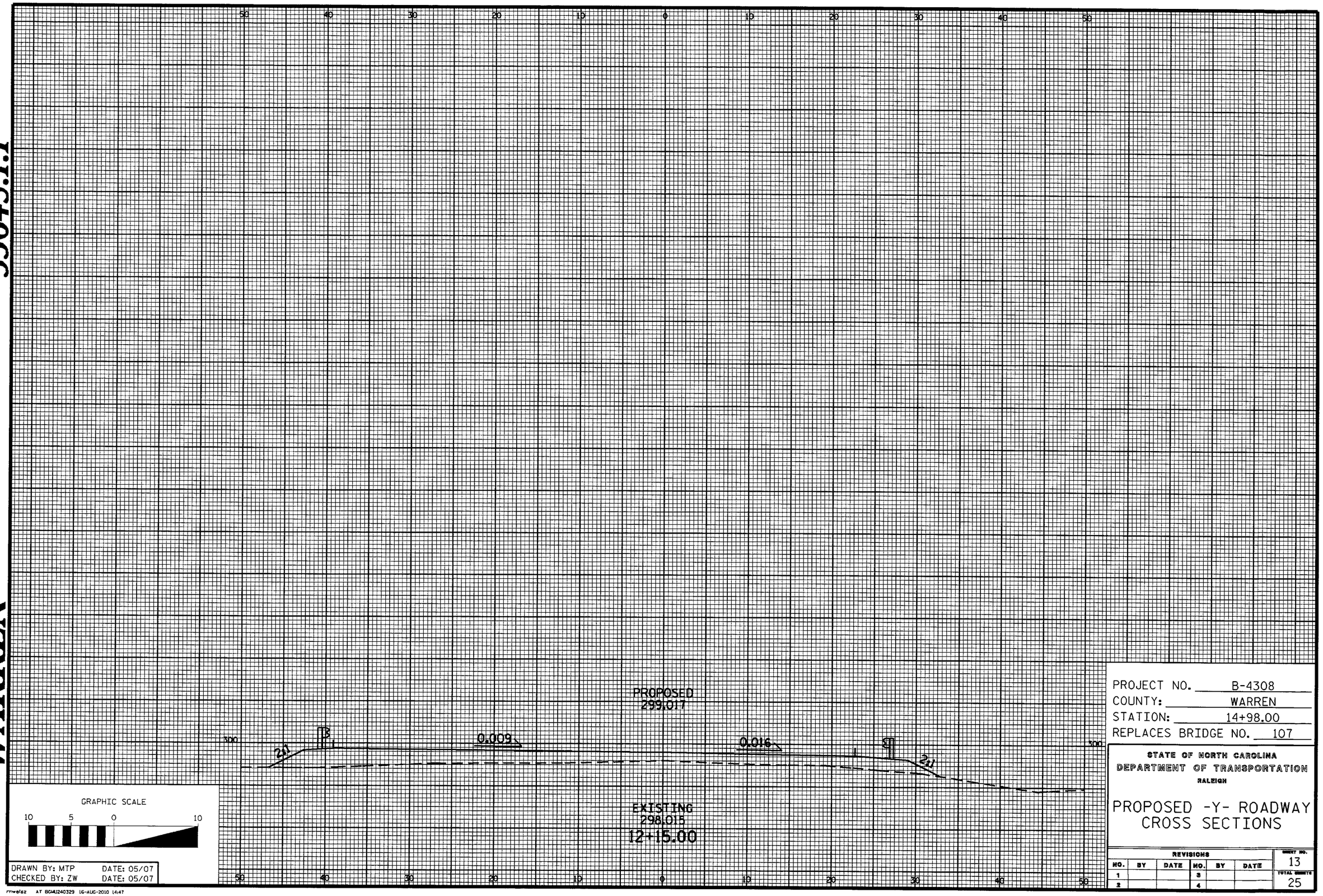

DRAWN BY: MTP DATE: 05/07
CHECKED BY: ZW DATE: 05/07

PROJECT NO. B-4308
COUNTY: WARREN
STATION: 14+98.00
REPLACES BRIDGE NO. 107

STATE OF NORTH CAROLINA
DEPARTMENT OF TRANSPORTATION
RALEIGH

PROPOSED -Y- ROADWAY
CROSS SECTIONS

REVISIONS						SHEET NO.
NO.	BY	DATE	NO.	BY	DATE	13
1			3			TOTAL SHEETS
2			4			25

rrwe6sz AT BGMU240329 16-AUG-2010 14:47

B-4308

WARREN

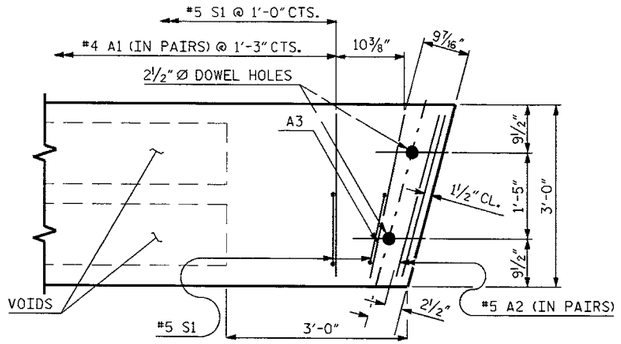

PART PLAN - SLAB SECTION

NOTE: EXTERIOR SLAB SECTION SHOWN-INTERIOR SECTION SIMILAR EXCEPT OMIT S1 BARS

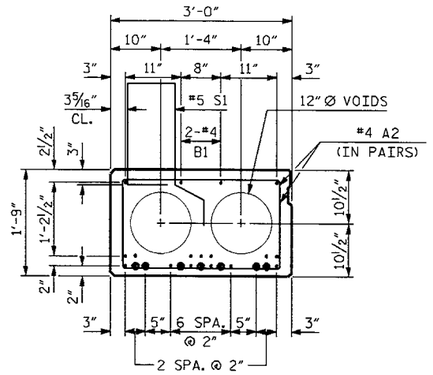

60' SPAN

22 - 0.6" Ø H.S. STRANDS
EXTERIOR SLAB SECTION
FINAL DEFLECTION 3.037" (UP)

● DENOTES SHEATHED STRAND (SEE SHEATH CHART)

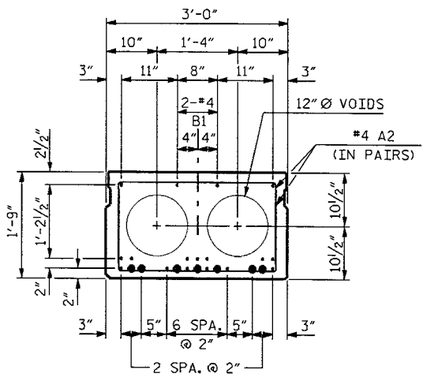

60' SPAN

22 - 0.6" Ø H.S. STRANDS
INTERIOR SLAB SECTION
FINAL DEFLECTION 3.037" (UP)

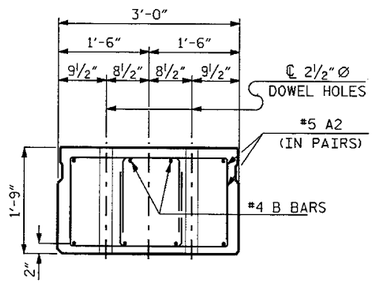

SLAB END ELEVATION

THE 2 1/2" Ø DOWEL HOLES SHOULD BE FILLED WITH GROUT, SEE SPECIAL PROVISIONS

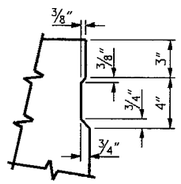

SHEAR KEY DETAIL

SHEATH CHART		
SPAN LENGTH, EXT./INT. SLAB	NUMBER OF SHEATHED STRANDS	SHEATH LENGTH FROM SLAB END
60', EXT.	7	6'-3"
60', INT.	7	6'-3"

NOTES

1. ASSUMED LIVE LOAD = HS 20 OR ALTERNATE LOADING, EXCEPT THAT THE BEAMS HAVE BEEN DESIGNED FOR HS-25.
2. CONCRETE:
   60' SPAN:
   f'c = 7000 psi (MINIMUM COMPRESSIVE STRENGTH @ 28 DAYS)
   f'ci = 5600 psi (MINIMUM COMPRESSIVE STRENGTH @ TRANSFER OF STRESSING FORCE)
3. ALL PRESTRESS STRANDS SHALL MEET THE REQUIREMENTS OF AASHTO M203.
4. ALL PRESTRESS STRANDS SHALL BE 7 WIRE, LOW RELAXATION, GRADE 270 CABLES IN ACCORDANCE WITH THE SPECIFICATIONS. DETAILS (PER CABLE):

SIZE	TYPE	AREA	ULTIMATE STR.	APPLILED FORCE
0.6" Ø	L.R.	0.217"	58,600#	43,950#

5. STRUCTURAL STEEL ITEMS SHALL BE OF A GRADE CONFORMING TO EITHER ASTM A36 OR A373, EXCEPT HIGH STRENGTH BOLTS. HIGH STRENGTH BOLTS SHALL BE ASTM A325. ALL STRUCTURAL STEEL EXCEPT PILE CAP PLATES SHALL BE GALVANIZED AS PER THE SPECIFICATIONS. SEE "2 BAR METAL RAIL" SHEET FOR NOTES ON STEEL USED IN METAL RAILING.
6. ALL MATERIAL AND WORKMANSHIP SHALL COMPLY WITH THE APPLICABLE REQUIREMENTS OF THE STANDARD SPECIFICATIONS FOR ROADS AND STRUCTURES OF THE NC DEPARTMENT OF TRANSPORTATION DATED JULY 2006 AND THE SPECIAL PROVISIONS.
7. A POSITIVE HOLD DOWN SYSTEM MUST BE EMPLOYED TO PREVENT VOIDS FROM RISING OR MOVING SIDEWAYS.
8. UNLESS OTHERWISE NOTED ON PLANS, ALL EXPOSED CORNERS ON STRUCTURES SHALL BE CAMFERED 3/4".
9. EPOXY PROTECTIVE COATING SHALL BE APPLIED TO ENDS OF CORED SLABS.
10. ALL REINFORCING STEEL CAST WITH THE CORED SLAB SECTIONS SHALL BE GRADE 60 AND SHALL BE INCLUDED IN THE UNIT PRICE BID FOR PRESTRESSED CONCRETE CORED SLABS.
11. RECESSES FOR TRANSVERSE STRANDS SHALL BE GROUTED AFTER THE TENSIONING OF THE STRANDS.
12. THE 2 1/2" Ø DOWEL HOLES AT FIXED ENDS OF SLAB SECTIONS SHALL BE FILLED WITH GROUT. THE 2 1/2" Ø DOWEL HOLES AT EXPANSION ENDS OF SLAB SECTIONS SHALL BE FILLED WITH JOINT SEALER MATERIAL TO 1 1/2" ABOVE THE TOP OF DOWELS AND THEN FILLED WITH GROUT.
13. ALL REINFORCING STEEL IN BARRIER RAILS SHALL BE EPOXY COATED.
14. PRESTRESSING STRANDS SHALL BE CUT FLUSH WITH THE CORED SLAB UNIT
15. TRANSVERSE POST TENSIONING OF THE CORED SLAB UNITS SHALL BE DONE IN ACCORDANCE WITH THE STANDARD SPECIFICATIONS, EXCEPT THAT THE STRANDS SHALL BE 0.6" Ø AND TENSIONED TO 43,950 POUNDS.

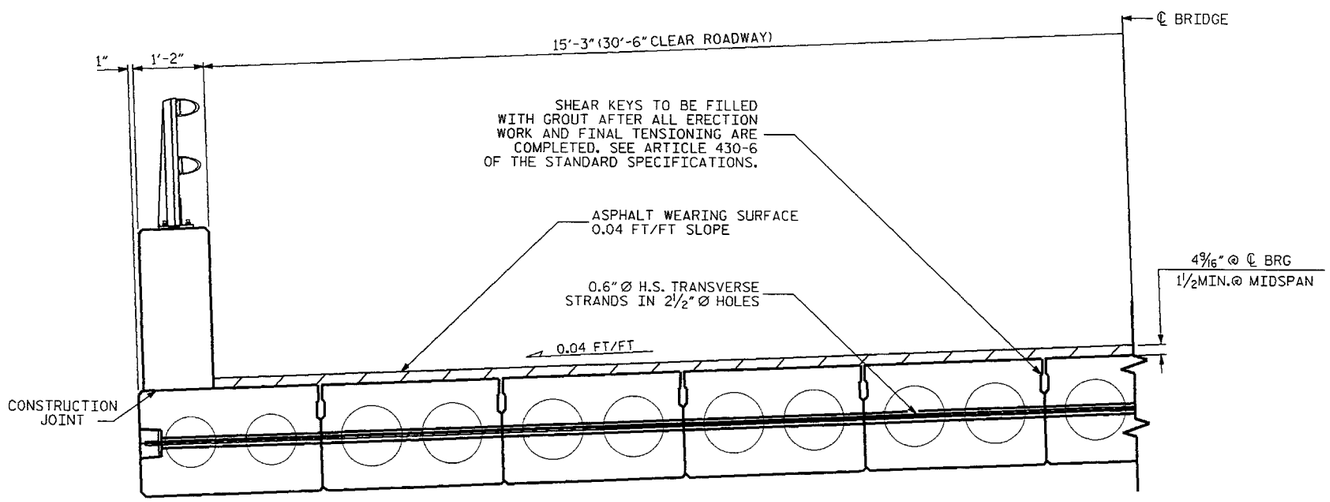

TYPICAL HALF SECTION

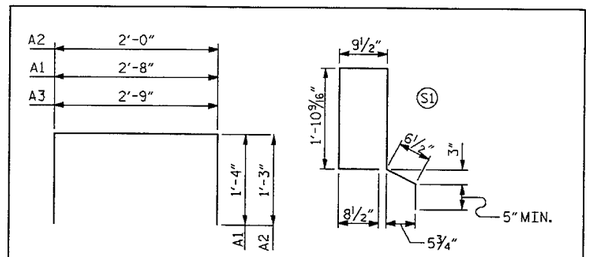

REINFORCING BAR TYPES

BAR DIMENSIONS ARE OUT TO OUT
S1 BAR SHALL BE EPOXY COATED

PROJECT NO. 33645.1.1
COUNTY: WARREN
STATION: 14+98.00
REPLACES BRIDGE NO. 107

STATE OF NORTH CAROLINA
DEPARTMENT OF TRANSPORTATION
RALEIGH

CORED SLAB & SECTION DETAILS

REVISIONS						
NO.	BY	DATE	NO.	BY	DATE	
1			3			
2			4			

SHEET NO. 14
TOTAL SHEETS 25

DRAWN BY: MTP DATE: 01/08
CHECKED BY: AA DATE: 08/10

rnwelsz AT BGMU240329 19-AUG-2010 13:12

B-4308

WARREN

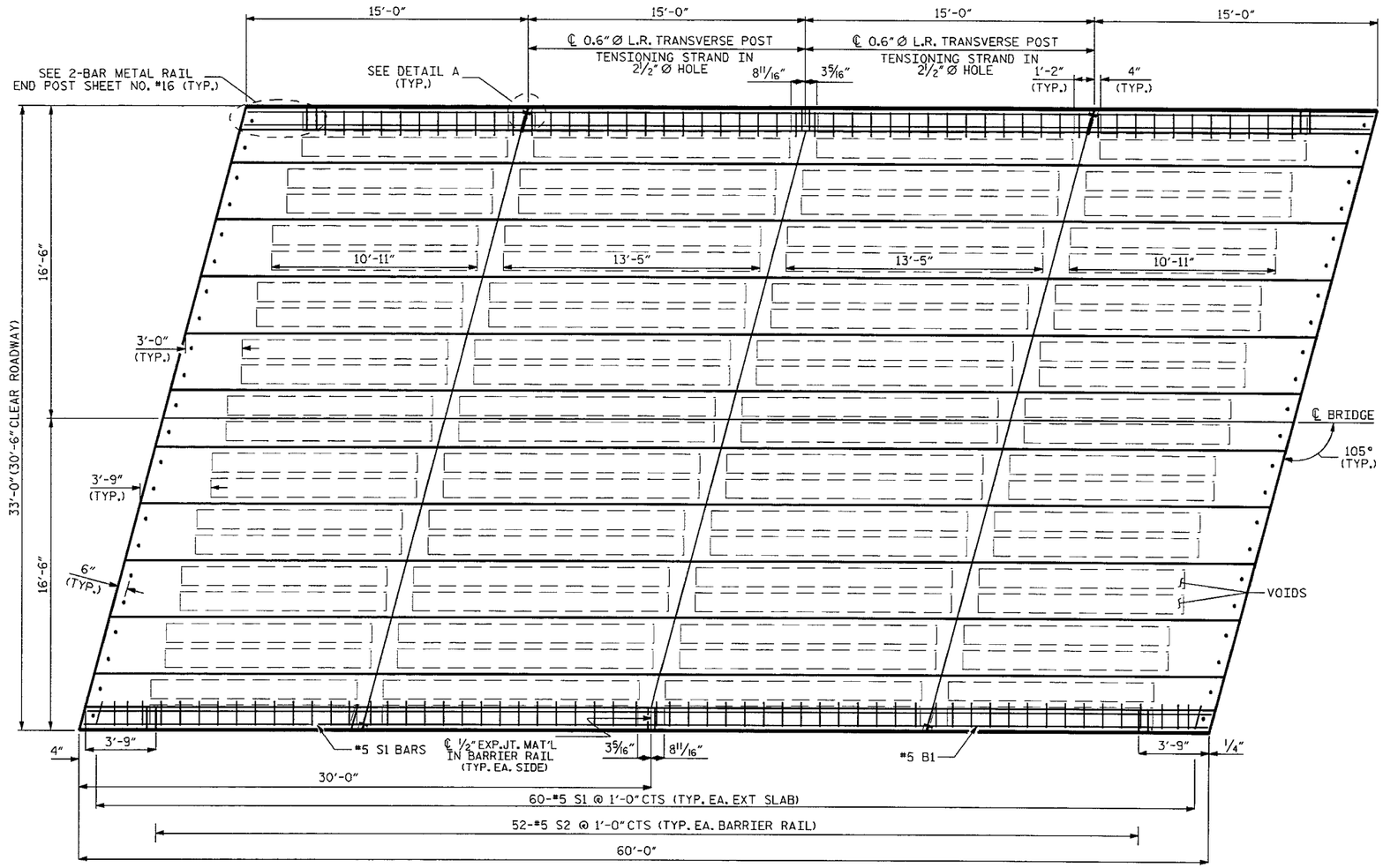

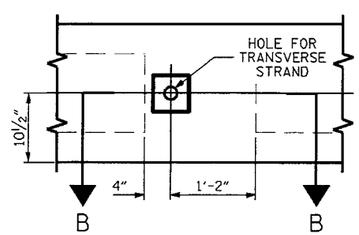

ELEVATION

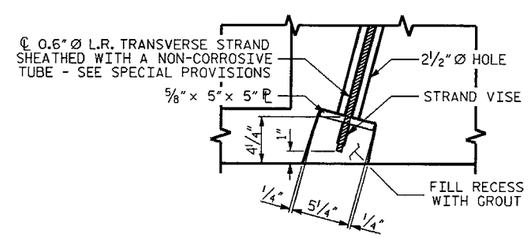

SECTION B-B

DETAIL -A-

NOT TO SCALE

PROJECT NO. 33645
COUNTY: WARREN
STATION: 14+98.00
REPLACES BRIDGE NO. 107

STATE OF NORTH CAROLINA
DEPARTMENT OF TRANSPORTATION
RALEIGH

PLAN OF SPAN
105° SKEW
30'-6" CL. ROADWAY

REVISIONS						SHEET NO.
NO.	BY	DATE	NO.	BY	DATE	15
1			3			TOTAL SHEETS
2			4			25

DRAWN BY: MTP DATE: 01/08
CHECKED BY: AA DATE: 08/10

rnwelsz AT BGMU240329 19-AUG-2010 13:26

B-4308

WARREN

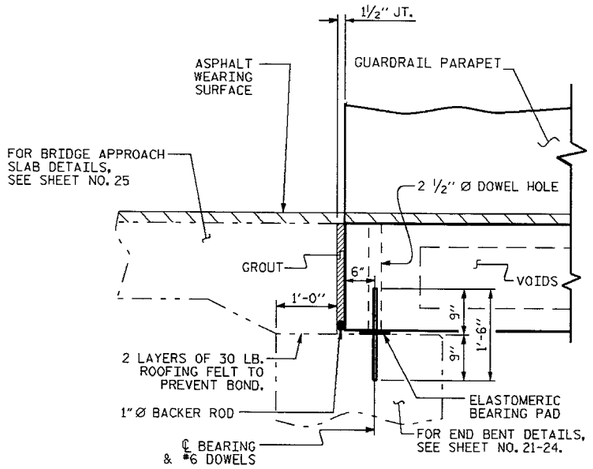

SECTION AT END BENT

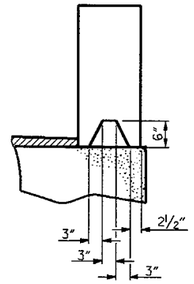

SECTION S-S

AT DAM IN OPEN JOINT
(THIS IS TO BE USED ONLY WHEN SLIP FORM IS USED)

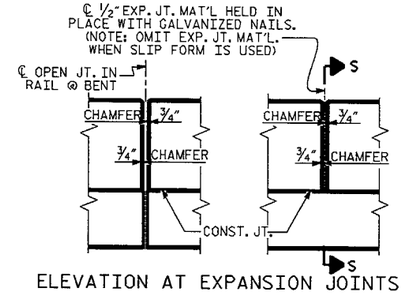

ELEVATION AT EXPANSION JOINTS

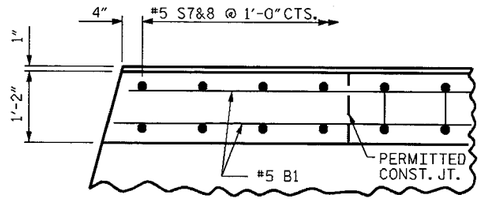

PLAN OF PARAPET

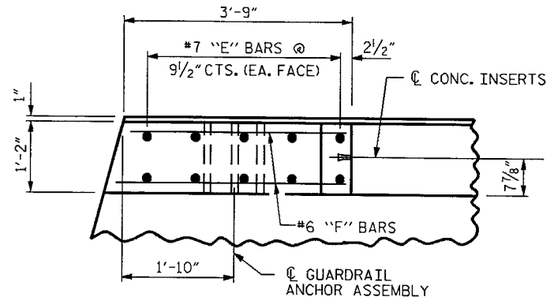

PLAN OF END POST

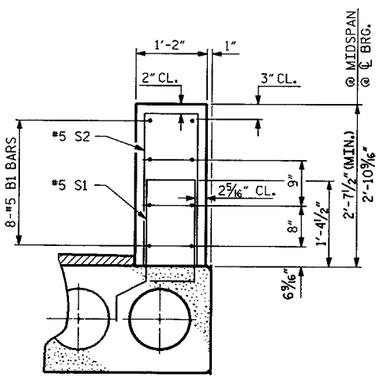

TWO BAR METAL RAIL PARAPET SECTION

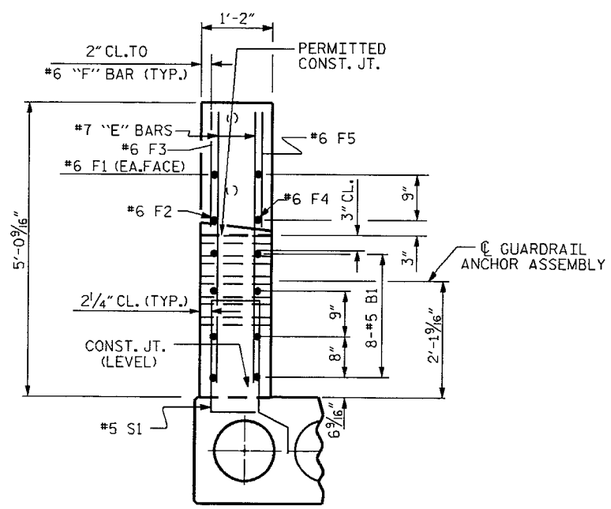

END VIEW

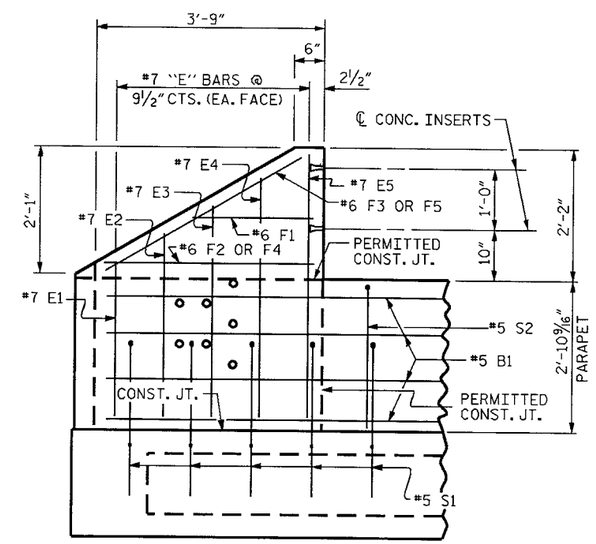

ELEVATION

PARAPET AND END POST FOR TWO BAR RAIL

BAR TYPES

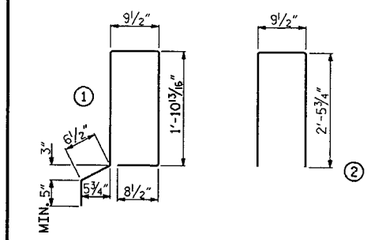

BILL OF MATERIAL FOR PARAPET & 4 END POSTS

BAR	NO.	SIZE	TYPE	LENGTH	WEIGHT
*B1	32	# 5	STR	29'-5"	982
*E1	8	# 7	STR	2'-10"	46
*E2	8	# 7	STR	3'-4"	55
*E3	8	# 7	STR	3'-10"	63
*E4	8	# 7	STR	4'-4"	71
*E5	8	# 7	STR	4'-8"	76
*F1	8	# 6	STR	2'-0"	24
*F2	4	# 6	STR	3'-5"	21
*F3	4	# 6	STR	3'-8"	22
*F4	4	# 6	STR	3'-5"	21
*F5	4	# 6	STR	3'-8"	22
*S1	120	# 5	1	6'-3"	782
*S2	104	# 5	2	5'-9"	624
*EPOXY COATED REINFORCING STEEL				LBS.	2809
CLASS AA CONCRETE				CU.YDS.	15.8
TOTAL LIN. FT. OF CONCRETE PARAPET					120.00

PROJECT NO. 33645
COUNTY: WARREN
STATION: 14+98.00
REPLACES BRIDGE NO. 107

STATE OF NORTH CAROLINA
DEPARTMENT OF TRANSPORTATION
RALEIGH

SUBSTRUCTURE GUARDRAIL PARAPET & END POST DETAILS

REVISIONS						SHEET NO.
NO.	BY	DATE	NO.	BY	DATE	16
1			3			TOTAL SHEETS
2			4			25

DRAWN BY: MTP/RW DATE: 01/08
CHECKED BY: AA DATE: 08/10

rnwelsz AT BGMJ240329 19-AUG-2010 14:59

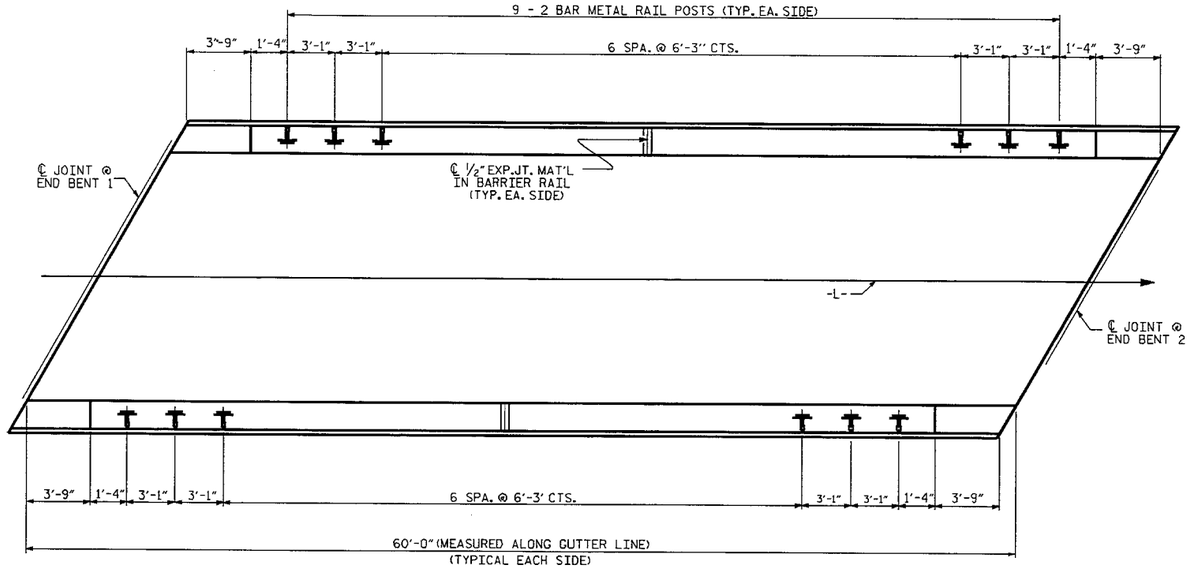

PLAN OF RAIL POST SPACINGS

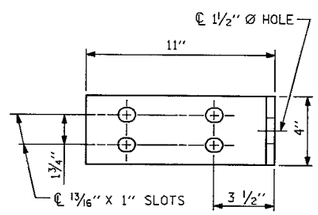

ELEVATION

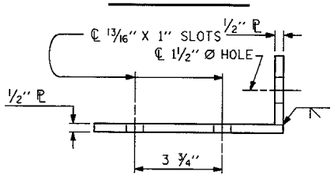

TOP VIEW

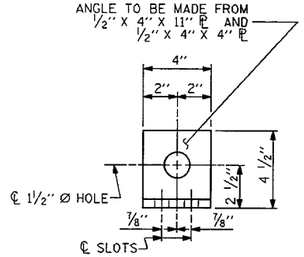

END VIEW (FIX AND EXP.)

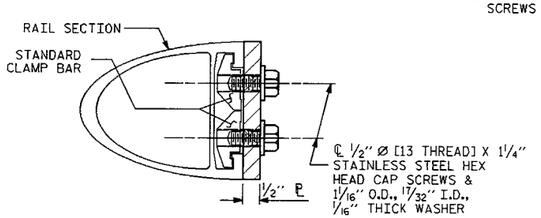

SECTION H-H (FIX)

FIXED

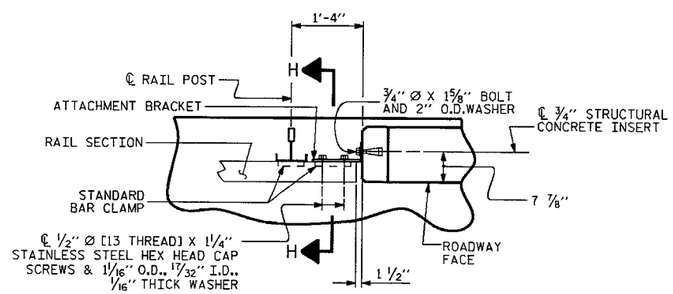

PLAN - RAIL AND END POST

DETAILS FOR ATTACHING METAL RAIL TO END POST

NOTES

STRUCTURAL CONCRETE INSERT

THE STRUCTURAL CONCRETE INSERT ASSEMBLY SHALL CONSIST OF THE FOLLOWING COMPONENTS:

A. FERRULES SHALL BE MADE FROM STEEL MEETING THE REQUIREMENTS OF AASHTO M169, GRADE 12L14 AND SHALL HAVE A MINIMUM LENGTH OF THREADS OF 1 1/2".

B. 1 - 3/4" Ø X 1 5/8" BOLT WITH WASHER. BOLT SHALL CONFORM TO THE REQUIREMENTS OF ASTM A307. BOLT AND WASHER SHALL BE GALVANIZED. (AT THE CONTRACTOR'S OPTION, STAINLESS STEEL BOLT AND WASHER MAY BE USED AS AN ALTERNATE FOR THE 3/4" Ø X 1 5/8" GALVANIZED BOLT AND WASHER. THEY SHALL CONFORM TO OR EXCEED THE MECHANICAL REQUIREMENTS OF ASTM A307. THE USE OF THIS ALTERNATE SHALL BE APPROVED BY THE ENGINEER.)

C. WIRE STRUT SHOWN IN THE CONCRETE INSERT ASSEMBLY DETAIL IS THE MINIMUM ALLOWABLE SIZE AND SHALL HAVE A MINIMUM TENSILE STRENGTH OF 100,000 PSI. AS AN OPTION, A 7/16" Ø WIRE STRUT WITH A MINIMUM TENSILE STRENGTH OF 90,000 PSI IS ACCEPTABLE.

NOTES

METAL RAIL TO END POST CONNECTION

THE METAL RAIL TO END POST CONNECTION SHALL CONSIST OF THE FOLLOWING COMPONENTS:

A. 1/2" PLATES SHALL CONFORM TO AASHTO M270 GRADE 36 AND SHALL BE GALVANIZED AFTER FABRICATION.

B. 3/4" STRUCTURAL CONCRETE INSERT SHALL HAVE A WORKING LOAD SHEAR CAPACITY OF 4800 LBS. THE FERRULES SHALL ENGAGE A 3/4"Ø X 1 5/8" BOLT WITH 2" O.D. WASHER IN PLACE. THE 3/4"Ø X 1 5/8" BOLT SHALL HAVE N. C. THREADS.

C. CAP SCREWS FOR RAIL ATTACHMENT TO ANGLE SHALL CONFORM TO THE REQUIREMENTS OF ASTM F593 ALLOY 305 STAINLESS STEEL. CAP SCREWS TO BE CENTERED IN SLOTS AT 60°F.

D. STANDARD CLAMP BARS (SEE METAL RAIL SHEET).

E. 1/2" Ø PIPE SLEEVES (IF REQUIRED) TO BE GALVANIZED.

THE COST OF THE STANDARD CLAMP BARS AND CAP SCREWS USED IN THE METAL RAIL TO END POST CONNECTION SHALL BE INCLUDED IN THE UNIT CONTRACT PRICE BID FOR LINEAR FEET OF 1 OR 2 BAR METAL RAILS.

THE 3/4" STRUCTURAL CONCRETE INSERT WITH BOLT SHALL BE ASSEMBLED IN THE SHOP.

THE COST OF THE 3/4" STRUCTURAL CONCRETE INSERT ASSEMBLY, AND THE 1/2" PLATES COMPLETE IN PLACE SHALL BE INCLUDED IN THE VARIOUS PAY ITEMS.

THE CONTRACTOR, AT HIS OPTION, MAY USE AN ADHESIVE BONDING SYSTEM IN LIEU OF THE STRUCTURAL CONCRETE INSERT EMBEDDED IN THE END POST. IF THE ADHESIVE BONDING SYSTEM IS USED, THE 3/4" Ø X 1 5/8" BOLT WITH WASHER SHALL BE REPLACED WITH A 3/4"Ø X 6 1/2" BOLT AND 2" O.D. WASHER. ALL SPECIFICATIONS THAT APPLY TO THE 3/4" Ø X 1 5/8" BOLT SHALL APPLY TO THE 3/4"Ø X 6 1/2" BOLT. FIELD TESTING OF THE ADHESIVE BONDING SYSTEM IS NOT REQUIRED.

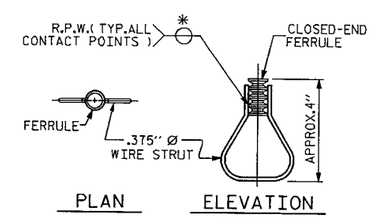

STRUCTURAL CONCRETE INSERT

*EACH WELDED ATTACHMENT OF WIRE TO FERRULE SHALL DEVELOP THE TENSILE STRENGTH OF THE WIRE.

PROJECT NO. B-4308
COUNTY: WARREN
STATION: 14+98.00
REPLACES BRIDGE NO. 107

STATE OF NORTH CAROLINA
DEPARTMENT OF TRANSPORTATION
RALEIGH

STANDARD

RAIL POST SPACINGS AND END OF RAIL DETAILS

FOR ONE OR TWO BAR METAL RAILS

REVISIONS						SHEET NO.
NO.	BY:	DATE:	NO.	BY:	DATE:	17
1			3			TOTAL SHEETS
2			4			25

STD. NO. BMR2

ASSEMBLED BY : R.WEISZ		DATE : 6/10	
CHECKED BY : AA		DATE : 8/10	
DRAWN BY : FCJ 1/88	REV. 10/17/00	LES/RDR	
CHECKED BY : CRK 3/89	REV. 6/7/03	RWW/JTE	
	REV. 5/1/06	TLA/GM	

13-AUG-2010 09:27
$$$$$$$$$$$$$$$$$$$$$$$$DGN$$$$$$$$$$$$$$$$$$$$$$$$
rnweisz AT BGMU240329

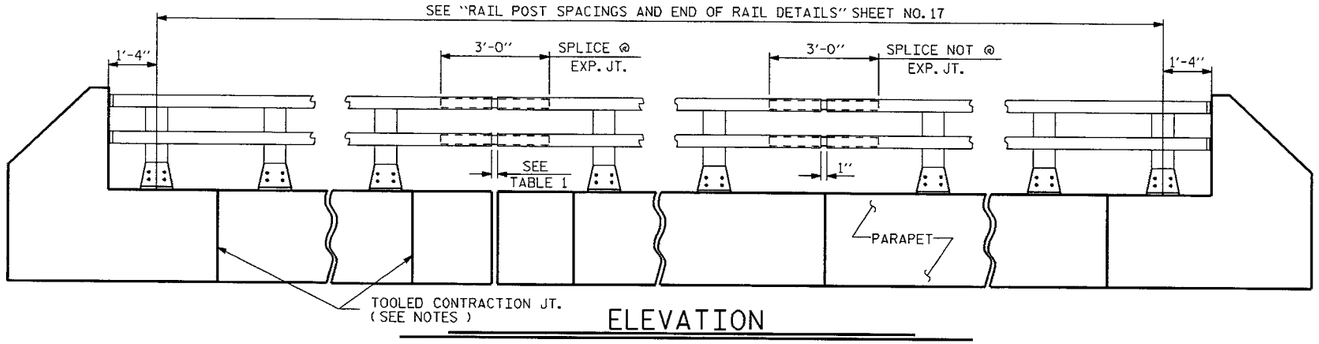

ELEVATION

NOTE : FOR ATTACHMENT OF METAL RAIL TO END POST, SEE STANDARD NO. BMR2.

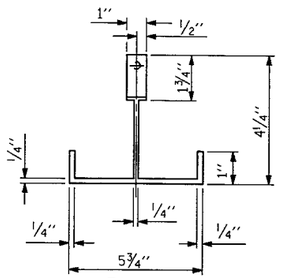

PLAN

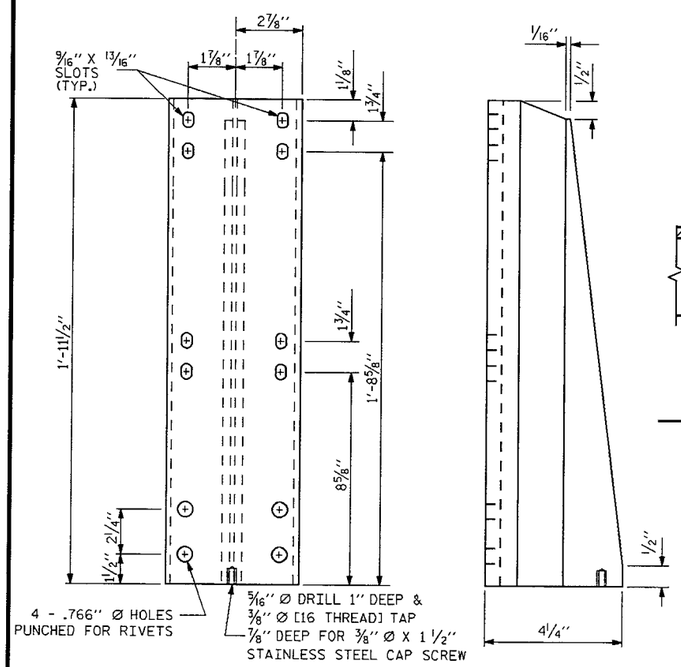

FRONT ELEVATION

SIDE ELEVATION

DETAILS OF POST

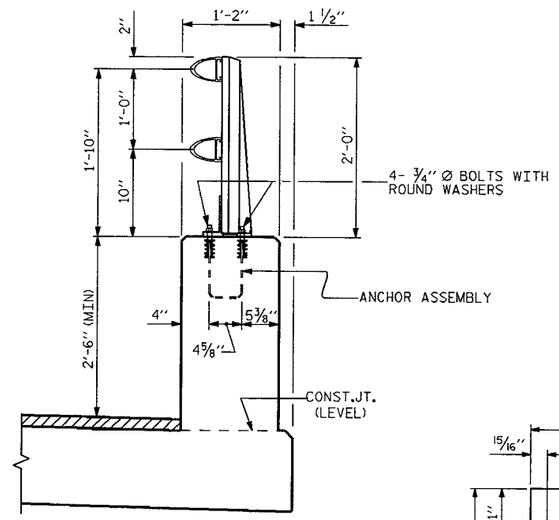

SECTION THRU PARAPET AND RAIL

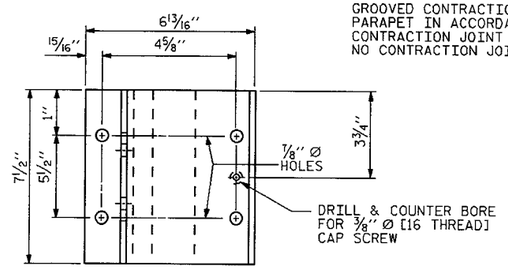

PLAN

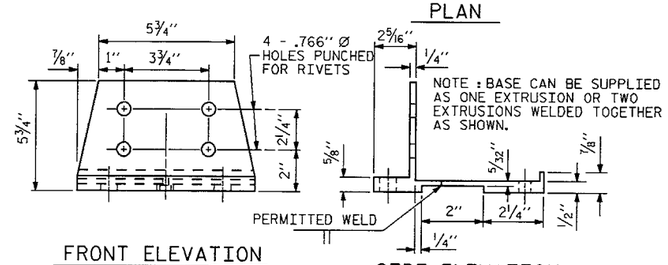

FRONT ELEVATION

SIDE ELEVATION

POST BASE DETAILS

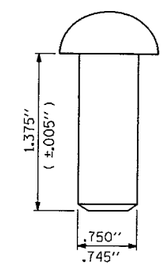

RIVET DETAIL

NOTES

AT THE CONTRACTOR'S OPTION, METAL RAIL MAY BE EITHER ALUMINUM OR GALVANIZED STEEL IN ACCORDANCE WITH THE REQUIREMENTS OF THE GENERAL NOTES AND THE FOLLOWING SPECIFICATIONS FOR THE ALTERNATE MATERIALS; HOWEVER, THE CONTRACTOR WILL BE REQUIRED TO USE THE SAME RAIL MATERIAL ON ALL STRUCTURES ON THE PROJECT FOR WHICH METAL RAIL IS DESIGNATED.

ALUMINUM RAILS

MATERIAL FOR POSTS, BASES AND RAILS, EXPANSION BARS AND CLAMP BARS SHALL BE ASTM B-221 ALLOY 6061-T6.

MATERIAL FOR RIVETS SHALL BE ASTM B316 ALLOY 6061-T6. RIVETS SHALL BE STANDARD BUTTON HEAD AND CONE POINT COLD DRIVEN AS PER DRAWING.

THE BASE OF RAIL POSTS, OR ANY OTHER ALUMINUM SURFACE IN CONTACT WITH CONCRETE SHALL BE THOROUGHLY COATED WITH AN ALUMINUM IMPREGNATED CAULKING COMPOUND OF APPROVED QUALITY.

MATERIAL FOR SHIMS TO BE ASTM B209 ALLOY 6061-T6.

GALVANIZED STEEL RAILS

MATERIAL AND GALVANIZING ARE TO CONFORM TO THE FOLLOWING SPECIFICATIONS:

POST, POST BASES, RAILS, EXPANSION BARS AND CLAMP BARS: AASHTO M270 GRADE 36 STRUCTURAL STEEL - GALVANIZED TO AASHTO M111.

RIVETS: RIVETS SHALL MEET THE REQUIREMENTS OF ASTM A502 FOR GRADE 1 RIVETS.

THE CUT ENDS OF GALVANIZED STEEL RAILING, AFTER GRINDING SMOOTH SHALL BE GIVEN TWO COATS OF ZINC RICH PAINT MEETING THE REQUIREMENTS OF FEDERAL SPECIFICATION MIL-P-26915 USAF TYPE 1, OR OF FEDERAL SPECIFICATIONS TT-P-641.

SHIMS: SHIMS SHALL MEET THE REQUIREMENTS OF ASTM A570 FOR GRADE 33 OR A611 FOR GRADE C AND SHALL BE GALVANIZED IN ACCORDANCE WITH AASHTO M111.

RAIL CAPS: RAIL CAPS SHALL MEET THE REQUIREMENTS OF ASTM A570 FOR GRADE 33 OR A611 FOR GRADE C AND SHALL BE GALVANIZED IN ACCORDANCE WITH AASHTO M111.

GENERAL NOTES

RAILING SHALL BE CONTINUOUS FROM END POST TO END POST OF BRIDGE. EACH JOINT IN RAIL LENGTH SHALL BE SPLICED AS DETAILED. PANEL LENGTHS OF RAIL SHALL BE ATTACHED TO A MINIMUM OF THREE POSTS.

FOR END OF RAIL TO CLEAR FACE OF CONCRETE END POST DIMENSION, SEE STANDARD NO. BMR2.

CAP SCREWS SHALL BE ASTM F593 ALLOY 305 STAINLESS STEEL. WASHERS SHALL MEET THE REQUIREMENTS OF ASTM F844 EXCEPT THEY SHALL BE MADE FROM ALLOY 304 STAINLESS STEEL.

CERTIFIED MILL REPORTS ARE REQUIRED FOR RAILS AND POSTS. SHOP INSPECTION IS NOT REQUIRED.

METAL RAIL POSTS SHALL BE SET NORMAL TO CURB GRADE.

METHOD OF MEASUREMENT FOR METAL RAILS: FOR LENGTH OF METAL RAILS TO BE PAID FOR, SEE THE STANDARD SPECIFICATIONS.

CURVED RAIL USAGE: WHERE RAILS ARE TO BE USED ON BRIDGES ON HORIZONTAL AND/OR VERTICAL CURVATURE THE CONTRACTOR MAY, AT HIS OPTION, HAVE THE REQUIRED CURVATURE IN THE RAIL FORMED IN THE SHOP OR IN THE FIELD. IN EITHER EVENT, THE RAIL SHALL CONFORM WITHOUT BUCKLING OR KINKING TO THE REQUIRED CURVATURE IN A UNIFORM MANNER ACCEPTABLE TO THE ENGINEER.

TO INSURE FUTURE IDENTIFICATION OF THE FABRICATOR, A PERMANENT IDENTIFYING MARK SHALL BE PLACED ON EACH POST. THE METHOD OF MARKING AND LOCATION SHALL BE SUCH THAT IT DOES NOT DETRACT FROM THE APPEARANCE OF THE POST, BUT REMAINS VISIBLE AFTER RAIL PLACEMENT.

SHIMS SHALL BE USED AS NECESSARY FOR POST ALIGNMENT.

ALLOY 6351-T5 MAY BE SUBSTITUTED FOR ALLOY 6061-T6 WHERE APPLICABLE.

MINOR VARIATIONS IN DETAILS OF METAL RAIL WILL BE CONSIDERED. DETAILS OF SUCH VARIATIONS, IF DESIRED, SHALL BE SUBMITTED FOR APPROVAL.

GROOVED CONTRACTION JOINTS, 1/2" IN DEPTH, SHALL BE TOOLED IN ALL EXPOSED FACES OF THE PARAPET IN ACCORDANCE WITH ARTICLE 825-10(B) OF THE STANDARD SPECIFICATIONS. THE CONTRACTION JOINT SHALL BE LOCATED AT A SPACING OF 8FT. TO 10FT. BETWEEN EXPANSION JOINTS. NO CONTRACTION JOINTS WILL BE REQUIRED FOR SEGMENTS LESS THAN 10 FEET IN LENGTH.

PAY LENGTH = 105.5 LIN. FT.

PROJECT NO. B-4308
COUNTY: WARREN
STATION: 14+98.00
REPLACES BRIDGE NO. 107

STATE OF NORTH CAROLINA
DEPARTMENT OF TRANSPORTATION
RALEIGH

STANDARD

2 BAR METAL RAIL

ASSEMBLED BY : RW		DATE : 6/10			
CHECKED BY : AA		DATE : 8/10			
DRAWN BY : EEM 6/94	REV. 10/17/00	LES/RDR			
CHECKED BY : RGW 6/94	REV. 5/7/03R	~~RWW/JTE~~			
	REV. 5/1/06	TLA/GM			

REVISIONS						SHEET NO.
NO.	BY:	DATE:	NO.	BY:	DATE:	18
1			3			TOTAL SHEETS
2			4			25

STD. NO. BMR3

13-AUG-2010 09:28
rnwelsz AT BGMU240329

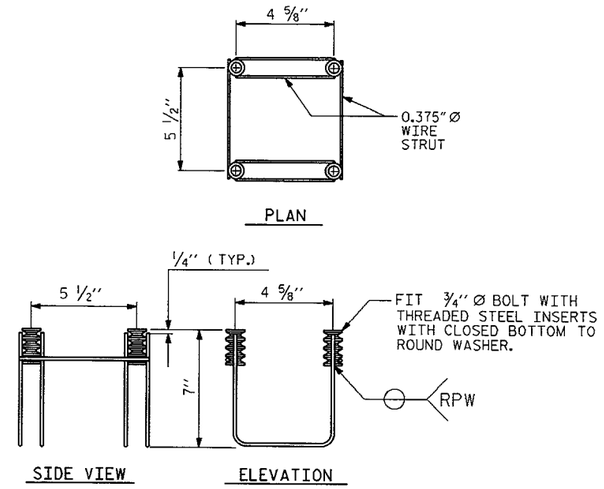

MINIMUM LENGTH OF THREADS IN INSERT (FERRULE): 1 3/4"

4-BOLT METAL RAIL ANCHOR ASSEMBLY

(___ ASSEMBLIES REQUIRED)

NOTES

STRUCTURAL CONCRETE ANCHOR ASSEMBLY

THE STRUCTURAL CONCRETE ANCHOR ASSEMBLY SHALL CONSIST OF THE FOLLOWING COMPONENTS :

A. FERRULES SHALL BE MADE FROM STEEL MEETING THE REQUIREMENTS OF AASHTO M169, GRADE 12L14 AND SHALL HAVE A MINIMUM LENGTH OF THREADS OF 2" FOR 3/4" FERRULES.

B. 4 - 3/4" Ø X 2 1/2" BOLTS WITH WASHERS. BOLTS SHALL CONFORM TO THE REQUIREMENTS OF ASTM A307. BOLTS AND WASHERS SHALL BE GALVANIZED. AT THE CONTRACTOR'S OPTION, STAINLESS STEEL BOLTS AND WASHERS MAY BE USED AS AN ALTERNATE FOR THE 3/4" Ø X 2 1/2" GALVANIZED BOLTS AND WASHERS. THEY SHALL CONFORM TO OR EXCEED THE MECHANICAL REQUIREMENTS OF ASTM A307. THE USE OF THIS ALTERNATE SHALL BE APPROVED BY THE ENGINEER.

C. WIRE STRUT SHOWN IN THE CONCRETE ANCHOR ASSEMBLY DETAIL IS THE MINIMUM ALLOWABLE SIZE AND SHALL HAVE A MINIMUM TENSILE STRENGTH OF 100,000 PSI. AS AN OPTION, A 7/16" Ø WIRE STRUT WITH A MINIMUM TENSILE STRENGTH OF 90,000 PSI IS ACCEPTABLE.

D. THE METAL RAIL ANCHOR ASSEMBLIES TO BE HOT DIPPED GALVANIZED TO CONFORM TO REQUIREMENTS OF AASHTO M111.

E. THE COST OF THE METAL RAIL ANCHOR ASSEMBLY WITH BOLTS AND WASHERS COMPLETE IN PLACE SHALL BE INCLUDED IN THE PRICE BID FOR LINEAR FEET OF METAL RAIL.

F. BOLTS TO BE TIGHTENED ONE-HALF TURN WITH A WRENCH FROM A FINGER-TIGHT POSITION.

THE CONTRACTOR, AT HIS OPTION, MAY USE ADHESIVELY ANCHORED ANCHOR BOLTS IN LIEU OF THE METAL RAIL ANCHOR ASSEMBLY. THE YIELD LOAD OF THE 3/4" Ø BOLT IS 10 KIPS. FIELD TESTING OF THE ADHESIVE BONDING SYSTEM IS REQUIRED.

WHEN ADHESIVELY ANCHORED ANCHOR BOLTS ARE USED, BOLTS SHALL MEET THE REQUIREMENTS OF ASTM F593 ALLOY 304 STAINLESS STEEL WITH MINIMUM 75,000 PSI ULTIMATE STRENGTH. NUTS SHALL MEET THE REQUIREMENTS OF ASTM F594 ALLOY 304 STAINLESS STEEL AND WASHERS SHALL MEET THE REQUIREMENTS OF ASTM F844 EXCEPT THEY SHALL BE MADE FROM ALLOY 304 STAINLESS STEEL.

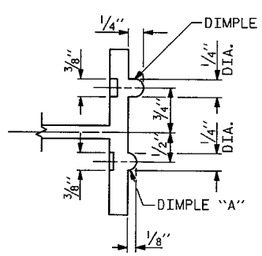

SECTION B - B

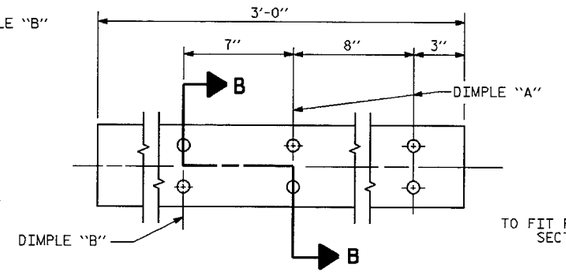

EXPANSION BAR DETAILS

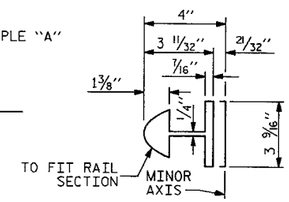

BAR SECTION

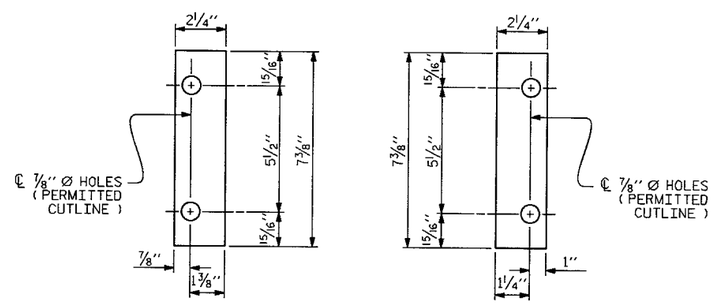

SHIM DETAILS

NOTE :
SHIMS MAY BE CUT ALONG PERMITTED CUTLINE OR SLOTTED TO EDGE OF PLATE TO FACILITATE PLACEMENT.

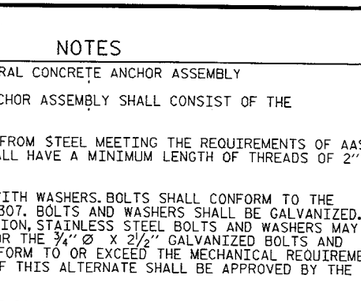

RAIL SECTION

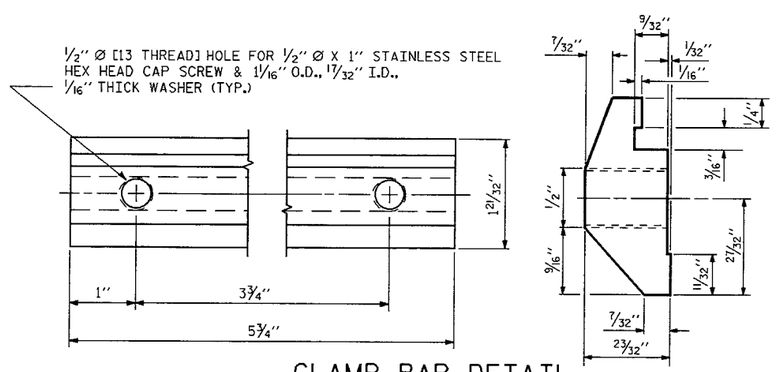

CLAMP BAR DETAIL

(4 REQUIRED PER POST)

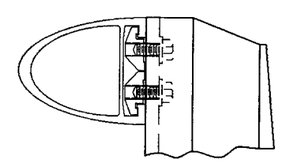

CLAMP ASSEMBLY

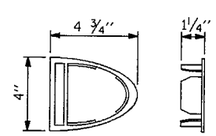

RAIL CAP

PROJECT NO. B-4308
COUNTY: WARREN
STATION: 14+98.00
REPLACES BRIDGE NO. 107

STATE OF NORTH CAROLINA
DEPARTMENT OF TRANSPORTATION
RALEIGH

STANDARD

2 BAR METAL RAIL

ASSEMBLED BY : RW	DATE : 6/10
CHECKED BY : AA	DATE : 8/10
DRAWN BY : EEM 6/94	REV. 2/6/97 EEM/RGW
CHECKED BY : RGW 6/94	REV. 8/16/99 ~~MAD/LES~~
	REV. 5/7/03 RWW/JTE

REVISIONS						SHEET NO.
NO.	BY:	DATE:	NO.	BY:	DATE:	19
1			3			TOTAL SHEETS
2			4			25

STD. NO. BMR4

13-AUG-2010 09:29
$$$$$$$$$$$$$$$$$$$$$$$$$$DGN$$$$$$$$$$$$$$$$$$$$$$$$$$
rnwelsz AT BGMU240329

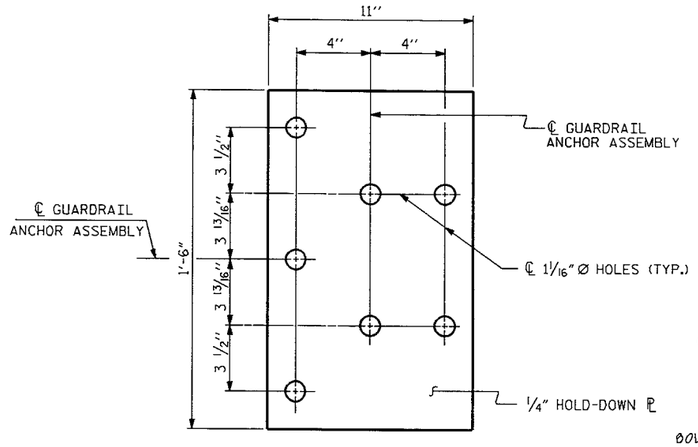

PLAN

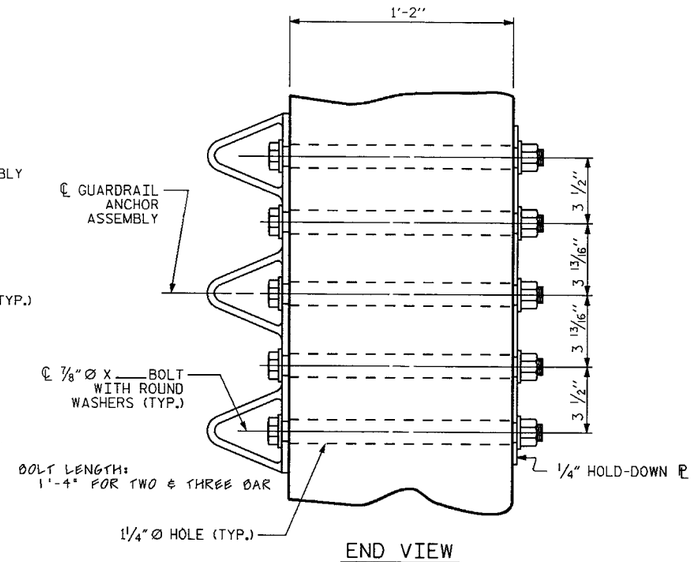

END VIEW

GUARDRAIL ANCHOR ASSEMBLY DETAILS

NOTES

THE GUARDRAIL ANCHOR ASSEMBLY SHALL CONSIST OF A 1/4" HOLD DOWN PLATE AND 7 - 7/8" Ø BOLTS WITH NUTS AND WASHERS.

THE HOLD-DOWN PLATE SHALL CONFORM TO AASHTO M270 GRADE 36. AFTER FABRICATION, THE HOLD-DOWN PLATE SHALL BE HOT-DIP GALVANIZED IN ACCORDANCE WITH AASHTO M111.

BOLTS SHALL CONFORM TO THE REQUIREMENTS OF ASTM A307 AND NUTS SHALL CONFORM TO THE REQUIREMENTS OF AASHTO M291. BOLTS, NUTS AND WASHERS SHALL BE GALVANIZED. AT THE CONTRACTOR'S OPTION, STAINLESS STEEL BOLTS, NUTS AND WASHERS MAY BE USED AS AN ALTERNATE FOR THE 7/8" Ø GALVANIZED BOLTS, NUTS AND WASHERS. THEY SHALL CONFORM TO OR EXCEED THE MECHANICAL REQUIREMENTS OF ASTM A307. THE USE OF THIS ALTERNATE SHALL BE APPROVED BY THE ENGINEER.

AFTER INSTALLATION, THE EXPOSED THREAD OF THE BOLT SHALL BE BURRED WITH A SHARP POINTED TOOL.

THE COST OF THE GUARDRAIL ANCHOR ASSEMBLIES WITH BOLTS, NUTS AND WASHERS COMPLETE IN PLACE, SHALL BE INCLUDED IN THE VARIOUS PAY ITEMS.

THE VERTICAL REINFORCING BARS MAY BE SHIFTED SLIGHTLY IN THE END POST TO CLEAR ASSEMBLY BOLTS.

THE 1 1/4" Ø HOLES SHALL BE FORMED OR DRILLED WITH A CORE BIT. IMPACT TOOLS WILL NOT BE PERMITTED. ANY CONCRETE DAMAGED BY THIS WORK SHALL BE REPAIRED TO THE SATISFACTION OF THE ENGINEER.

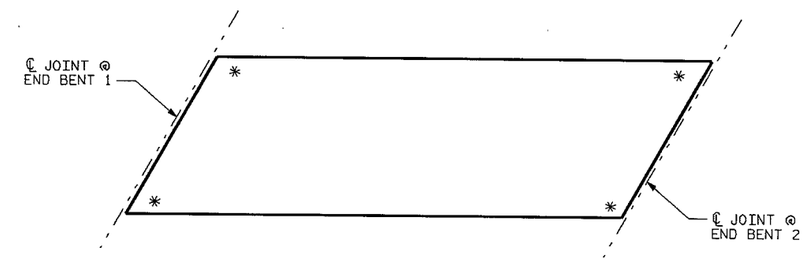

SKETCH SHOWING POINTS OF ATTACHMENT

✱ LOCATION OF GUARDRAIL ATTACHMENT

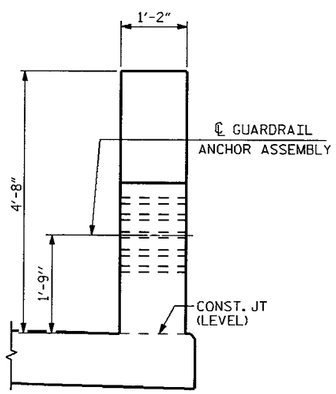

END VIEW
(TWO BAR METAL RAIL)

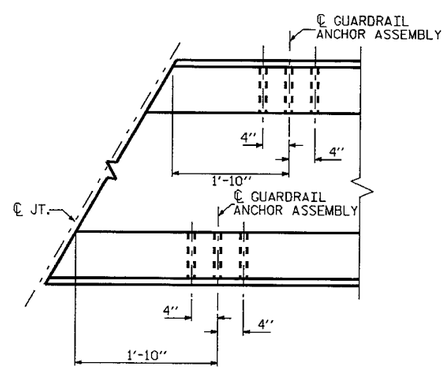

PLAN

LOCATION OF GUARDRAIL ANCHOR AT END POST

PROJECT NO. B-4308
COUNTY: WARREN
STATION: 14+98.00
REPLACES BRIDGE NO. 107

STATE OF NORTH CAROLINA
DEPARTMENT OF TRANSPORTATION
RALEIGH

STANDARD
GUARDRAIL ANCHORAGE DETAILS FOR METAL RAILS

REVISIONS							
NO.	BY:	DATE:	NO.	BY:	DATE:	SHEET NO.	20
1			3			TOTAL SHEETS	25
2			4				

STD. NO. BMR8

ASSEMBLED BY : RW		DATE : 6/10	
CHECKED BY : AA		DATE : 8/10	
DRAWN BY : EEM	6/94	REV. 10/17/00	RWW/LES
CHECKED BY : RGW	6/94	REV. 5/7/03	~~RWW/JTE~~
		REV. 5/1/06	TLA/GM

33645.1.1

WARREN

NOTES

1. STIRRUPS IN CAP MAY BE SHIFTED AS NECESSARY TO CLEAR DOWELS.
2. FOR SECTION A-A, WING, LATERAL GUIDE, AND PILE SPICE DETAILS, SEE SHEET NO. 22.

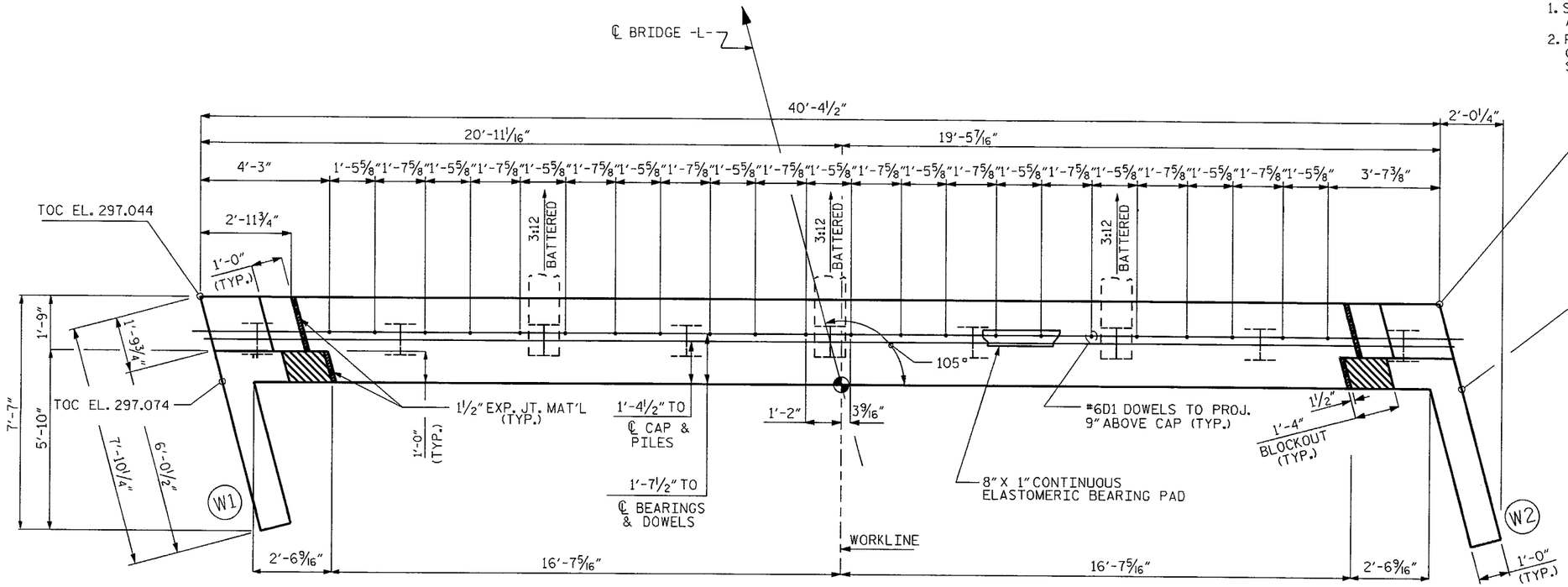

PLAN

TOP PILE ELEV.	
PILE NO.	E.B. 1
1	295.663
2	295.854
3	296.045
4	296.237
5	296.428
6	296.619
7	296.811
8	296.002
9	297.193

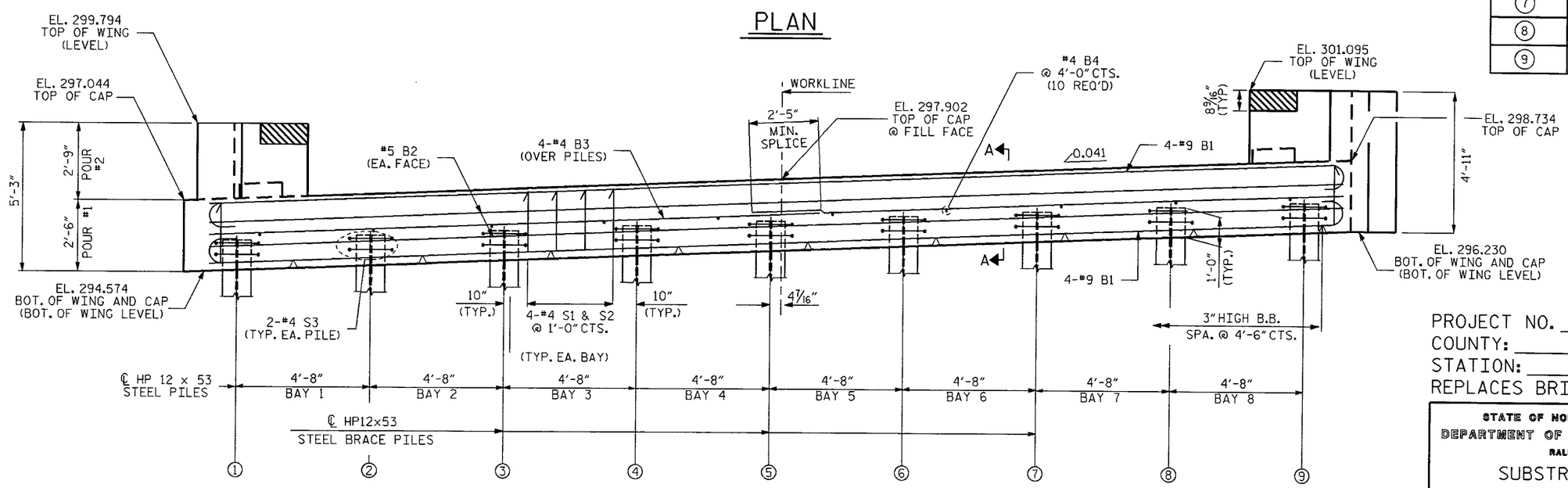

ELEVATION

PROJECT NO. B-4308
COUNTY: WARREN
STATION: 14+98.00
REPLACES BRIDGE NO. 107

STATE OF NORTH CAROLINA
DEPARTMENT OF TRANSPORTATION
RALEIGH

SUBSTRUCTURE

END BENT NO. 1

REVISIONS						SHEET NO.
NO.	BY	DATE	NO.	BY	DATE	21
1			3			TOTAL SHEETS
2			4			25

DRAWN BY: RW DATE: 5/10
CHECKED BY: PDB/AA DATE: 8/10

rmwelaz AT BGMU2403 29 19-AUG-2010 15:23

33645.1.1

WARREN

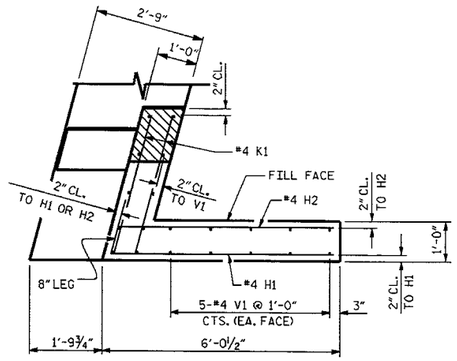

PLAN OF WING (W1)

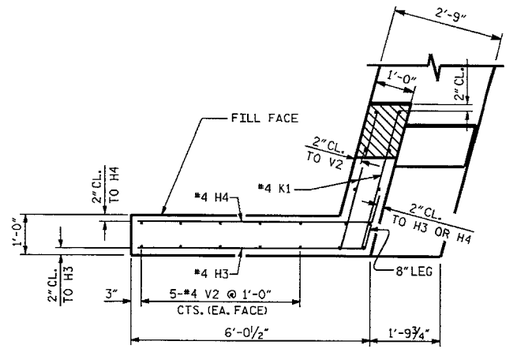

PLAN OF WING (W2)

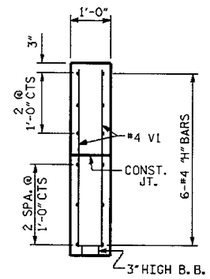

SECTION X-X

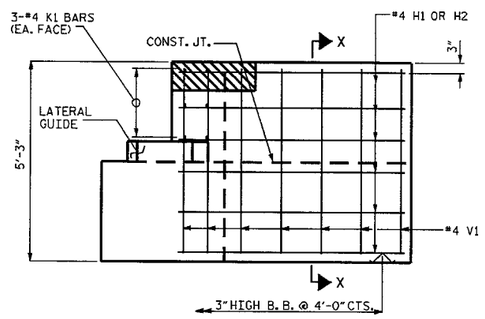

ELEVATION OF WING (W1)

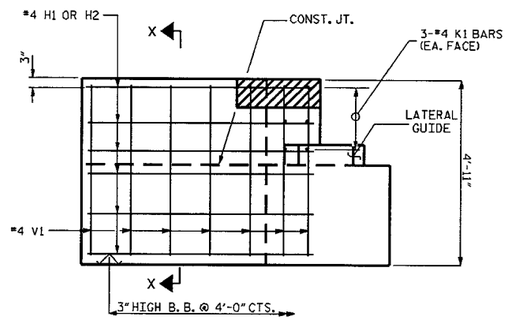

ELEVATION OF WING (W2)

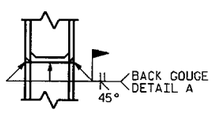

*PILE VERTICAL

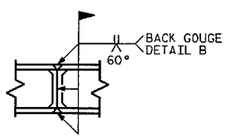

*PILE HORIZONTAL OR VERTICAL

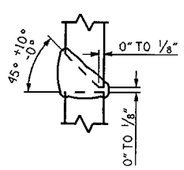

DETAIL A

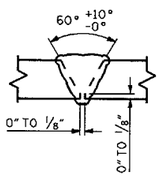

DETAIL B

*POSITION OF PILE DURING WELDING

PILE SPLICE DETAILS

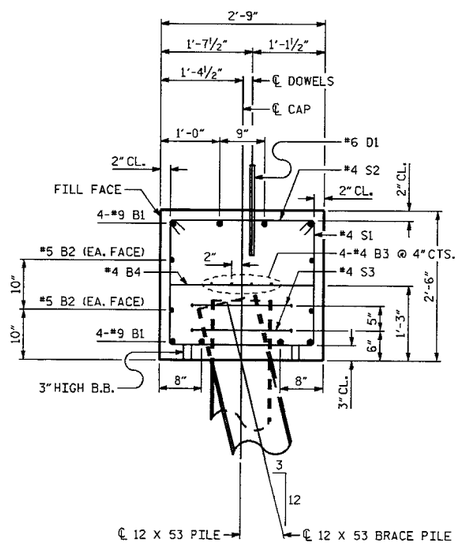

SECTION A-A

BAR TYPES

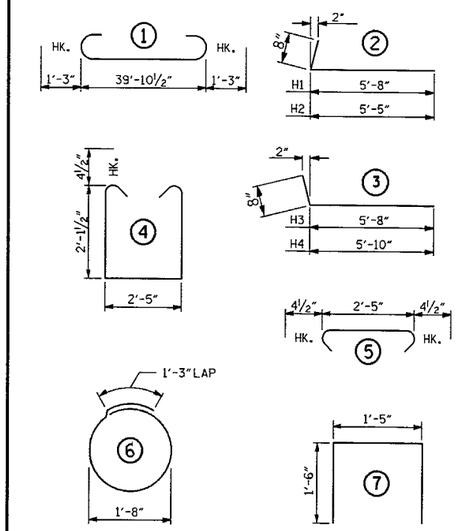

ALL BAR DIMENSIONS ARE OUT TO OUT

BILL OF MATERIAL

END BENT 1

BAR	NO.	SIZE	TYPE	LENGTH	WEIGHT
B1	8	9	1	42'-5"	1154
B2	4	5	STR	40'-0"	167
B3	8	4	STR	21'-3"	114
B4	10	4	STR	2'-5"	16
D1	22	6	STR	1'-6"	50
H1	6	4	2	6'-4"	25
H2	6	4	2	6'-1"	24
H3	6	4	3	6'-4"	25
H4	6	4	3	6'-6"	26
K1	12	4	STR	3'-2"	25
S1	34	4	4	7'-5"	168
S2	34	4	5	3'-2"	72
S3	18	4	6	6'-6"	78
U1	4	4	7	4'-5"	12
V1	20	4	STR	4'-10"	65
V2	20	4	STR	4'-6"	60

REINFORCING STEEL = 2081 LBS

CLASS A CONCRETE:

POUR 1:	CAP & LOWER PART OF WINGS	11.3 C.Y.
POUR 2:	UPPER PART OF WINGS	1.6 C.Y.
POUR 3:	LATERAL GUIDES	0.1 C.Y.
	TOTAL	13.0 C.Y.

9 HP 12 X 53 STEEL PILES = 180 LN. FT.

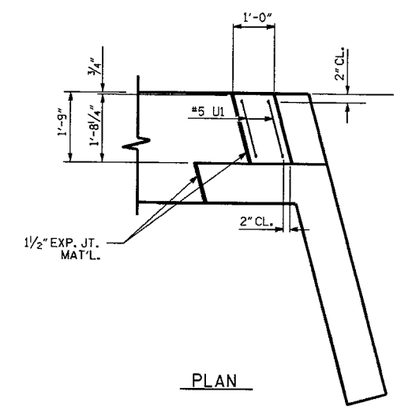

PLAN

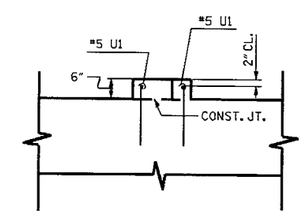

ELEVATION

LATERAL GUIDE DETAILS

PROJECT NO. B-4308
COUNTY: WARREN
STATION: 14+98.00
REPLACES BRIDGE NO. 107

STATE OF NORTH CAROLINA
DEPARTMENT OF TRANSPORTATION
RALEIGH

SUBSTRUCTURE
END BENT NO. 1
30' CL. ROADWAY

REVISIONS						SHEET NO.
NO.	BY	DATE	NO.	BY	DATE	22
1			3			TOTAL SHEETS
2			4			25

DRAWN BY: RW DATE: 6/10
CHECKED BY: PB/AA DATE: 8/10

rnwelsz AT BGMU240329 20-AUG-2010 07:31

33645.1.1

WARREN

NOTES

1. STIRRUPS IN CAP MAY BE SHIFTED AS NECESSARY TO CLEAR DOWELS.
2. FOR SECTION A-A, WING, LATERAL GUIDE, AND PILE SPICE DETAILS, SEE SHEET NO. 24.

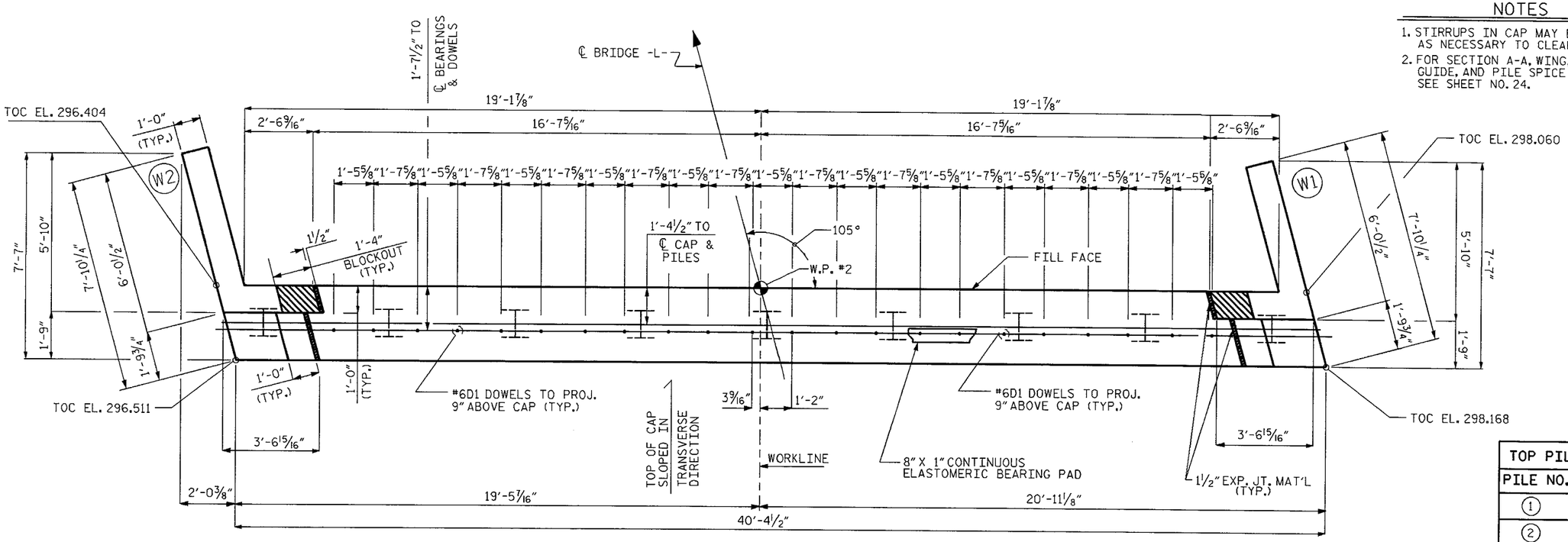

PLAN

TOP PILE ELEV.	
PILE NO.	E.B. 2
1	294.982
2	295.173
3	295.364
4	295.555
5	295.747
6	295.938
7	296.129
8	296.321
9	296.512

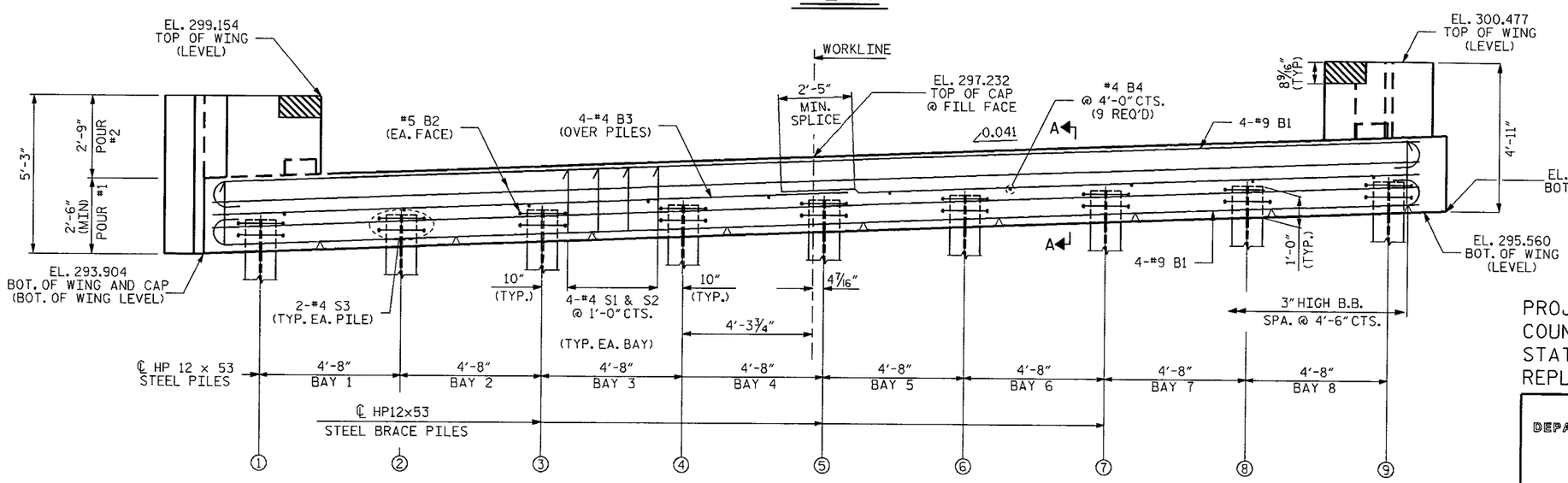

ELEVATION

PROJECT NO. B-4308
COUNTY: WARREN
STATION: 14+98.00
REPLACES BRIDGE NO. 107

STATE OF NORTH CAROLINA
DEPARTMENT OF TRANSPORTATION
RALEIGH

SUBSTRUCTURE
END BENT NO. 2

REVISIONS						SHEET NO.
NO.	BY	DATE	NO.	BY	DATE	23
1			3			TOTAL SHEETS
2			4			25

DRAWN BY: RW DATE: 6/10
CHECKED BY: PB/AA DATE: 8/10

rhwelsz AT BGMU240329 20-AUG-2010 08:10

33645.1.1

WARREN

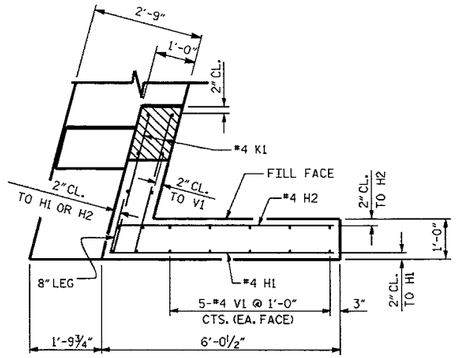

PLAN OF WING (W1)

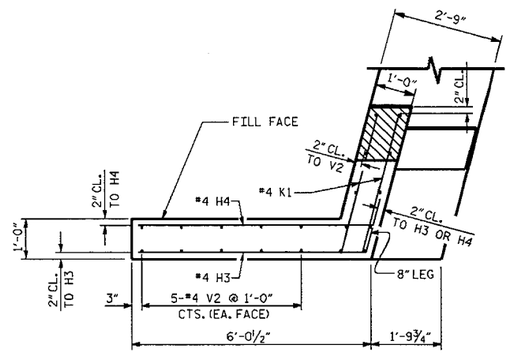

PLAN OF WING (W2)

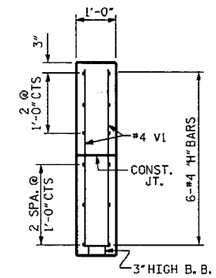

SECTION X-X

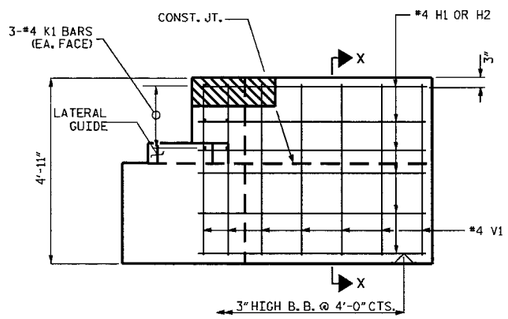

ELEVATION OF WING (W1)

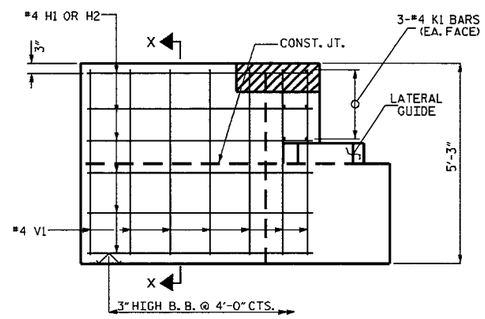

ELEVATION OF WING (W2)

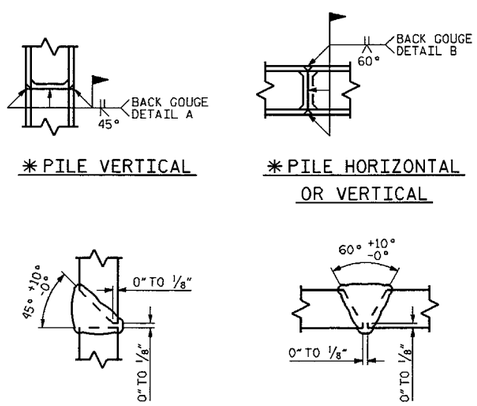

✱PILE VERTICAL

✱PILE HORIZONTAL OR VERTICAL

DETAIL A

DETAIL B

✱POSITION OF PILE DURING WELDING

PILE SPLICE DETAILS

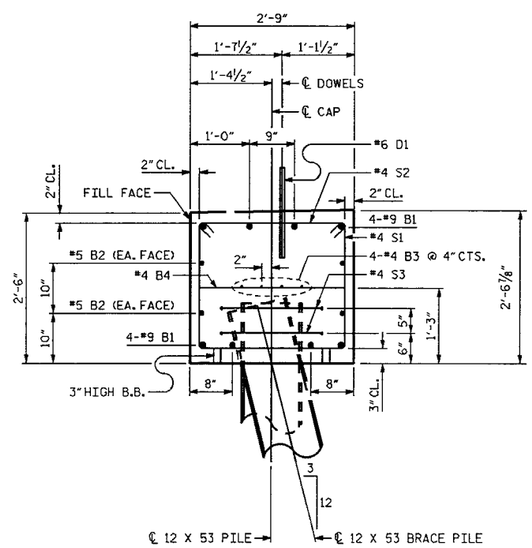

SECTION A-A

BAR TYPES

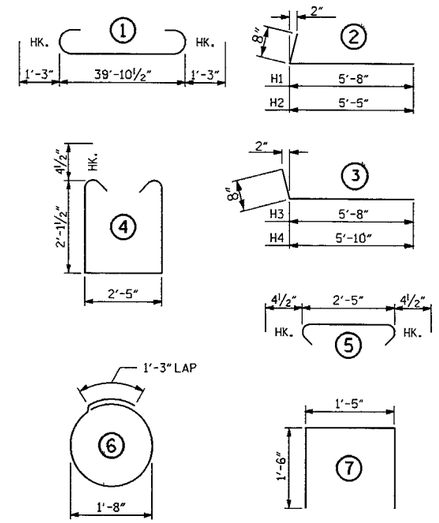

ALL BAR DIMENSIONS ARE OUT TO OUT

BILL OF MATERIAL

END BENT 1

BAR	NO.	SIZE	TYPE	LENGTH	WEIGHT
B1	8	9	1	42'-5"	1154
B2	4	5	STR	40'-0"	167
B3	8	4	STR	21'-3"	114
B4	10	4	STR	2'-5"	16
D1	22	6	STR	1'-6"	50
H1	6	4	2	6'-4"	25
H2	6	4	2	6'-1"	24
H3	6	4	3	6'-4"	25
H4	6	4	3	6'-6"	26
K1	12	4	STR	3'-2"	25
S1	34	4	4	7'-5"	168
S2	34	4	5	3'-2"	72
S3	18	4	6	6'-6"	78
U1	4	4	7	4'-5"	12
V1	20	4	STR	4'-6"	60
V2	20	4	STR	4'-10"	65

REINFORCING STEEL = 2081 LBS

CLASS A CONCRETE:

POUR 1:	CAP & LOWER PART OF WINGS	11.3 C.Y.
POUR 2:	UPPER PART OF WINGS	1.6 C.Y.
POUR 3:	LATERAL GUIDES	0.1 C.Y.
	TOTAL	13.0 C.Y.

9 HP 12 X 53 STEEL PILES = 270 LN. FT.

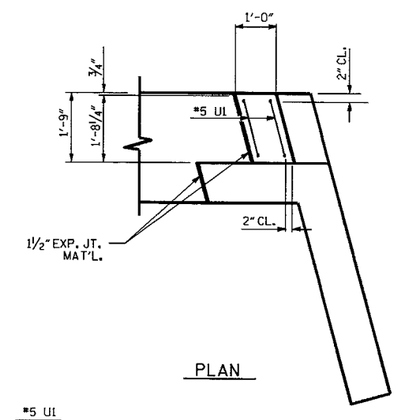

PLAN

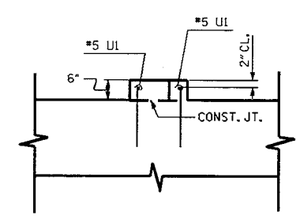

ELEVATION

LATERAL GUIDE DETAILS

PROJECT NO. B-4308
COUNTY: WARREN
STATION: 14+98.00
REPLACES BRIDGE NO. 107

STATE OF NORTH CAROLINA
DEPARTMENT OF TRANSPORTATION
RALEIGH

SUBSTRUCTURE
END BENT NO. 2
30' CL. ROADWAY

REVISIONS						SHEET NO.
NO.	BY	DATE	NO.	BY	DATE	24
1			3			TOTAL SHEETS
2			4			25

DRAWN BY: RW DATE: 6/10
CHECKED BY: PB/AA DATE: 8/10

rnwelsz AT BGMU240329 20-AUG-2010 08:37

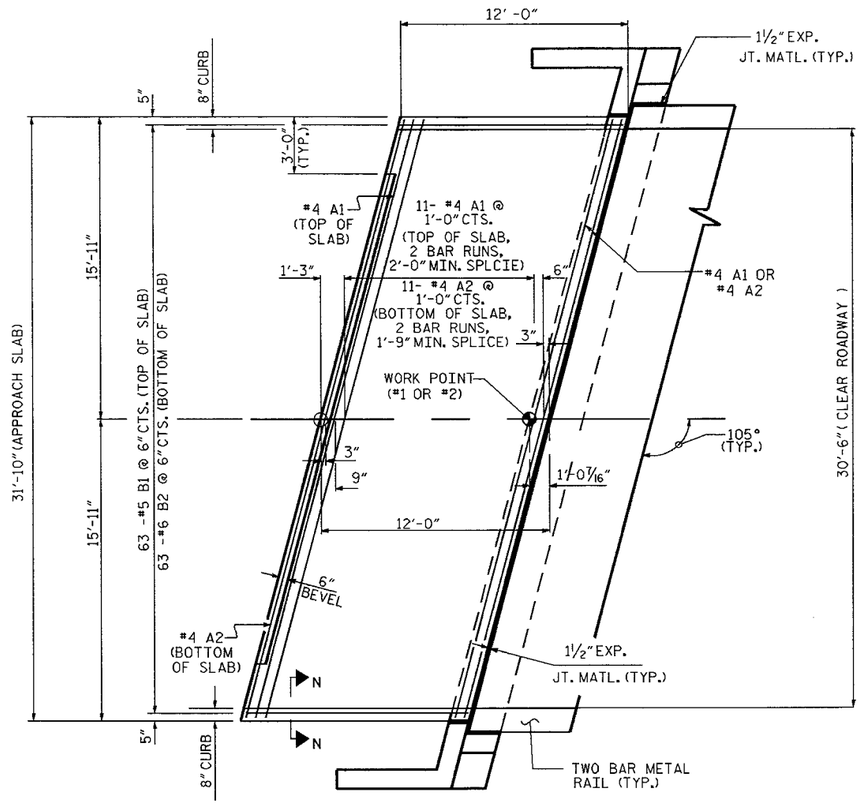

PLAN OF APPROACH SLAB

NOTES

FOR BRIDGE APPROACH FILL INCLUDING FABRIC, 4" Ø DRAINAGE PIPE, AND #78M STONE BACKFILL, SEE ROADWAY STANDARD 422.10.

APPROACH SLAB SHALL NOT BE CONSTRUCTED PRIOR TO COMPLETION OF THE BRIDGE DECK.

FABRIC SHALL BE TYPE 1 ENGINEERING FABRIC IN ACCORDANCE WITH THE STANDARD SPECIFICATIONS SECTION 1056.

#78M STONE BACKFILL (CLASS V SELECT MATERIAL) SHALL BE IN ACCORDANCE WITH STANDARD SPECIFICATIONS SECTION 1016.

#78M STONE BACKFILL IS TO BE CONTINUOUS ALONG FILL FACE OF BACKWALL FROM OUTSIDE EDGE TO OUTSIDE EDGE OF APPROACH SLAB.

FOR THE 4" Ø DRAINAGE PIPE OUTLET(S), SEE ROADWAY STANDARD DRAWINGS.

AREA BETWEEN THE WINGWALL AND APPROACH SLAB SHALL BE GRADED TO DRAIN THE WATER AWAY FROM THE FILL FACE OF THE BRIDGE AND SHALL BE PAVED WITH 4" OF INTERMEDIATE OR SURFACE COURSE ASPHALT.

THE 6" COMP. A.B.C. SHALL BE FLUSH WITH THE ROADWAY END OF THE APPROACH SLAB AND SHALL EXTEND 1'-0" OUTSIDE OF EACH EDGE OF THE APPROACH SLAB.

THE CONTRACTOR MAY USE 4" TYPE B-25.0B ASPHALT CONCRETE BASE COURSE IN LIEU OF 6" COMP. A.B.C. IF THIS OPTION IS USED, THE BASE COURSE SHALL BE FLUSH WITH THE ROADWAY END OF THE APPROACH SLAB, AND THE WIDTH SHALL BE THE SAME AS THAT OF THE APPROACH SLAB.

THE CONTRACTOR MAY USE CLASS "A" CONCRETE BASE IN LIEU OF 6" COMP. A.B.C. IF THIS OPTION IS USED, THE CONCRETE BASE SHALL BE FLUSH WITH THE ROADWAY END OF THE APPROACH SLAB, AND THE WIDTH SHALL BE THE SAME AS THAT OF THE APPROACH SLAB. THE CONCRETE SHALL BE FINISHED TO A SMOOTH SURFACE AND A LAYER OF 30 LB ROOFING FELT SHALL BE PLACED BETWEEN THE CONCRETE BASE AND THE APPROACH SLAB TO PREVENT BOND. THE APPROACH SLAB SHALL NOT BE CAST UNTIL THE CONCRETE BASE HAS REACHED AN AGE OF THREE CURING DAYS.

FOR JOINT DETAILS, SEE SHEET, NO. 16.

THE JOINT AT THE END BENT SHALL BE GROUTED AS SOON AS PRACTICAL AFTER THE CONSTRUCTION OF THE APPROACH SLABS.

APPROACH SLAB GROOVING IS NOT REQUIRED.

WORK SHOWN ON THIS DRAWING WILL BE PAID UNDER THE LUMP SUM PRICE FOR APPROACH SLABS.

TEMPORARY DRAINAGE AND TEMPORARY BERM AND SLOPE DRAINS WILL BE PAID FOR UNDER THE LUMP SUM PRICE FOR APPROACH SLABS. SEE ROADWAY STANDARD 1622.01.

BILL OF MATERIAL

FOR ONE APPROACH SLAB (2 REQ'D)

BAR	NO.	SIZE	TYPE	LENGTH	WEIGHT
* A1	26	4	STR	17'-4"	301
A2	26	4	STR	17'-2"	298
* B1	63	5	STR	11'-3"	739
B2	63	6	STR	11'-7"	1096
REINFORCING STEEL				LBS.	1394
* EPOXY COATED REINFORCING STEEL				LBS.	1040
CLASS AA CONCRETE				C. Y.	15.5

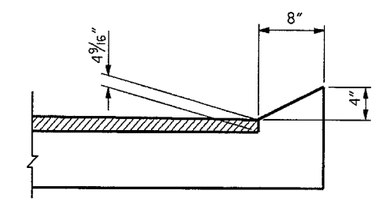

SECTION N-N

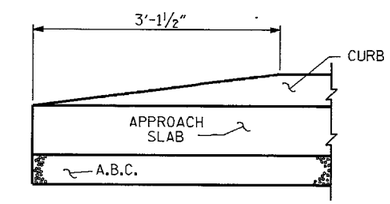

END OF CURB WITHOUT SHOULDER BERM GUTTER

CURB DETAILS

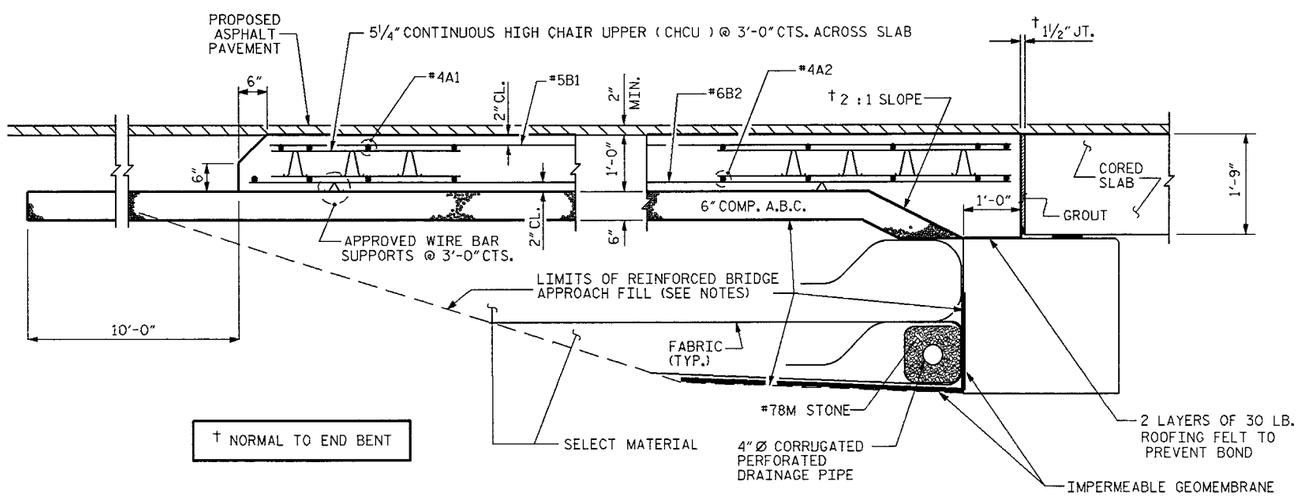

† NORMAL TO END BENT

SECTION THRU SLAB

NOT TO SCALE

PROJECT NO. : B-4308
COUNTY: WARREN
STATION: 14+98.00
REPLACES BRIDGE NO. 107

STATE OF NORTH CAROLINA
DEPARTMENT OF TRANSPORTATION
RALEIGH

STANDARD

BRIDGE APPROACH SLAB FOR PRESTRESSED CONCRETE CORED SLAB

REVISIONS						SHEET NO.
NO.	BY:	DATE:	NO.	BY:	DATE:	25
1			3			TOTAL SHEETS
2			4			25

DRAWN BY: RW DATE: 06/10
CHECKED BY: AA DATE: 08/10

STD. NO. BAS13

B-4308

WARREN

EROSION CONTROL PLAN

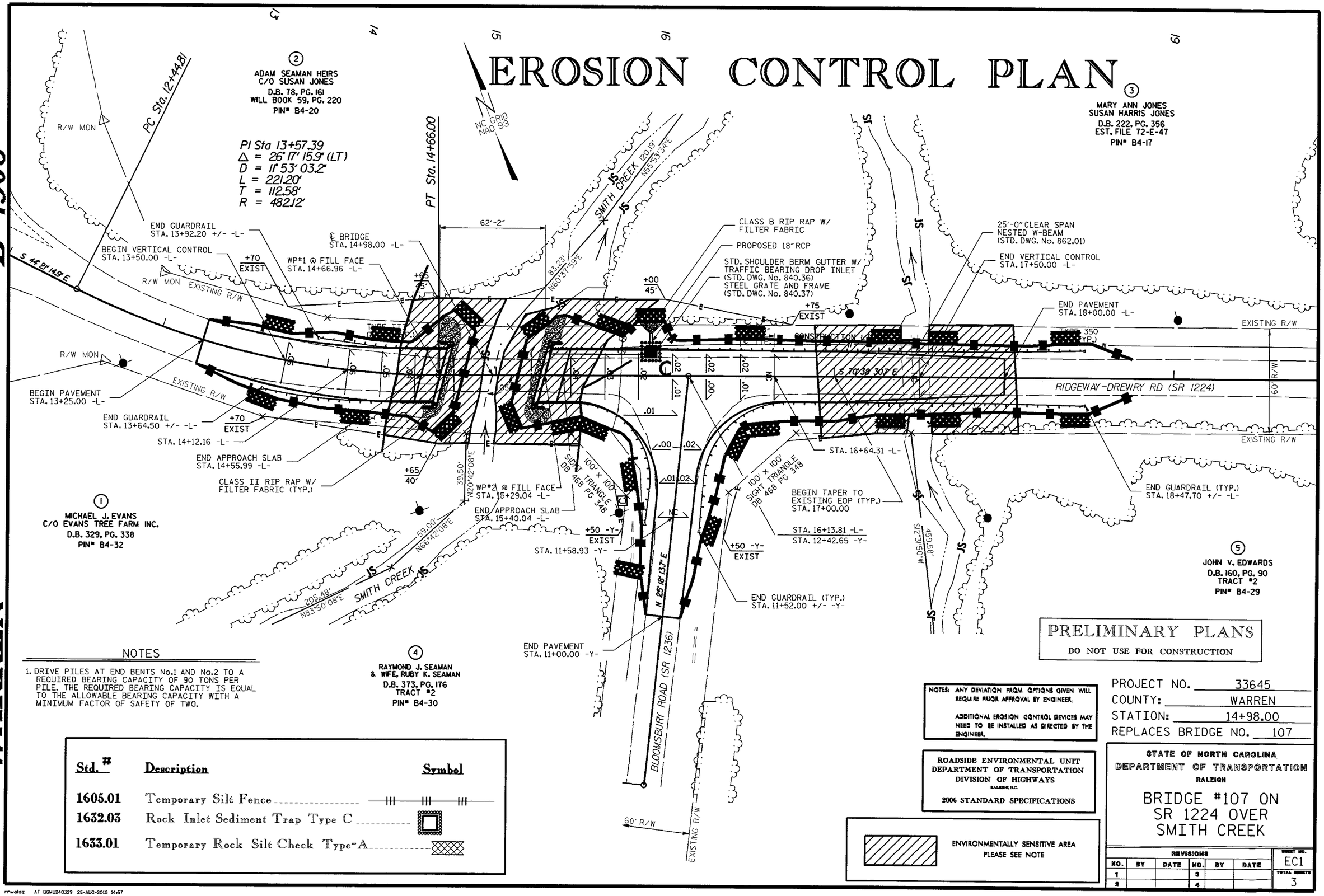

NOTES

1. DRIVE PILES AT END BENTS No.1 AND No.2 TO A REQUIRED BEARING CAPACITY OF 90 TONS PER PILE. THE REQUIRED BEARING CAPACITY IS EQUAL TO THE ALLOWABLE BEARING CAPACITY WITH A MINIMUM FACTOR OF SAFETY OF TWO.

Std. #	Description	Symbol
1605.01	Temporary Silt Fence	
1632.03	Rock Inlet Sediment Trap Type C	
1633.01	Temporary Rock Silt Check Type-A	

PRELIMINARY PLANS
DO NOT USE FOR CONSTRUCTION

NOTES: ANY DEVIATION FROM OPTIONS GIVEN WILL REQUIRE PRIOR APPROVAL BY ENGINEER.

ADDITIONAL EROSION CONTROL DEVICES MAY NEED TO BE INSTALLED AS DIRECTED BY THE ENGINEER.

ROADSIDE ENVIRONMENTAL UNIT
DEPARTMENT OF TRANSPORTATION
DIVISION OF HIGHWAYS
RALEIGH, N.C.
2006 STANDARD SPECIFICATIONS

ENVIRONMENTALLY SENSITIVE AREA
PLEASE SEE NOTE

PROJECT NO. 33645
COUNTY: WARREN
STATION: 14+98.00
REPLACES BRIDGE NO. 107

STATE OF NORTH CAROLINA
DEPARTMENT OF TRANSPORTATION
RALEIGH

BRIDGE #107 ON SR 1224 OVER SMITH CREEK

REVISIONS						SHEET NO.
NO.	BY	DATE	NO.	BY	DATE	EC1
1			3			TOTAL SHEETS
2			4			3

rrwelsz AT BGMU240329 25-AUG-2010 14:57

B-4308

WARREN

EROSION CONTROL PLAN

STATE OF NORTH CAROLINA
DEPT. OF TRANSPORTATION
DIVISION OF HIGHWAYS
RALEIGH, N.C.

ENGLISH STANDARD DRAWING FOR

TEMPORARY SILT FENCE

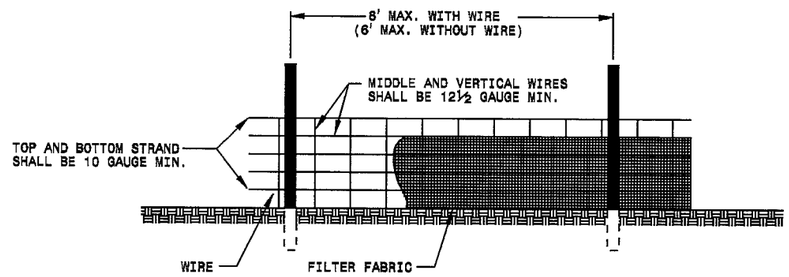

NOTES
USE WIRE A MINIMUM OF 32" IN WIDTH AND WITH A MINIMUM OF 6 LINE WIRES WITH 12" STAY SPACING.
USE FILTER FABRIC A MINIMUM OF 36" IN WIDTH AND FASTEN ADEQUATELY TO THE WIRE AS DIRECTED BY THE ENGINEER.
PROVIDE 5'-0" STEEL POST OF THE SELF-FASTENER ANGLE STEEL TYPE.

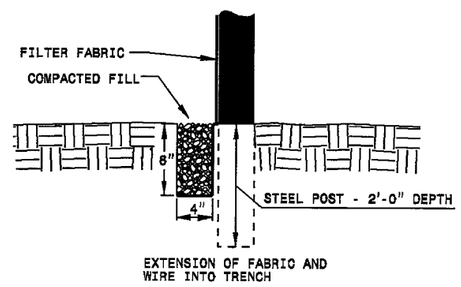

SHEET 1 OF 1
1605.01

STATE OF NORTH CAROLINA
DEPT. OF TRANSPORTATION
DIVISION OF HIGHWAYS
RALEIGH, N.C.

ENGLISH STANDARD DRAWING FOR

TEMPORARY SILT FENCE

SHEET 1 OF 1
1605.01

STATE OF NORTH CAROLINA
DEPT. OF TRANSPORTATION
DIVISION OF HIGHWAYS
RALEIGH, N.C.

ENGLISH STANDARD DRAWING FOR

TEMPORARY ROCK SILT CHECK TYPE 'A'

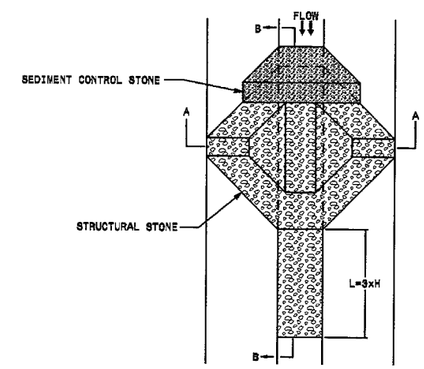

PLAN

NOTE
USE CLASS 'B' EROSION CONTROL STONE FOR STRUCTURAL STONE.
USE NO. 5 OR NO. 57 STONE FOR SEDIMENT CONTROL STONE.

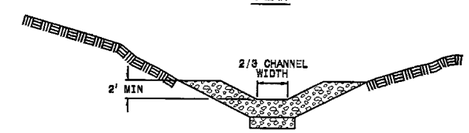

SECTION A-A

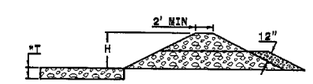

SECTION B-B
*T = 12" MIN., 18" MAX.

STATE OF NORTH CAROLINA
DEPT. OF TRANSPORTATION
DIVISION OF HIGHWAYS
RALEIGH, N.C.

ENGLISH STANDARD DRAWING FOR

TEMPORARY ROCK SILT CHECK TYPE 'A'

SHEET 1 OF 1
1633.01

NOTES: ANY DEVIATION FROM OPTIONS GIVEN WILL REQUIRE PRIOR APPROVAL BY ENGINEER.

ADDITIONAL EROSION CONTROL DEVICES MAY NEED TO BE INSTALLED AS DIRECTED BY THE ENGINEER.

ROADSIDE ENVIRONMENTAL UNIT
DEPARTMENT OF TRANSPORTATION
DIVISION OF HIGHWAYS
RALEIGH, N.C.

2006 STANDARD SPECIFICATIONS

PROJECT NO. 33645
COUNTY: WARREN
STATION: 14+98.00
REPLACES BRIDGE NO. 107

STATE OF NORTH CAROLINA
DEPARTMENT OF TRANSPORTATION
RALEIGH

BRIDGE #107 ON
SR 1224 OVER
SMITH CREEK

REVISIONS						SHEET NO.
NO.	BY	DATE	NO.	BY	DATE	EC2
1			3			TOTAL SHEETS
2			4			3

B-4308

WARREN

EROSION CONTROL PLAN

Environmentally Sensitive Areas:

This project is located in an "Environmentally Sensitive Area," This designation requires special procedures to be used for clearing and grubbing, temporary stream crossings, and grading operations within the area identified on the plans. This also requires special procedures to be used for seeding and mulching and staged seeding within the project.

Clearing and Grubbing:

In areas identified on the erosion control plans as "Environmentally Sensitive Areas", the Contractor may perform clearing operations, but not grubbing operations until immediately prior to beginning grading operations as described in Section 200, Article 200-1, in the Standard Specifications. The "Environmentally Sensitive Area" shall be defined as a 50 foot buffer zone on both sides of the stream (or depression), measured from top of streambank, (or center of depression). Only clearing operations (not grubbing) shall be allowed in this buffer zone until immediately prior to beginning grading operations. Erosion control devices shall be installed immediately following the clearing operation.

Grading:

Once grading operations begin in identified "Environmentally Sensitive Areas", work will progress in a continuous manner until complete. All construction within these areas must progress in a continuous manner such that each phase is complete and areas permanently stabilized prior to beginning of next phase. Failure on the part of the Contractor to complete any phase of construction in a continuous manner in "Environmentally Sensitive Areas" as specified will be just cause for the Engineer to direct the suspension of work in accordance with Section 108-7 of the Standard Specifications.

Temporary Stream Crossings:

Any crossing of streams within the limits of this project must be accomplished in accordance with Section 107-13(b) of the Standard Specifications.

Seeding and Mulching:

Seeding and mulching shall be performed in accordance with Section 1660 of the Standard Specifications and vegetative cover sufficient to restrain erosion shall be installed immediately following grade establishment.

Seeding and mulching shall be performed on the areas disturbed by construction immediately following final grade establishment. No appreciable time shall lapse into the contract time without stabilization of slopes, ditches and other areas within the "Environmentally Sensitive Areas" as indicated on the erosion control plans.

Stage Seeding:

The work covered by this section shall consist of the establishment of a vegetative cover on cut and fill slopes as grading progresses. Seeding and mulching shall be done in stages on cut and fill slopes which are greater than 20 feet in height measured along the slope, or greater than 2 acres in area. Each stage shall not exceed the limits stated above.

All work described above will be paid for at the contract price for "Lump Sum for Erosion Control" established in the contract for the work involved. Additional payments will not be made for the requirements of this section as the cost for this work should be included in the contract price for "Lump Sum for Erosion Control" for the work involved.

STATE OF NORTH CAROLINA
DEPT. OF TRANSPORTATION
DIVISION OF HIGHWAYS
RALEIGH, N.C.

ENGLISH STANDARD DRAWING FOR
ROCK INLET SEDIMENT TRAP TYPE 'C'

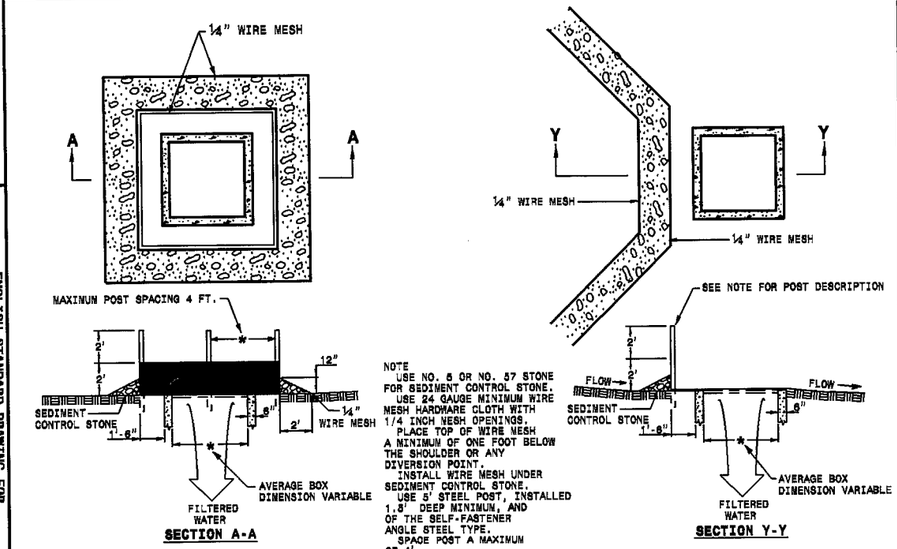

MULTI-DIRECTIONAL FLOW

SINGLE-DIRECTIONAL FLOW

SHEET 1 OF 1
1632.03

STATE OF NORTH CAROLINA
DEPT. OF TRANSPORTATION
DIVISION OF HIGHWAYS
RALEIGH, N.C.

ENGLISH STANDARD DRAWING FOR
ROCK INLET SEDIMENT TRAP TYPE 'C'

SHEET 1 OF 1
1632.03

NOTES: ANY DEVIATION FROM OPTIONS GIVEN WILL REQUIRE PRIOR APPROVAL BY ENGINEER.

ADDITIONAL EROSION CONTROL DEVICES MAY NEED TO BE INSTALLED AS DIRECTED BY THE ENGINEER.

ROADSIDE ENVIRONMENTAL UNIT
DEPARTMENT OF TRANSPORTATION
DIVISION OF HIGHWAYS
RALEIGH, N.C.

2006 STANDARD SPECIFICATIONS

PROJECT NO. 33645
COUNTY: WARREN
STATION: 14+98.00
REPLACES BRIDGE NO. 107

STATE OF NORTH CAROLINA
DEPARTMENT OF TRANSPORTATION
RALEIGH

BRIDGE #107 ON
SR 1224 OVER
SMITH CREEK

REVISIONS						SHEET NO.
NO.	BY	DATE	NO.	BY	DATE	EC3
1			3			TOTAL SHEETS
2			4			3