PROJ. NO. B-5229

48 ALEXANDER COUNTY

B.M. #1 - RR SPIKE SET IN POWER POLE 197' LEFT OF STA. 15+08.00 -L-, ELEV. = 991.69.

B.M. #2 - RR SPIKE SET IN TELEPHONE POLE 30' RIGHT OF STA. 16+09.00 -L-, ELEV. = 986.00.

HORIZONTAL CURVE DATA

PI STA. 14+71.64
△ = 12°22'30.8" (LT.)
D = 2°36'15.7"
L = 475.17'
T = 238.52'
R = 2,200.00'

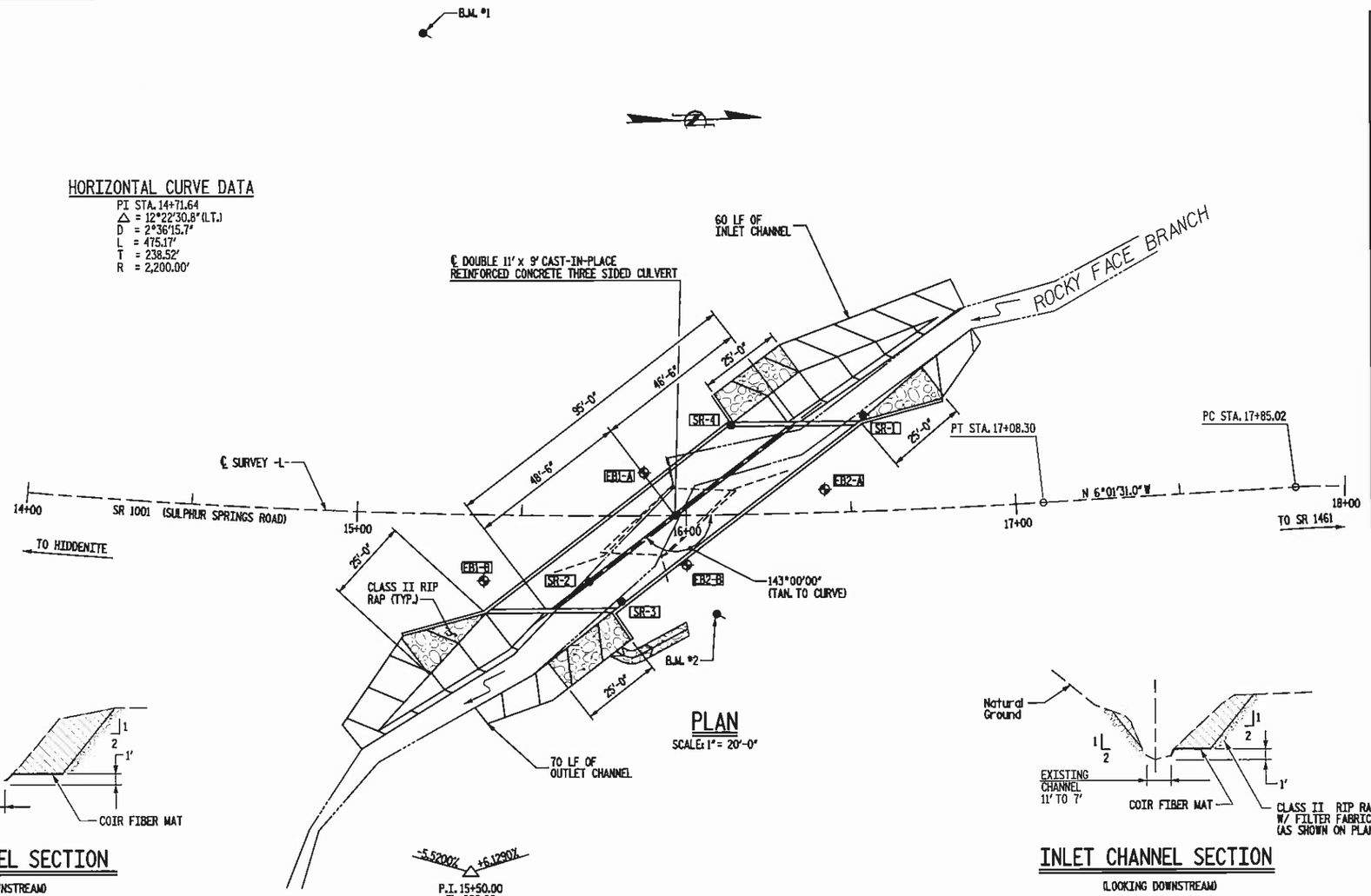

PLAN

SCALE: 1" = 20'-0"

PROFILE ALONG ℄ SURVEY

SCALE: 1" = 20'

NOTES

1. ASSUMED LIVE LOAD ——— HS20 OR ALTERNATE LOADING.
2. DESIGN FILL ——— 4.57'.
3. FOR OTHER DESIGN DATA AND NOTES SEE STANDARD NOTE SHEET.
4. THE REQUIRED BEARING CAPACITY OF THE SPREAD FOOTING IS 4 TSF. FOOTINGS SHALL BE KEYED 6" MINIMUM DEPTH INTO WEATHERED ROCK. THE REQUIRED BEARING CAPACITY SHALL BE VERIFIED.
5. THE ENGINEER SHALL CHECK THE LENGTH OF CULVERT BEFORE STAKING IT OUT TO MAKE CERTAIN THAT IT WILL PROPERLY TAKE CARE OF THE FILL.
6. THE EXISTING BRIDGE SHALL BE REMOVED BY SAWING AND/OR NON SHATTERING METHODS SUCH THAT DEBRIS WILL NOT FALL INTO THE WATER.
7. THE QUANTITY OF RIP RAP TO BE PAID FOR WILL BE THE ACTUAL NUMBER OF TONS OF CLASS I AND CLASS B RIP RAP WHICH HAVE BEEN INCORPORATED INTO THE COMPLETED AND ACCEPTED WORK. THE RIP RAP WILL BE MEASURED BY BEING WEIGHED IN TRUCKS ON CERTIFIED PLATFORM SCALES OR OTHER CERTIFIED WEIGHING DEVICES. THE QUANTITY OF RIP RAP WILL BE PAID FOR AT THE CONTRACT UNIT PRICE PER TON:

PLAIN RIP RAP CLASS II (1'-6" THICK)	FILTER FABRIC
135 TONS	190 SQUARE YARDS
PLAIN RIP RAP CLASS B (1'-6" THICK)	
32 TONS	80 SQUARE YARDS

8. CURRENT ADT = 900 VPD.
9. FOR CRANE SAFETY, SEE SPECIAL PROVISIONS.
10. FOR FALSEWORK AND FORMWORK, SEE SPECIAL PROVISIONS.
11. FOR SUBMITTAL OF WORKING DRAWINGS, SEE SPECIAL PROVISIONS.

✥ GEOTECH BORE HOLES LOCATION
● SOUNDING ROD

HYDRAULIC DATA

DESIGN DISCHARGE	=	1000	CFS
DESIGN FREQUENCY	=	25	YRS
DESIGN HW ELEVATION	=	983.55	FT
DRAINAGE AREA	=	3.33	SQ MI
BASE DISCHARGE (Q_{100})	=	1600	CFS
OVERTOPPING (Q > 200)	=	2020	CFS
BASE HW ELEVATION	=	985.68	FT

DESCRIPTION OF EXISTING BRIDGE

1 SPAN @ 20'-6"; 2" ASPHALT WEARING SURFACE ON 4" x 8" TIMBER FLOOR ON I-BEAMS; ON CONCRETE ABUTMENTS; 20'-5" CLEAR ROADWAY WIDTH SHALL BE REMOVED.

PROJECT NO. 42827
COUNTY: ALEXANDER
STATION: 15+96.50
REPLACES BRIDGE NO. 48

STATE OF NORTH CAROLINA
DEPARTMENT OF TRANSPORTATION
RALEIGH

CULVERT ON SR 1001
OVER ROCKY FACE BRANCH

Florence & Hutcheson
CONSULTING ENGINEERS
5121 Kingdom Way, Suite 100 Raleigh, NC 27607
NC License No: F-0258

NORTH CAROLINA PROFESSIONAL SEAL 20532 ENGINEER JAMES E. MONDOLFI
3/26/10

REVISIONS						SHEET NO.
NO.	BY	DATE	NO.	BY	DATE	1
1			3			TOTAL SHEETS
2			4			17

DRAWN BY: B.E. LANNING DATE: NOV. 2009
CHECKED BY: J.E. MONDOLFI DATE: NOV. 2009

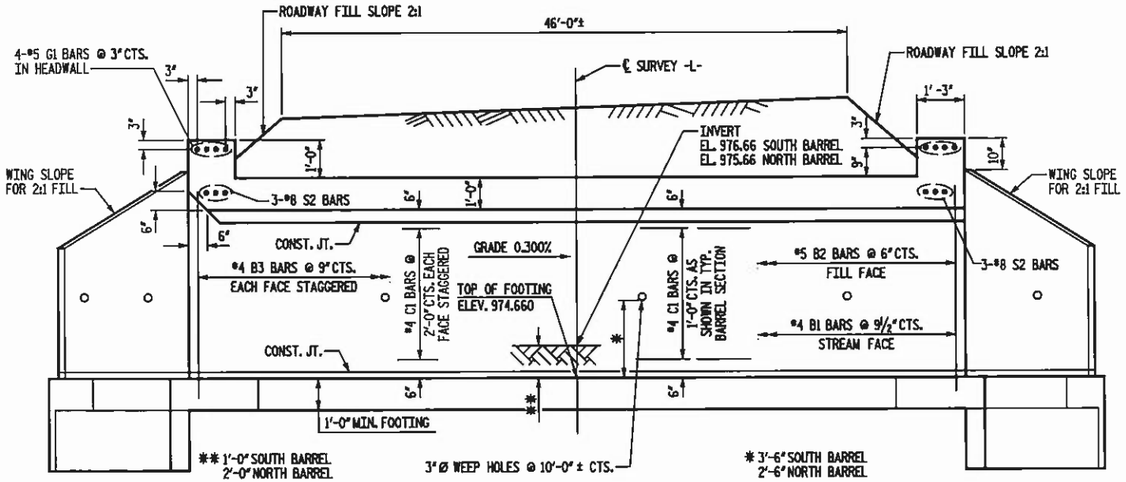

INTERIOR WALL

EXTERIOR WALL

CULVERT SECTION NORMAL TO ROADWAY

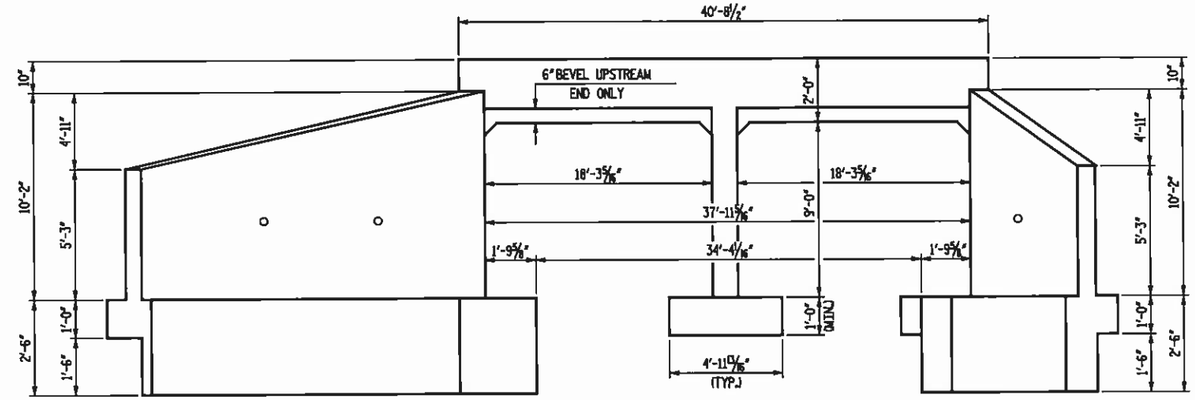

END ELEVATION NORMAL TO SKEW

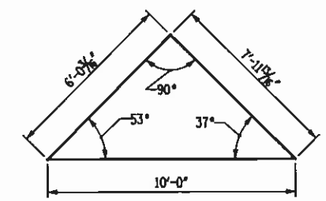

SKEW TRIANGLE

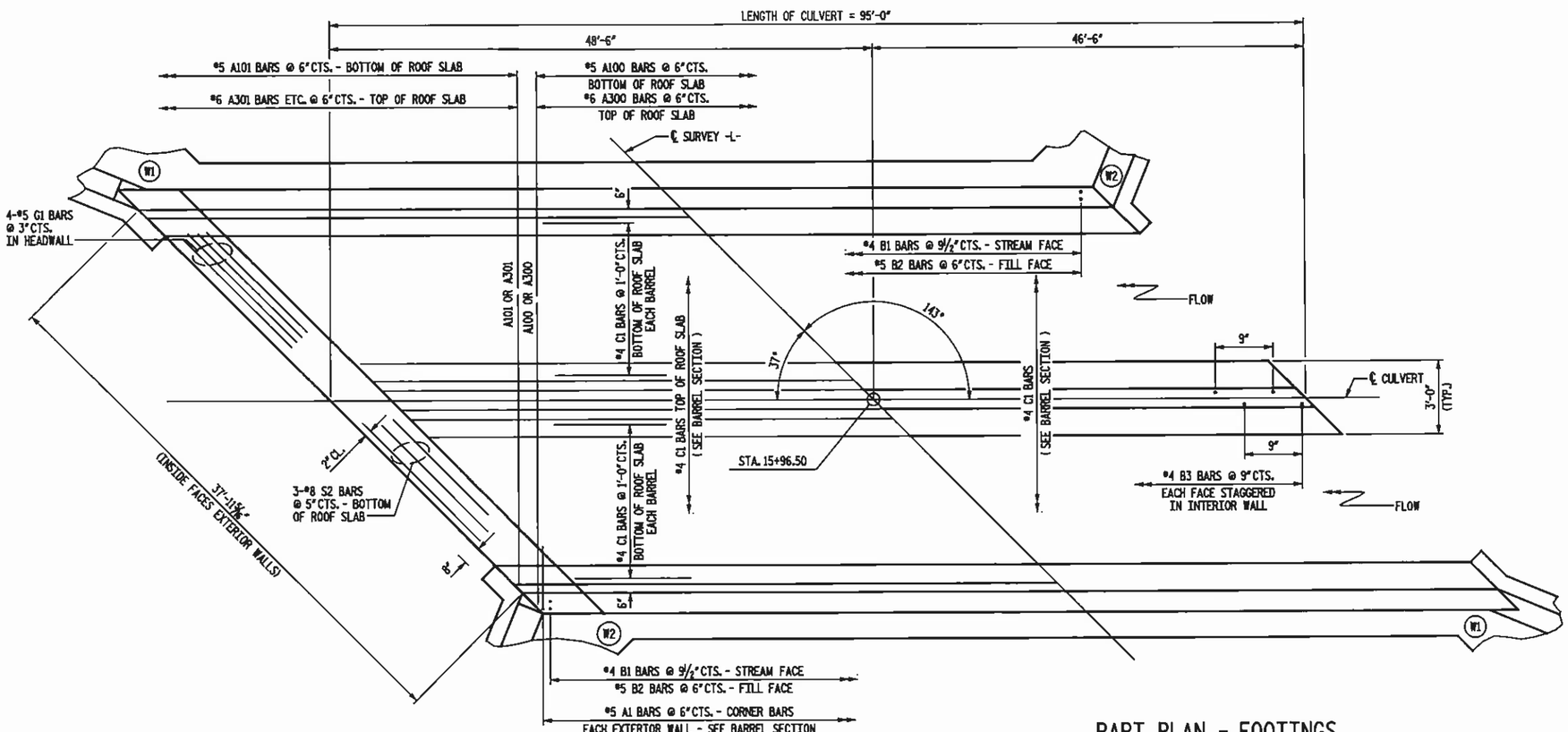

PART PLAN - ROOF SLAB

PART PLAN - FOOTINGS

NOT TO SCALE

PROJECT NO. 42827
COUNTY: ALEXANDER
STATION: 15+96.50
REPLACES BRIDGE NO. 48

STATE OF NORTH CAROLINA
DEPARTMENT OF TRANSPORTATION
RALEIGH

DOUBLE 11' x 9' CAST-IN-PLACE REINFORCED CONCRETE THREE SIDED CULVERT 143°00'00" SKEW

Florence & Hutcheson
CONSULTING ENGINEERS
5121 Kingdom Way, Suite 100 Raleigh, NC 27607
NC License No: F-0258

NORTH CAROLINA PROFESSIONAL SEAL 20532 JAMES E. MONDOLFI
3/26/10

REVISIONS						SHEET NO.
NO.	BY	DATE	NO.	BY	DATE	2
1			3			TOTAL SHEETS
2			4			17

DRAWN BY: B.E. LANNING DATE: NOV. 2009
CHECKED BY: J.E. MONDOLFI DATE: NOV. 2009

PLOT: 3/26/2010 10:40:02 AM Ex 5. Associates, P.C.
FILE NAME: p:\mss\ch12\alexander_42\mod2TBS\culvert\culv\VA_ch12_TB.dgn

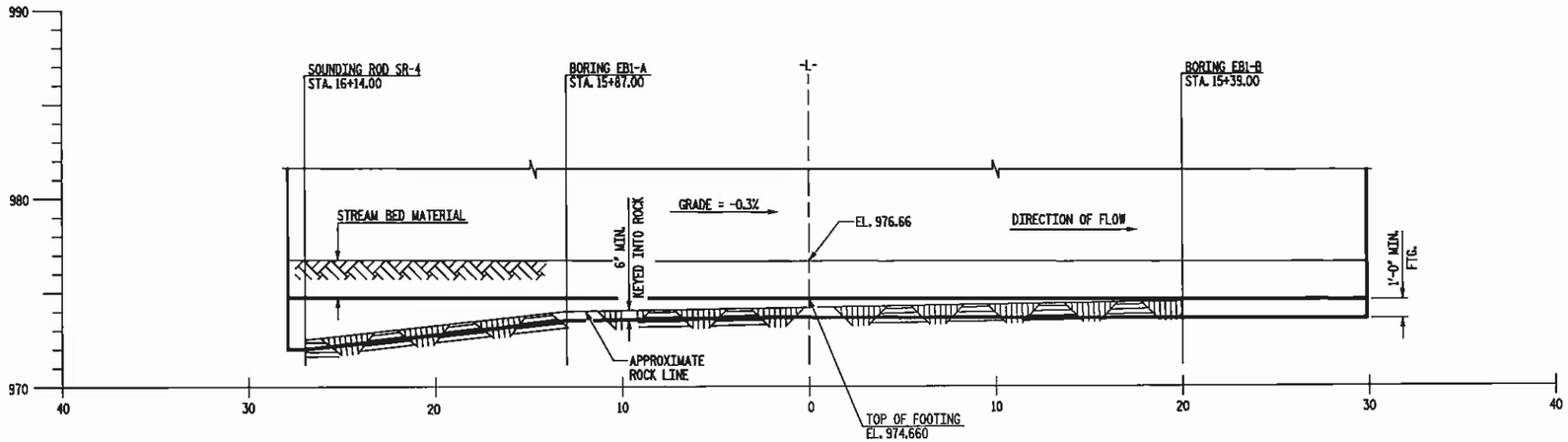

ROCK PROFILE ALONG SOUTH FOOTING

(LOOKING STATION AHEAD)

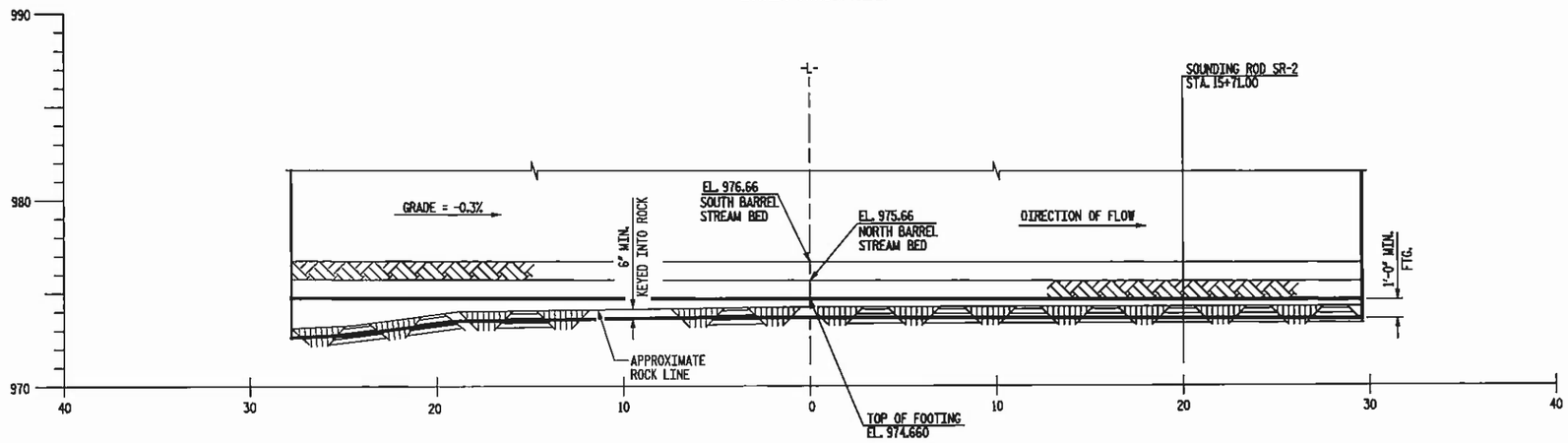

ROCK PROFILE ALONG MIDDLE FOOTING

(LOOKING STATION AHEAD)

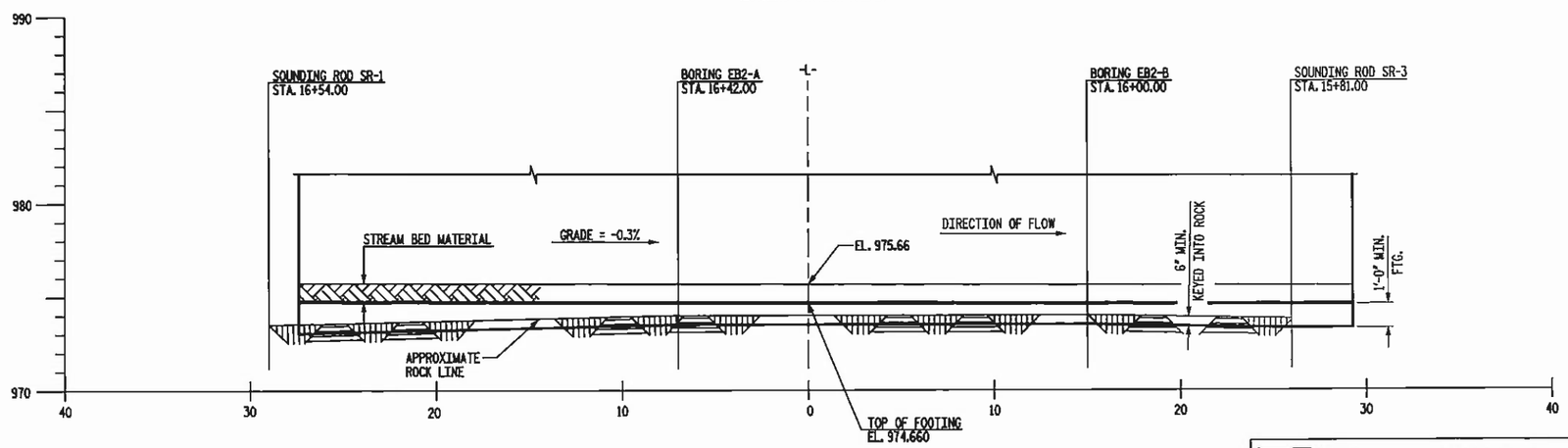

ROCK PROFILE ALONG NORTH FOOTING

(LOOKING STATION AHEAD)

NOTE:
ROCK PROFILES SHOWN ARE ESTIMATED.
ROCK PROFILES ARE NOT GUARANTEED.

PROJECT NO. 42827
COUNTY: ALEXANDER
STATION: 15+96.50
REPLACES BRIDGE NO. 48

STATE OF NORTH CAROLINA
DEPARTMENT OF TRANSPORTATION
RALEIGH

DOUBLE 11' x 9' CAST-IN-PLACE
REINFORCED CONCRETE
THREE SIDED CULVERT
143°00'00" SKEW

NOT TO SCALE

Florence & Hutcheson
CONSULTING ENGINEERS
3131 Ringdom Way, Suite 100 Raleigh, NC 27607
NC License No: F-0258

NORTH CAROLINA PROFESSIONAL SEAL 20532 JAMES E. MONDOLFI
3/26/10

REVISIONS								
NO.	BY	DATE	NO.	BY	DATE	SHEET NO.	TOTAL SHEETS
1			3			3	17
2			4				

DRAWN BY: K.M. MORLEY DATE: NOV.2009
CHECKED BY: J.E. MONDOLFI DATE: NOV. 2009

FILE NMCS p:\cons\d-f\florence_&_hutcheson\48-a\48_PLAN.dgn
PLOT: 3/26/2010 10:17:02 AM by k. Alexander, P.E.

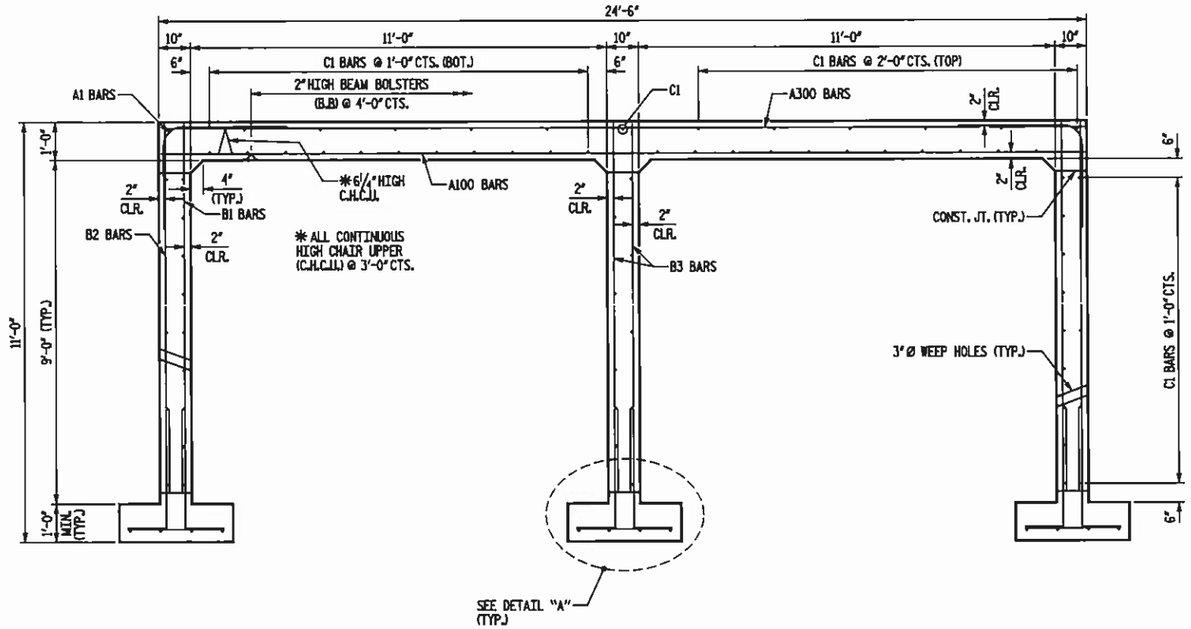

RIGHT ANGLE SECTION OF BARREL

THERE ARE 68 "C" BARS IN SECTION OF BARREL.
(LOOKING UPSTREAM)

BAR TYPES

BAR DIMENSIONS ARE OUT TO OUT.

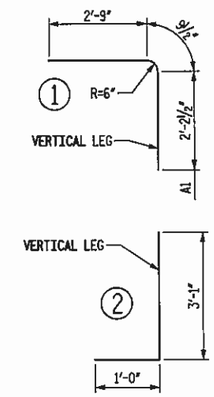

SPLICE LENGTH CHART

BAR	SIZE	SPLICE LENGTH
B1 OR B2	5	2'-2"
B3	4	1'-9"
C1	4	1'-11"

REINFORCING STEEL BAR SCHEDULE

LOCATION		BAR	NO.	SIZE	TYPE	LENGTH	WEIGHT	H LEG	V LEG
TOP SLAB POSV	MAIN	A100	119	5	STR	24'-1"	2989		
TOP SLAB POSV	CUTS	A101	8	5	STR	22'-6"	188		
		A102	8	5	STR	21'-0"	175		
		A103	8	5	STR	19'-6"	163		
		A104	8	5	STR	18'-0"	150		
		A105	8	5	STR	16'-6"	138		
		A106	8	5	STR	15'-0"	125		
		A107	8	5	STR	13'-6"	113		
		A108	8	5	STR	12'-0"	100		
		A109	8	5	STR	10'-6"	88		
		A110	8	5	STR	9'-0"	75		
		A111	8	5	STR	7'-6"	63		
		A112	8	5	STR	5'-11"	49		
		A113	8	5	STR	4'-5"	37		
		A114	8	5	STR	2'-11"	24		
TOP SLAB NEGV	MAIN	A300	119	6	STR	24'-1"	4305		
TOP SLAB NEGV	CUTS	A301	8	6	STR	22'-6"	270		
		A302	8	6	STR	21'-0"	252		
		A303	8	6	STR	19'-6"	234		
		A304	8	6	STR	18'-0"	216		
		A305	8	6	STR	16'-6"	198		
		A306	8	6	STR	15'-0"	180		
		A307	8	6	STR	13'-6"	162		
		A308	8	6	STR	12'-0"	144		
		A309	8	6	STR	10'-6"	126		
		A310	8	6	STR	9'-0"	108		
		A311	8	6	STR	7'-6"	90		
		A312	8	6	STR	5'-11"	71		
		A313	8	6	STR	4'-5"	53		
		A314	8	6	STR	2'-11"	35		
CORNER (TOP)		A1	380	5	1	5'-9"	2279	2'-9"	2'-2½"
EXTWALL IN		B1	238	4	STR	9'-6"	1510		
EXTWALL OUT		B2	374	5	STR	8'-9"	3413		
INTWALL		B3	254	4	STR	9'-6"	1612		
LONGTD (4)		C1	272	4	STR	25'-6"	4633		
DOWEL		D1	866	5	2	4'-1"	3688		
FTG LONGTD (2)		F1	24	5	STR	48'-6"	1214		
FTG TRANSVERSE		F2	297	5	STR	2'-6"	774		
HEADWL (1)		G1	8	5	STR	40'-1"	334		
ENDS (1)		S2	6	8	STR	40'-1"	642		
					REINFORCING STEEL		31,020 LBS.		

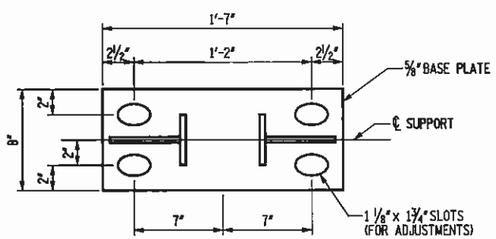

NOTES:
ANCHOR BOLTS, NUTS, AND WASHERS SHALL BE ¾" OR 1" DIA. AND MEET THE REQUIREMENTS OF ASTM A325. BOLTS, NUTS, AND WASHERS SHALL BE GALVANIZED.

PAYMENT FOR GUARDRAIL, POSTS, BASE PLATES, ANCHOR BOLTS, NUTS, WASHERS, AND CONCRETE ANCHORS SHALL BE INCLUDED IN THE PRICE BID FOR GUARDRAIL.

PLAN

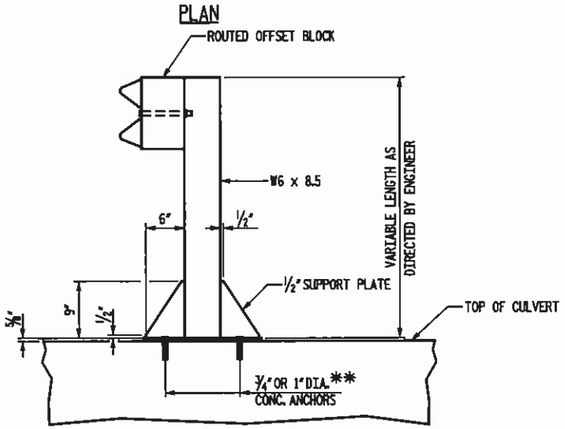

ELEVATION

ANCHORAGE FOR GUARDRAIL

**LOCATION OF CONCRETE FOR GUARDRAIL ANCHORAGE SHALL BE FURNISHED BY FIELD ENGINEER.

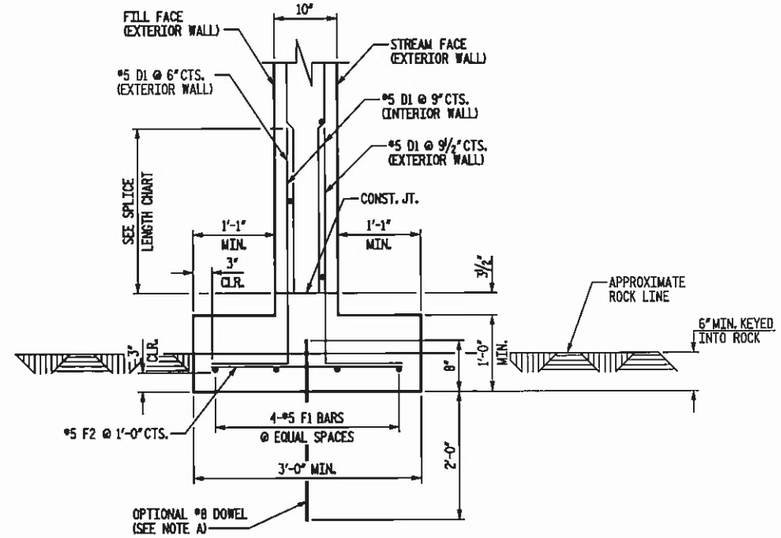

DETAIL "A"

NOTE A:
CONTRACTOR SHALL HAVE THE OPTION NOT TO KEY THE FOOTING INTO ROCK. IN THIS CASE, CONTRACTOR SHALL PLACE VERTICAL DOWELS WITH #8 STEEL BARS AT 4' SPACES TO BE EMBEDDED 24" INTO ROCK AND 8" INTO THE BOTTOM OF FOOTINGS. PAYMENT FOR THE DOWELS SHALL BE INCLUDED IN THE LUMP SUM BID FOR EXCAVATION AND EMBANKMENT. THE COST OF KEYING FOOTING INTO ROCK SHALL BE INCLUDED IN THE LUMP SUM PAYMENT FOR EXCAVATION AND EMBANKMENT. CONTRACTOR SHALL MAINTAIN A 1'-0" MINIMUM DEPTH FOOTING.

TOTAL STRUCTURE QUANTITIES

CLASS A CONCRETE			
BARREL & FTGS. @ 2.082 CY/FT	197.8	C.Y.	
WINGS & HEADWALLS	39.9	C.Y.	
TOTAL	237.7	C.Y.	
REINFORCING STEEL			
BARREL & FOOTINGS	31,020	LBS.	
WINGS & HEADWALLS	2,516	LBS.	
TOTAL	33,536	LBS.	
CULVERT EXCAVATION	LUMP SUM		

PROJECT NO. 42827
COUNTY: ALEXANDER
STATION: 15+96.50
REPLACES BRIDGE NO. 48

STATE OF NORTH CAROLINA
DEPARTMENT OF TRANSPORTATION
RALEIGH

DOUBLE 11' x 9' CAST-IN-PLACE REINFORCED CONCRETE THREE SIDED CULVERT 143°00'00" SKEW

Florence & Hutcheson
CONSULTING ENGINEERS
5121 Kingdom Way, Suite 100 Raleigh, NC 27607
NC License No: F-0258

NORTH CAROLINA PROFESSIONAL SEAL ENGINEER JAMES E. MONDOLFI
3/26/10

REVISIONS						SHEET NO.
NO.	BY	DATE	NO.	BY	DATE	4
1			3			TOTAL SHEETS
2			4			17

NOT TO SCALE

DRAWN BY: B.R. LANNING DATE: NOV.2009
CHECKED BY: J.E. MONDOLFI DATE: NOV. 2009

FILE NAME: p:\cons\sd\d3\alexander_42827\sd3_bridge\structures\sd3_d14_TRdsgn
PLOT: 3/26/2010

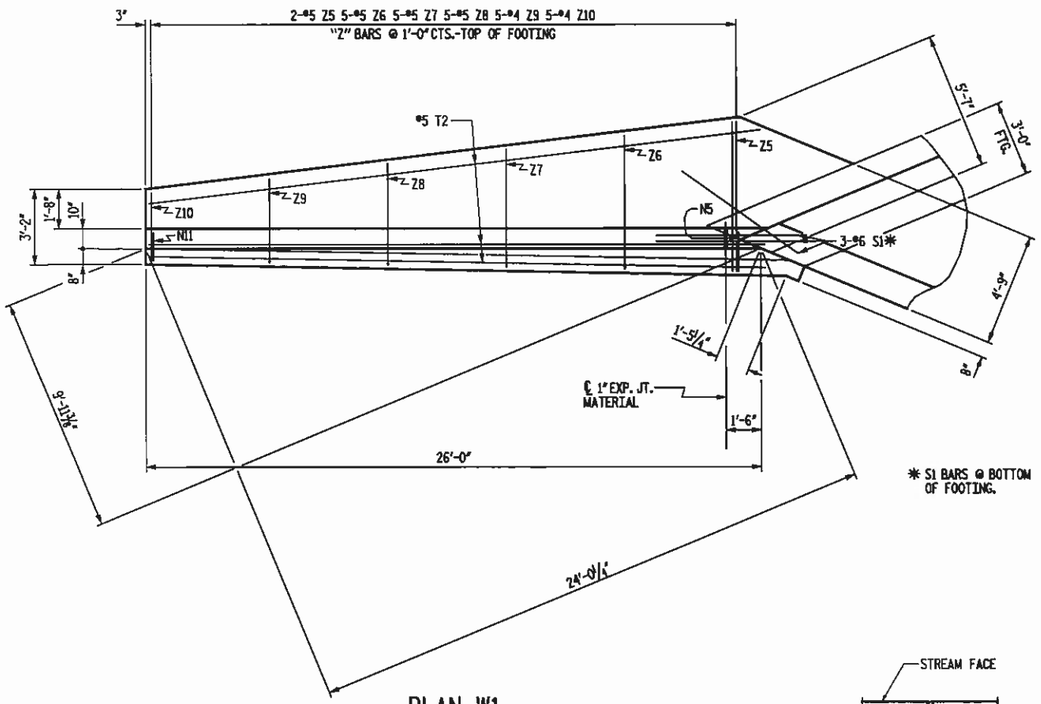

PLAN W1

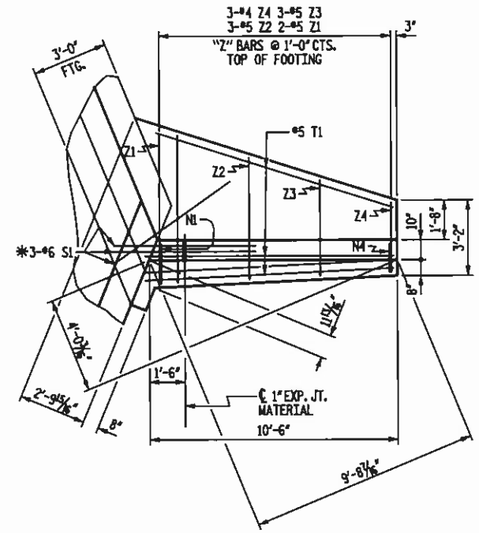

PLAN W2

* S1 BARS @ BOTTOM OF FOOTING.

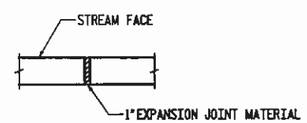

EXPANSION JOINT DETAIL

BAR TYPES

ALL BAR DIMENSIONS ARE OUT TO OUT.

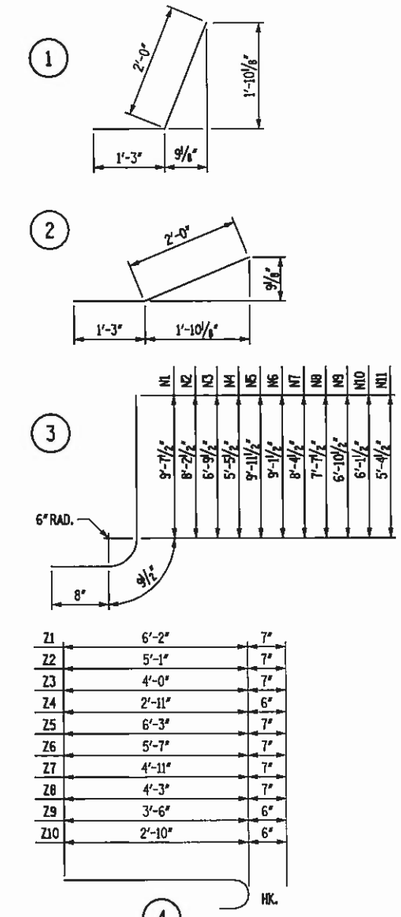

BILL OF MATERIAL

BAR	NO.	SIZE	TYPE	LENGTH	WEIGHT
H1	16	#4	STR	8'-7"	92
H2	4	#4	STR	5'-8"	15
H3	4	#4	STR	2'-6"	7
H4	28	#4	1	3'-3"	61
H5	4	#4	STR	9'-6"	25
H6	16	#4	STR	24'-1"	257
H7	4	#4	STR	16'-9"	45
H8	4	#4	STR	8'-10"	24
H9	28	#4	2	3'-3"	61
H10	4	#4	STR	24'-6"	65
N1	4	#6	3	11'-1"	67
N2	6	#6	3	9'-8"	87
N3	6	#5	3	8'-3"	52
N4	6	#4	3	6'-11"	28
N5	4	#6	3	11'-5"	69
N6	10	#6	3	10'-7"	159
N7	8	#6	3	9'-10"	118
N8	8	#5	3	9'-1"	76
N9	8	#5	3	8'-4"	70
N10	8	#5	3	7'-7"	63
N11	8	#4	3	6'-10"	37
S1	12	#6	STR	6'-0"	108
T1	6	#5	STR	10'-6"	66
T2	6	#5	STR	26'-0"	163
V1	4	#4	STR	9'-1"	24
V2	6	#4	STR	7'-8"	31
V3	6	#4	STR	6'-3"	25
V4	6	#4	STR	4'-10"	19
V5	4	#4	STR	9'-5"	25
V6	10	#4	STR	8'-6"	57
V7	8	#4	STR	7'-9"	41
V8	8	#4	STR	7'-0"	37
V9	8	#4	STR	6'-3"	33
V10	8	#4	STR	5'-6"	29
V11	8	#4	STR	4'-9"	25
Z1	4	#5	4	6'-9"	28
Z2	6	#5	4	5'-8"	35
Z3	6	#5	4	4'-7"	29
Z4	6	#4	4	3'-5"	14
Z5	4	#5	4	6'-10"	29
Z6	10	#5	4	6'-2"	64
Z7	10	#5	4	5'-6"	57
Z8	10	#5	4	4'-10"	50
Z9	10	#4	4	4'-0"	27
Z10	10	#4	4	3'-4"	22

REINFORCING STEEL FOR 4 WINGS	2516	LBS
CLASS A CONCRETE		
4 WINGS	36.1	CY
2 HEADWALLS	3.8	CY
TOTAL	39.9	CY

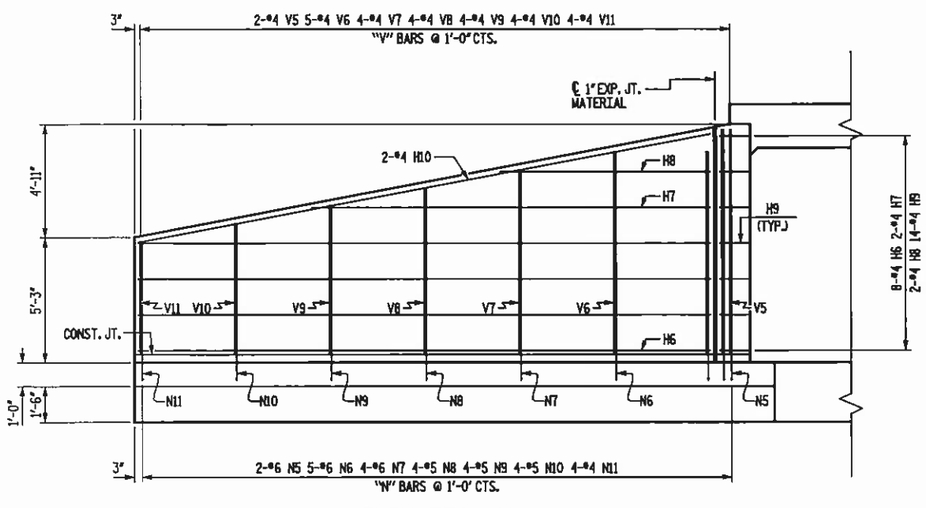

ELEVATION W1

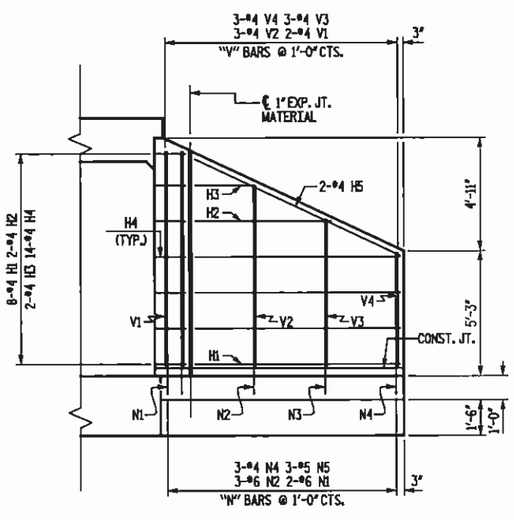

ELEVATION W2

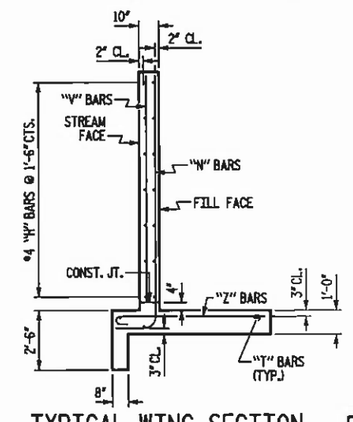

TYPICAL WING SECTION

NOT TO SCALE

PROJECT NO. 42827
COUNTY: ALEXANDER
STATION: 15+96.50
REPLACES BRIDGE NO. 48

STATE OF NORTH CAROLINA
DEPARTMENT OF TRANSPORTATION
RALEIGH

STANDARD WINGS FOR CONCRETE BOX CULVERT
H = 9'-0" SLOPE = 2:1
143°00'00" SKEW

Florence & Hutcheson
CONSULTING ENGINEERS
5131 Hedgecoxe Way, Suite 100 Raleigh, NC 27607
NC License No: F-0258

NORTH CAROLINA PROFESSIONAL SEAL 20532 JAMES E. MONDOLFI
3/26/10

REVISIONS						SHEET NO.
NO.	BY	DATE	NO.	BY	DATE	5
1			3			TOTAL SHEETS
2			4			17

DRAWN BY: B.R. LANNING DATE: NOV.2009
CHECKED BY: J.E. MONDOLFI DATE: NOV. 2009

DATUM DESCRIPTION

THE LOCALIZED COORDINATE SYSTEM DEVELOPED FOR THIS PROJECT IS BASED ON THE STATE PLANE COORDINATES ESTABLISHED BY OTHERS FOR MONUMENT "BL-4"
WITH NAD 83 STATE PLANE GRID COORDINATES OF
NORTHING: 603068.0582811 EASTING: 1394197.403011
THE AVERAGE COMBINED GRID FACTOR USED ON THIS PROJECT (GROUND TO GRID) IS: 0.9993556479
THE N.C. LAMBERT GRID BEARING AND LOCALIZED HORIZONTAL GROUND DISTANCE FROM "BL-4" TO -L- STATION 12+00 IS
S 14° 24' 05.9" W 88.79'
ALL LINEAR DIMENSIONS ARE LOCALIZED HORIZONTAL DISTANCES
VERTICAL DATUM USED IS NGVD 29

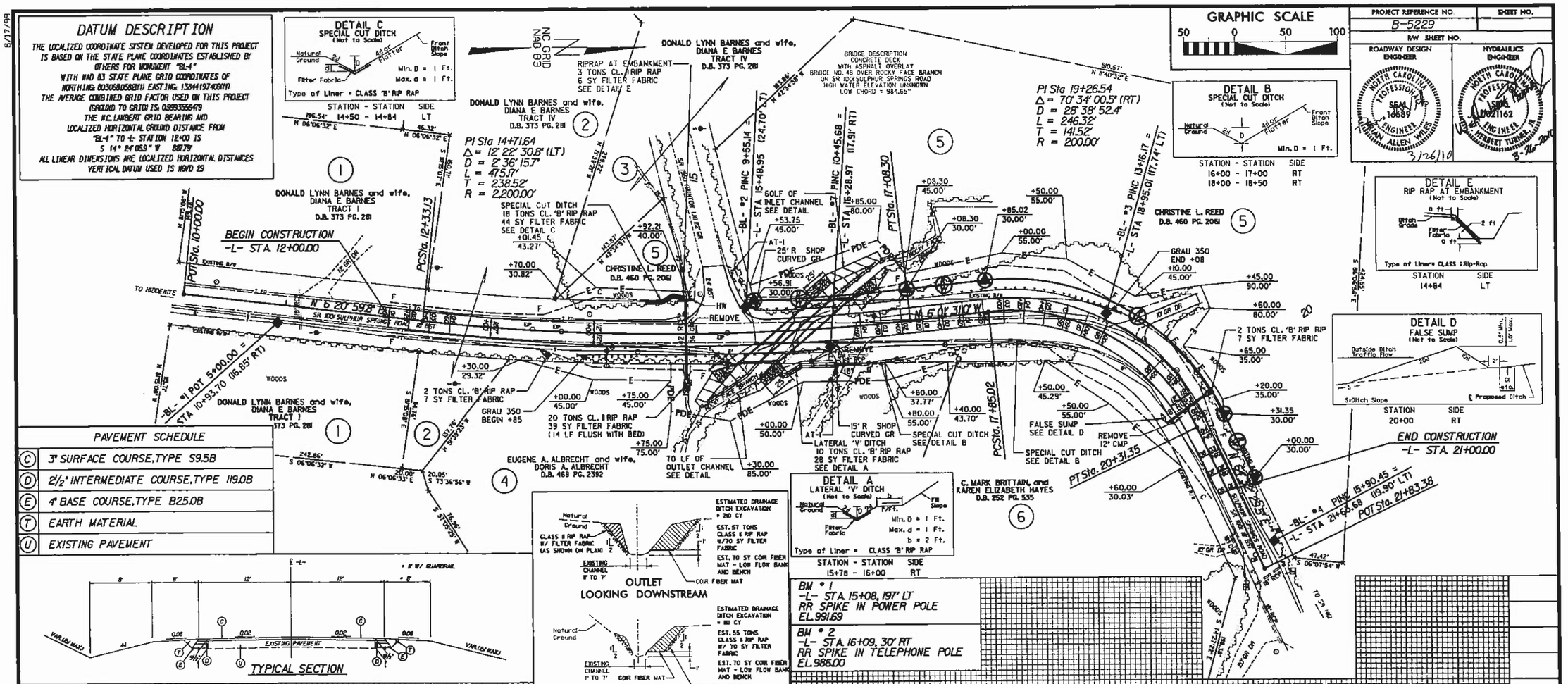

RIGHT OF WAY AREA DATA

PARCEL NO.	PROPERTY OWNERS NAME	TOTAL ACREAGE	AREA TAKEN	CONSTR. EASEMENT	PERMANENT DRAINAGE EASEMENT	TEMPORARY DRAINAGE EASEMENT
1	DONALD LYNN & DIANA E. BARNES TRACT I		0.00 AC	0.00 AC		
2	DONALD LYNN & DIANA E. BARNES TRACT I		0.00 AC	0.00 AC		
3	DONALD LYNN & DIANA E. BARNES TRACT IV		0.00 AC	0.00 AC		
4	EUGENE A. & DORIS A. ALBRECHT		0.00 AC	2,270 S.F.	0.16 AC	
5	CHRISTINE L. REED		0.08 AC	0.18 AC	0.11 AC	
6	C. MARK BRITTAIN & KAREN ELIZABETH HAYES		0.00 AC	2,455 S.F.		

PROJECT NO. 42827
COUNTY: ALEXANDER
STATION: 15+96.5
REPLACES BRIDGE NO. 48

STATE OF NORTH CAROLINA
DEPARTMENT OF TRANSPORTATION
RALEIGH

BRIDGE NO. 48 ON SR 1001 OVER ROCKY FACE BRANCH

Florence & Hutcheson
CONSULTING ENGINEERS
5121 Kingdom Way, Suite 100 Raleigh, NC 27607
NC License No. F-0258

REVISIONS						
NO.	BY	DATE	NO.	BY	DATE	
1			3			
2			4			

SHEET NO. 6
TOTAL SHEETS 17

PROJECT REFERENCE NO. B-5229
R/W SHEET NO.
ROADWAY DESIGN ENGINEER
HYDRAULICS ENGINEER

3/26/2010
R:\Roadway\Proj\M4128618_psh.dgn
Florence & Hutcheson, Inc.

PROJECT REFERENCE NO.	SHEET NO.
B-5229	7
R/W SHEET NO.	
ROADWAY DESIGN ENGINEER	HYDRAULICS ENGINEER

ENVIRONMENTALLY SENSITIVE AREA
SEE HIGH QUALITY WATERS PROJECT SPECIAL PROVISIONS

EROSION CONTROL PLAN

NOTE:
PLACE TEMPORARY ROCK SEDIMENT DAMS TYPE - B AND TEMPORARY ROCK SILT CHECKS TYPE - A AT DRAINAGE OUTLETS.

CLEARING AND GRUBBING EROSION CONTROL FOR CONSTRUCTION SHEET 04

ROADSIDE ENVIRONMENTAL UNIT
DEPARTMENT OF TRANSPORTATION
DIVISION OF HIGHWAYS
RALEIGH, N.C.

2006 STANDARD SPECIFICATIONS

NOTES: ANY DEVIATION FROM OPTIONS GIVEN WILL REQUIRE PRIOR APPROVAL BY ENGINEER.

ADDITIONAL EROSION CONTROL DEVICES MAY NEED TO BE INSTALLED AS DIRECTED BY THE ENGINEER.

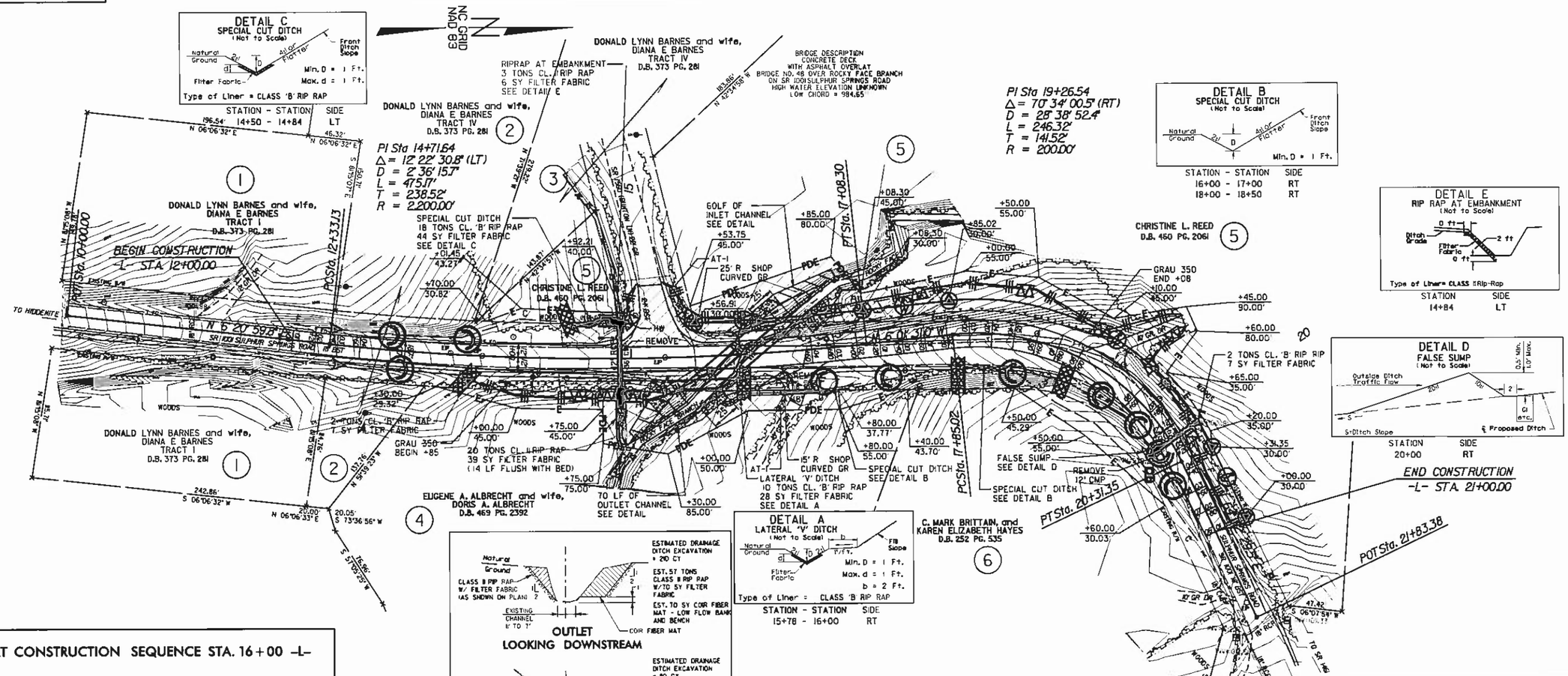

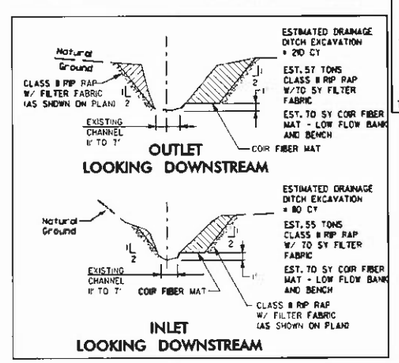

CULVERT CONSTRUCTION SEQUENCE STA. 16+00 -L-

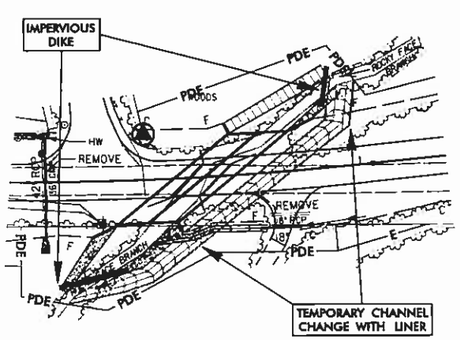

CULVERT CONSTRUCTION SEQUENCE STA. 16+00 -L-

1. INSTALL IMPERVIOUS DIKES AND TEMPORARY CHANNEL CHANGE WITH LINER(3 FT. BASE, 3 FT. DEPTH, 2:1 SIDELSOPES).
2. DEWATER SITE UTILIZING SPECIAL STILLING BASIN.
3. REMOVE EXISTING BRIDGE AND CONSTRUCT RCBC.
4. DIVERT FLOW THROUGH RCBC AND FILL TEMPORARY CHANNEL CHANGE WITH LINER.
5. COMPLETE ROADWAY CONSTRUCTION.

Std. #	Description	Symbol
1605.01	Temporary Silt Fence	
1606.01	Special Sediment Control Fence	
1607.01	Gravel Construction Entrance	
1622.01	Temporary Berms and Slope Drains	
1630.06	Special Stilling Basin	
1633.01	Temporary Rock Silt Check Type-A	
	Temporary Rock Silt Check Type-B	
	Wattle with Polyacrylamide (PAM)	
1635.02	Rock Pipe Inlet Sediment Trap Type-B	

EROSION CONTROL PLAN

PROJECT REFERENCE NO.	SHEET NO.
B-5229	8
R/W SHEET NO.	
ROADWAY DESIGN ENGINEER	HYDRAULICS ENGINEER

ROADSIDE ENVIRONMENTAL UNIT
DEPARTMENT OF TRANSPORTATION
DIVISION OF HIGHWAYS
RALEIGH, N.C.

2006 STANDARD SPECIFICATIONS

NOTES: ANY DEVIATION FROM OPTIONS GIVEN WILL REQUIRE PRIOR APPROVAL BY ENGINEER.

ADDITIONAL EROSION CONTROL DEVICES MAY NEED TO BE INSTALLED AS DIRECTED BY THE ENGINEER.

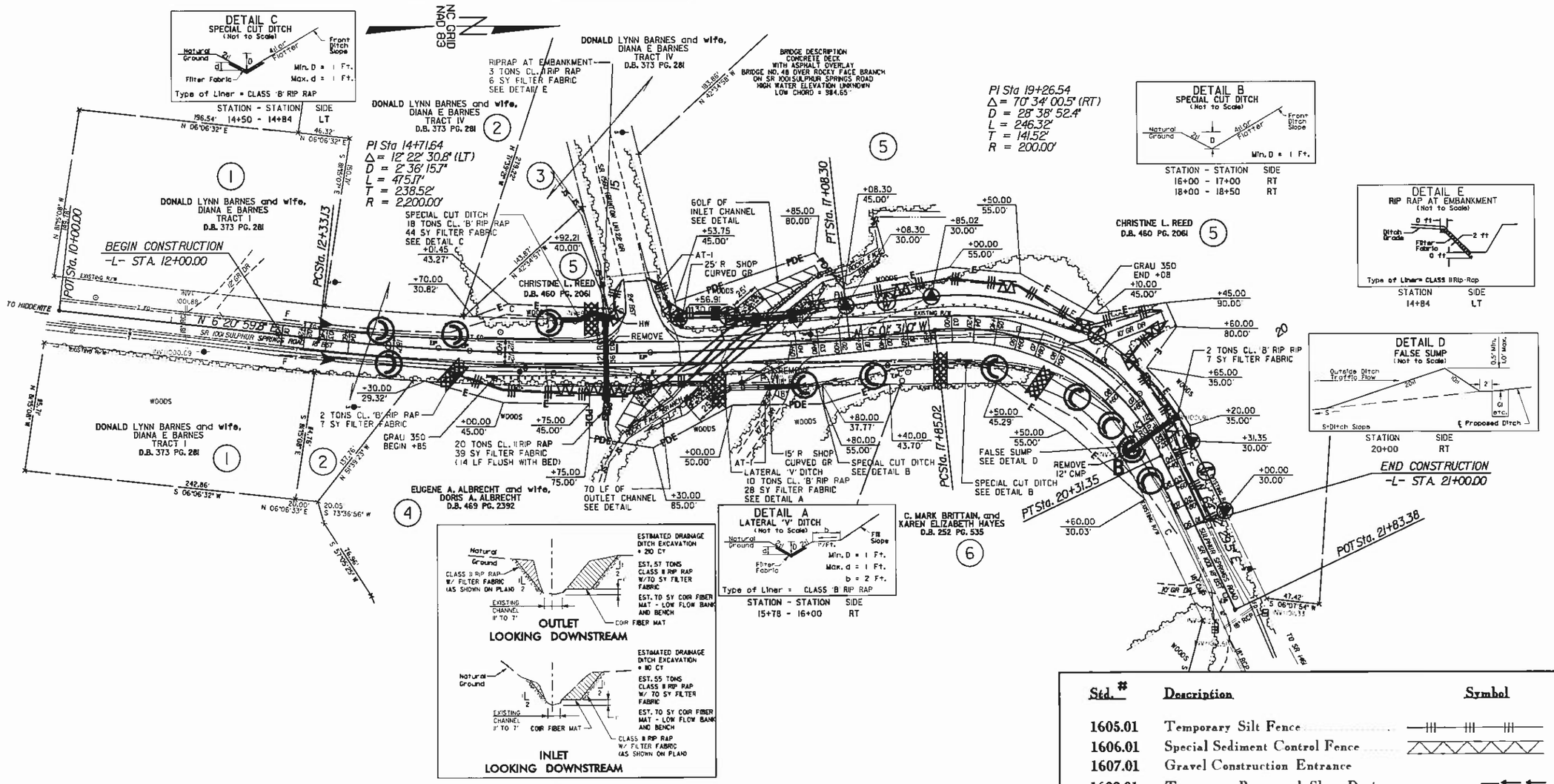

Std. #	Description	Symbol
1605.01	Temporary Silt Fence	
1606.01	Special Sediment Control Fence	
1607.01	Gravel Construction Entrance	
1622.01	Temporary Berms and Slope Drains	
1630.06	Special Stilling Basin	
1633.01	Temporary Rock Silt Check Type-A	
	Temporary Rock Silt Check Type-B	
	Wattle with Polyacrylamide (PAM)	
1635.02	Rock Pipe Inlet Sediment Trap Type-B	

PROJECT REFERENCE NO.	SHEET NO.
B-5229	9
R/W SHEET NO.	
ROADWAY DESIGN ENGINEER	HYDRAULICS ENGINEER

TEMPORARY ROCK SILT CHECK TYPE 'B' DETAIL

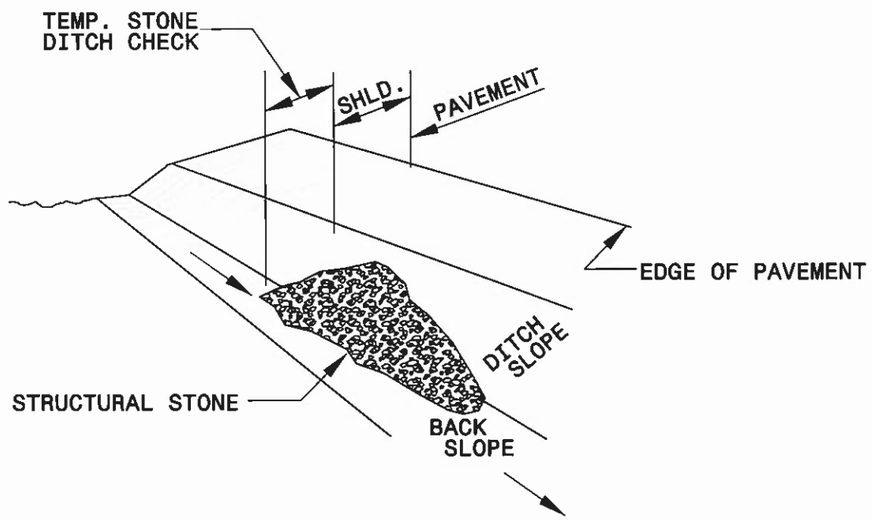

ISOMETRIC VIEW

NOTES:

USE CLASS 'B' EROSION CONTROL STONE FOR STRUCTURAL STONE.

THE ENGINEER MAY DIRECT THE OPTION OF CLASS "A" STONE FOR SITES HAVING LESS THAN ONE (1) ACRE DRAINAGE AREA AND A DITCH GRADE LESS THAN 3%.

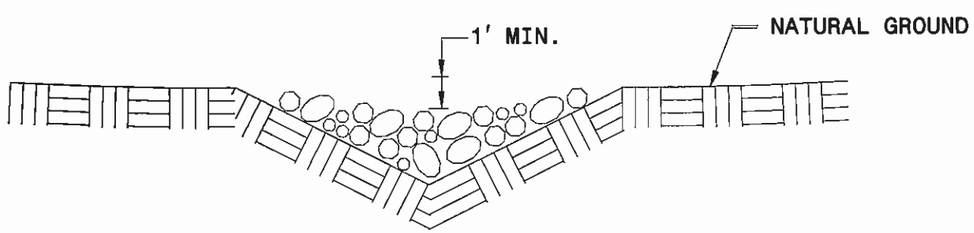

CROSS SECTION
VEE DITCH

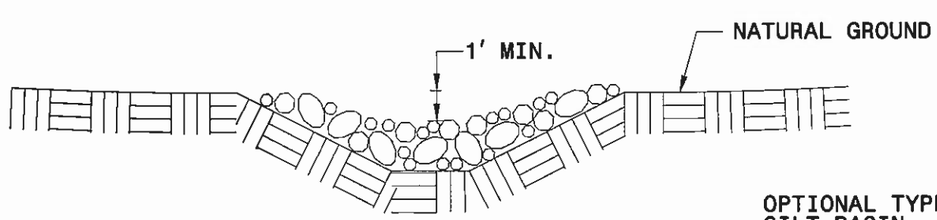

CROSS SECTION
TRAPEZOIDAL DITCH

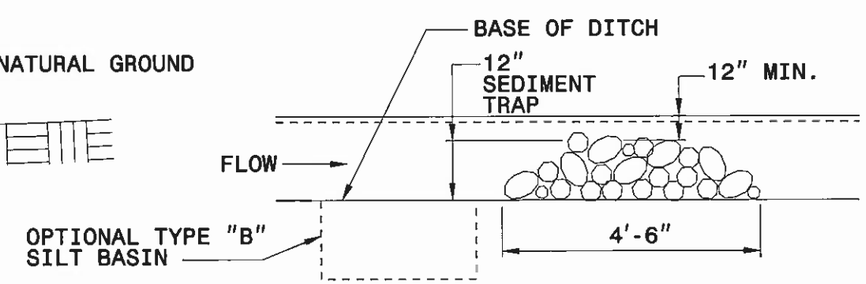

ELEVATION VIEW

PROJECT REFERENCE NO.	SHEET NO.
B-5229	10
R/W SHEET NO.	
ROADWAY DESIGN ENGINEER	HYDRAULICS ENGINEER

WATTLE WITH POLYACRYLAMIDE (PAM) DETAIL

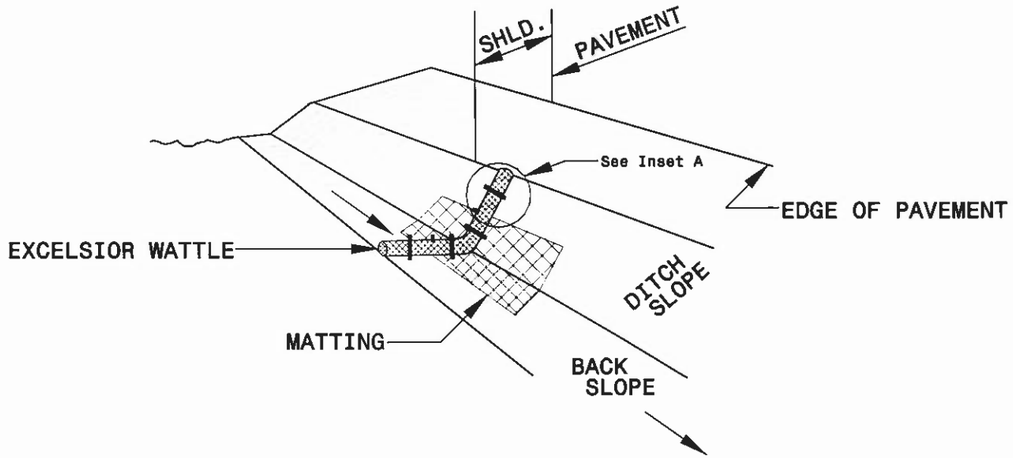

ISOMETRIC VIEW

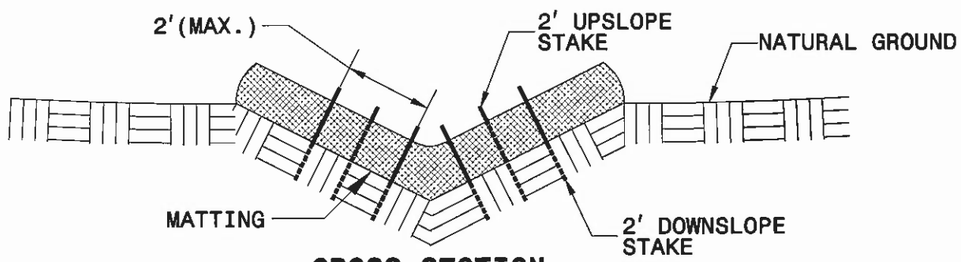

CROSS SECTION VEE DITCH

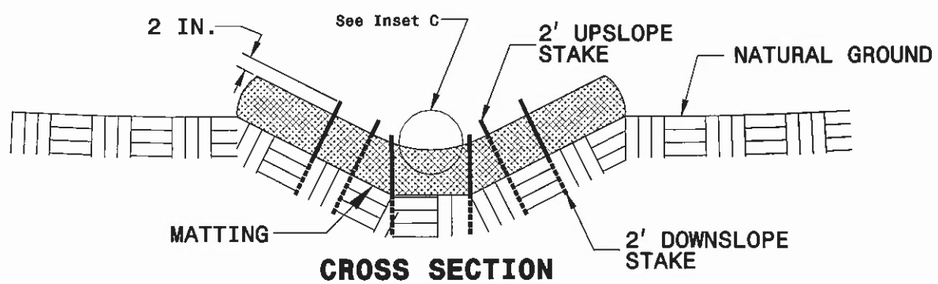

CROSS SECTION TRAPEZOIDAL DITCH

NOTES:

USE MINIMUM 12 IN. DIAMETER EXCELSIOR WATTLE.

USE 2 FT. WOODEN STAKES WITH A 2 IN. BY 2 IN. NOMINAL CROSS SECTION.

ONLY INSTALL WATTLE(S) TO A HEIGHT IN DITCH SO FLOW WILL NOT WASH AROUND WATTLE AND SCOUR DITCH SLOPES AND AS DIRECTED.

INSTALL A MINIMUM OF 2 UPSLOPE STAKES AND 4 DOWNSLOPE STAKES AT AN ANGLE TO WEDGE WATTLE TO BOTTOM OF DITCH.

PROVIDE STAPLES MADE OF 0.125 IN. DIAMETER STEEL WIRE FORMED INTO A U SHAPE NOT LESS THAN 12" IN LENGTH.

INSTALL STAPLES APPROXIMATELY EVERY 1 LINEAR FOOT ON BOTH SIDES OF WATTLE AND AT EACH END TO SECURE IT TO THE SOIL.

INSTALL MATTING IN ACCORDANCE WITH SECTION 1631 OF THE STANDARD SPECIFICATIONS.

PRIOR TO POLYACRYLAMIDE (PAM) APPLICATION, OBTAIN A SOIL SAMPLE FROM PROJECT LOCATION, AND FROM OFFSITE MATERIAL, AND ANALYZE FOR APPROPRIATE PAM FLOCCULANT TO BE APPLIED TO EACH WATTLE.

INITIALLY APPLY 2 OUNCES OF ANIONIC OR NEUTRALLY CHARGED PAM OVER WATTLE WHERE WATER WILL FLOW AND 1 OUNCE OF PAM ON MATTING ON EACH SIDE OF WATTLE. REAPPLY PAM AFTER EVERY RAINFALL EVENT THAT IS EQUAL TO OR EXCEEDS 0.50 IN.

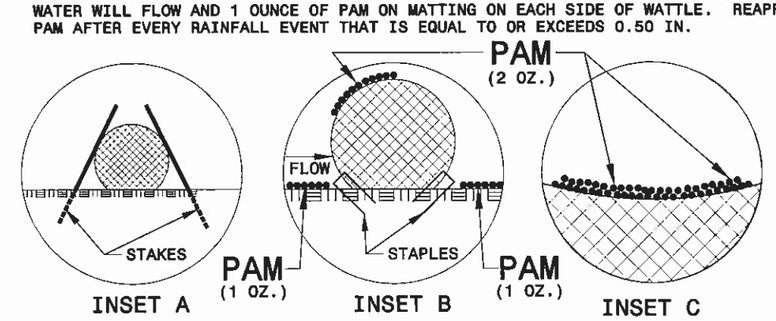

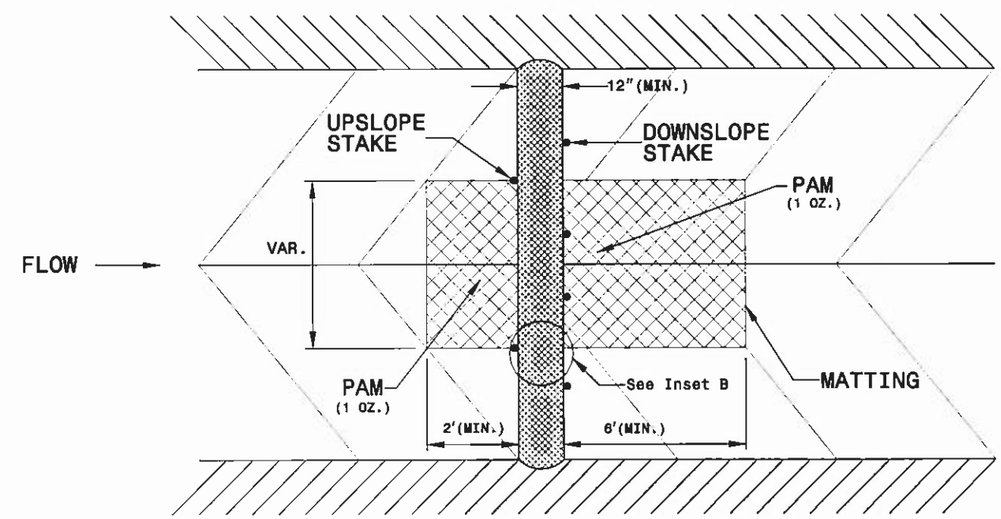

TOP VIEW

PROJECT REFERENCE NO.	SHEET NO.
B-5229	11
R/W SHEET NO.	
ROADWAY DESIGN ENGINEER	HYDRAULICS ENGINEER

MATTING INSTALLATION DETAIL

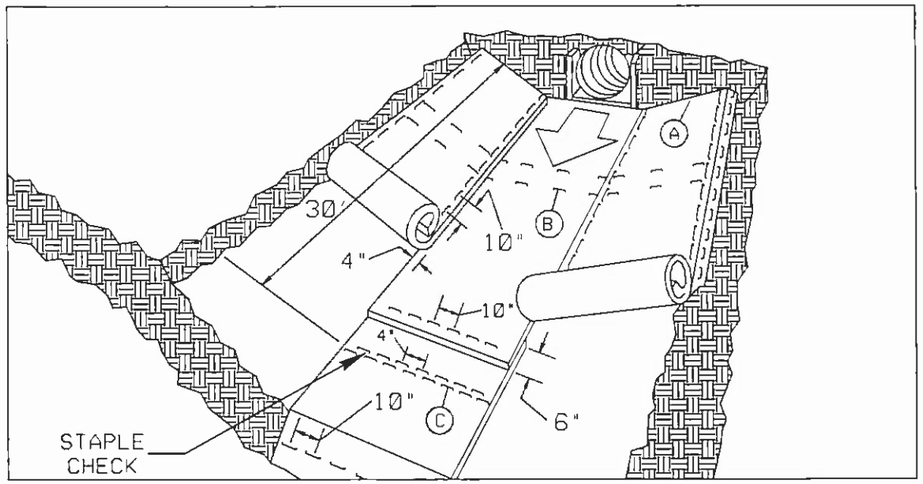

MATTING IN DITCHES

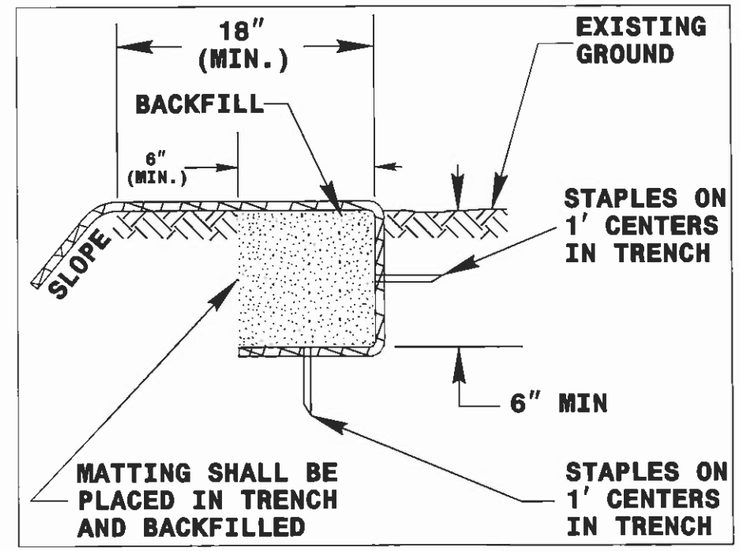

DIAGRAM (A)

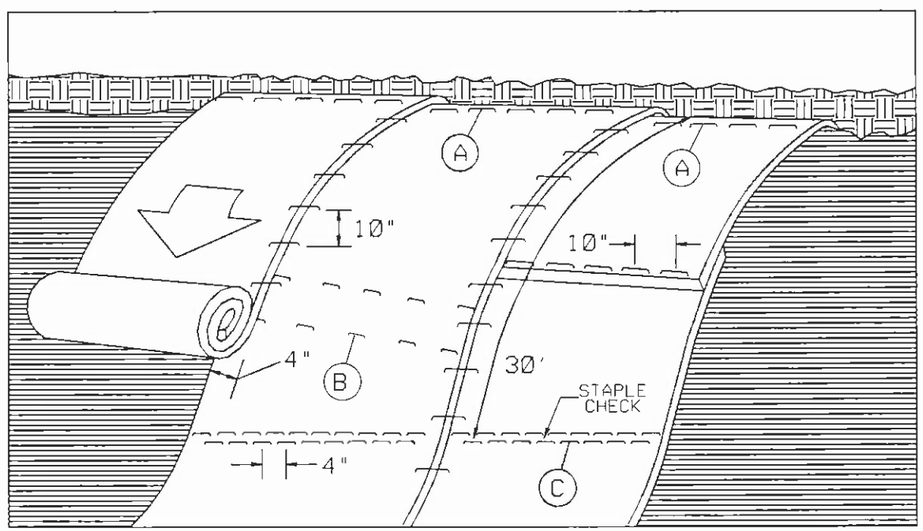

MATTING ON SLOPES

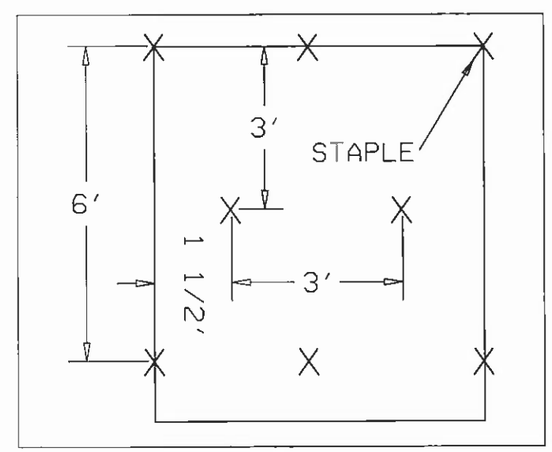

DIAGRAM (B)

STAPLE CHECK PATTERN

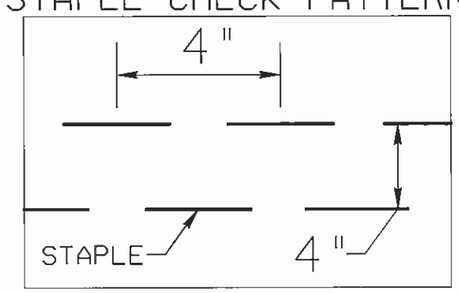

DIAGRAM (C)

NOTES:

THIS DETAIL APPLIES TO STRAW, EXCELSIOR, AND PERMANENT SOIL REINFORCEMENT MAT (PSRM) INSTALLATION.

STAPLES SHALL BE NO. 11 GAUGE STEEL WIRE FORMED INTO A "U" SHAPE WITH A MINIMUM THROAT WIDTH OF 1 INCH AND NOT LESS THAN 6 INCHES IN LENGTH.

NOT TO SCALE

PROJ. REFERENCE NO.	SHEET NO.
B-5229	12

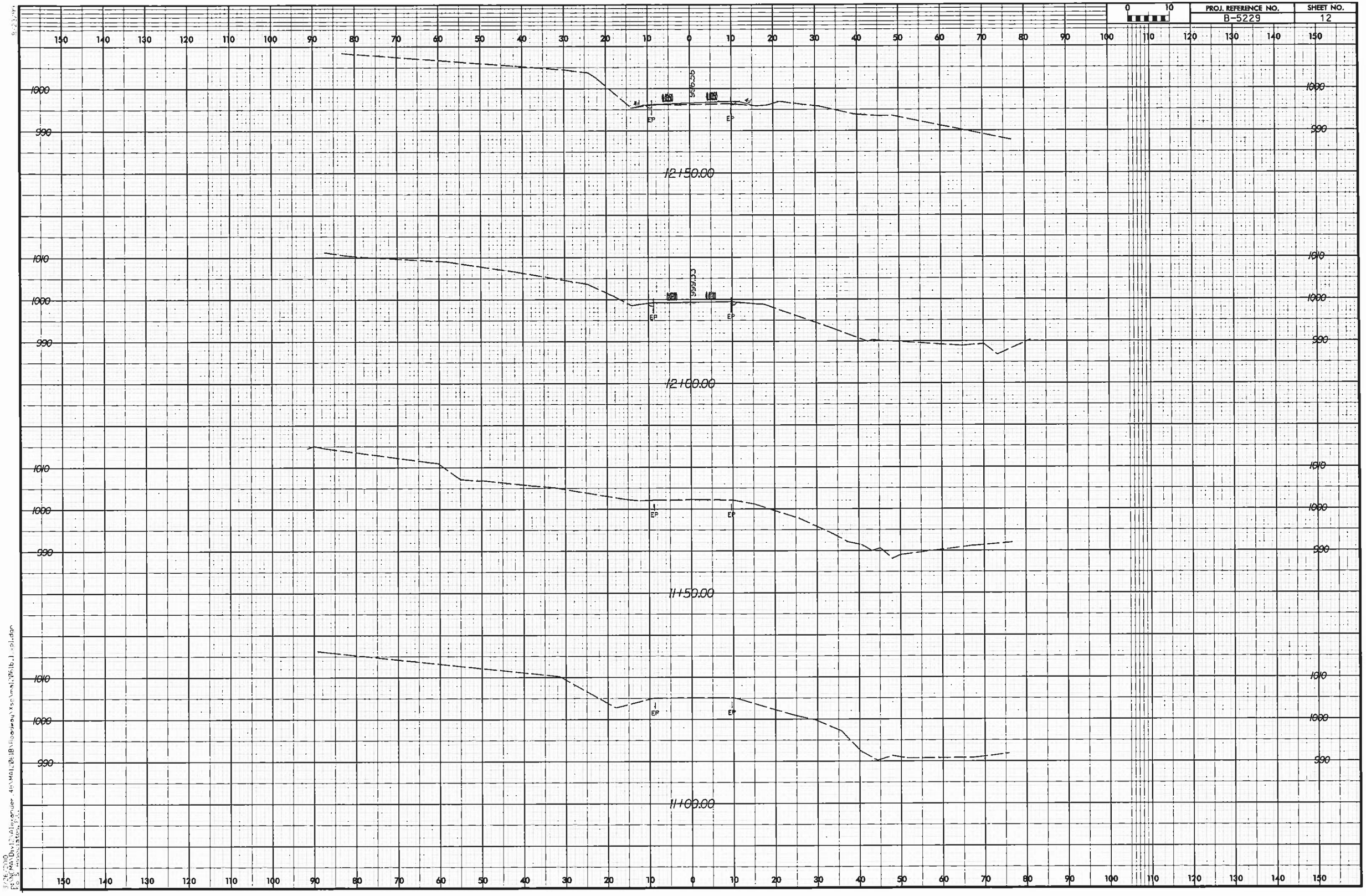

PROJ. REFERENCE NO.	SHEET NO.
B-5229	13

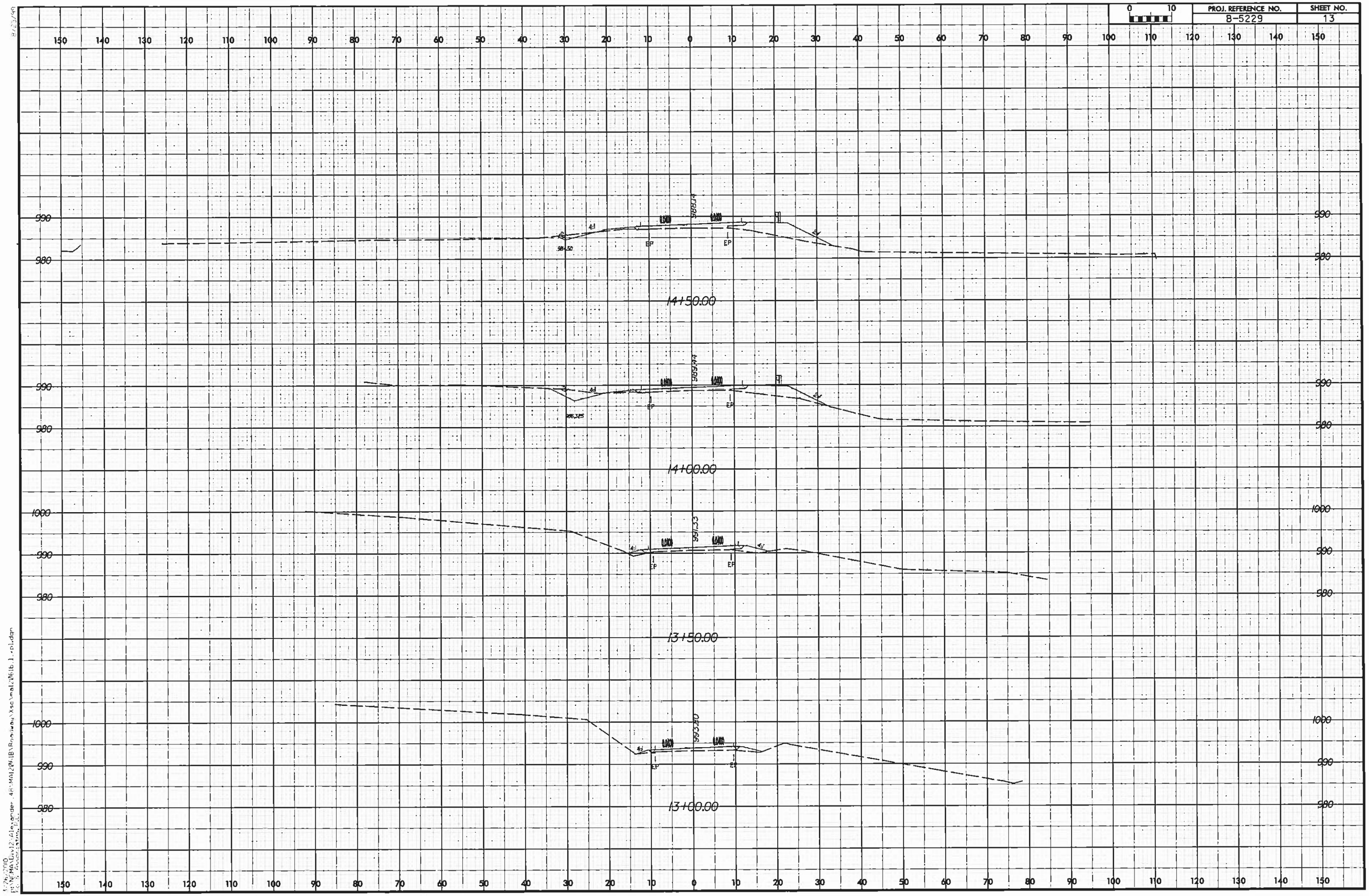

PROJ. REFERENCE NO.	SHEET NO.
B-5229	14

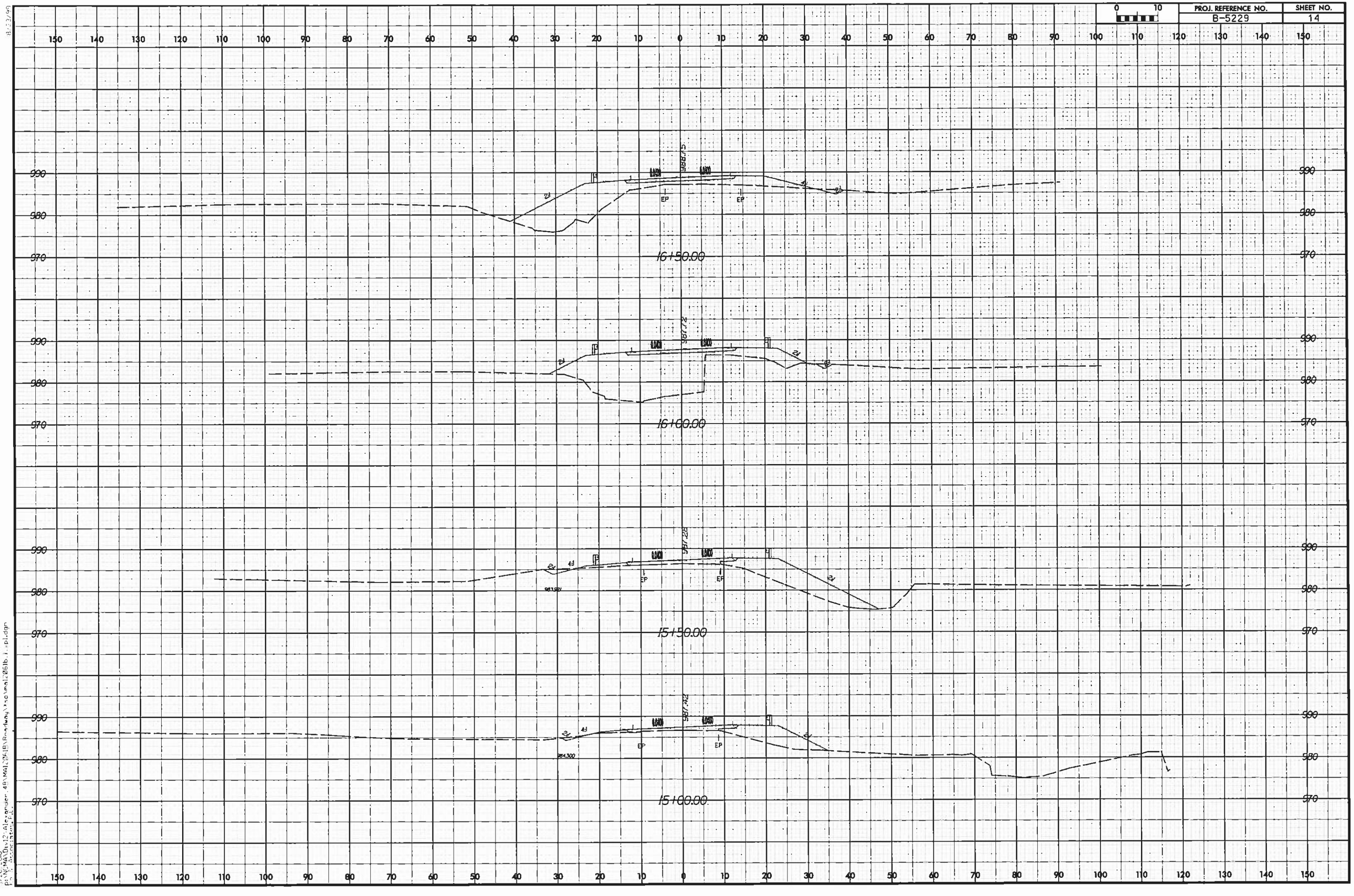

PROJ. REFERENCE NO.	SHEET NO.
B-5229	15

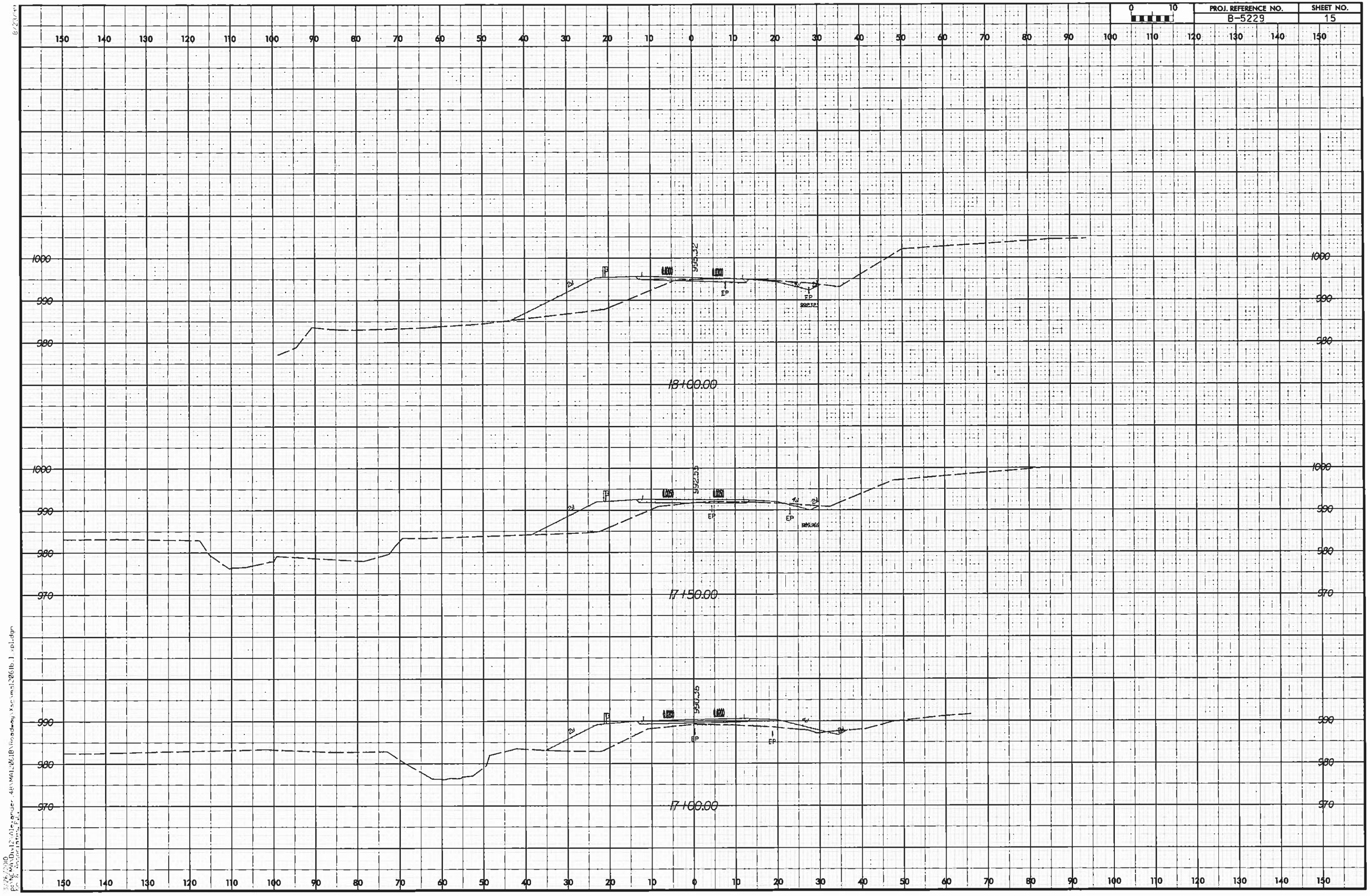

PROJ. REFERENCE NO.	SHEET NO.
B-5229	16

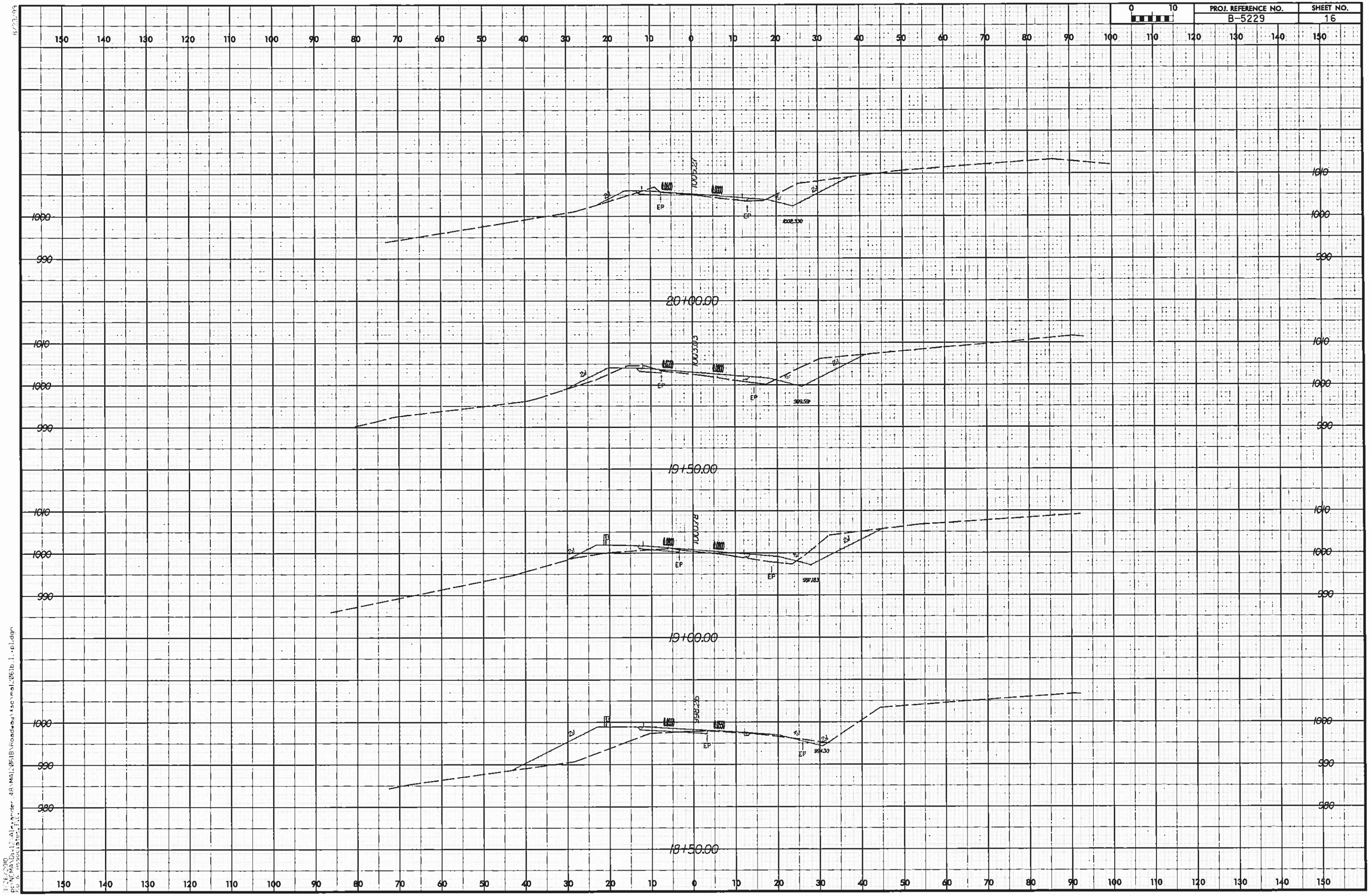
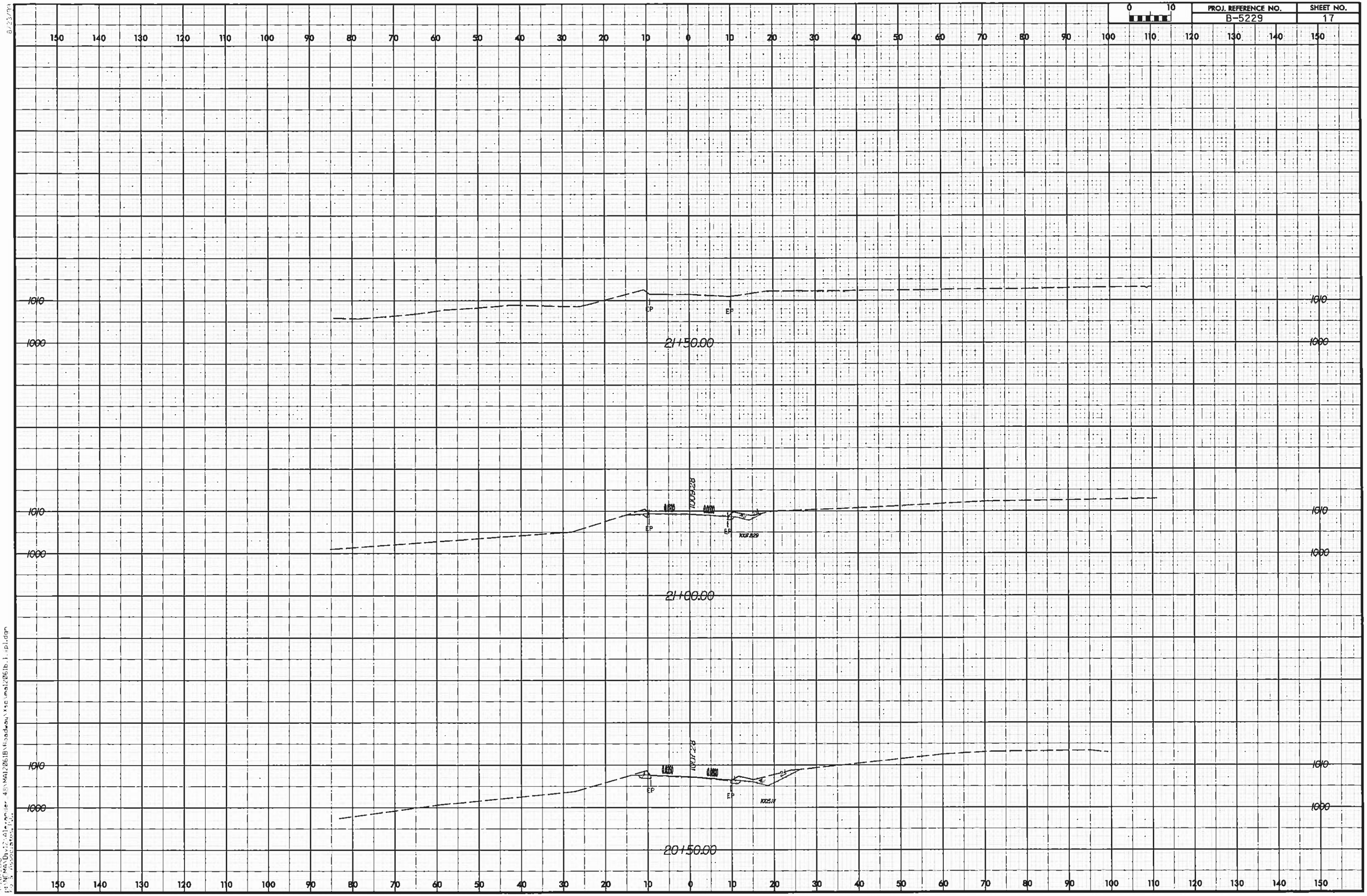
PROJ. REFERENCE NO.	SHEET NO.
B-5229	17