TIP PROJ. NO. BK-5115

34 STANLY COUNTY

B.M. #2 -R.R. SPIKE IN BASE OF 30" SWEET GUM 33.82' RT OF STA 15+25.06 ELEV. 580.18'

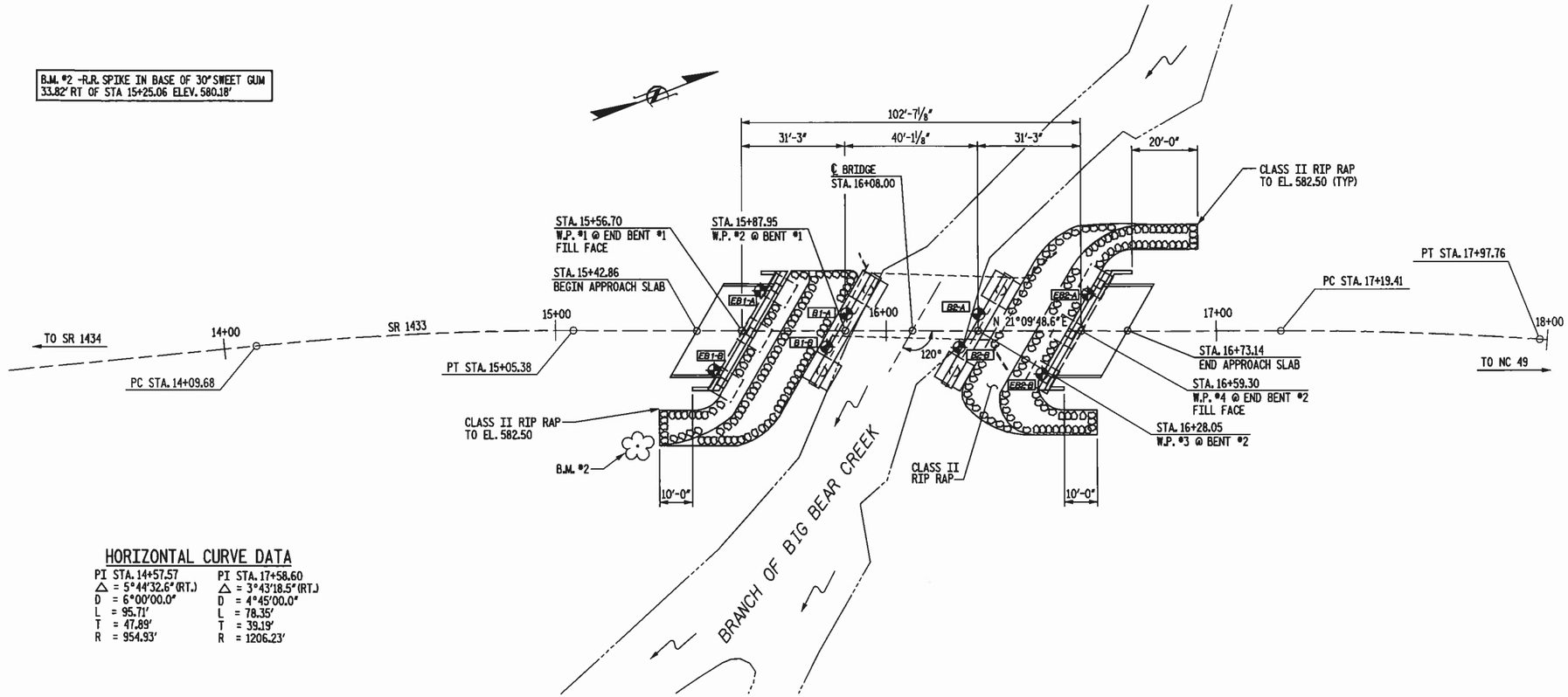

PLAN

SCALE: 1" = 20'-0"

HORIZONTAL CURVE DATA

PI STA. 14+57.57	PI STA. 17+58.60
△ = 5°44'32.6" (RT.)	△ = 3°43'18.5" (RT.)
D = 6°00'00.0"	D = 4°45'00.0"
L = 95.71'	L = 78.35'
T = 47.89'	T = 39.19'
R = 954.93'	R = 1206.23'

-6.000% -1.1915%

P.I. 15+05.00
EL. 586.85'
L = 90'

GRADE DATA

-1.1915% +0.8750%

P.I. 17+40.00
EL. 584.05'
L = 105'

GRADE DATA

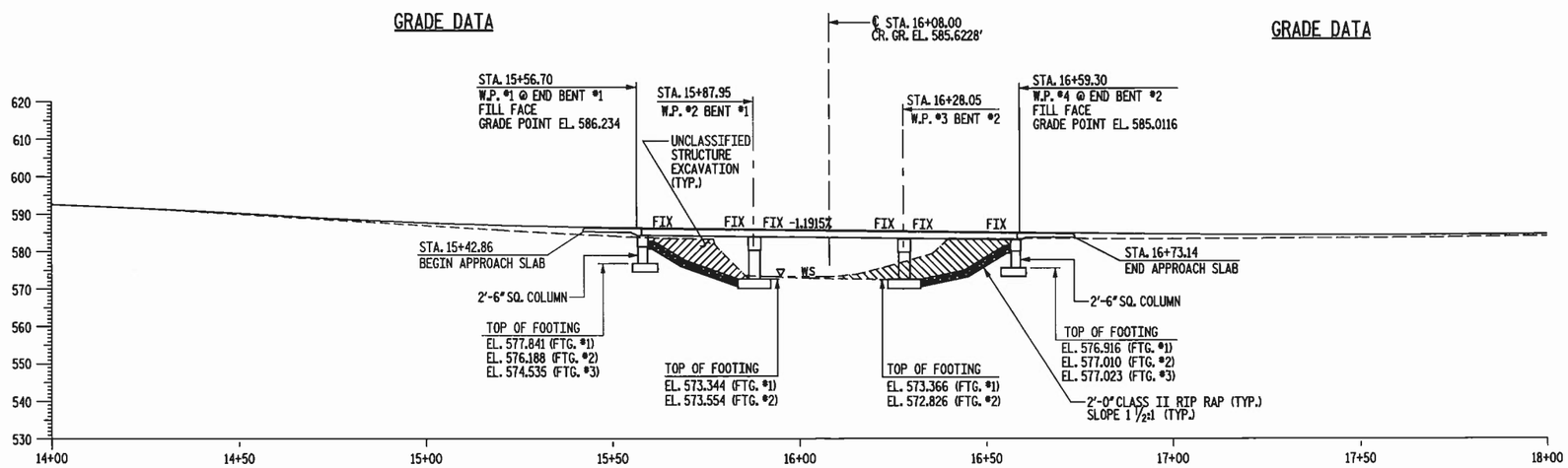

PROFILE ALONG ℄ SURVEY

SCALE: 1" = 20'-0"

NOTES

1. THE QUANTITY OF RIP RAP TO BE PAID FOR WILL BE THE ACTUAL NUMBER OF TONS OF EACH CLASS OF RIP RAP WHICH HAS BEEN INCORPORATED INTO THE COMPLETED AND ACCEPTED WORK. THE RIP RAP WILL BE MEASURED BY BEING WEIGHED IN TRUCKS ON CERTIFIED PLATFORM SCALES OR OTHER CERTIFIED WEIGHING DEVICES. THE QUANTITY OF RIP RAP WILL BE PAID FOR AT THE CONTRACT UNIT PRICE PER TON:

PLAIN RIP RAP CLASS II (2'-0" THICK)		FILTER FABRIC
END BENT NO. 1	200 TONS	190 SQUARE YARDS
END BENT NO. 2	170 TONS	160 SQUARE YARDS
TOTAL	370 TONS	350 SQUARE YARDS
CLASS B RIP RAP (1'-0" THICK)		
TOTAL	1 TON	4 SQUARE YARDS

2. THIS STRUCTURE HAS BEEN DESIGNED IN ACCORDANCE WITH FHWA'S TECHNICAL ADVISORY T5140.20 (SCOUR AT BRIDGES).
3. INASMUCH AS THE PAINT SYSTEM ON THE EXISTING STRUCTURAL STEEL CONTAINS LEAD, THE CONTRACTOR'S ATTENTION IS DIRECTED TO ARTICLE 107-1 OF THE STANDARD SPECIFICATIONS. ANY COST RESULTING FROM COMPLIANCE WITH APPLICABLE STATE OR FEDERAL REGULATIONS PERTAINING TO HANDLING OF MATERIALS CONTAINING LEAD BASED PAINT SHALL BE INCLUDED IN THE BID PRICE FOR "REMOVAL OF EXISTING STRUCTURE".
4. THE MATERIAL IN THE CROSS HATCHED AREA SHALL BE EXCAVATED FOR A DISTANCE OF 35 FEET EACH SIDE OF CENTERLINE ROADWAY AS DIRECTED BY THE ENGINEER. THIS WORK WILL BE PAID FOR AS "UNCLASSIFIED STRUCTURE EXCAVATION", LUMP SUM.
5. NO OTHER WAITING PERIOD WILL BE REQUIRED FOR THE APPROACH SLAB CONSTRUCTION AT END BENTS NO. 1 AND NO. 2.
6. TO PROVIDE PROTECTION FROM POSSIBLE SCOUR, THE FOOTINGS SHALL NOT BE CONSTRUCTED AT AN ELEVATION HIGHER THAN SHOWN ON THE PLANS.
7. THE SCOUR CRITICAL ELEVATIONS FOR BENT NO. 1 AND NO. 2 ARE THE BOTTOM FOOTING ELEVATIONS. THE SCOUR CRITICAL ELEVATIONS ARE FOR USE BY MAINTENANCE FORCES TO MONITOR POSSIBLE SCOUR PROBLEMS DURING THE LIFE OF THE STRUCTURE.
8. THE REQUIRED BEARING CAPACITY OF THE SPREAD FOOTINGS AT END BENTS NO. 1 AND NO. 2 AND INTERIOR BENTS NO. 1 AND NO. 2 IS 4 TSF. THE REQUIRED BEARING CAPACITY SHALL BE VERIFIED.
9. FOOTINGS SHALL BE KEYED AT LEAST 12 INCHES INTO ROCK WITH MINIMUM THICKNESS AS SHOWN ON THE PLANS.
10. CURRENT ADT = 200 VPD.
11. DELINEATORS ON BARRIER RAIL AND ON STEEL BEAM GUARDRAIL SHALL BE INCLUDED IN THE PRICE BID FOR STEEL BEAM GUARDRAIL.

◆ GEOTECH BORE HOLES LOCATION

DESCRIPTION OF EXISTING BRIDGE

2 SPANS - 1 SPAN @ 25'-5", 1 SPAN @ 25'-3½" 4" x 8" TIMBER FLOOR / 4" ASPHALT WEARING SURFACE; I-BEAMS ON TIMBER CAP, POSTS & SILL (END BENT 1), ON TIMBER CAPS & PILES (END BENT 2), TIMBER CAP, POSTS & CONCRETE SILL (INTERIOR BENT); 19'-2" CLEAR ROADWAY WIDTH SHALL BE REMOVED.

PROJECT NO. 42566
COUNTY: STANLY
STATION: 16+08.00
REPLACES BRIDGE NO. 34

STATE OF NORTH CAROLINA
DEPARTMENT OF TRANSPORTATION
RALEIGH

BRIDGE NO. 34 ON SR 1433 OVER BRANCH OF BIG BEAR CREEK

Florence & Hutcheson
CONSULTING ENGINEERS
5121 Kingdom Way, Suite 100 Raleigh, NC 27607
NC License No: F-0258

NORTH CAROLINA PROFESSIONAL SEAL 20532 ENGINEER JAMES E. MONDOLFI
7-18-11

REVISIONS						SHEET NO.
NO.	BY	DATE	NO.	BY	DATE	1
1			3			TOTAL SHEETS
2			4			27

DRAWN BY: D.H. CARTER DATE: JUNE 2009
CHECKED BY: J.E. MONDOLFI DATE: JUNE 2009

PLOT: 5/24/2011 10:35:57 AM Florence & Hutcheson, Inc. FILE NAME: P:\NCMA\DIV10\Stanly_34\MA10014B\Structures\bk5115_sd_gd.dgn

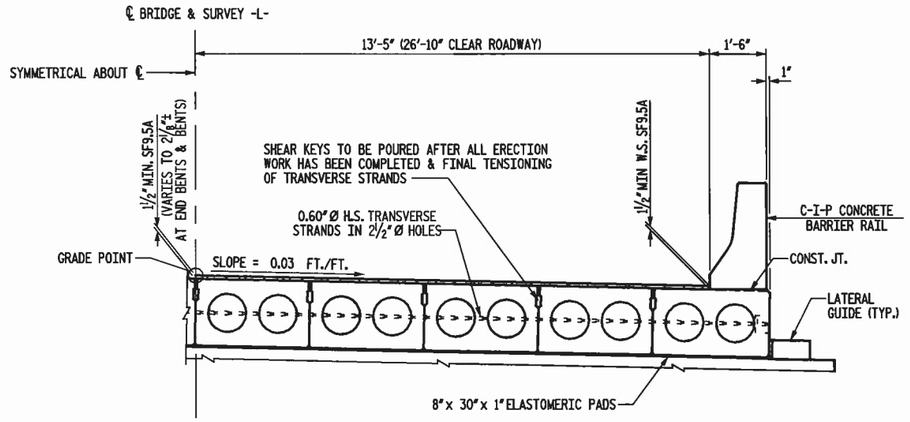

TYPICAL HALF SECTION

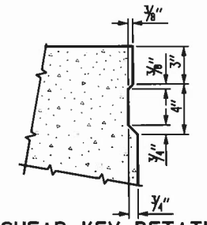

SHEAR KEY DETAIL

NOTE: OMIT SHEAR KEY ON OUTSIDE FACE OF EXTERIOR CORED SLABS.

GENERAL NOTES

ASSUMED LIVE LOAD = HS25 OR ALTERNATE LOADING.

CONCRETE: f'c = 5000 psi
** CONCRETE: f'c' = 4000 psi
** (COMPRESSIVE STRENGTH @ TRANSFER OF STRESSING FORCE.)

ALL PRESTRESS STRANDS SHALL BE 7 WIRE, LOW RELAXATION, HIGH STRENGTH CABLES IN ACCORDANCE WITH THE SPECIFICATIONS.

SIZE TYPE	AREA	ULTIMATE STR.
0.6" Ø HIGH STR.	0.217 □" PER CABLE	58,600#

APPLIED FORCE
43,950# PER CABLE

ALL MATERIAL AND WORKMANSHIP SHALL COMPLY WITH THE APPLICABLE REQUIREMENTS OF THE STANDARD SPECIFICATIONS FOR ROADS AND STRUCTURES OF THE NC DEPARTMENT OF TRANSPORTATION DATED JULY 2006 AND WITH THE SPECIAL PROVISIONS.

THE ULTIMATE STRENGTH OF THE CORED SLAB UNIT MUST MEET THE REQUIREMENTS OF THE APPLICABLE AASHTO SPECIFICATIONS.

STRANDS SHALL BE CUT FLUSH WITH ENDS OF SLABS AND EPOXY COATED.

A POSITIVE HOLD DOWN SYSTEM MUST BE EMPLOYED TO PREVENT VOIDS FROM RISING.

UNLESS OTHERWISE NOTED ON THE PLANS, ALL EXPOSED CORNERS ON STRUCTURES SHALL BE CHAMFERED ¾".

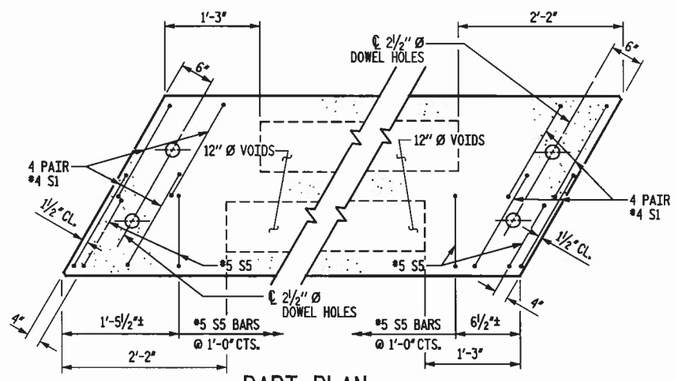

PART PLAN
EXTERIOR CORED SLAB

(FOR S2, S3 AND S4 BARS, SEE PART PLAN INTERIOR CORED SLAB)

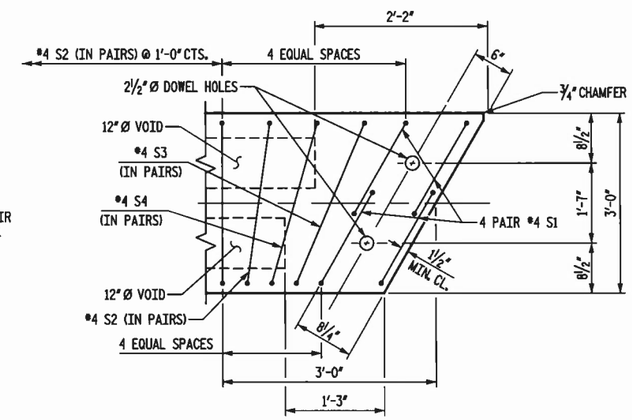

PART PLAN - INTERIOR CORED SLAB

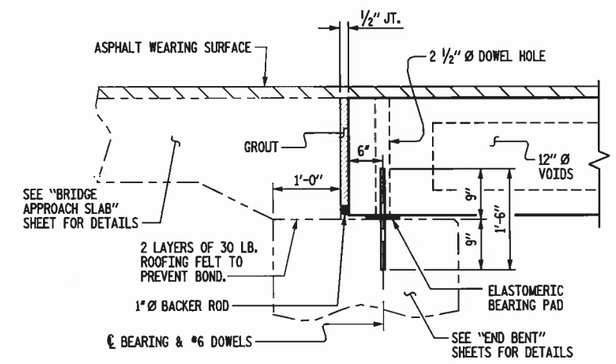

SECTION AT END BENT

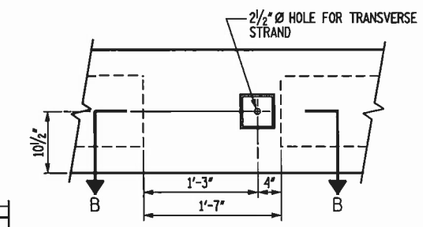

ELEVATION VIEW

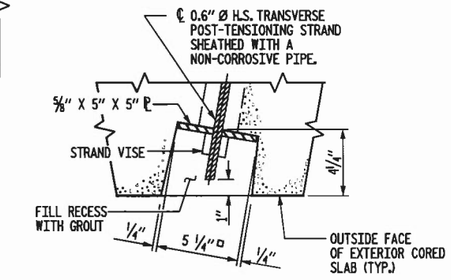

SECTION B-B
DETAIL "A"

GROUTED RECESS AT END OF POST-TENSIONED STRAND CORED SLABS

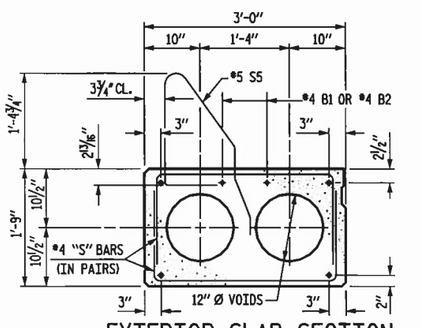

EXTERIOR SLAB SECTION

FOR PRESTRESSED STRAND LAYOUT, SEE INTERIOR SLAB SECTIONS

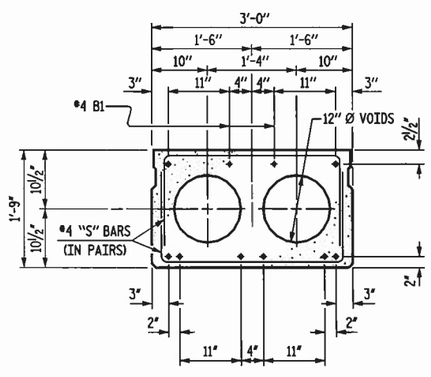

30' SPAN-INTERIOR SLAB SECTION

8 - 0.60" Ø LOW RELAXATION STRANDS

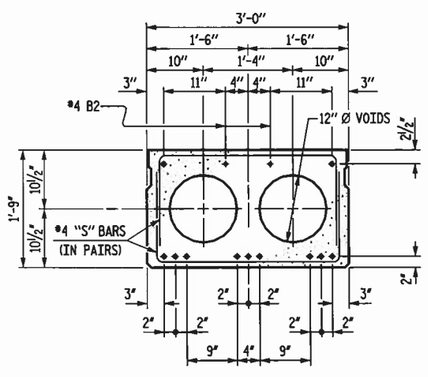

40' SPAN-INTERIOR SLAB SECTION

11 - 0.60" Ø LOW RELAXATION STRANDS

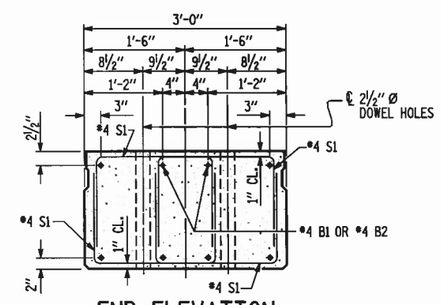

END ELEVATION

SHOWING PLACEMENT OF DOUBLE STIRRUPS AND LOCATION OF DOWEL HOLES.
(STRAND LAYOUT NOT SHOWN.)
INTERIOR SLAB SECTION SHOWN, EXTERIOR SLAB SECTION SIMILAR EXCEPT SHEAR KEY LOCATION.
THE 2½" DOWEL HOLES AT FIXED ENDS OF SLAB SECTIONS SHALL BE FILLED WITH GROUT.

NOT TO SCALE

PROJECT NO. 42566
COUNTY: STANLY
STATION: 16+08.00
REPLACES BRIDGE NO. 34

STATE OF NORTH CAROLINA
DEPARTMENT OF TRANSPORTATION
RALEIGH

STANDARD PRESTRESSED CORED SLAB
30' AND 40' SPANS
26'-10" CLEAR ROADWAY - 120° SKEW

Florence & Hutcheson
CONSULTING ENGINEERS
5121 Kingdom Way, Suite 100 Raleigh, NC 27607
NC License No: F-0258

NORTH CAROLINA PROFESSIONAL SEAL 20532 ENGINEER JAMES E. MONDOLFI
7-18-11

REVISIONS						SHEET NO.
NO.	BY	DATE	NO.	BY	DATE	2
1			3			TOTAL SHEETS
2			4			27

DRAWN BY: D.H. CARTER DATE: JUNE 2009
CHECKED BY: J.E. MONDOLFI DATE: JUNE 2009

FILE NAME: P:\NCDOT\Stanly_34\MASTER\Structure\bh3115_std.dgn
PLOT: 8/24/2011 1:56PM BY Florence & Hutcheson, Inc.

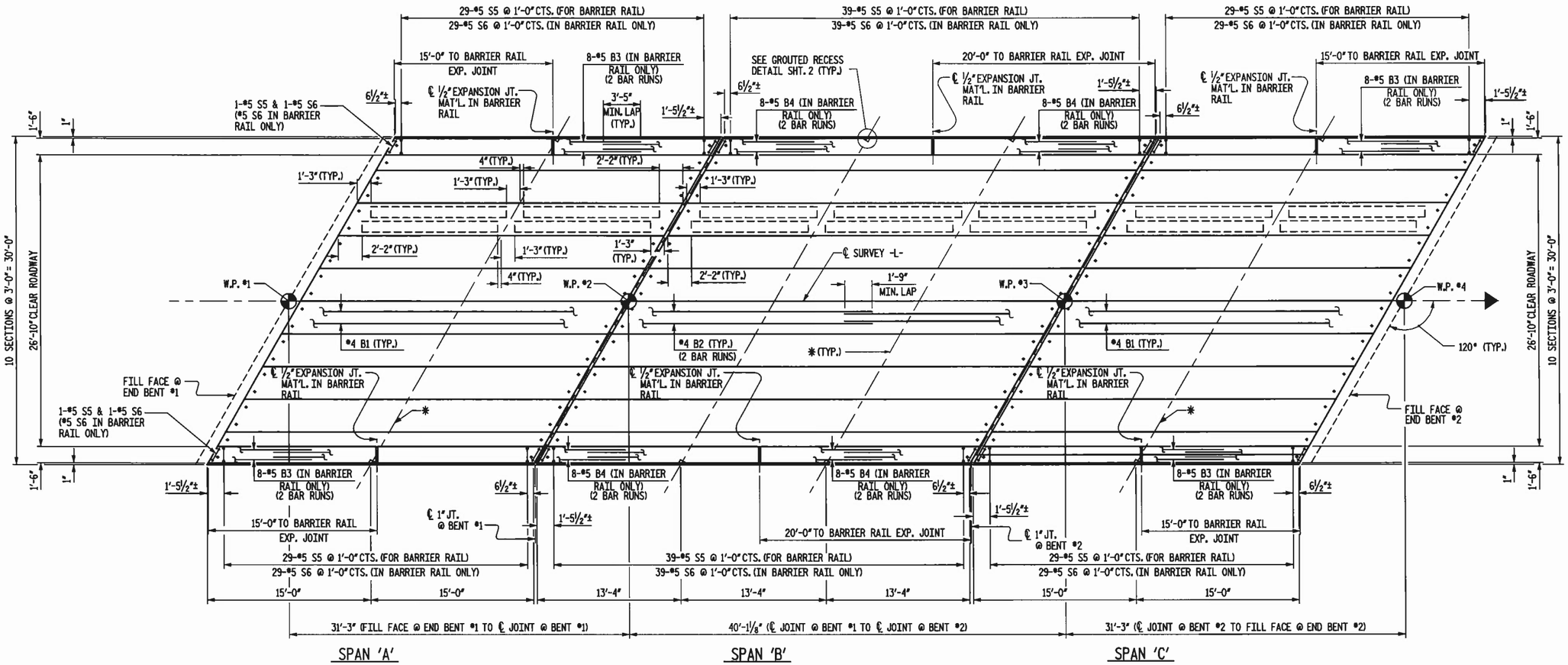

PLAN OF SPAN

* ℄ 0.6"Ø H.S. TRANSVERSE POST-TENSIONING STRAND IN 2 1/2"Ø HOLE (TYP.)

PROJECT NO. 42566
COUNTY: STANLY
STATION: 16+08.00
REPLACES BRIDGE NO. 34

STATE OF NORTH CAROLINA
DEPARTMENT OF TRANSPORTATION
RALEIGH

PLAN OF SPANS
CORED SLAB DETAILS
SPANS A, B & C

REVISIONS						SHEET NO.
NO.	BY	DATE	NO.	BY	DATE	3
1			3			TOTAL SHEETS
2			4			27

NOT TO SCALE

Florence & Hutcheson
CONSULTING ENGINEERS
5121 Kingdom Way, Suite 100 Raleigh, NC 27607
NC License No: F-0258

NORTH CAROLINA PROFESSIONAL SEAL 20532 ENGINEER JAMES E. MONDOLFI
7-18-11

DRAWN BY: D.H. CARTER DATE: JUNE 2009
CHECKED BY: J.E. MONDOLFI DATE: JUNE 2009

PLOT: 5/24/2011 1:45:57 AM Florence & Hutcheson, Inc.
FILE NAME: p:\roman\dsn\01\roman\p_34\roadway\bridge\structure-wide\WIDE01_sht_no2.dgn

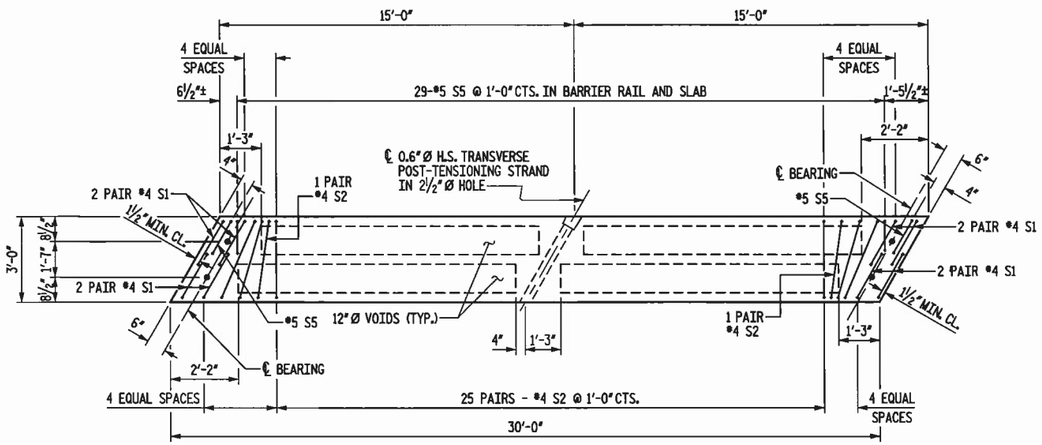

30' SPAN - PLAN OF EXTERIOR CORED SLAB UNIT

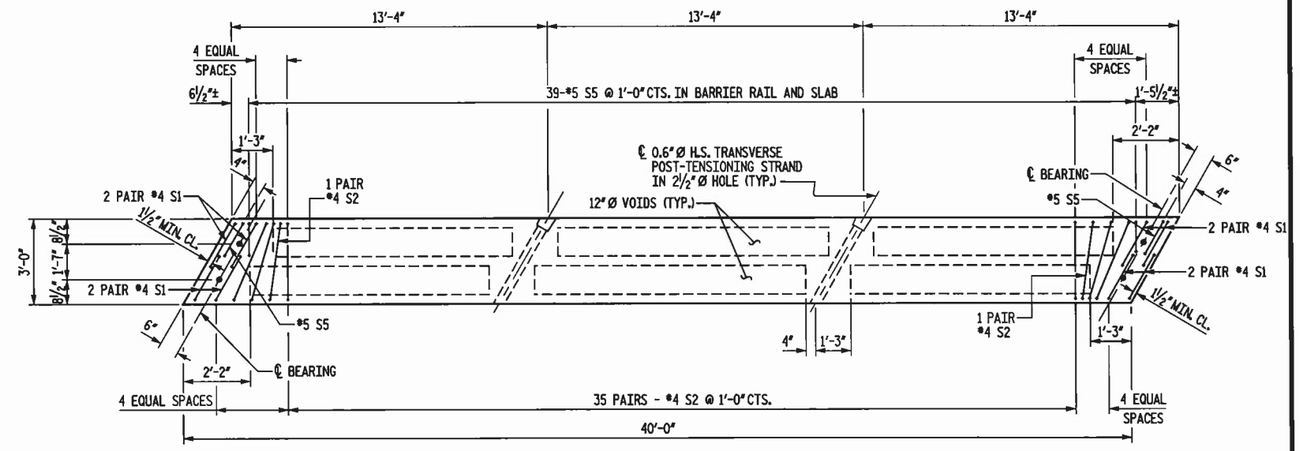

40' SPAN - PLAN OF EXTERIOR CORED SLAB UNIT

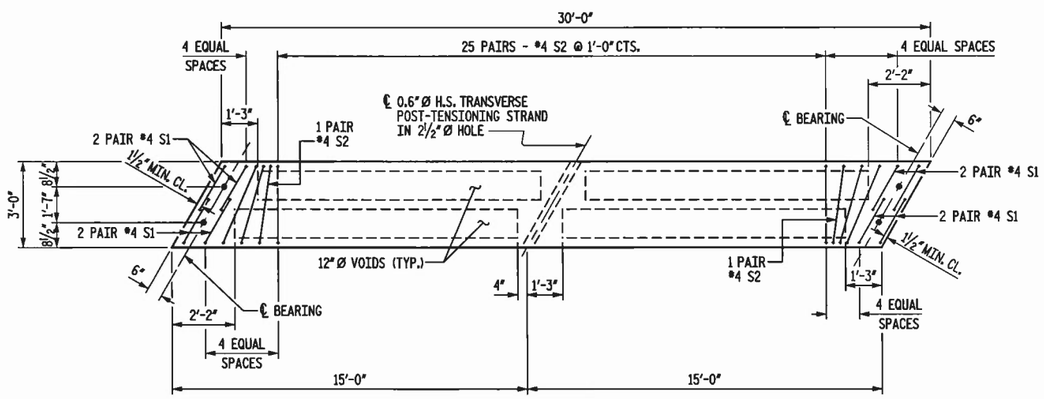

30' SPAN - PLAN OF INTERIOR CORED SLAB UNIT

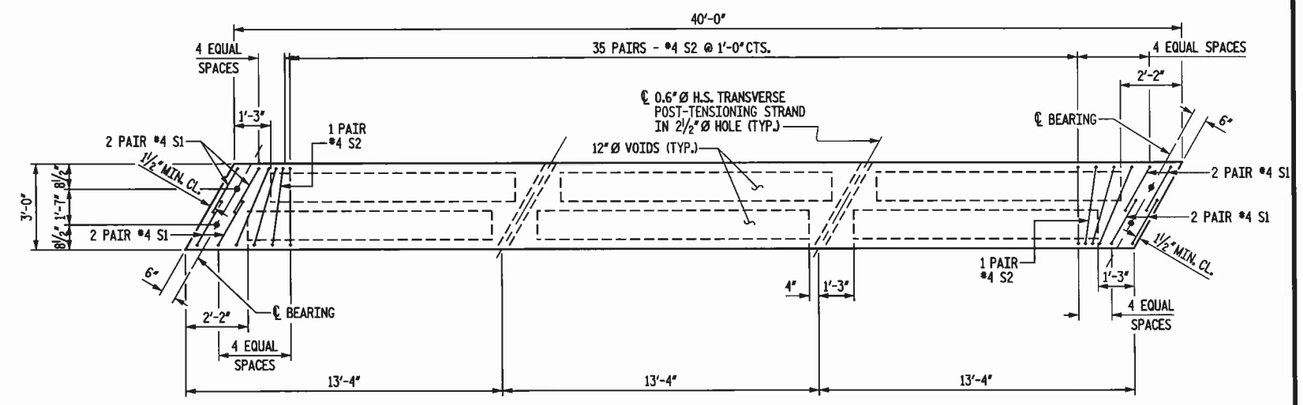

40' SPAN - PLAN OF INTERIOR CORED SLAB UNIT

NOTE: FOR PART PLAN SLAB, SEE SHEET 2.

PROJECT NO. 42566
COUNTY: STANLY
STATION: 16+08.00
REPLACES BRIDGE NO. 34

STATE OF NORTH CAROLINA
DEPARTMENT OF TRANSPORTATION
RALEIGH

3'-0" X 1'-9"
PRESTRESSED CORED SLAB UNIT
SPANS A, B AND C

REVISIONS						SHEET NO.
NO.	BY	DATE	NO.	BY	DATE	4
1			3			TOTAL SHEETS
2			4			27

NORTH CAROLINA PROFESSIONAL SEAL 20520 JAMES E. MONDOLFI
7-18-11

Florence & Hutcheson
CONSULTING ENGINEERS
5121 Kingdom Way, Suite 100 Raleigh, NC 27607
NC License No: F-0258

NOT TO SCALE

DRAWN BY: D.H. CARTER DATE: JUNE 2009
CHECKED BY: J.E. MONDOLFI DATE: JUNE 2009

PLOT: 5/24/2011 BMCMGR AM Florence & Hutcheson, Inc.
FILE NAME: p:\cross\dcarter\rdsrtp_34\sheet08\bridge\prestressed\bd42566_sht_cs3.dgn

BAR TYPES

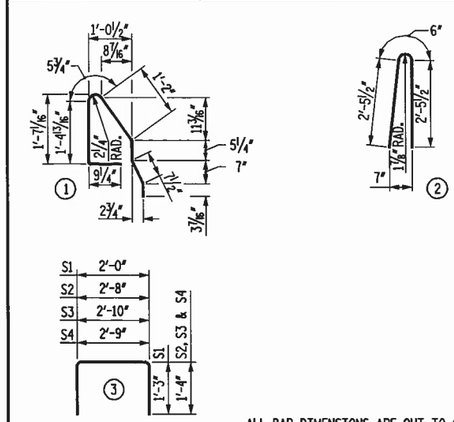

ALL BAR DIMENSIONS ARE OUT TO OUT.

BILL OF MATERIAL FOR ONE 30'-0" INTERIOR CORED SLAB SECTION

BAR	NO.	SIZE	TYPE	LENGTH	WEIGHT
B1	2	#4	STR	29'-8"	40
S1	16	#4	3	4'-6"	48
S2	54	#4	3	5'-4"	192
S3	4	#4	3	5'-6"	15
S4	4	#4	3	5'-5"	14
REINFORCING STEEL				LBS.	309
5000 P.S.I. CONCRETE				C.Y.	4.1
0.6"Ø L.R. STRANDS				NO.	8

BILL OF MATERIAL FOR ONE 40'-0" INTERIOR CORED SLAB SECTION

BAR	NO.	SIZE	TYPE	LENGTH	WEIGHT
B2	4	#4	STR	20'-9"	55
S1	16	#4	3	4'-6"	48
S2	74	#4	3	5'-4"	264
S3	4	#4	3	5'-6"	15
S4	4	#4	3	5'-5"	14
REINFORCING STEEL				LBS.	396
5000 P.S.I. CONCRETE				C.Y.	5.5
0.6"Ø L.R. STRANDS				NO.	11

BILL OF MATERIAL FOR CONCRETE BARRIER RAIL

BAR	NO.	SIZE	TYPE	LENGTH	WEIGHT
* B3	64	#5	STR	9'-6"	634
* B4	32	#5	STR	12'-0"	401
* S6	206	#5	2	5'-5"	1,164
*EPOXY COATED REINFORCING STEEL				LBS.	2,199
CLASS AA CONCRETE				C.Y.	21.9
TOTAL LIN. FT. OF CONCRETE BARRIER RAIL					200.0

BILL OF MATERIAL FOR ONE 30'-0" EXTERIOR CORED SLAB SECTION

BAR	NO.	SIZE	TYPE	LENGTH	WEIGHT
B1	2	#4	STR	29'-8"	40
S1	16	#4	3	4'-6"	48
S2	54	#4	3	5'-4"	192
S3	4	#4	3	5'-6"	15
S4	4	#4	3	5'-5"	14
* S5	31	#5	1	5'-2"	167
REINFORCING STEEL				LBS.	309
*EPOXY COATED REINFORCING STEEL				LBS.	167
5000 P.S.I. CONCRETE				C.Y.	4.1
0.6"Ø L.R. STRANDS				NO.	8

BILL OF MATERIAL FOR ONE 40'-0" EXTERIOR CORED SLAB SECTION

BAR	NO.	SIZE	TYPE	LENGTH	WEIGHT
B2	4	#4	STR	20'-9"	55
S1	16	#4	3	4'-6"	48
S2	74	#4	3	5'-4"	264
S3	4	#4	3	5'-6"	15
S4	4	#4	3	5'-5"	14
* S5	41	#5	1	5'-2"	221
REINFORCING STEEL				LBS.	396
*EPOXY COATED REINFORCING STEEL				LBS.	221
5000 P.S.I. CONCRETE				C.Y.	5.5
0.6"Ø L.R. STRANDS				NO.	11

GRADE 270 STRANDS

	0.6"Ø L.R.
AREA (SQUARE INCHES)	0.217
ULTIMATE STRENGTH (LBS. PER STRAND)	58,600
APPLIED PRESTRESS (LBS. PER STRAND)	43,950

NOTES

ALL PRESTRESSING STRANDS SHALL BE 7-WIRE LOW RELAXATION GRADE 270 STRANDS AND SHALL CONFORM TO AASHTO M203 EXCEPT FOR SAMPLING REQUIREMENTS WHICH SHALL BE IN ACCORDANCE WITH THE STANDARD SPECIFICATIONS.

ALL REINFORCING STEEL CAST WITH THE CORED SLAB SECTIONS SHALL BE GRADE 60 AND SHALL BE INCLUDED IN THE UNIT PRICE BID FOR PRESTRESSED CONCRETE CORED SLABS.

RECESSES FOR TRANSVERSE STRANDS SHALL BE GROUTED AFTER THE TENSIONING OF THE STRANDS.

THE 2½"Ø DOWEL HOLES AT FIXED ENDS OF SLAB SECTIONS SHALL BE FILLED WITH NON-SHRINK GROUT.

THE BACKER ROD SHALL CONFORM TO THE REQUIREMENTS OF TYPE M BOND BREAKER. SEE SECTION 1028 OF THE STANDARD SPECIFICATIONS.

WHEN CORED SLABS ARE CAST, A POSITIVE HOLD-DOWN SYSTEM SHALL BE EMPLOYED TO PREVENT VOIDS FROM RISING OR MOVING SIDEWAYS. THIS SYSTEM SHALL BE DESIGNED TO BE LEFT IN PLACE UNTIL THE CONCRETE HAS REACHED RELEASE STRENGTH. AT LEAST THREE WEEKS PRIOR TO CASTING CORED SLABS, THE CONTRACTOR SHALL SUBMIT TO THE ENGINEER FOR REVIEW AND COMMENT, DETAILED DRAWINGS OF THE PROPOSED HOLD-DOWN SYSTEM. IN ADDITION TO STRUCTURAL DETAILS, LOCATION AND SPACING OF THE HOLD-DOWNS SHALL BE INDICATED.

THE TRANSFER OF LOAD FROM THE ANCHORAGES TO THE CORED SLAB UNIT SHALL BE DONE WHEN THE CONCRETE HAS REACHED A COMPRESSIVE STRENGTH OF NOT LESS THAN 4600 PSI FOR 55' SPANS.

ALL REINFORCING STEEL IN BARRIER RAILS SHALL BE EPOXY COATED.

PRESTRESSING STRANDS SHALL BE CUT FLUSH WITH THE CORED SLAB UNIT ENDS.

APPLY EPOXY PROTECTIVE COATING TO CORED SLAB UNIT ENDS.

VERTICAL GROOVED CONTRACTION JOINTS, ½" IN DEPTH, SHALL BE TOOLED IN ALL EXPOSED FACES OF THE BARRIER RAIL AND IN ACCORDANCE WITH ARTICLE 825-10(B) OF THE STANDARD SPECIFICATIONS. A VERTICAL CONTRACTION JOINT SHALL BE LOCATED AT EACH THIRD POINT BETWEEN BARRIER RAIL EXPANSION JOINTS.

TRANSVERSE POST-TENSIONING OF THE CORED SLAB UNITS SHALL BE DONE IN ACCORDANCE WITH THE STANDARD SPECIFICATIONS, EXCEPT THAT THE STRANDS SHALL BE 0.60Ø AND TENSIONED TO 43,950 POUNDS.

THE MINIMUM AND MAXIMUM HEIGHTS OF THE BARRIER RAIL ARE SHOWN. THE HEIGHT OF THE BARRIER RAIL VARIES WHILE THE TOP OF THE RAIL FOLLOWS THE PROFILE OF THE GUTTERLINE.

DEAD LOAD DEFLECTION AND CAMBER

	SPANS "A" & "C"	SPAN "B"
	3'-0" x 1'-9"	3'-0" x 1'-9"
	0.6"Ø L.R. STRAND	0.6"Ø L.R. STRAND
CAMBER (SLAB ALONE IN PLACE)	0.245" ↑	0.724" ↑
DEFLECTION DUE TO SUPERIMPOSED DEAD LOAD **	0.033" ↓	0.103" ↓
FINAL CAMBER	0.212" ↑	0.621" ↑

** INCLUDES FUTURE WEARING SURFACE

CORED SLABS REQUIRED

	NUMBER			LENGTH			TOTAL LENGTH
	SPAN A	SPAN B	SPAN C	SPAN A	SPAN B	SPAN C	
EXTERIOR C.S.	2	2	2	30'-0"	40'-0"	30'-0"	200'-0"
INTERIOR C.S.	8	8	8	30-0"	40'-0"	30'-0"	800'-0"

SUMMARY FOR EXTERIOR CORED SLAB SECTIONS

		SPAN "A"	SPAN "B"	SPAN "C"	TOTAL
REINFORCING STEEL	LBS.	618	792	618	2028
*EPOXY COATED REINFORCING STEEL	LBS.	334	442	334	1,110
5000 P.S.I. CONCRETE	C.Y.	8.2	10.8	8.2	27.2
0.6"Ø L.R. STRANDS	NO.	16	22	16	54

SUMMARY FOR INTERIOR CORED SLAB SECTIONS

		SPAN "A"	SPAN "B"	SPAN "C"	TOTAL
REINFORCING STEEL	LBS.	2472	3168	2472	8112
*EPOXY COATED REINFORCING STEEL	LBS.	0	0	0	0
5000 P.S.I. CONCRETE	C.Y.	32.8	44.0	32.8	109.6
0.6"Ø L.R. STRANDS	NO.	64	88	64	216

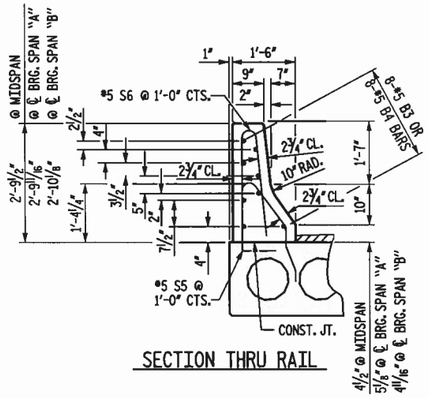

SECTION THRU RAIL

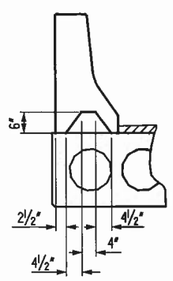

SECTION S-S

AT DAM IN OPEN JOINT (THIS IS TO BE USED ONLY WHEN SLIP FORM IS USED)

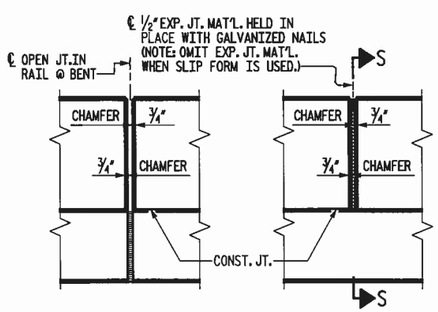

ELEVATION AT EXPANSION JOINTS

BARRIER RAIL DETAILS

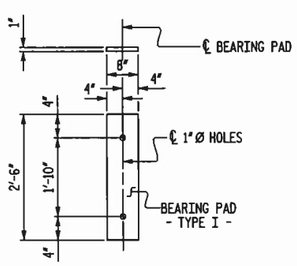

FIXED END

(TYPE I - 60 REQ'D.)

ELASTOMERIC BEARING DETAILS

NOT TO SCALE

DRAWN BY: D.H. CARTER DATE: JUNE 2009
CHECKED BY: J.E. MONDOLFI DATE: JUNE 2009

Florence & Hutcheson
CONSULTING ENGINEERS
5121 Kingdom Way, Suite 100 Raleigh, NC 27607
NC License No: F-0288

NORTH CAROLINA PROFESSIONAL SEAL 20532 ENGINEER JAMES E. MONDOLFI
7-18-11

PROJECT NO. 42566
COUNTY: STANLY
STATION: 16+08.00
REPLACES BRIDGE NO. 34

STATE OF NORTH CAROLINA
DEPARTMENT OF TRANSPORTATION
RALEIGH

BILL OF MATERIALS

REVISIONS						SHEET NO.
NO.	BY	DATE	NO.	BY	DATE	5
1			3			TOTAL SHEETS
2			4			27

PLOT: 5/24/2011 11:06:21 AM Florence & Hutcheson, Inc.
FILE NAME: p:\cad\drf\proj_34\ed8816\structure\b4515_ed_cr4.dgn

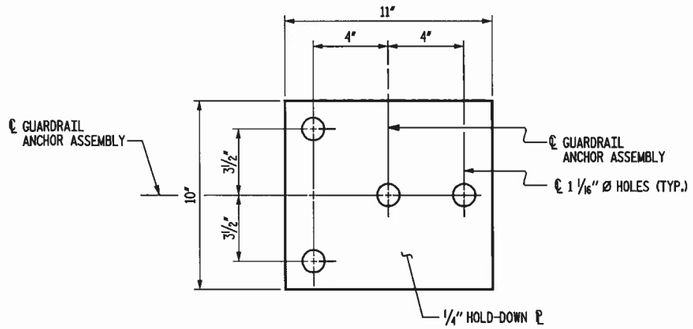

PLAN

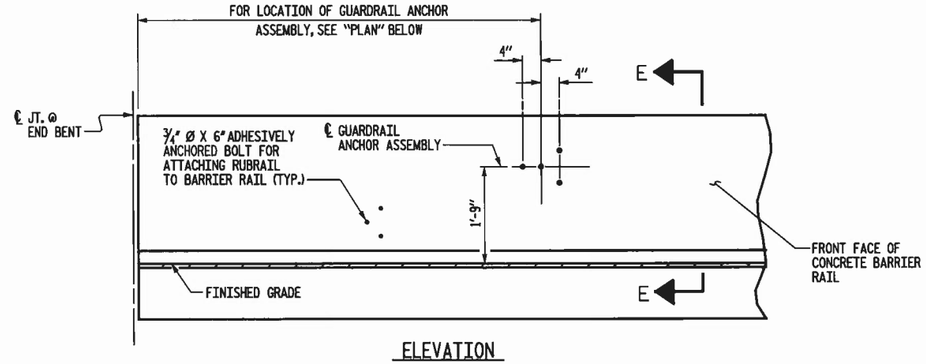

ELEVATION

FOR LOCATION OF RUBRAIL, SEE ROADWAY STD. 862.03

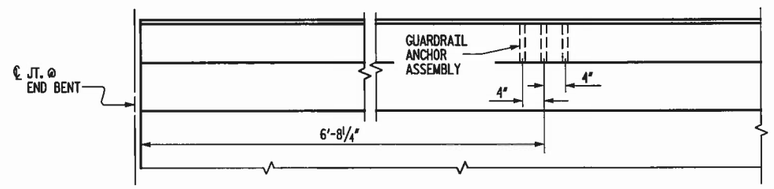

PLAN

LOCATION OF ANCHORS FOR GUARDRAIL

FOR CONCRETE BARRIER RAIL ONLY
END BENT #1 SHOWN, END BENT #2 SIMILAR

NOTES

THE GUARDRAIL ANCHOR ASSEMBLY SHALL CONSIST OF A 1/4" HOLD DOWN PLATE AND 7/8" Ø BOLTS WITH NUTS AND WASHERS, RUBRAIL, AND ADHESIVELY ANCHORED BOLTS.

THE HOLD-DOWN PLATE SHALL CONFORM TO AASHTO M270 GRADE 36. AFTER FABRICATION, THE HOLD-DOWN PLATE SHALL BE HOT-DIP GALVANIZED IN ACCORDANCE WITH AASHTO M111.

BOLTS SHALL CONFORM TO THE REQUIREMENTS OF ASTM A307 AND NUTS SHALL CONFORM TO THE REQUIREMENTS OF AASHTO M291. BOLTS, NUTS AND WASHERS SHALL BE GALVANIZED. (AT THE CONTRACTOR'S OPTION, STAINLESS STEEL BOLTS, NUTS AND WASHERS MAY BE USED AS AN ALTERNATE FOR THE 7/8" Ø GALVANIZED BOLTS, NUTS AND WASHERS. THEY SHALL CONFORM TO OR EXCEED THE MECHANICAL REQUIREMENTS OF ASTM A307. THE USE OF THIS ALTERNATE SHALL BE APPROVED BY THE ENGINEER.)

THE GUARDRAIL ANCHOR ASSEMBLY IS REQUIRED AT ALL POINTS WHERE APPROACH GUARDRAIL IS TO BE ATTACHED TO THE END OF CONCRETE BARRIER RAIL OR CONCRETE END POSTS. FOR POINTS OF ATTACHMENT, SEE SKETCH.

AFTER INSTALLATION, THE EXPOSED THREAD OF THE BOLT SHALL BE BURRED WITH A SHARP POINTED TOOL.

THE COST OF THE GUARDRAIL ANCHOR ASSEMBLY SHALL BE INCLUDED IN THE UNIT CONTRACT PRICE BID FOR CONCRETE BARRIER RAIL.

THE 1 1/4" Ø HOLES SHALL BE FORMED OR DRILLED WITH A CORE BIT. IMPACT TOOLS WILL NOT BE PERMITTED. ANY CONCRETE DAMAGED BY THIS WORK SHALL BE REPAIRED TO THE SATISFACTION OF THE ENGINEER.

THE C6 X 8.2 RUBRAIL IS TO BE ADHESIVELY ANCHORED TO THE RAIL USING THREE 3/4" Ø X 6" BOLTS WITH WASHERS. LEVEL ONE FIELD TESTING IS REQUIRED, AND THE YIELD LOAD OF THE 3/4" Ø BOLT IS 12 KIPS. FOR ADHESIVELY ANCHORED ANCHOR BOLTS OR DOWELS, SEE SPECIAL PROVISIONS. SEE ROADWAY STANDARD 862.03 FOR DETAILS AND LOCATION OF THE RUBRAIL.

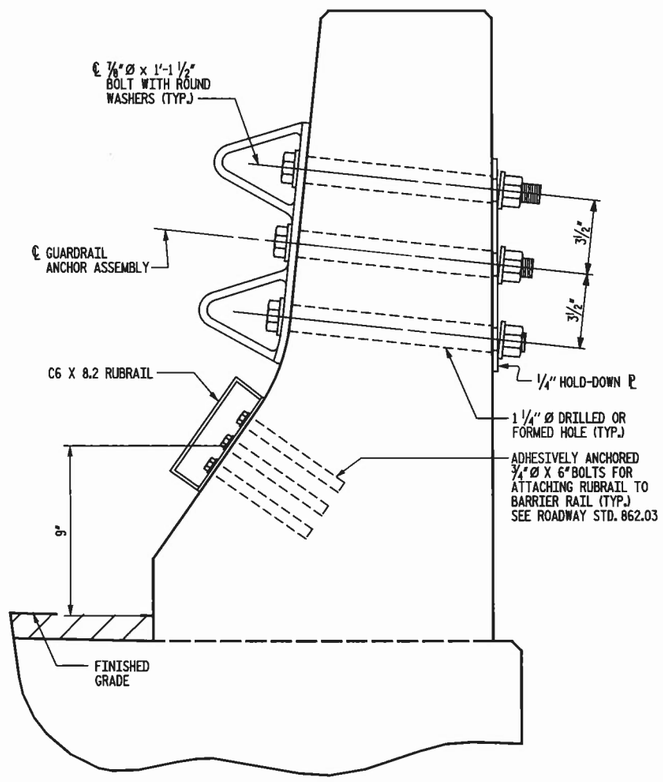

SECTION E-E

GUARDRAIL ANCHOR ASSEMBLY DETAILS

FOR CONCRETE BARRIER RAIL ONLY
(FOR LOCATION OF GUARDRAIL ANCHOR ASSEMBLY, SEE THIS SHEET)

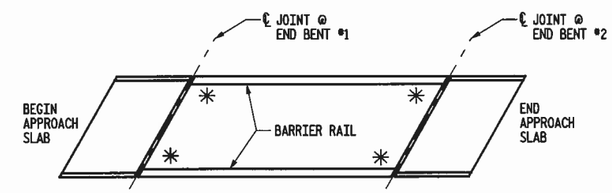

SKETCH SHOWING POINTS OF ATTACHMENTS

✳ DENOTES GUARDRAIL ANCHOR ASSEMBLY

PROJECT NO. 42566
COUNTY: STANLY
STATION: 16+08.00
REPLACES BRIDGE NO. 34

STATE OF NORTH CAROLINA
DEPARTMENT OF TRANSPORTATION
RALEIGH

SUPERSTRUCTURE
GUARDRAIL ANCHORAGE DETAILS

NOT TO SCALE

Florence & Hutcheson
CONSULTING ENGINEERS
5121 Kingdom Way, Suite 100 Raleigh, NC 27607
NC License No: F-0258

NORTH CAROLINA PROFESSIONAL SEAL 20532 JAMES E. MONDOLFI
7-18-11

REVISIONS						SHEET NO.
NO.	BY	DATE	NO.	BY	DATE	6
1			3			TOTAL SHEETS
2			4			27

DRAWN BY: D.H. CARTER DATE: JUNE 2009
CHECKED BY: J.E. MONDOLFI DATE: JUNE 2009

PLOT: 5/24/2011 LAUNCHED AM Florence & Hutcheson, Inc.
FILE NAME: p:\cons\drift\stanly_34\ms8216\structure\bd3115_sd_gr_dgn

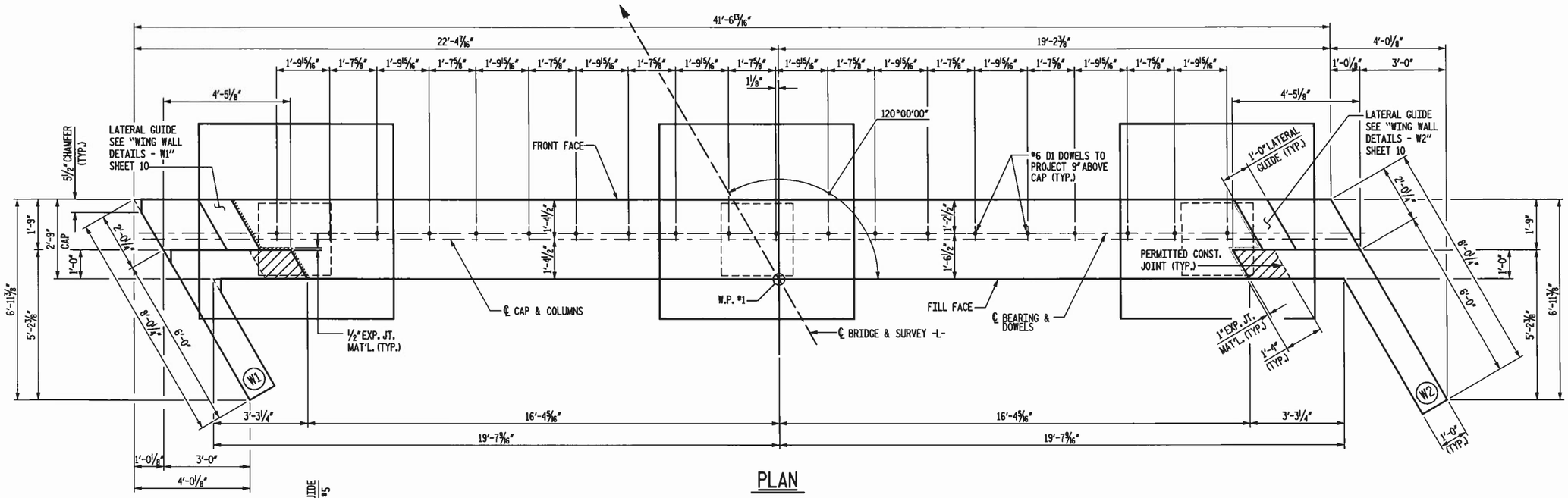

PLAN

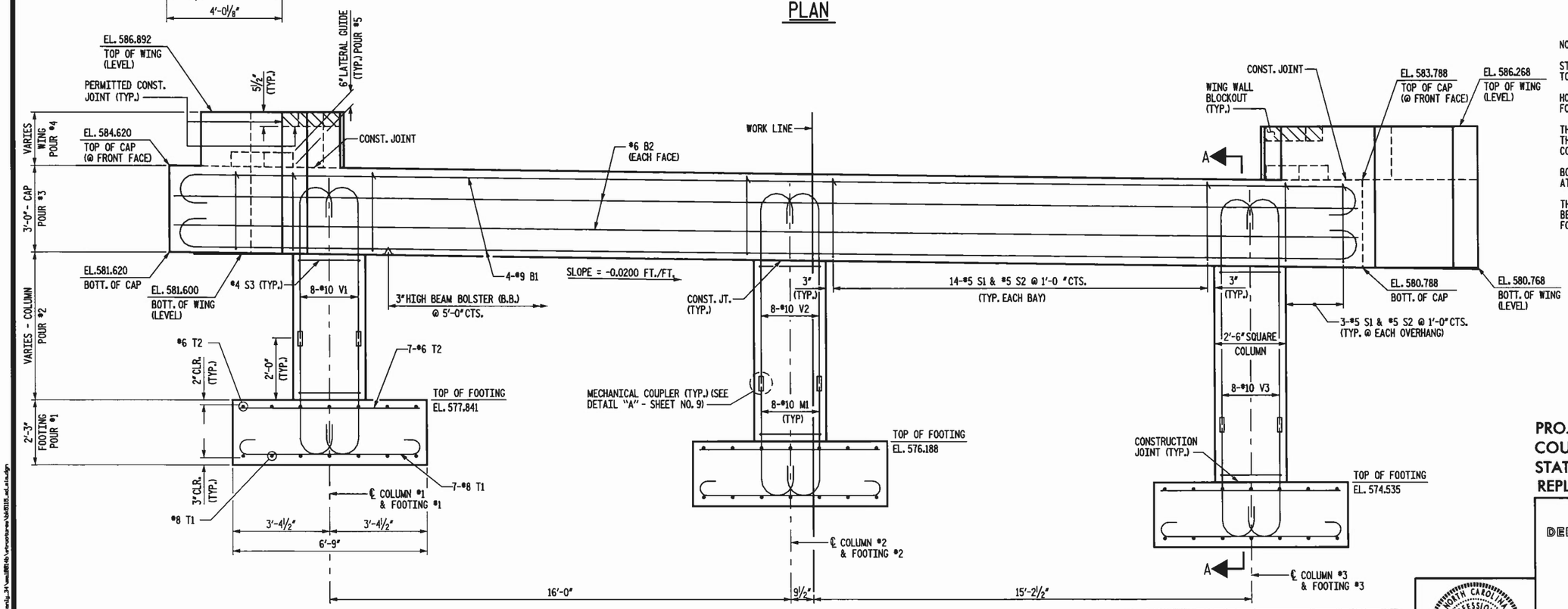

NOTE: FOR PLACEMENT OF COLUMN REINFORCEMENT AND FOOTING ELEVATIONS, SEE DETAIL "A" - SHEET NO. 9.

ELEVATION

DETAILS SHOWN FOR FOOTINGS ARE TYPICAL.

NOT TO SCALE

NOTES:

STIRRUPS MAY BE SHIFTED SLIGHTLY AS NECESSARY TO CLEAR DOWELS.

HOOKS ON "V" BARS MAY BE TURNED AS NECESSARY FOR PLACING REINFORCING STEEL.

THE CONTRACTOR'S ATTENTION IS CALLED TO THE FACT THAT THE LONGITUDINAL REINFORCEMENT FOR THE COLUMNS IS DETAILED WITH 3 FEET OF EXTRA LENGTH.

BOTTOM OF FOOTINGS SHALL NOT BE CONSTRUCTED AT AN ELEVATION HIGHER THAN SHOWN ON THE PLANS.

THE CONCRETE IN THE SHADED AREA OF THE WING SHALL BE POURED AFTER THE BARRIER RAIL IS CAST IF SLIP FORMING IS USED.

PROJECT NO. 42566
COUNTY: STANLY
STATION: 16+08.00
REPLACES BRIDGE NO. 34

STATE OF NORTH CAROLINA
DEPARTMENT OF TRANSPORTATION
RALEIGH

SUBSTRUCTURE
END BENT #1

Florence & Hutcheson
CONSULTING ENGINEERS
5121 Kingdom Way, Suite 100 Raleigh, NC 27607
NC License No: F-0258

NORTH CAROLINA PROFESSIONAL SEAL 20532 ENGINEER JAMES E. MONDOLFI
7-18-11

REVISIONS						SHEET NO.
NO.	BY	DATE	NO.	BY	DATE	7
1			3			TOTAL SHEETS
2			4			27

DRAWN BY: D.H. CARTER DATE: JUNE 2009
CHECKED BY: J.E. MONDOLFI DATE: JUNE 2009

FILE NAME: p:\rcwa\rdu\dfl\urban\ip_34\wsb8586\structure\b8586_sub_e1.dgn
PLOT: 5/24/2011 LAURADE AM Florence & Hutcheson, Inc.

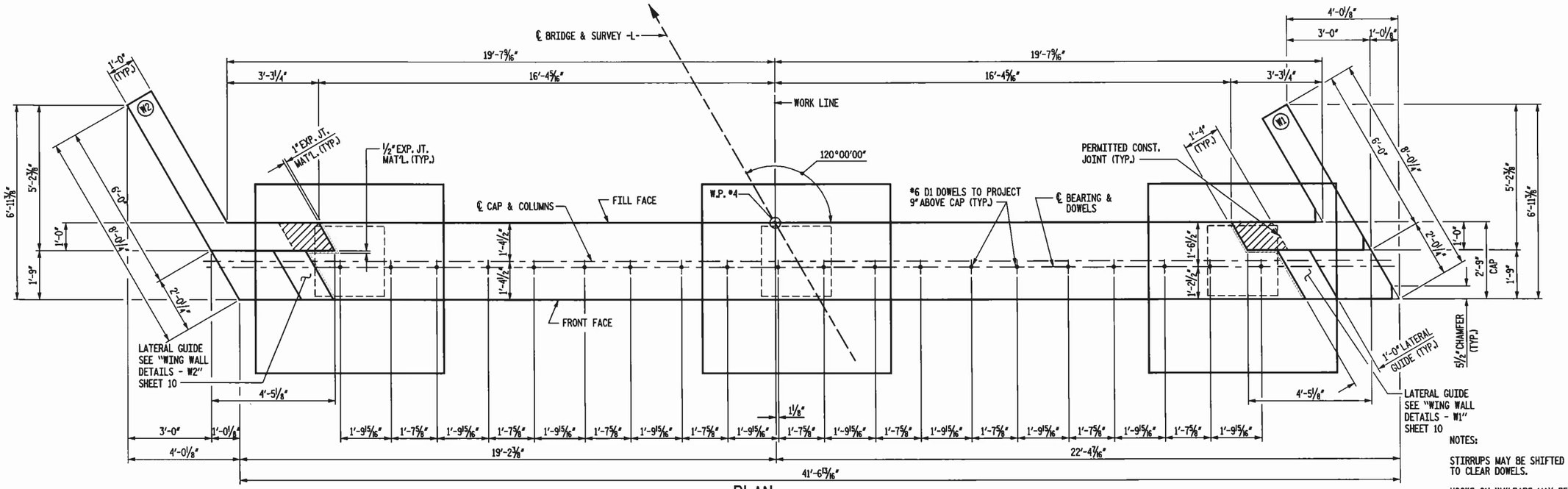

PLAN

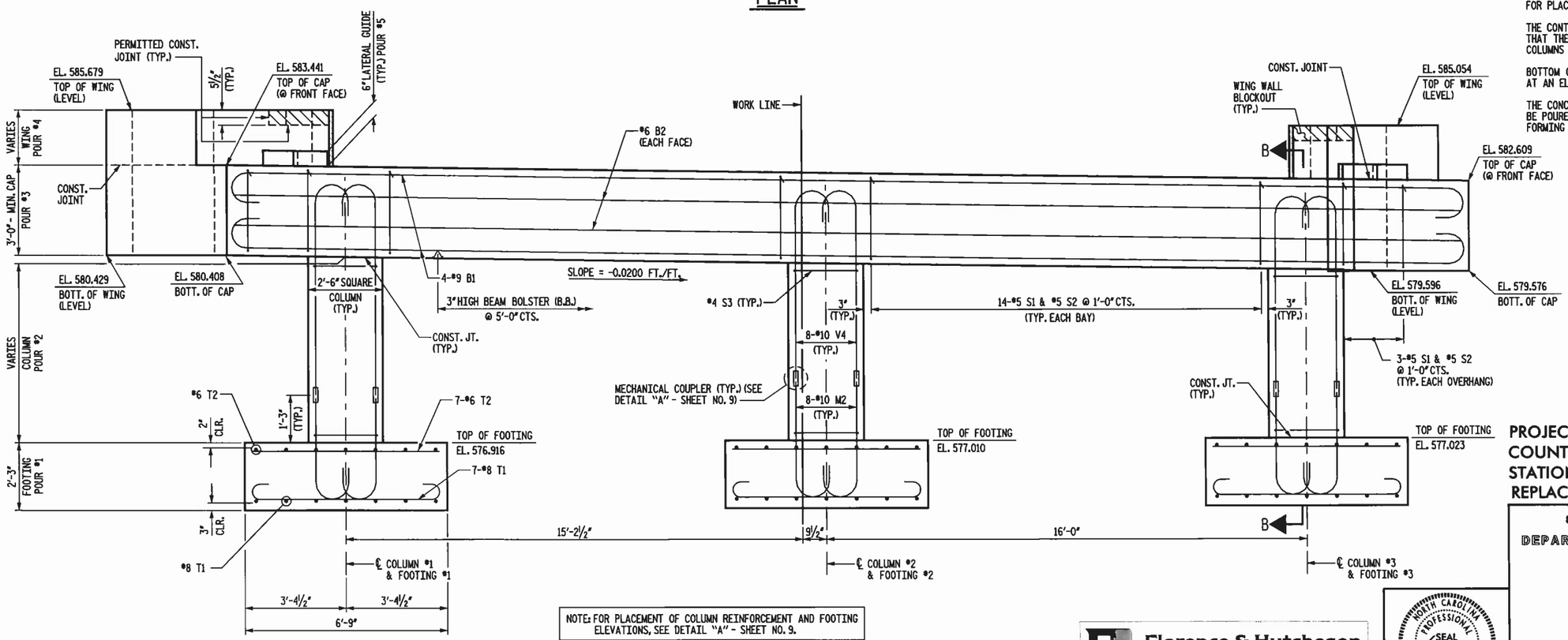

NOTE: FOR PLACEMENT OF COLUMN REINFORCEMENT AND FOOTING ELEVATIONS, SEE DETAIL "A" - SHEET NO. 9.

ELEVATION

DETAILS SHOWN FOR FOOTINGS ARE TYPICAL.

NOT TO SCALE

NOTES:

STIRRUPS MAY BE SHIFTED SLIGHTLY AS NECESSARY TO CLEAR DOWELS.

HOOKS ON "V" BARS MAY BE TURNED AS NECESSARY FOR PLACING REINFORCING STEEL.

THE CONTRACTOR'S ATTENTION IS CALLED TO THE FACT THAT THE LONGITUDINAL REINFORCEMENT FOR THE COLUMNS IS DETAILED WITH 3 FEET OF EXTRA LENGTH.

BOTTOM OF FOOTINGS SHALL NOT BE CONSTRUCTED AT AN ELEVATION HIGHER THAN SHOWN ON THE PLANS.

THE CONCRETE IN THE SHADED AREA OF THE WING SHALL BE POURED AFTER THE BARRIER RAIL IS CAST IF SLIP FORMING IS USED.

PROJECT NO. 42566
COUNTY: STANLY
STATION: 16+08.00
REPLACES BRIDGE NO. 34

STATE OF NORTH CAROLINA
DEPARTMENT OF TRANSPORTATION
RALEIGH

SUBSTRUCTURE
END BENT #2

Florence & Hutcheson
CONSULTING ENGINEERS
5121 Kingdom Way, Suite 100 Raleigh, NC 27607
NC License No: F-0258

NORTH CAROLINA PROFESSIONAL SEAL 20532 ENGINEER JAMES E. MONDOLFI
7-18-11

REVISIONS						SHEET NO.
NO.	BY	DATE	NO.	BY	DATE	8
1			3			TOTAL SHEETS
2			4			27

DRAWN BY: D.H. CARTER DATE: JUNE 2009
CHECKED BY: J.E. MONDOLFI DATE: JUNE 2009

PLOT: 9/21/2011 LUBRAT AM Florence & Hutcheson, Inc.
FILE NAME: p:\cons\divII\ymeilu_34\sub\BE45\structure\sub0115_ed_e2w.dgn

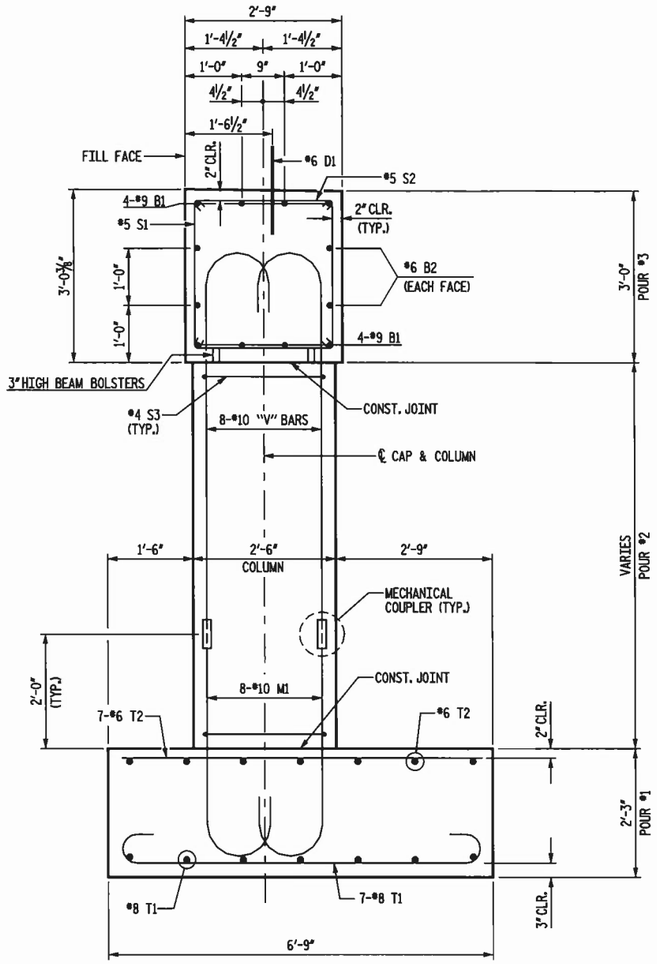

SECTION A-A
@ END BENT #1

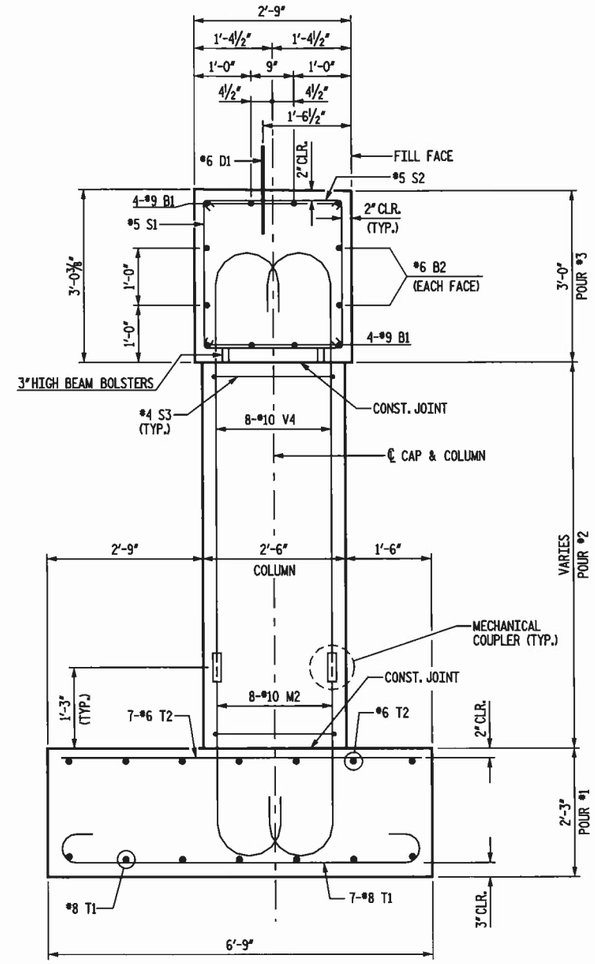

SECTION B-B
@ END BENT #2

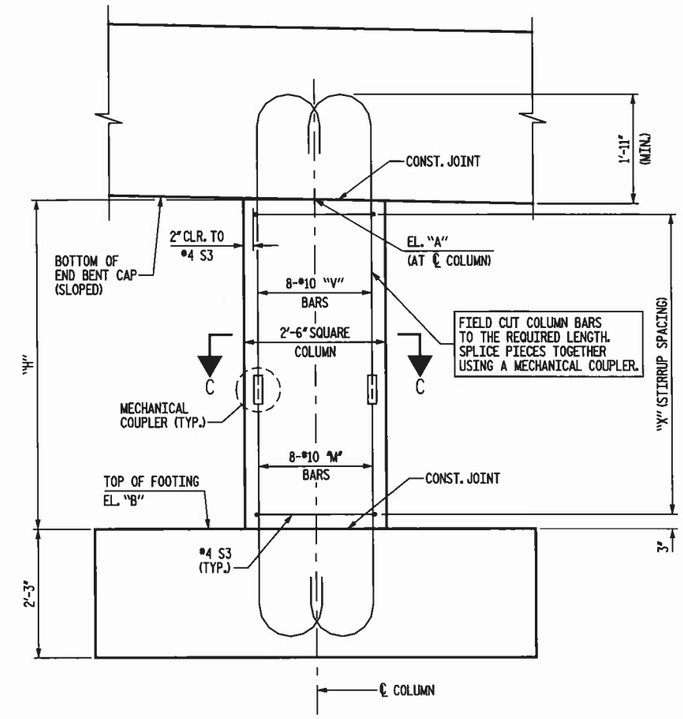

DETAIL "A"

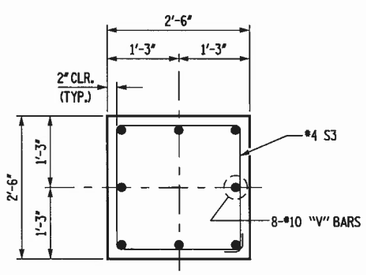

SECTION C-C

COLUMN TABLE

END BENT #1					END BENT #2				
	EL. "A"	EL. "B"	"H"	"X"		EL. "A"	EL. "B"	"H"	"X"
COLUMN #1	581.508	577.841	3'-8"	4-#4 S3 @ 1'-0" CTS.	COLUMN #1	580.333	576.916	3'-5"	4-#4 S3 @ 11" CTS.
COLUMN #2	581.188	576.188	5'-0"	6-#4 S3 @ 10" CTS.	COLUMN #2	580.010	577.010	3'-0"	4-#4 S3 @ 10" CTS.
COLUMN #3	580.868	574.535	6'-4"	7-#4 S3 @ 11" CTS.	COLUMN #3	579.690	577.023	2'-8"	4-#4 S3 @ 9" CTS.

PROJECT NO. 42566
COUNTY: STANLY
STATION: 16+08.00
REPLACES BRIDGE NO. 34

STATE OF NORTH CAROLINA
DEPARTMENT OF TRANSPORTATION
RALEIGH

SUBSTRUCTURE
END BENTS #1 & #2 DETAILS

NOT TO SCALE

Florence & Hutcheson
CONSULTING ENGINEERS
5121 Kingdom Way, Suite 100 Raleigh, NC 27607
NC License No: F-0258

NORTH CAROLINA PROFESSIONAL SEAL 20332 ENGINEER JAMES E. MONDOLFI
7-18-11

REVISIONS						SHEET NO.
NO.	BY	DATE	NO.	BY	DATE	9
1			3			TOTAL SHEETS
2			4			27

DRAWN BY: D.H. CARTER DATE: JUNE 2009
CHECKED BY: J.E. MONDOLFI DATE: JUNE 2009

PLOT: 8/24/2011 LAURA M Florence & Hutcheson, Inc.
FILE NAME: p:\cons\dot\f\wenlja34\ea\BRIDGE\structure\SA0115_sd_sub.dgn

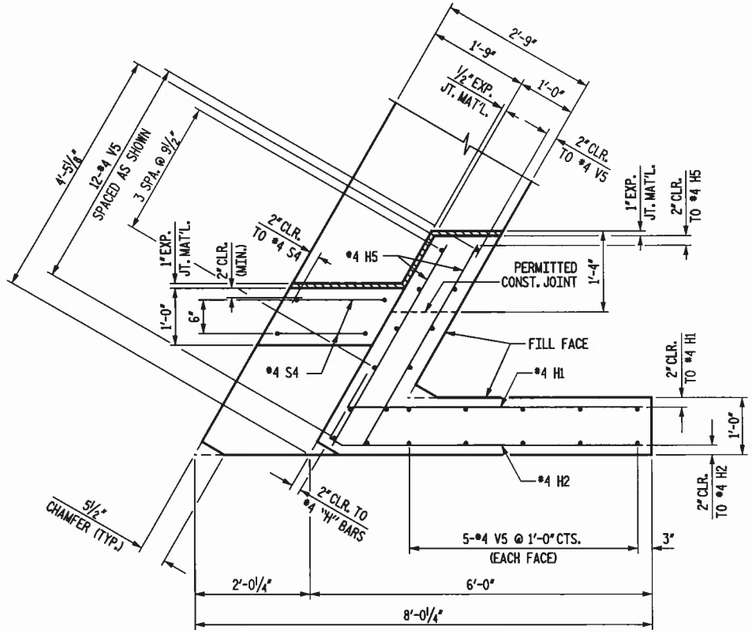

PLAN OF WING - W1

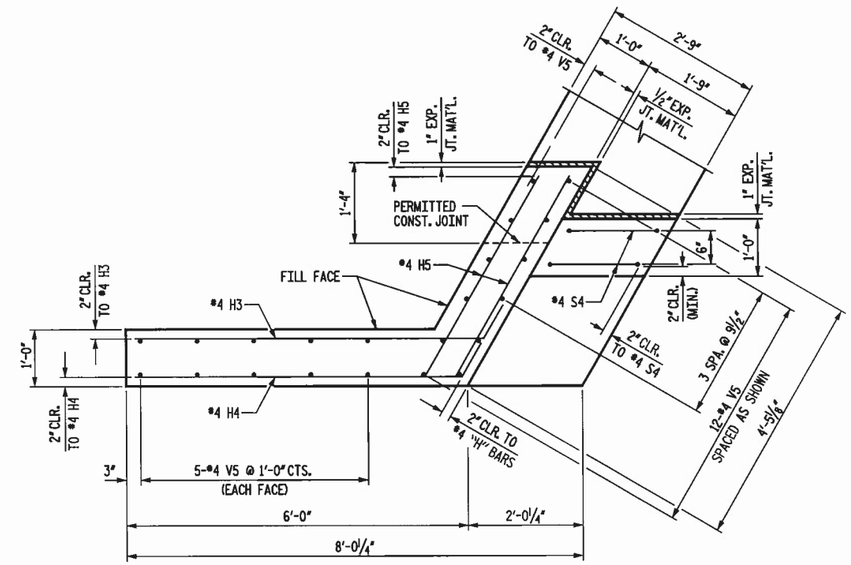

PLAN OF WING - W2

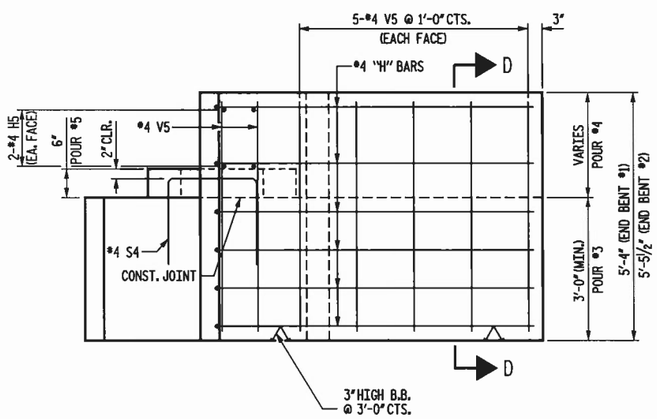

ELEVATION OF WING - W1

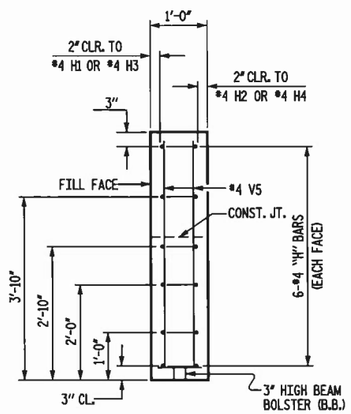

SECTION D-D

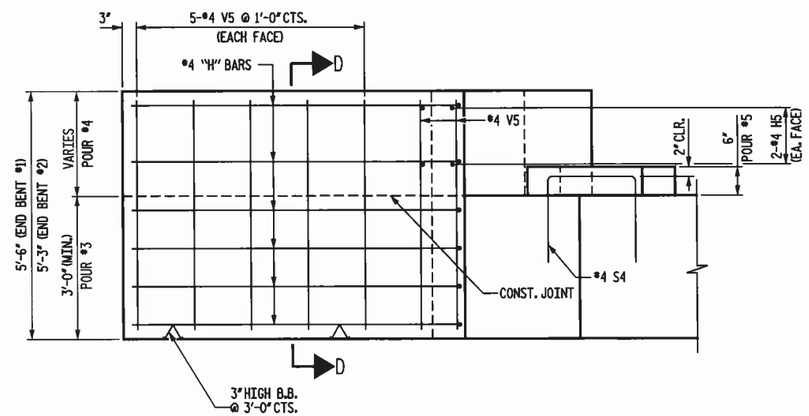

ELEVATION OF WING - W2

PROJECT NO. 42566
COUNTY: STANLY
STATION: 16+08.00
REPLACES BRIDGE NO. 34

STATE OF NORTH CAROLINA
DEPARTMENT OF TRANSPORTATION
RALEIGH

SUBSTRUCTURE
WING DETAILS

NOT TO SCALE

Florence & Hutcheson
CONSULTING ENGINEERS
5121 Kingdom Way, Suite 100 Raleigh, NC 27607
NC License No: F-0258

NORTH CAROLINA PROFESSIONAL SEAL 20532 J.E. MONDOLFI
7-18-11

REVISIONS						SHEET NO.
NO.	BY	DATE	NO.	BY	DATE	10
1			3			TOTAL SHEETS
2			4			27

DRAWN BY: D.H. CARTER DATE: JUNE 2009
CHECKED BY: J.E. MONDOLFI DATE: JUNE 2009

PLOT: 5/24/2011 11:08:18 AM Florence & Hutcheson, Inc.
FILE NAME: p:\cons\div7\stanly_34\wbd0245\structure\SUBSTR_wing.dgn

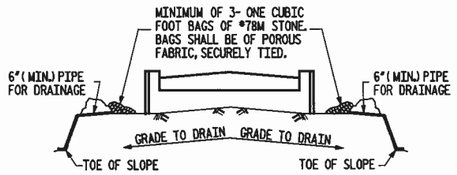

BAGGED STONE AND PIPE SHALL BE PLACED IMMEDIATELY AFTER COMPLETION OF END BENT EXCAVATION. PIPE MAY BE EITHER CONCRETE, CORRUGATED STEEL, CORRUGATED ALUMINUM ALLOY, OR CORRUGATED PLASTIC. PERFORATED PIPE WILL NOT BE ALLOWED.

BAGGED STONE SHALL REMAIN IN PLACE UNTIL THE ENGINEER DIRECTS THAT IT BE REMOVED. THE CONTRACTOR SHALL REMOVE AND DISPOSE OF SILT ACCUMULATIONS AT BAGGED STONE WHEN SO DIRECTED BY THE ENGINEER. BAGS SHALL BE REMOVED AND REPLACED WHENEVER THE ENGINEER DETERMINES THAT THEY HAVE DETERIORATED AND LOST THEIR EFFECTIVENESS.

NO SEPARATE PAYMENT WILL BE MADE FOR THIS WORK AND THE ENTIRE COST OF THIS WORK SHALL BE INCLUDED IN THE UNIT CONTRACT PRICE BID FOR THE SEVERAL PAY ITEMS.

TEMPORARY DRAINAGE AT END BENT

BAR TYPES

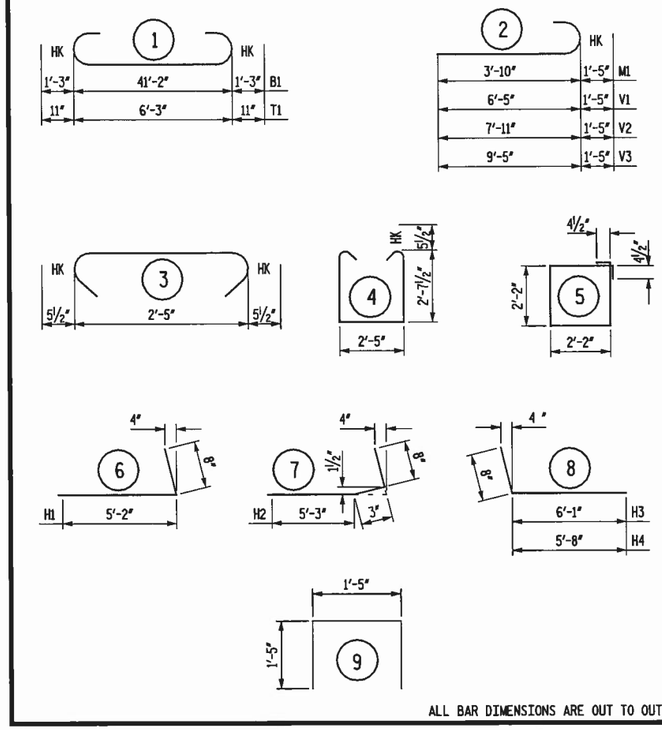

ALL BAR DIMENSIONS ARE OUT TO OUT

BILL OF MATERIAL

END BENT #1

BAR	NO.	SIZE	TYPE	LENGTH	WEIGHT
B1	8	#9	1	43'-8"	1188
B2	4	#6	STR	41'-2"	247
D1	20	#6	STR	1'-6"	45
H1	6	#4	6	5'-10"	23
H2	6	#4	7	6'-2"	25
H3	6	#4	8	6'-9"	27
H4	6	#4	8	6'-4"	25
H5	8	#4	STR	4'-0"	21
M1	24	#10	2	5'-3"	542
S1	34	#5	4	8'-7"	304
S2	34	#5	3	3'-4"	118
S3	17	#4	5	9'-5"	107
S4	4	#4	9	4'-3"	11
T1	42	#8	1	8'-1"	906
T2	42	#6	STR	6'-3"	394
V1	8	#10	2	7'-10"	270
V2	8	#10	2	9'-4"	321
V3	8	#10	2	10'-10"	373
V5	44	#4	STR	4'-11"	145
REINFORCING STEEL TOTAL				LBS.	5092

POUR #1 FOOTING	11.4	CY
POUR #2 COLUMN	3.5	CY
POUR #3 CAP & BOTTOM OF WING	13.8	CY
POUR #4 TOP OF WING	1.3	CY
POUR #5 LATERAL GUIDE	0.1	CY
TOTAL	30.1	CY

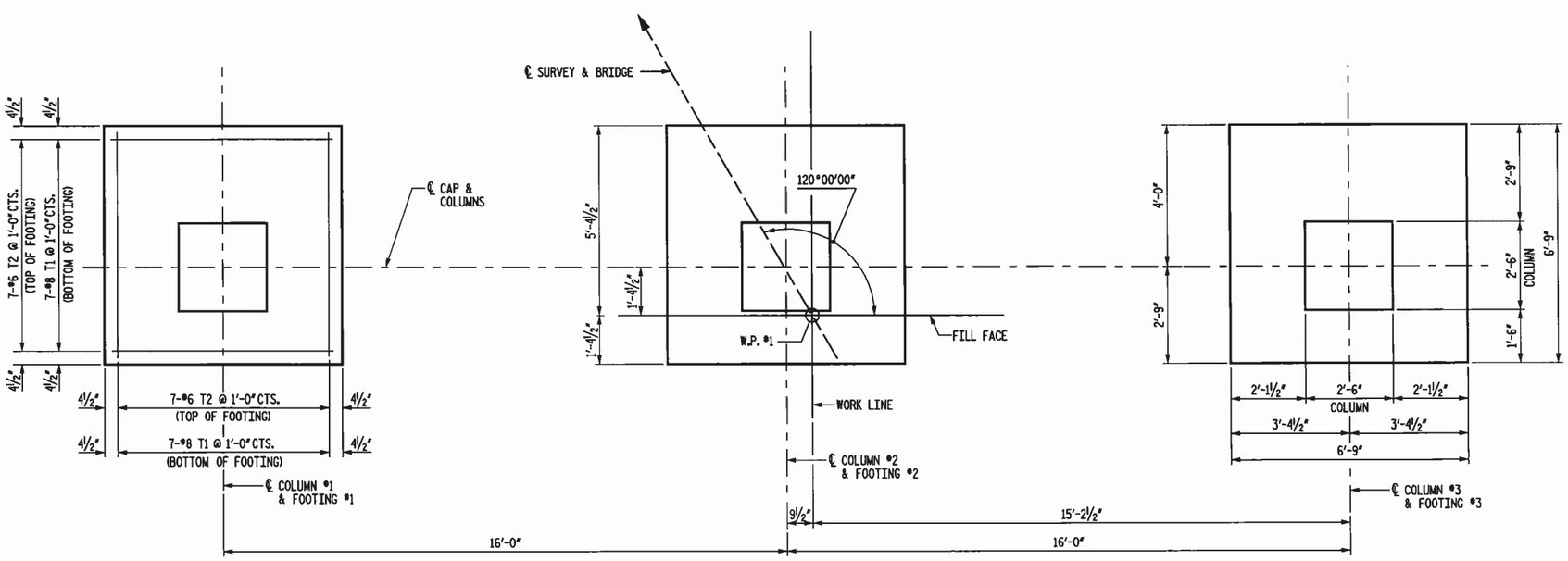

PLAN OF FOOTINGS

NOTE:

DETAILS SHOWN ARE TYPICAL FOR ALL FOOTINGS.

FOR COLUMN REINFORCING STEEL NOT SHOWN, SEE DETAIL "A" AND SECTION A-A ON SHEET NO. 9.

NOT TO SCALE

PROJECT NO. 42566
COUNTY: STANLY
STATION: 16+08.00
REPLACES BRIDGE NO. 34

STATE OF NORTH CAROLINA
DEPARTMENT OF TRANSPORTATION
RALEIGH

SUBSTRUCTURE
END BENT #1 DETAILS

Florence & Hutcheson
CONSULTING ENGINEERS
5121 Kingdom Way, Suite 100 Raleigh, NC 27607
NC License No: F-0258

NORTH CAROLINA PROFESSIONAL SEAL 20532 JAMES E. MONDOLFI
7-18-11

REVISIONS						SHEET NO.
NO.	BY	DATE	NO.	BY	DATE	11
1			3			TOTAL SHEETS
2			4			27

DRAWN BY: D.H. CARTER DATE: JUNE 2009
CHECKED BY: J.E. MONDOLFI DATE: JUNE 2009

PLOT: 9/24/2011 11:08:12 AM Florence & Hutcheson, Inc.
FILE NAME: p:\roan\dot\structure-ip-34\sub\ebt6\structure\sub0115_end_ebt6.dgn

BAR TYPES

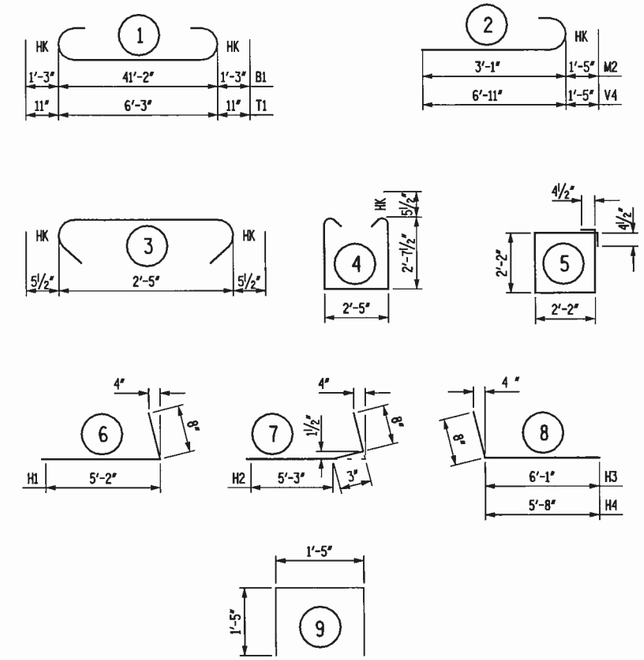

BILL OF MATERIAL

END BENT #2

BAR	NO.	SIZE	TYPE	LENGTH	WEIGHT
B1	8	#9	1	43'-8"	1188
B2	4	#6	STR	41'-2"	250
D1	20	#6	STR	1'-6"	45
H1	6	#4	6	5'-10"	23
H2	6	#4	7	6'-2"	25
H3	6	#4	8	6'-9"	27
H4	6	#4	8	6'-4"	25
H5	8	#4	STR	4'-0"	21
M2	24	#10	2	4'-6"	465
S1	34	#5	4	8'-7"	304
S2	34	#5	3	3'-4"	118
S3	12	#4	5	9'-5"	76
S4	4	#4	9	4'-3"	11
T1	42	#8	1	8'-1"	906
T2	42	#6	STR	6'-3"	394
V4	24	#10	2	8'-4"	861
V5	44	#4	STR	4'-10"	142
REINFORCING STEEL TOTAL				LBS.	4881

POUR #1 FOOTING	11.4	CY
POUR #2 COLUMN	2.1	CY
POUR #3 CAP & BOTTOM OF WING	13.8	CY
POUR #4 TOP OF WING	1.3	CY
POUR #5 LATERAL GUIDE	0.1	CY
TOTAL	28.7	CY

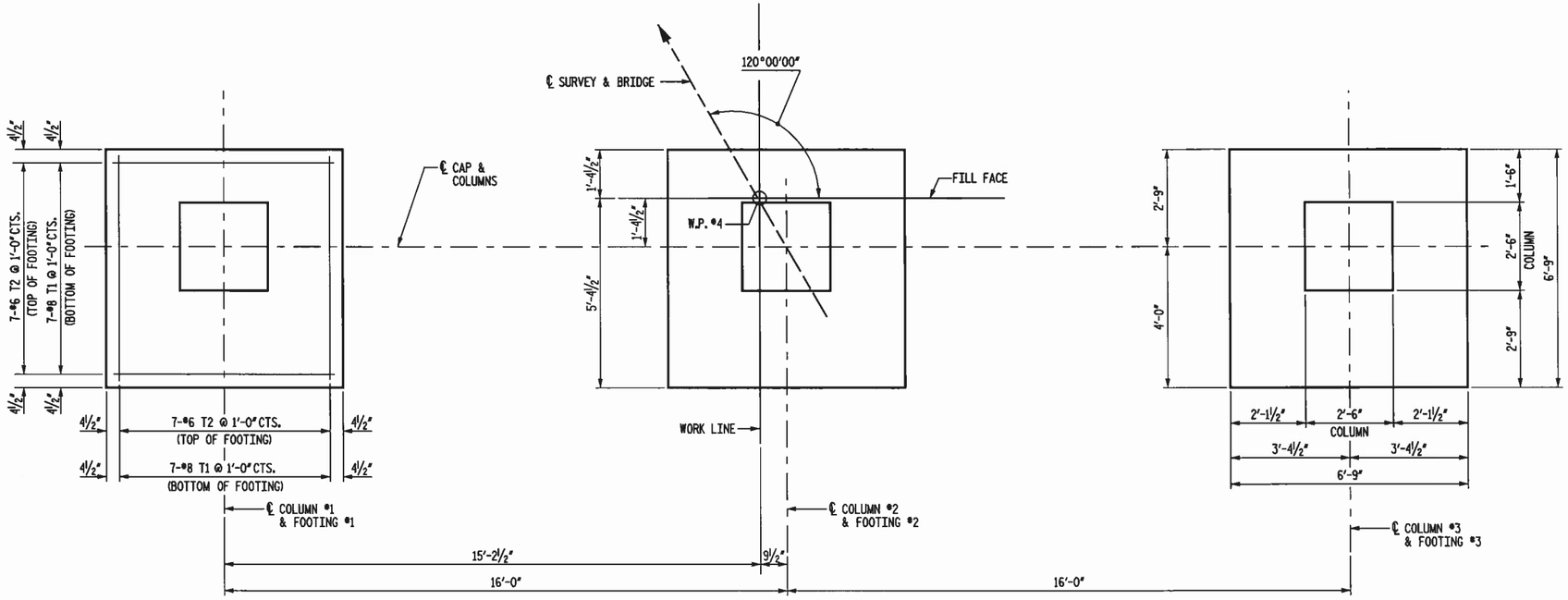

PLAN OF FOOTINGS

NOTE:

DETAILS SHOWN ARE TYPICAL FOR ALL FOOTINGS.

FOR COLUMN REINFORCING STEEL NOT SHOWN, SEE DETAIL "A" AND SECTION B-B ON SHEET NO. 9.

NOT TO SCALE

PROJECT NO. 42566
COUNTY: STANLY
STATION: 16+08.00
REPLACES BRIDGE NO. 34

STATE OF NORTH CAROLINA
DEPARTMENT OF TRANSPORTATION
RALEIGH

SUBSTRUCTURE
END BENT #2 DETAILS

Florence & Hutcheson
CONSULTING ENGINEERS
5121 Kingdom Way, Suite 100 Raleigh, NC 27607
NC License No: F-0258

NORTH CAROLINA PROFESSIONAL SEAL 20532 ENGINEER JAMES E. MONDOLFI
7-18-11

REVISIONS						SHEET NO.
NO.	BY	DATE	NO.	BY	DATE	12
1			3			TOTAL SHEETS
2			4			27

DRAWN BY: D.H. CARTER DATE: JUNE 2009
CHECKED BY: J.E. MONDOLFI DATE: JUNE 2009

PLOT: 5/24/2011 11:58:14 AM Florence & Hutcheson, Inc.
FILE NAME: p:\cons\ds\d17\stanly_34\mod\BR16\structures\b4b518_end_e2b.dgn

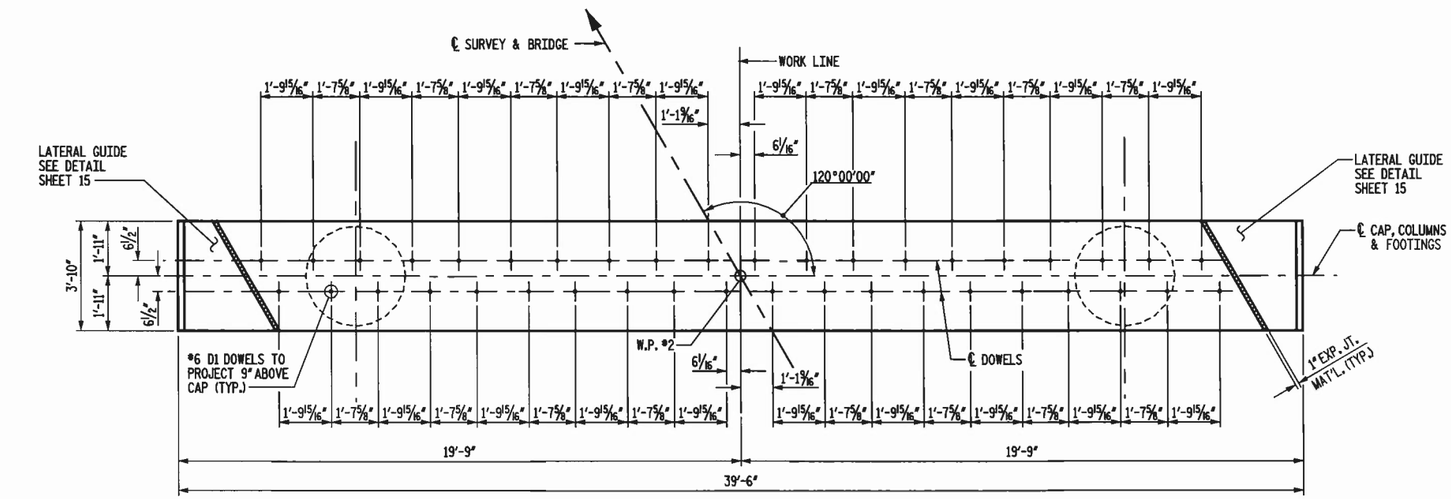

PLAN

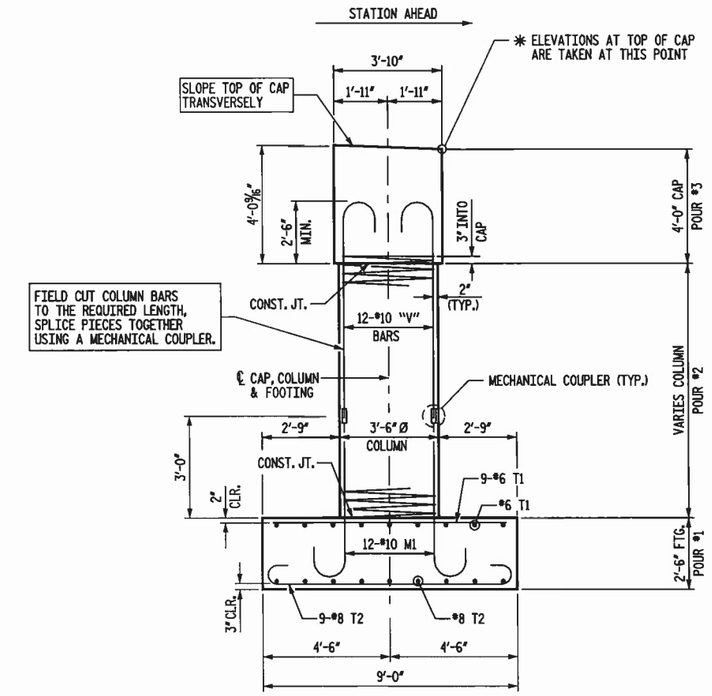

END ELEVATION

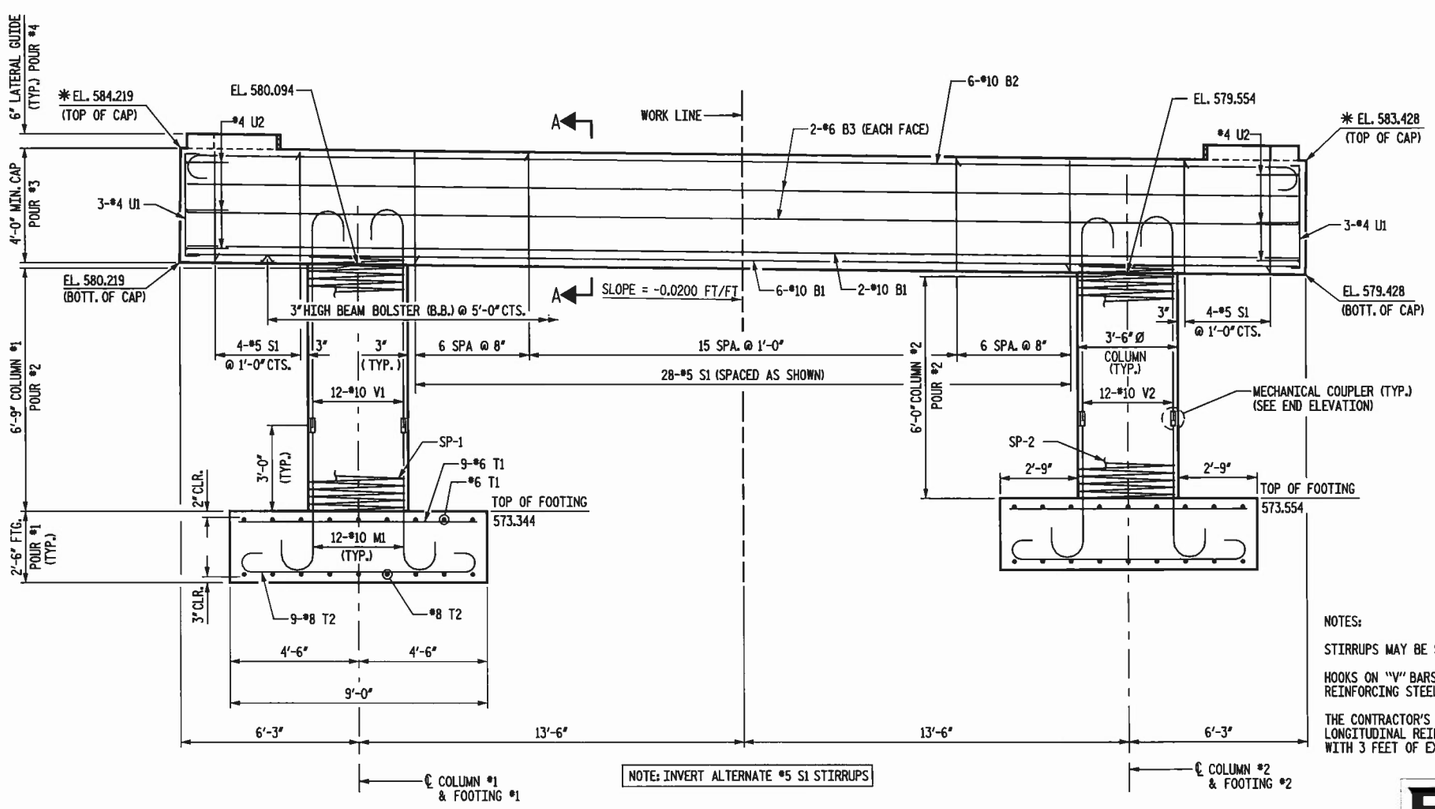

ELEVATION

DETAILS SHOWN FOR FOOTINGS ARE TYPICAL.

NOTES:

STIRRUPS MAY BE SHIFTED SLIGHTLY AS NECESSARY TO CLEAR DOWELS.

HOOKS ON "V" BARS MAY BE TURNED AS NECESSARY FOR PLACING REINFORCING STEEL.

THE CONTRACTOR'S ATTENTION IS CALLED TO THE FACT THAT THE LONGITUDINAL REINFORCEMENT FOR THE COLUMNS IS DETAILED WITH 3 FEET OF EXTRA LENGTH.

NOT TO SCALE

PROJECT NO. 42566
COUNTY: STANLY
STATION: 16+08.00
REPLACES BRIDGE NO. 34

STATE OF NORTH CAROLINA
DEPARTMENT OF TRANSPORTATION
RALEIGH

SUBSTRUCTURE
BENT #1

Florence & Hutcheson
CONSULTING ENGINEERS
5121 Kingdom Way, Suite 100 Raleigh, NC 27607
NC License No: F-0258

NORTH CAROLINA PROFESSIONAL SEAL 20532 J.E. MONDOLFI
7-18-11

REVISIONS						SHEET NO.
NO.	BY	DATE	NO.	BY	DATE	13
1			3			TOTAL SHEETS
2			4			27

DRAWN BY: D.H. CARTER DATE: JUNE 2009
CHECKED BY: J.E. MONDOLFI DATE: JUNE 2009

PLOT: 5/24/2011 LABELS 44 Florence & Hutcheson, Inc.
FILE NAME: p:\cadd\dn\BTV\rdwy\p_34\bd8184\structure\bd8184_sub1.bha.dgn

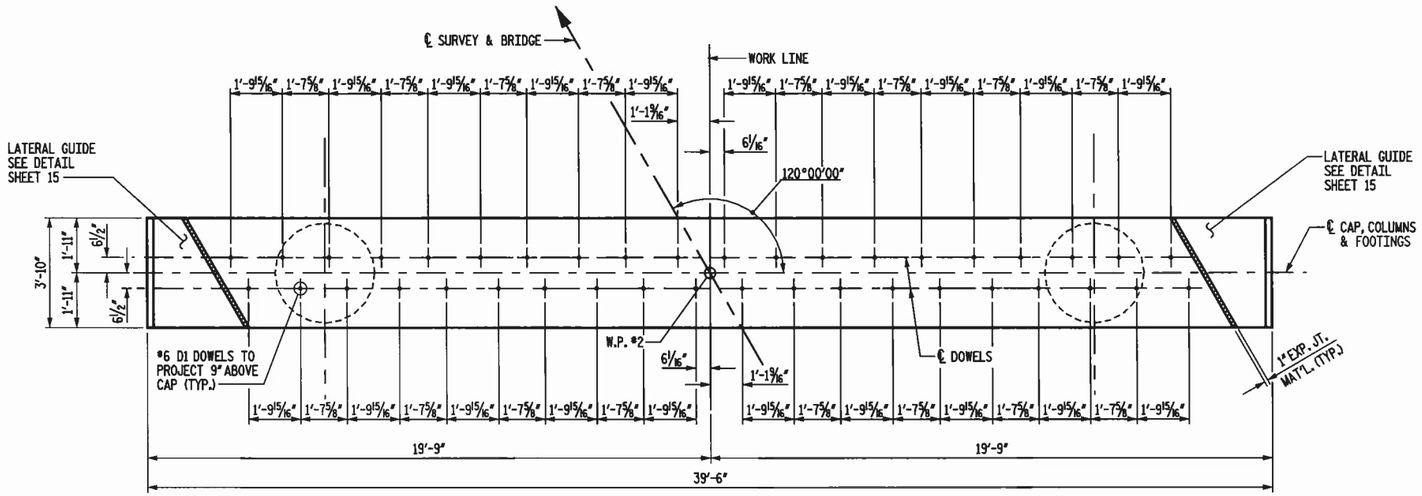

PLAN

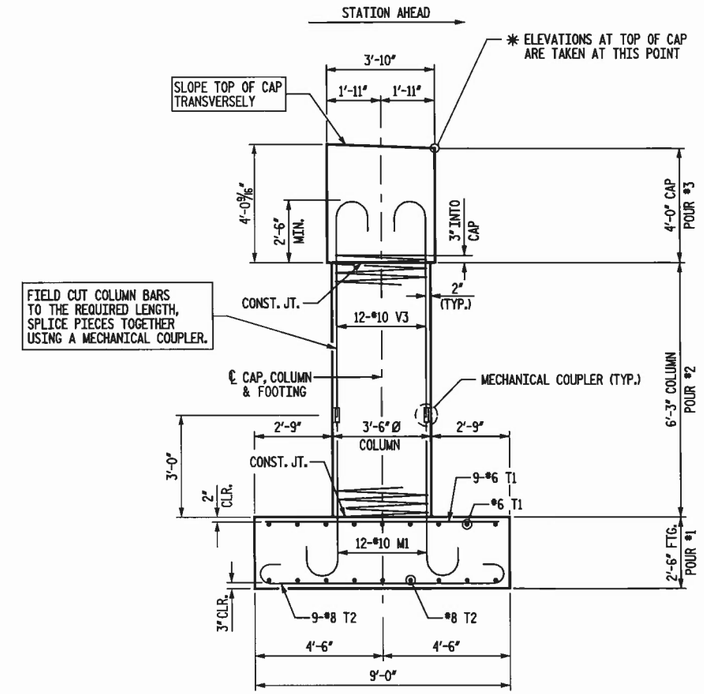

END ELEVATION

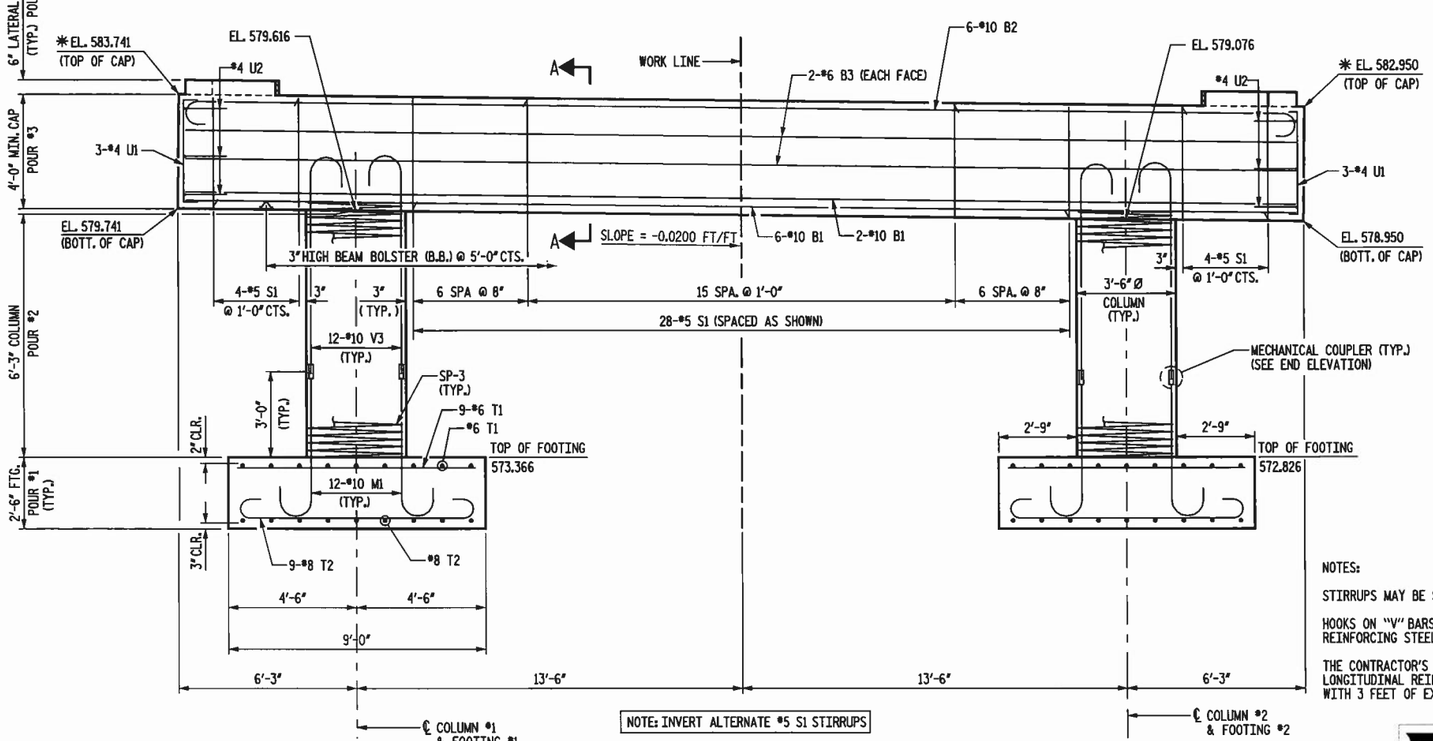

NOTE: INVERT ALTERNATE #5 S1 STIRRUPS

ELEVATION

DETAILS SHOWN FOR FOOTINGS ARE TYPICAL.

NOTES:

STIRRUPS MAY BE SHIFTED SLIGHTLY AS NECESSARY TO CLEAR DOWELS.

HOOKS ON "V" BARS MAY BE TURNED AS NECESSARY FOR PLACING REINFORCING STEEL.

THE CONTRACTOR'S ATTENTION IS CALLED TO THE FACT THAT THE LONGITUDINAL REINFORCEMENT FOR THE COLUMNS IS DETAILED WITH 3 FEET OF EXTRA LENGTH.

NOT TO SCALE

PROJECT NO. 42566
COUNTY: STANLY
STATION: 16+08.00
REPLACES BRIDGE NO. 34

STATE OF NORTH CAROLINA
DEPARTMENT OF TRANSPORTATION
RALEIGH

SUBSTRUCTURE
BENT #2

Florence & Hutcheson
CONSULTING ENGINEERS
5121 Kingdom Way, Suite 100 Raleigh, NC 27607
NC License No: F-0288

NORTH CAROLINA PROFESSIONAL SEAL 20532 ENGINEER JAMES E. MONDOLFI
7-18-11

REVISIONS						SHEET NO.
NO.	BY	DATE	NO.	BY	DATE	14
1			3			TOTAL SHEETS
2			4			27

DRAWN BY: D.H. CARTER DATE: JUNE 2009
CHECKED BY: J.E. MONDOLFI DATE: JUNE 2009

FILE NAME: p:\rcsw\dot\ftrwrdg_34\mdl8\16\structure\b40115_sub2bent.dgn
PLOT: 5/24/2011 1:40:18 AM Florence & Hutcheson, Inc.

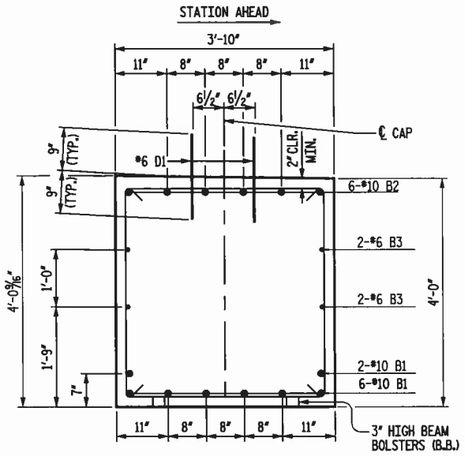

SECTION A-A

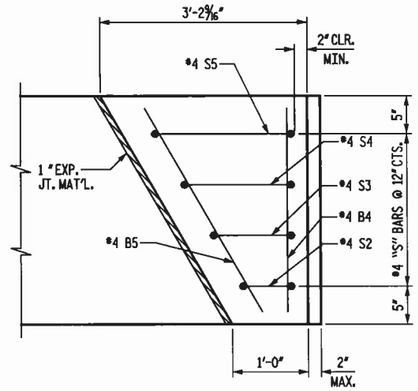

PLAN

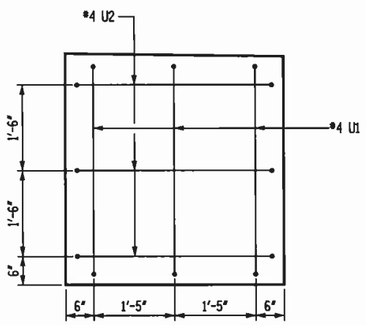

CAP END VIEW

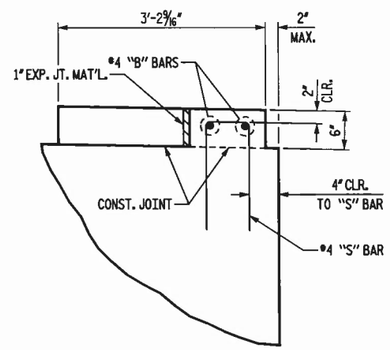

ELEVATION

DETAIL "A"

BAR TYPES

ALL BAR DIMENSIONS ARE OUT TO OUT.

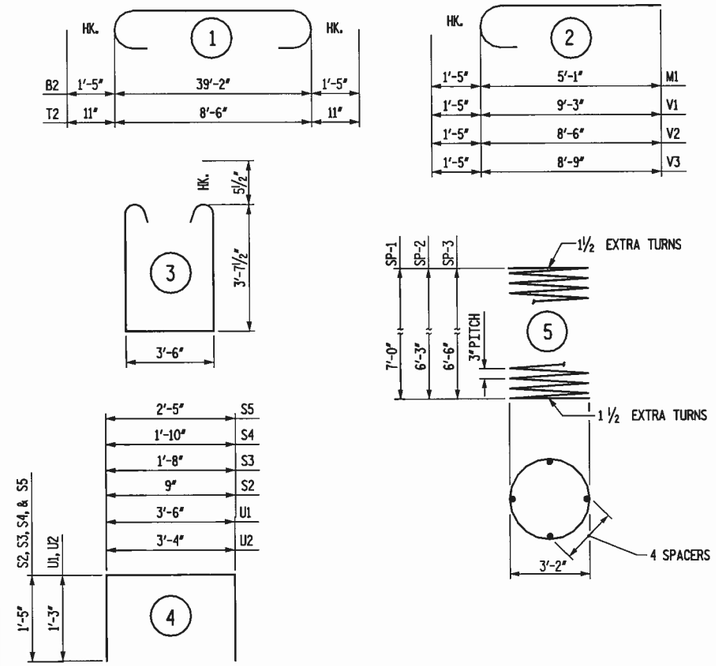

BILL OF MATERIAL

BENT #1

BAR	NO.	SIZE	TYPE	LENGTH	WEIGHT
B1	8	10	STR	39'-2"	1,348
B2	6	10	1	42'-0"	1,084
B3	4	6	STR	39'-2"	235
B4	2	4	STR	3'-6"	5
B5	2	4	STR	4'-0"	5
D1	40	6	STR	1'-6"	90
M1	24	10	2	6'-6"	671
S1	36	5	3	11'-8"	438
S2	2	4	4	3'-7"	5
S3	2	4	4	4'-1"	6
S4	2	4	4	4'-8"	6
S5	2	4	4	5'-3"	7
T1	36	6	STR	8'-6"	460
T2	36	8	1	10'-4"	993
U1	6	4	4	6'-0"	24
U2	6	4	4	5'-10"	23
V1	12	10	2	10'-8"	551
V2	12	10	2	9'-11"	512

REINFORCING STEEL TOTAL 6,463 LB

SPIRAL COLUMN REINFORCING STEEL

BAR	NO.	SIZE	TYPE	LENGTH	WEIGHT
SP-1	1	**	5	304'-6"	203
SP-2	1	**	5	275'-0"	184

SPIRAL COLUMN REINF. STEEL TOTAL 387 LB

POUR #1 FOOTING 15 CY
POUR #2 COLUMN 4.6 CY
POUR #3 CAP 22.4 CY
POUR #4 LATERAL GUIDE 0.1 CY
TOTAL CY 42.1

BENT #2

BAR	NO.	SIZE	TYPE	LENGTH	WEIGHT
B1	8	10	STR	39'-2"	1,348
B2	6	10	1	42'-0"	1,084
B3	4	6	STR	39'-2"	235
B4	2	4	STR	3'-6"	5
B5	2	4	STR	4'-0"	5
D1	40	6	STR	1'-6"	90
M1	24	10	2	6'-6"	671
S1	36	5	3	11'-8"	438
S2	2	4	4	3'-6"	5
S3	2	4	4	3'-11"	6
S4	2	4	4	4'-4"	6
S5	2	4	4	4'-8"	7
T1	36	6	STR	8'-6"	460
T2	36	8	1	10'-4"	993
U1	6	4	4	6'-0"	24
U2	6	4	4	5'-10"	23
V3	24	10	2	10'-2"	1,050

REINFORCING STEEL TOTAL 6,450 LB

SPIRAL COLUMN REINFORCING STEEL

BAR	NO.	SIZE	TYPE	LENGTH	WEIGHT
SP-3	2	**	5	284'-10"	381

SPIRAL COLUMN REINF. STEEL TOTAL 381 LB

POUR #1 FOOTING 15 CY
POUR #2 COLUMN 4.5 CY
POUR #3 CAP 22.4 CY
POUR #4 LATERAL GUIDE 0.1 CY
TOTAL CY 42.0

** NOTE: THE "SP" SPIRAL REINFORCING STEEL SHALL BE W20 OR D-20 COLD DRAWN WIRE OR #4 PLAIN OR DEFORMED BAR.

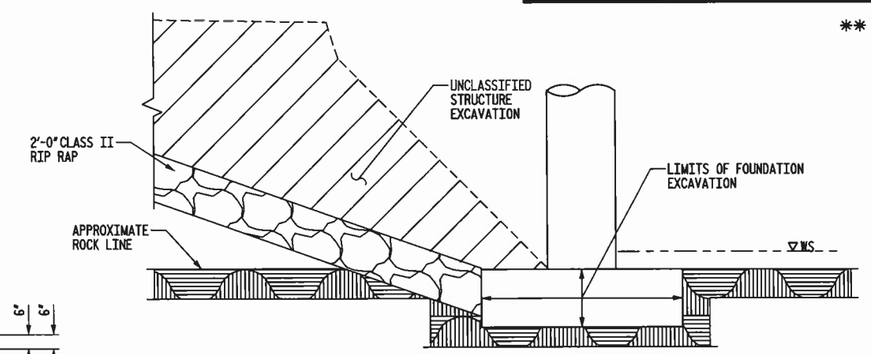

EXCAVATION AND EMBANKMENT

(BENT 1 SHOWN, BENT 2 SIMILAR)

NOTE:
CLASS II RIP RAP SHALL BE PAID FOR AT THE UNIT PRICE BID FOR CLASS II RIP RAP PER TON. FOUNDATION EXCAVATION COST SHALL BE INCLUDED IN THE LUMP SUM PRICE FOR EXCAVATION AND EMBANKMENT.

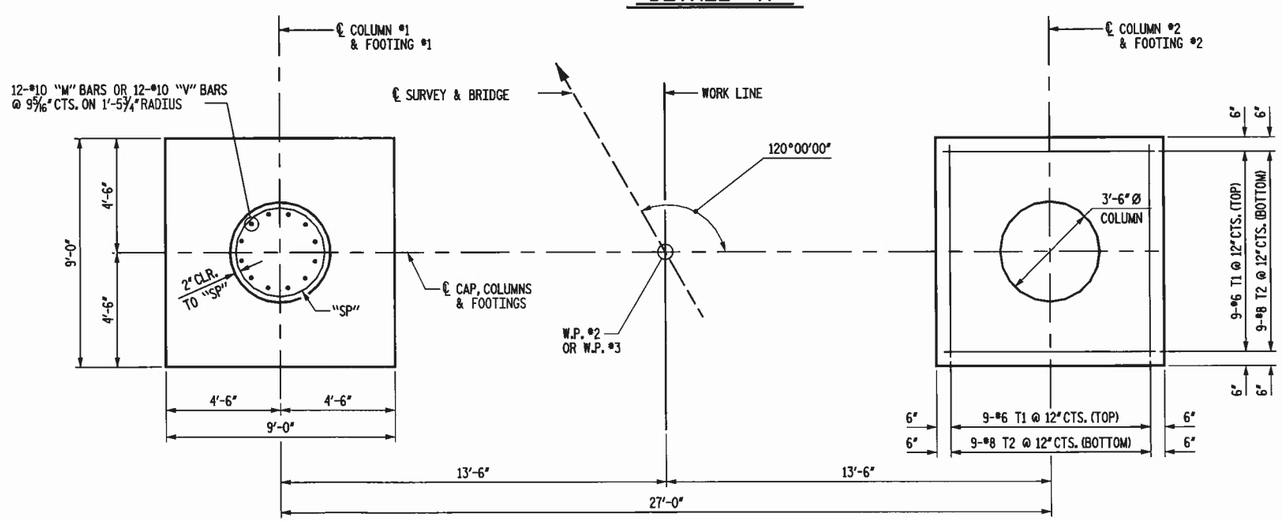

PLAN OF FOOTINGS

DETAILS SHOWN FOR FOOTINGS AND COLUMNS ARE TYPICAL.

NOT TO SCALE

PROJECT NO. 42566
COUNTY: STANLY
STATION: 16+08.00
REPLACES BRIDGE NO. 34

STATE OF NORTH CAROLINA
DEPARTMENT OF TRANSPORTATION
RALEIGH

SUBSTRUCTURE
BENTS #1 & #2

Florence & Hutcheson
CONSULTING ENGINEERS
5121 Kingdom Way, Suite 100 Raleigh, NC 27607
NC License No: F-0258

NORTH CAROLINA PROFESSIONAL SEAL 20532 JAMES E. MONDOLFI
7-18-11

REVISIONS						SHEET NO.
NO.	BY	DATE	NO.	BY	DATE	15
1			3			TOTAL SHEETS
2			4			27

DRAWN BY: D.H. CARTER DATE: JUNE 2009
CHECKED BY: J.E. MONDOLFI DATE: JUNE 2009

FILE NAME: p:\roads\stnfd\bridge_34\bb0015_sub03.dgn
PLOT: 5/24/2011 1:48:28 AM Florence & Hutcheson, Inc.

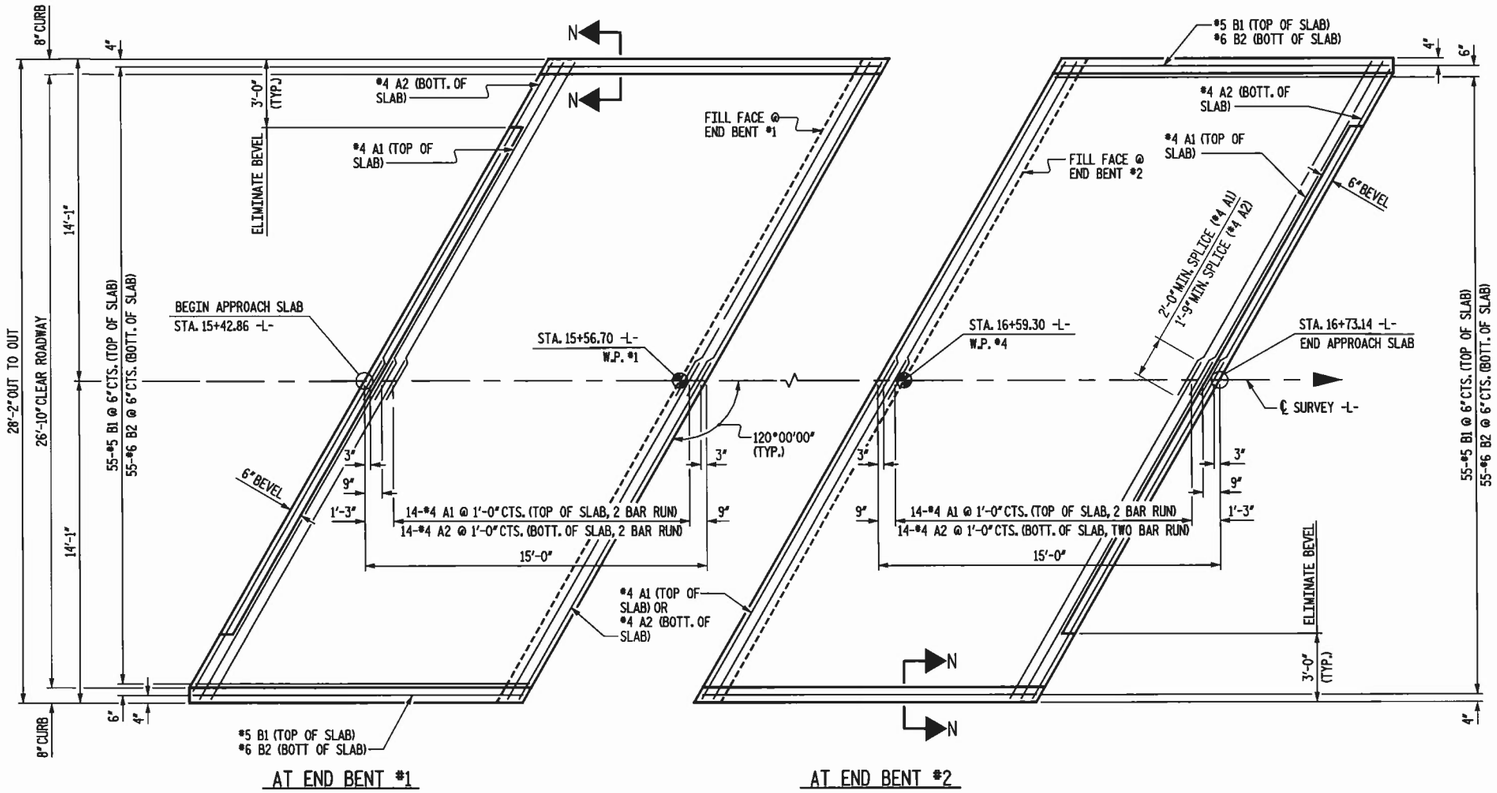

PLAN OF APPROACH SLABS

DIMENSIONS ARE TYPICAL FOR BOTH APPROACH SLABS

NOTES

FOR BRIDGE APPROACH FILL INCLUDING FABRIC, 4"Ø DRAINAGE PIPE, AND #78M STONE BACKFILL, SEE ROADWAY STANDARD DRAWINGS.

APPROACH SLAB SHALL NOT BE CONSTRUCTED PRIOR TO INSTALLATION OF CORED SLAB.

FABRIC SHALL BE TYPE 1 ENGINEERING FABRIC IN ACCORDANCE WITH THE STANDARD SPECIFICATIONS SECTION 1056.

#78M STONE BACKFILL (CLASS V SELECT MATERIAL) SHALL BE IN ACCORDANCE WITH STANDARD SPECIFICATIONS SECTION 1016.

#78M STONE BACKFILL IS TO BE CONTINUOUS ALONG FILL FACE OF END BENT CAP FROM OUTSIDE EDGE TO OUTSIDE EDGE OF APPROACH SLAB.

#78 STONE BACKFILL, 4"Ø DRAINAGE PIPE AND FABRIC SHALL BE INCLUDED IN THE LUMP SUM PRICE BID FOR APPROACH SLABS.

FOR THE 4"Ø DRAINAGE PIPE OUTLET(S), SEE BRIDGE APPROACH FILLS, SHEET 18. AREA BETWEEN THE WINGWALL AND APPROACH SLAB SHALL BE GRADED TO DRAIN THE WATER AWAY FROM THE FILL FACE OF THE BRIDGE AND SHALL BE PAVED.

THE 6" COMP. A.B.C. SHALL BE FLUSH WITH THE ROADWAY END OF THE APPROACH SLAB AND SHALL EXTEND 1'-0" OUTSIDE OF EACH EDGE OF THE APPROACH SLAB.

THE CONTRACTOR MAY USE 4" TYPE B-25.0B ASPHALT CONCRETE BASE COURSE IN LIEU OF 6" COMP. A.B.C. IF THIS OPTION IS USED, THE BASE COURSE SHALL BE FLUSH WITH THE ROADWAY END OF THE APPROACH SLAB, AND THE WIDTH SHALL BE THE SAME AS THAT OF THE APPROACH SLAB.

THE CONTRACTOR MAY USE 5" CLASS "A" CONCRETE BASE IN LIEU OF 6" COMP. A.B.C. IF THIS OPTION IS USED, THE CONCRETE BASE SHALL BE FLUSH WITH THE ROADWAY END OF THE APPROACH SLAB, AND THE WIDTH SHALL BE THE SAME AS THAT OF THE APPROACH SLAB. THE CONCRETE SHALL BE FINISHED TO A SMOOTH SURFACE AND A LAYER OF 30 LB ROOFING FELT SHALL BE PLACED BETWEEN THE CONCRETE BASE AND THE APPROACH SLAB TO PREVENT BOND. THE APPROACH SLAB SHALL NOT BE CAST UNTIL THE CONCRETE BASE HAS REACHED AN AGE OF THREE CURING DAYS.

FOR JOINT DETAILS, SEE "PRESTRESSED CONCRETE CORED SLAB UNIT" SHEETS.

THE JOINT AT THE END BENT SHALL BE GROUTED AS SOON AS PRACTICAL AFTER THE CONSTRUCTION OF THE APPROACH SLABS.

APPROACH SLAB GROOVING IS NOT REQUIRED.

BILL OF MATERIAL

APPROACH SLAB AT END BENT #1

BAR	NO.	SIZE	TYPE	LENGTH	WEIGHT
*A1	32	#4	STR	17'-1"	365
A2	32	#4	STR	17'- 0"	363
*B1	56	#5	STR	14'- 1"	823
B2	56	#6	STR	14'- 7"	1227
REINFORCING STEEL				LBS.	1590
* EPOXY COATED REINFORCING STEEL				LBS.	1188
CLASS AA CONCRETE					
AT END BENT #1				C. Y.	20.0

APPROACH SLAB AT END BENT #2

BAR	NO.	SIZE	TYPE	LENGTH	WEIGHT
*A1	32	#4	STR	17'-1"	365
A2	32	#4	STR	17'- 0"	363
*B1	56	#5	STR	14'- 1"	823
B2	56	#6	STR	14'- 7"	1227
REINFORCING STEEL				LBS.	1590
* EPOXY COATED REINFORCING STEEL				LBS.	1188
CLASS AA CONCRETE					
AT END BENT #2				C. Y.	20.0

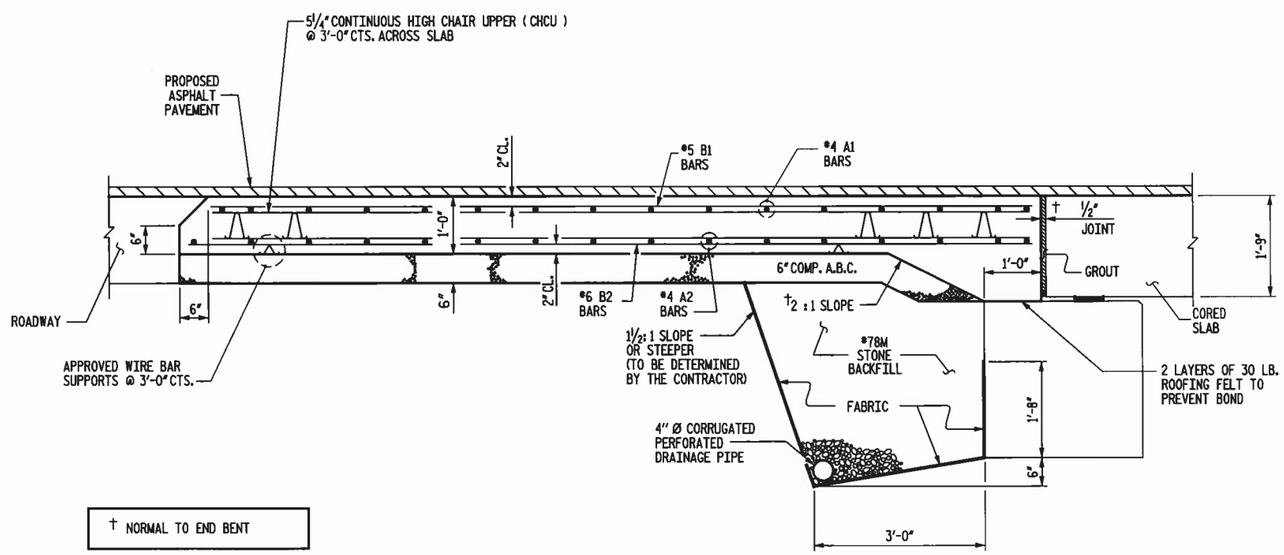

† NORMAL TO END BENT

SECTION THRU SLAB

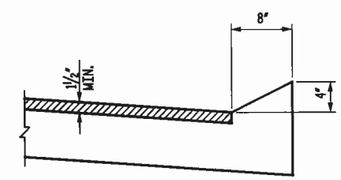

SECTION N-N

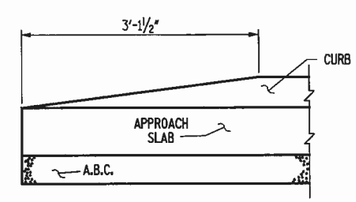

END OF CURB WITHOUT SHOULDER BERM GUTTER

CURB DETAILS

NOT TO SCALE

Florence & Hutcheson
CONSULTING ENGINEERS
5121 Kingdom Way, Suite 100 Raleigh, NC 27607
NC License No: F-0258

NORTH CAROLINA PROFESSIONAL SEAL 20532 ENGINEER JAMES E. MONDOLFI
7-18-11

PROJECT NO. 42566
COUNTY: STANLY
STATION: 16+08.00
REPLACES BRIDGE NO. 34

STATE OF NORTH CAROLINA
DEPARTMENT OF TRANSPORTATION
RALEIGH

APPROACH SLAB
26'-10" CLEAR ROADWAY
120° SKEW
(SUB REGIONAL TIER)

REVISIONS						SHEET NO.
NO.	BY	DATE	NO.	BY	DATE	16
1			3			TOTAL SHEETS
2			4			27

DRAWN BY: D.H. CARTER DATE: JUNE 2009
CHECKED BY: J.E. MONDOLFI DATE: JUNE 2009

PLOT: 5/24/2011 11:05:22 AM Florence & Hutcheson, Inc.
FILE NAME: p:\roadway\proj_34\sub16\approach\bd0115_sd_sub.dgn

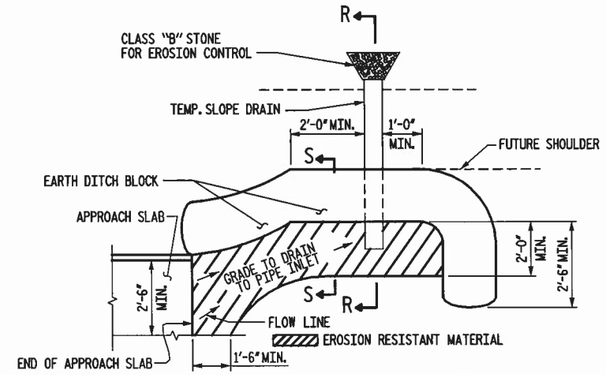

NOTE: IMMEDIATELY AFTER THE CONSTRUCTION OF THE APPROACH SLAB, THE CONTRACTOR SHALL PROVIDE TEMPORARY BERM AND SLOPE DRAIN. CONTRACTOR SHALL GRADE TO PIPE INLET AND PROVIDE EROSION RESISTANT MATERIAL AS SHOWN. THE EROSION RESISTANT MATERIAL SHALL BE EITHER 1) ASPHALT PLANT MIX, TYPE 1 OR TYPE 2, MIN. 2" DEPTH, 2) EROSION CONTROL MAT, OR 3) CONCRETE, AS DIRECTED BY THE ENGINEER. THE SLOPE DRAIN SHALL CONSIST OF A NON-PERFORATED TEMPORARY DRAINAGE PIPE, 12 INCHES IN DIAMETER.

PLAN VIEW

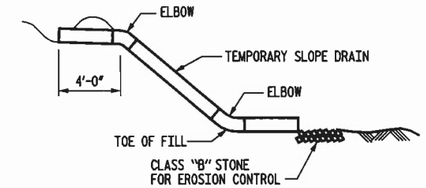

SECTION R-R

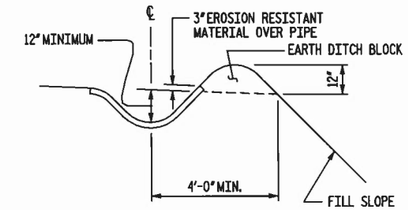

SECTION S-S

TEMPORARY BERM AND SLOPE DRAIN DETAILS

(TO BE USED WHEN SHOULDER BERM GUTTER IS REQUIRED)

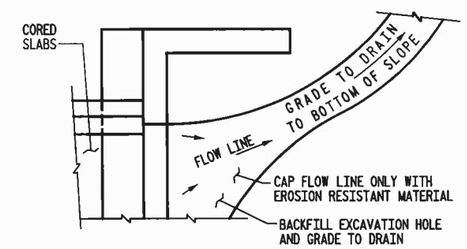

NOTE: IF THE APPROACH SLAB IS NOT CONSTRUCTED IMMEDIATELY AFTER THE BACKFILLING OF THE END BENT EXCAVATION, GRADE TO DRAIN TO THE BOTTOM OF THE SLOPE AND PROVIDE EROSION RESISTANT MATERIAL, SUCH AS FIBERGLASS ROVING OR AS DIRECTED BY THE ENGINEER TO PREVENT SOIL EROSION AND TO PROTECT THE AREA ADJACENT TO THE STRUCTURE. THE CONTRACTOR WILL BE REQUIRED TO REMOVE THESE MATERIALS PRIOR TO CONSTRUCTION OF THE APPROACH SLAB.

TEMPORARY DRAINAGE DETAIL

PROJECT NO. 42566
COUNTY: STANLY
STATION: 16+08.00
REPLACES BRIDGE NO. 34

STATE OF NORTH CAROLINA
DEPARTMENT OF TRANSPORTATION
RALEIGH

BRIDGE APPROACH
SLAB DETAILS

REVISIONS						SHEET NO.
NO.	BY	DATE	NO.	BY	DATE	17
1			3			TOTAL SHEETS
2			4			27

NORTH CAROLINA PROFESSIONAL SEAL 20532 JAMES E. MONDOLFI
7-18-11

Florence & Hutcheson
CONSULTING ENGINEERS
5121 Kingdom Way, Suite 100 Raleigh, NC 27607
NC License No: F-0258

NOT TO SCALE

DRAWN BY: D.H. CARTER DATE: JUNE 2009
CHECKED BY: J.E. MONDOLFI DATE: JUNE 2009

PLOT: 5/24/2011 11:08:23 AM Florence & Hutcheson, Inc.
FILE NAME: p:\roan\dot\Forms_3\sub\BR40\roundhouse\B3115_sd_m2.dgn

PROJECT REFERENCE NO.	SHEET NO.
BK-5115	18

STATE OF
NORTH CAROLINA
DEPT. OF TRANSPORTATION
DIVISION OF HIGHWAYS
RALEIGH, N.C.

ENGLISH DETAIL DRAWING FOR
BRIDGE APPROACH FILLS
CORED SLAB & BOX BEAM BRIDGES
SUB REGIONAL TIER

SHEET 1 OF 2
422D11

STATE OF
NORTH CAROLINA
DEPT. OF TRANSPORTATION
DIVISION OF HIGHWAYS
RALEIGH, N.C.

ENGLISH DETAIL DRAWING FOR
BRIDGE APPROACH FILLS
CORED SLAB & BOX BEAM BRIDGES
SUB REGIONAL TIER

SHEET 2 OF 2
422D11

PROJECT SERVICES UNIT
STANDARDS AND SPECIAL DESIGN
Office 919-250-4128 FAX 919-250-4119

BRIDGE APPROACH FILLS
CORED SLAB & BOX BEAM BRIDGES
SUB REGIONAL TIER

ORIGINAL BY: K. A. Kempf DATE: 6-10-08
MODIFIED BY: DATE:
CHECKED BY: DATE: 4/7/09
FILE SPEC.: kkempf\english\bridge approach fills.dgn

26-JUN-2008 15:32
s:\contracts\s8237\rpt\special details\kkempf\english\bridge approach fill.dgn
kkempf AT PS237RPT

DATUM DESCRIPTION

THE LOCALIZED COORDINATE SYSTEM DEVELOPED FOR THIS PROJECT IS BASED ON THE STATE PLANE COORDINATES ESTABLISHED BY ESP FOR MONUMENT "BL-1"
WITH NAD 83 STATE PLANE GRID COORDINATES OF NORTHING: 615155.5180(ft) EASTING: 1605167.0520(ft)
THE AVERAGE COMBINED GRID FACTOR USED ON THIS PROJECT (GROUND TO GRID) IS: .999849176
THE N.C. LAMBERT GRID BEARING AND LOCALIZED HORIZONTAL GROUND DISTANCE FROM "GPS-1" TO -L- 12+50.00 STATION IS N 25° 20' 55.6", 169.31'
ALL LINEAR DIMENSIONS ARE LOCALIZED HORIZONTAL DISTANCES
VERTICAL DATUM USED IS NAVD 88

RIGHT OF WAY AREA DATA

PARCEL NO.	PROPERTY OWNERS NAME	TOTAL ACREAGE	AREA TAKEN	AREA REMAINING RIGHT	AREA REMAINING LEFT	CONSTR. EASEMENT	PERMANENT DRAINAGE EASEMENT	TEMPORARY DRAINAGE EASEMENT
1	LANE EUGENE VANHOY					3483 sf		
2	ALVA G. SELLS					1474 sf		
3	KELLY E. VANHOY		0.12 ac					

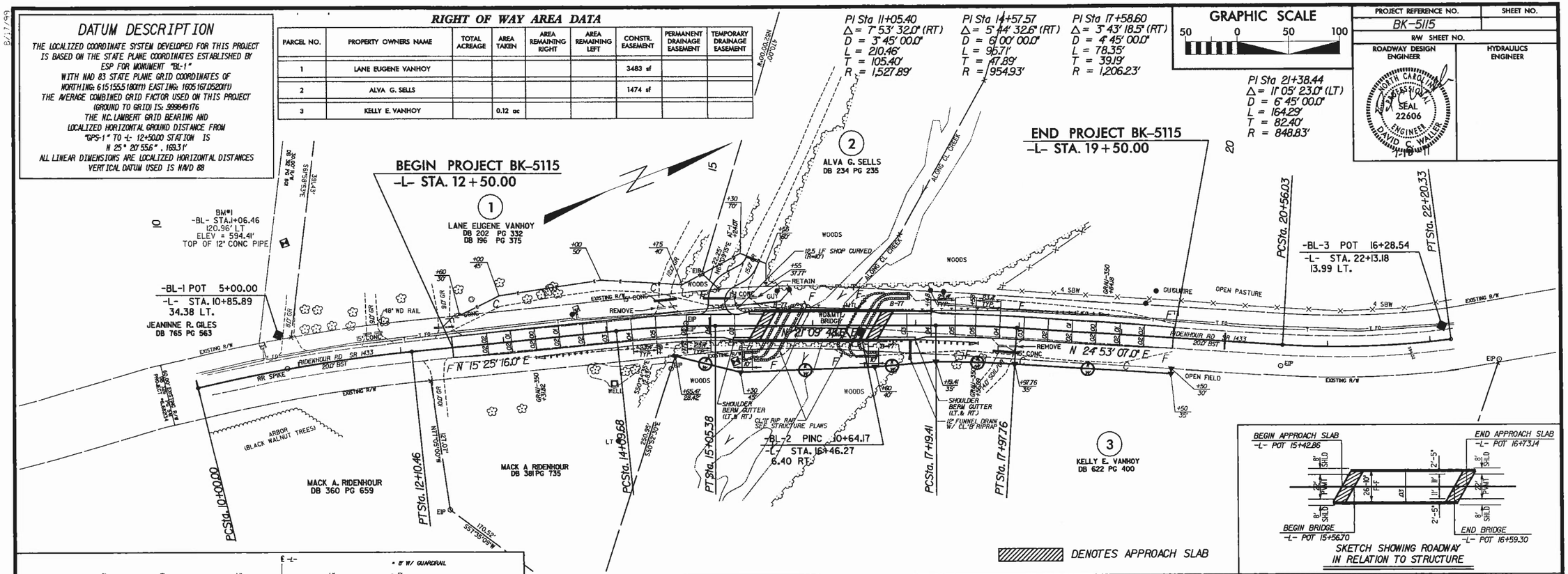

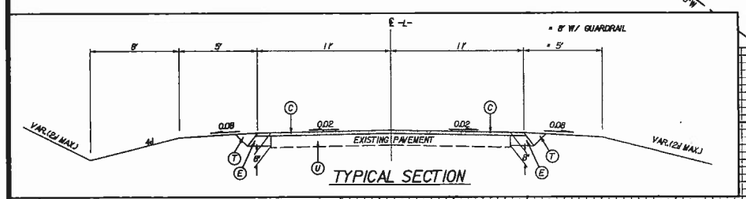

PAVEMENT SCHEDULE	
C	2½" SURFACE COURSE, TYPE SF9.5A
E	5½" BASE COURSE, TYPE B25.0B
T	EARTH MATERIAL
U	EXISTING PAVEMENT

BM #1
-L- STA. 11+06.45, 120.96' LT
TOP OF 12" CONC. PIPE
EL. 594.41

BM #2
-L- STA. 15+25.06, 33.82' RT
RR SPIKE IN BASE OF 30" SWEET GUM
EL. 580.18

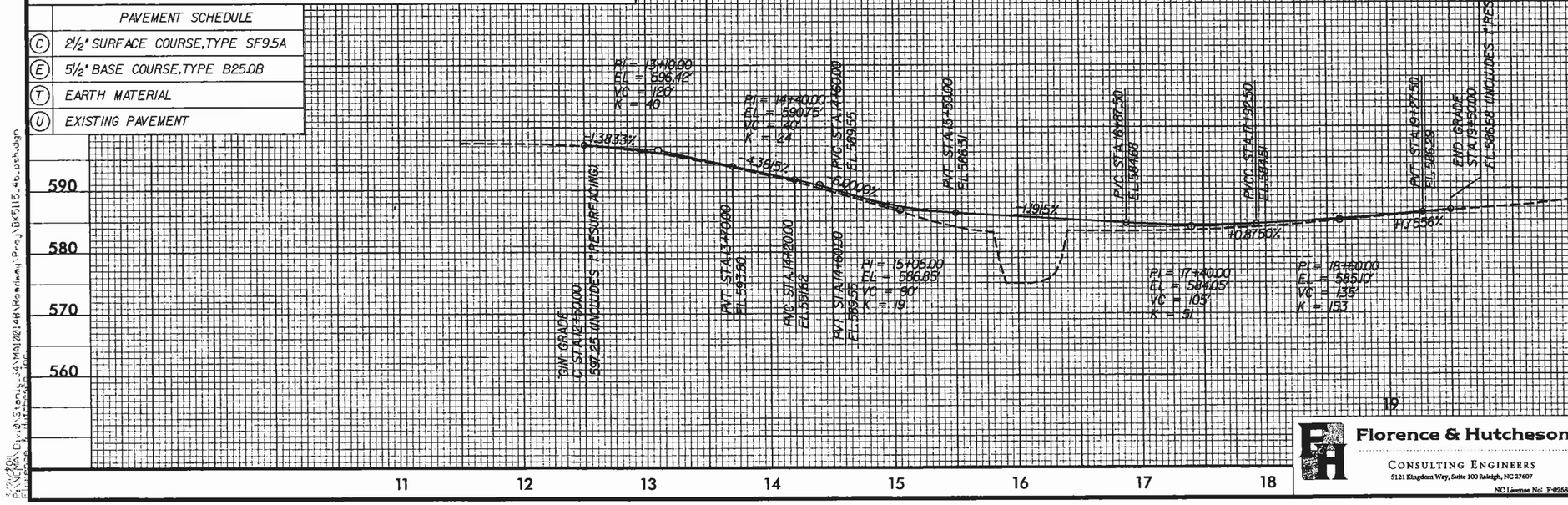

PROJECT REFERENCE NO.	SHEET NO.
BK-5115	
R/W SHEET NO.	
ROADWAY DESIGN ENGINEER	HYDRAULICS ENGINEER

NORTH CAROLINA PROFESSIONAL SEAL 22606 ENGINEER DAVID S. WALKER 1-16-09

PROJECT NO. 42566
COUNTY: STANLY
STATION: 16+08.00
REPLACES BRIDGE NO. 34

STATE OF NORTH CAROLINA
DEPARTMENT OF TRANSPORTATION
RALEIGH

BRIDGE NO. 34 ON SR 1433 OVER BIG BEAR CREEK

Florence & Hutcheson
CONSULTING ENGINEERS
5121 Kingdom Way, Suite 100 Raleigh, NC 27607
NC License No: F-0258

REVISIONS						
NO.	BY	DATE	NO.	BY	DATE	
1			3			
2			4			

SHEET NO. 19
TOTAL SHEETS 27

PROJECT REFERENCE NO.	SHEET NO.
BK-5115	EC-1
R/W SHEET NO.	
ROADWAY DESIGN ENGINEER	HYDRAULICS ENGINEER

EROSION CONTROL PLAN

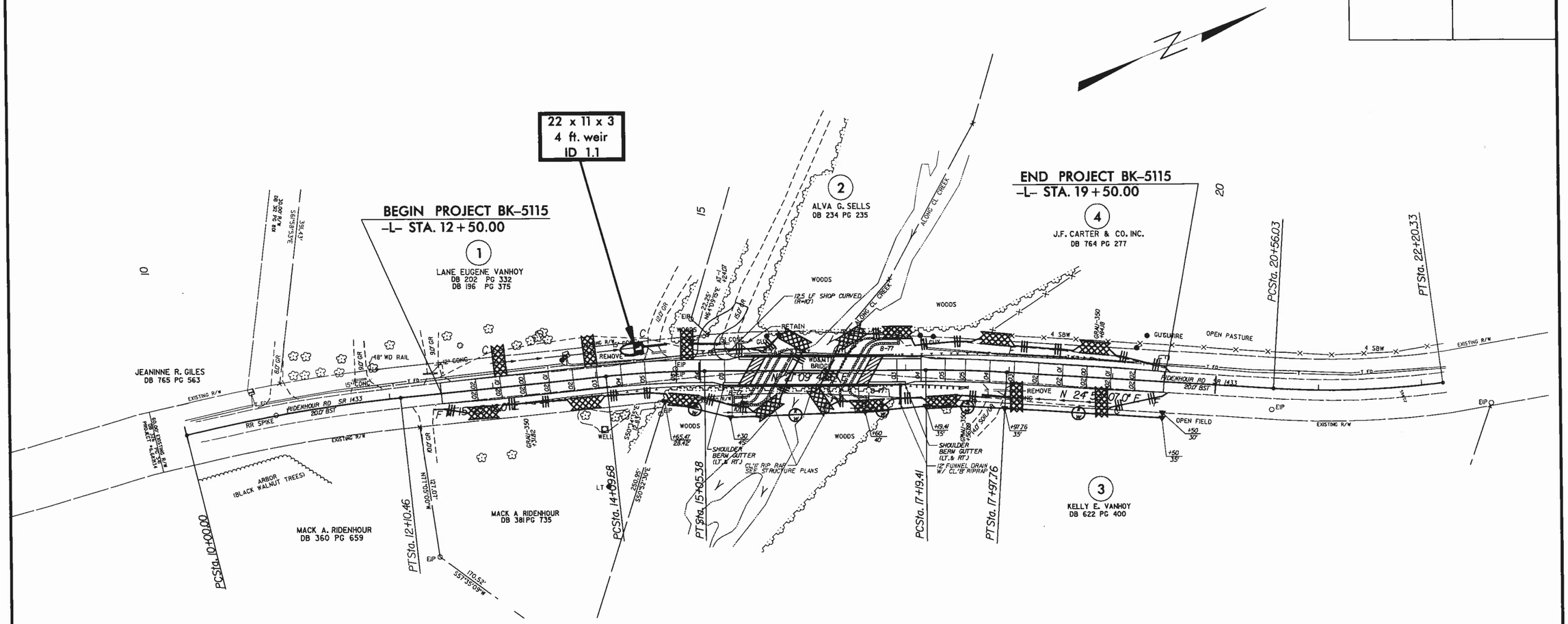

Std. #	Description	Symbol
1605.01	Temporary Silt Fence	
1607.01	Gravel Construction Entrance	
1622.01	Temporary Berms and Slope Drains	
1630.06	Special Stilling Basins	
1633.01	Temporary Rock Silt Check Type-A	
1634.02	Temporary Rock Sediment Dam Type-B	

NOTES: ANY DEVIATION FROM OPTIONS GIVEN WILL REQUIRE PRIOR APPROVAL BY ENGINEER.

ADDITIONAL EROSION CONTROL DEVICES MAY NEED TO BE INSTALLED AS DIRECTED BY THE ENGINEER.

ROADSIDE ENVIRONMENTAL UNIT
DEPARTMENT OF TRANSPORTATION
DIVISION OF HIGHWAYS
RALEIGH, N.C.

2006 STANDARD SPECIFICATIONS

PROJECT NO. 42566
COUNTY: STANLY
STATION: 16+08.00
REPLACES BRIDGE NO. 34

STATE OF NORTH CAROLINA
DEPARTMENT OF TRANSPORTATION
RALEIGH

BRIDGE NO. 34 ON SR 1433
OVER BIG BEAR CREEK

REVISIONS						SHEET NO.
NO.	BY	DATE	NO.	BY	DATE	20
1			3			TOTAL SHEETS
2			4			27

PROJECT REFERENCE NO.	SHEET NO.
BK-5115	EC-2
R/W SHEET NO.	
ROADWAY DESIGN ENGINEER	HYDRAULICS ENGINEER

EROSION CONTROL PLAN

COIR FIBER BAFFLE DETAIL

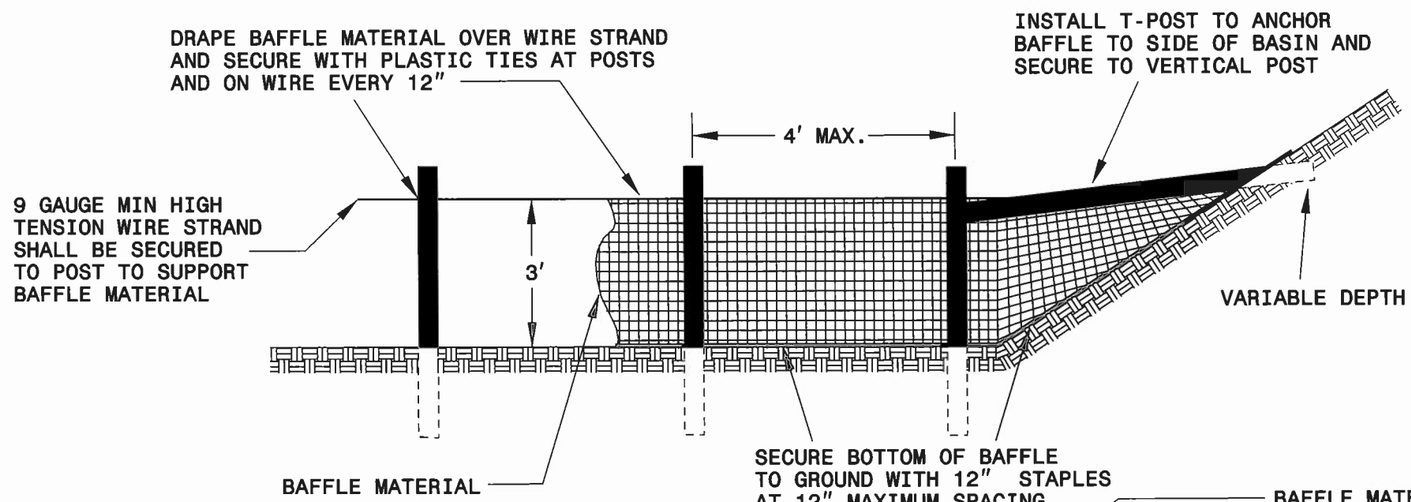

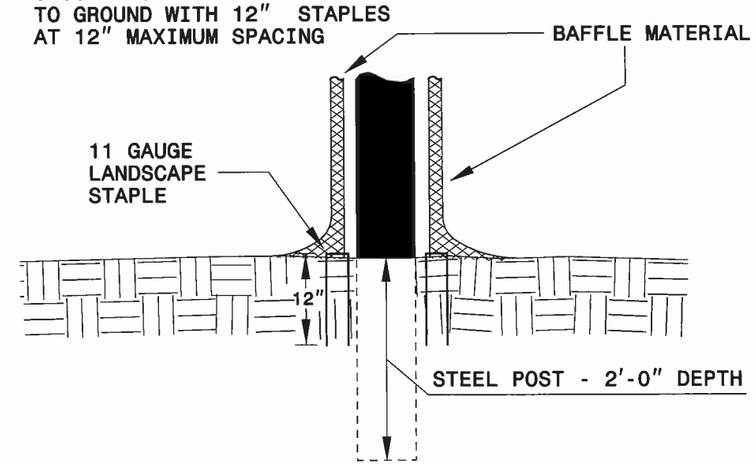

BAFFLE MATERIAL SHALL BE SECURED TO THE BOTTOM AND SIDES OF BASIN USING 12" LANDSCAPE STAPLES

NOTES:

1. INSTALL THREE(3) COIR FIBER BAFFLES IN SILT BASINS AND SEDIMENT DAMS AT DRAINAGE OUTLETS WITH A SPACING OF ¼ THE BASIN LENGTH.

2. TWO(2) COIR FIBER BAFFLES CAN BE INSTALLED IN SILT BASINS AND DAMS LESS THAN 20 FT. IN LENGTH WITH A SPACING OF 1/3 THE BASIN LENGTH.

3. TOP HEIGHT OF COIR FIBER BAFFLES SHALL NOT BE BELOW BASE OF EMERGENCY SPILLWAY ELEVATION.

NOTES: ANY DEVIATION FROM OPTIONS GIVEN WILL REQUIRE PRIOR APPROVAL BY ENGINEER.

ADDITIONAL EROSION CONTROL DEVICES MAY NEED TO BE INSTALLED AS DIRECTED BY THE ENGINEER.

ROADSIDE ENVIRONMENTAL UNIT
DEPARTMENT OF TRANSPORTATION
DIVISION OF HIGHWAYS
RALEIGH, N.C.

2006 STANDARD SPECIFICATIONS

PROJECT NO. 42566
COUNTY: STANLY
STATION: 16+08.00
REPLACES BRIDGE NO. 34

STATE OF NORTH CAROLINA
DEPARTMENT OF TRANSPORTATION
RALEIGH

BRIDGE NO. 34 ON SR 1433
OVER BIG BEAR CREEK

REVISIONS						SHEET NO.
NO.	BY	DATE	NO.	BY	DATE	21
1			3			TOTAL SHEETS
2			4			27

PROJECT REFERENCE NO.	SHEET NO.
BK-5115	EC-3
R/W SHEET NO.	
ROADWAY DESIGN ENGINEER	HYDRAULICS ENGINEER

EROSION CONTROL PLAN

MATTING INSTALLATION DETAIL

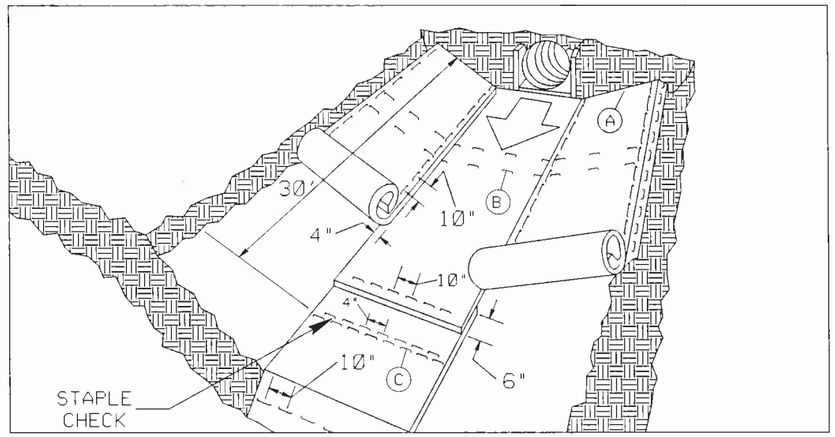

MATTING IN DITCHES

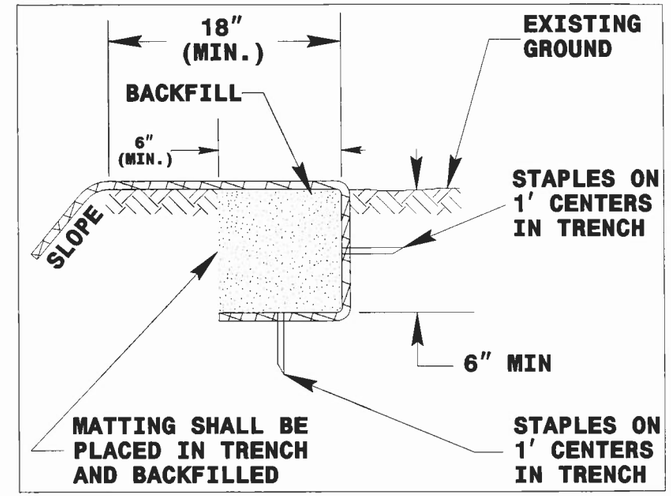

DIAGRAM (A)

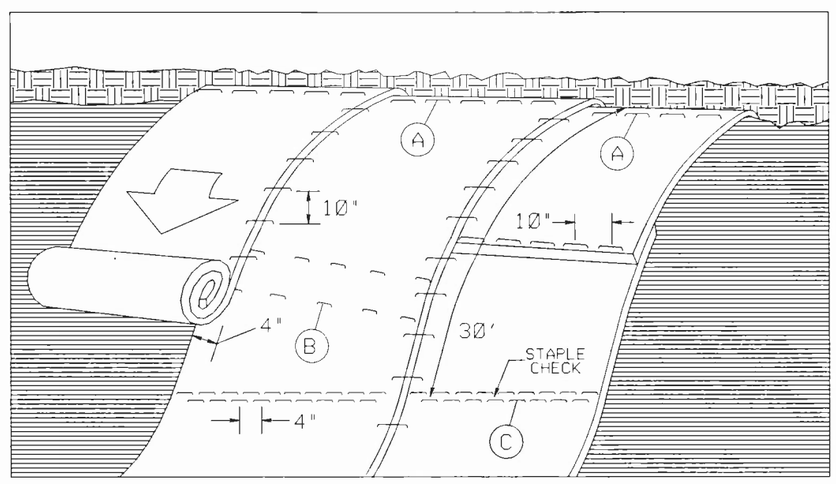

MATTING ON SLOPES

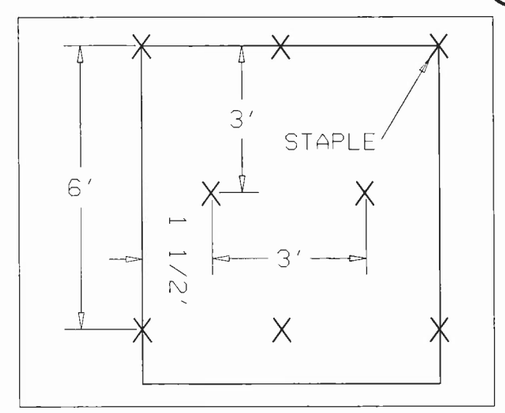

DIAGRAM (B)

STAPLE CHECK PATTERN

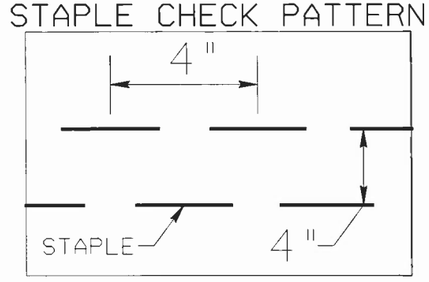

DIAGRAM (C)

NOT TO SCALE

NOTES:

THIS DETAIL APPLIES TO STRAW, EXCELSIOR, AND PERMANENT SOIL REINFORCEMENT MAT (PSRM) INSTALLATION.

STAPLES SHALL BE NO. 11 GAUGE STEEL WIRE FORMED INTO A "U" SHAPE WITH A MINIMUM THROAT WIDTH OF 1 INCH AND NOT LESS THAN 6 INCHES IN LENGTH.

NOTES: ANY DEVIATION FROM OPTIONS GIVEN WILL REQUIRE PRIOR APPROVAL BY ENGINEER.

ADDITIONAL EROSION CONTROL DEVICES MAY NEED TO BE INSTALLED AS DIRECTED BY THE ENGINEER.

ROADSIDE ENVIRONMENTAL UNIT
DEPARTMENT OF TRANSPORTATION
DIVISION OF HIGHWAYS
RALEIGH, N.C.

2006 STANDARD SPECIFICATIONS

PROJECT NO. 42566
COUNTY: STANLY
STATION: 16+08.00
REPLACES BRIDGE NO. 34

STATE OF NORTH CAROLINA
DEPARTMENT OF TRANSPORTATION
RALEIGH

BRIDGE NO. 34 ON SR 1433
OVER BIG BEAR CREEK

REVISIONS						SHEET NO.
NO.	BY	DATE	NO.	BY	DATE	22
1			3			TOTAL SHEETS
2			4			27

PROJECT REFERENCE NO.	SHEET NO.
BK-5115	
R/W SHEET NO.	

NORTH CAROLINA PROFESSIONAL SEAL 15876 ENGINEER MICHAEL I. NEMA
7-18-11

ROADWAY STANDARD DRAWINGS

THE FOLLOWING ROADWAY STANDARDS AS APPEAR IN "ROADWAY STANDARD DRAWINGS"-ROADWAY DESIGN UNIT-N.C. DEPARTMENT OF TRANSPORTATION-RALEIGH, N.C., DATED JULY 2006 ARE APPLICABLE TO THIS PROJECT AND BY REFERENCE HEREBY ARE CONSIDERED A PART OF THESE PLANS:

STD. NO.	TITLE
1101.03	TEMPORARY ROAD CLOSURES
1101.04	TEMPORARY SHOULDER CLOSURES
1110.01	STATIONARY WORK ZONE SIGNS
1145.01	BARRICADES
1205.01	PAVEMENT MARKINGS - LINE TYPES & OFFSETS
1205.02	PAVEMENT MARKINGS - 2 LANE & MULTILANE ROADWAYS
1205.12	PAVEMENT MARKINGS - BRIDGES
1261.01	GUARDRAIL & BARRIER DELINEATOR SPACING
1261.02	GUARDRAIL & BARRIER DELINEATOR TYPES
1262.01	GUARDRAIL END DELINEATION

GENERAL NOTES

CHANGES MAY BE REQUIRED WHEN PHYSICAL DIMENSIONS IN THE DETAIL DRAWINGS, STANDARD DETAILS, AND ROADWAY DETAILS ARE NOT ATTAINABLE TO MEET FIELD CONDITIONS OR RESULT IN DUPLICATE OR UNDESIRED OVERLAPPING OF DEVICES. MODIFICATION MAY INCLUDE: MOVING, SUPPLEMENTING, COVERING, OR REMOVAL OF DEVICES AS DIRECTED BY THE ENGINEER.

THE FOLLOWING GENERAL NOTES APPLY AT ALL TIMES FOR THE DURATION OF THE CONSTRUCTION PROJECT EXCEPT WHEN OTHERWISE NOTED IN THE PLAN OR DIRECTED BY THE ENGINEER.

TRAFFIC PATTERN ALTERATIONS

A) NOTIFY THE ENGINEER TWENTY ONE (21) CALENDAR DAYS PRIOR TO ANY TRAFFIC PATTERN ALTERATION.

SIGNING

B) STATE FORCES WILL BE RESPONSIBLE FOR PROVIDING PERMANENT SIGNING.

C) STATE FORCES WILL PROVIDE SIGNING AND DEVICE REQUIRED TO CLOSE THE ROAD ACCORDING TO THE ROADWAY STANDARD DRAWINGS AND TRAFFIC CONTROL PLANS.

STATE FORCES WILL PROVIDE SIGNING REQUIRED FOR THE OFF-SITE DETOUR ROUTE AS SHOWN IN THE TRAFFIC CONTROL PLANS.

D) STATE FORCES WILL COVER OR REMOVE ALL SIGNS AND DEVICES REQUIRED TO CLOSE THE ROAD WHEN ROAD CLOSURE IS NOT IN OPERATION.

STATE FORCES WILL COVER OR REMOVE ALL SIGNS REQUIRED FOR THE OFF-SITE DETOUR WHEN THE DETOUR IS NOT IN OPERATION.

E) ENSURE ALL NECESSARY SIGNING IS IN PLACE PRIOR TO ALTERING ANY TRAFFIC PATTERN.

TRAFFIC CONTROL DEVICES

F) STATE FORCES WILL PLACE TYPE III BARRICADES, WITH "ROAD CLOSED" SIGN R11-2 ATTACHED, OF SUFFICIENT LENGTH TO CLOSE ENTIRE ROADWAY.

PAVEMENT MARKINGS

G) INSTALL PAVEMENT MARKINGS ON THE FINAL SURFACE AS FOLLOWS:

ROAD NAME	MARKING
SR 1433, RIDENHOUR RD	THERMOPLASTIC

H) TIE PROPOSED PAVEMENT MARKING LINES TO EXISTING PAVEMENT MARKING LINES.

PHASE I

STEP 1: - STATE FORCES WILL, USING ROADWAY STANDARD DRAWING NUMBER 1101.04, SHEET 1 OF 1, INSTALL ALL DETOUR SIGNING KEEPING SIGNS COVERED (SEE SHEET 24).

STEP 2: - STATE FORCES WILL, USING ROADWAY STANDARD DRAWING NUMBER 1101.03, SHEET 1 OF 9, CLOSE SR 1433 (RIDENHOUR RD.) TO TRAFFIC, UNCOVER ALL DETOUR SIGNING AND SHIFT TRAFFIC TO DETOUR (SEE SHEET 24).

STEP 3: - DISMANTLE AND REMOVE EXISTING BRIDGE NUMBER 34.

STEP 4: - COMPLETE CONSTRUCTION OF PROPOSED STRUCTURE, APPROACH ROADWAY TIE-INS, AND ASSOCIATED ITEMS.

STEP 5: - PLACE FINAL PAVEMENT MARKINGS (THERMOPLASTIC) ON SR 1433 (RIDENHOUR RD.).

STEP 6: - STATE FORCES WILL, USING ROADWAY STANDARD DRAWING NUMBER 1101.04, SHEET 1 OF 1, REMOVE ALL DETOUR SIGNING, ALL TRAFFIC CONTROL DEVICES AND OPEN SR 1433 (RIDENHOUR RD.) TO TRAFFIC.

FINAL PAV'T MARKING SCHEDULE

SYMBOL	DESCRIPTION	QUANTITY BREAKDOWN	PAY ITEM	TOTAL QUANTITY
		PAVEMENT MARKING LINES		
			THERMOPLASTIC (4", 90mils)	
TA	WHITE EDGELINE	1,400 LF		
			TOTAL	1,400 LF
			THERMOPLASTIC (4", 120mils)	
TI	YELLOW DOUBLE CENTER LINE	1,400 LF		
			TOTAL	1,400 LF

PROJECT NO. 42566
COUNTY: STANLY
STATION: 16+08.00
REPLACES BRIDGE NO. 34

STATE OF NORTH CAROLINA
DEPARTMENT OF TRANSPORTATION
RALEIGH

BRIDGE NO. 34 ON SR 1433
OVER BIG BEAR CREEK

Florence & Hutcheson
CONSULTING ENGINEERS
5121 Kingdom Way, Suite 100 Raleigh, NC 27607
NC License No: F-0258

REVISIONS						SHEET NO.
NO.	BY	DATE	NO.	BY	DATE	23
1			3			TOTAL SHEETS
2			4			27

PROJECT REFERENCE NO.	SHEET NO.
BK-5115	
R/W SHEET NO.	

NORTH CAROLINA PROFESSIONAL SEAL 15876 ENGINEER MICHAEL T. KIRTON

7-18-11

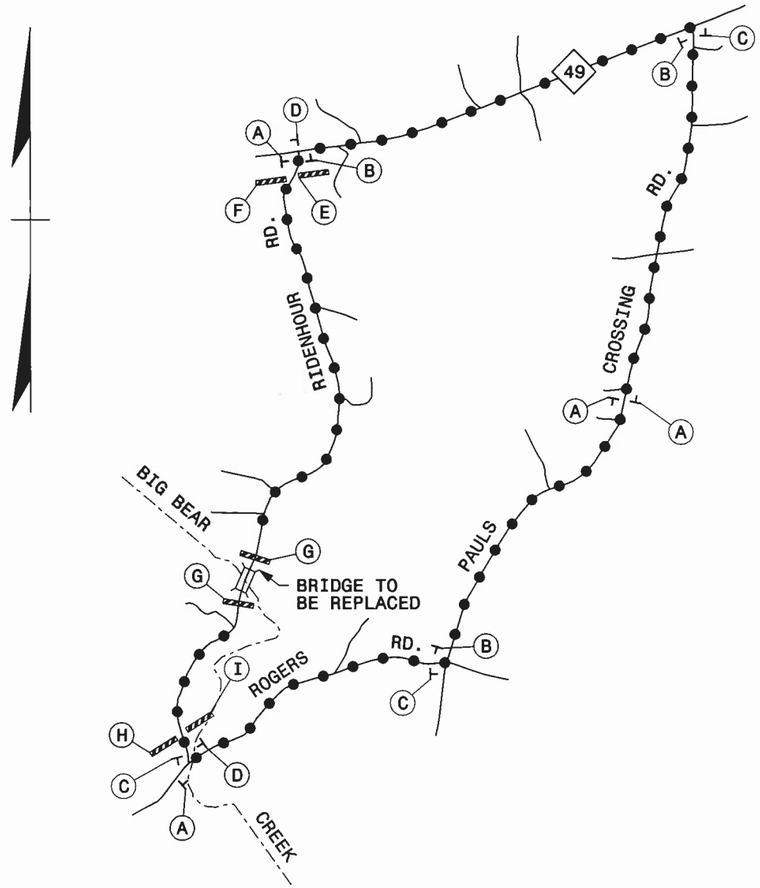

SIGN NUMBER: name
TYPE: D
QUANTITY: 1

SIGN WIDTH: 6'-0"
HEIGHT: 1'-6"
TOTAL AREA: 9.0 Sq.Ft.

BORDER TYPE: FLUSH
RECESS: 0"
WIDTH: 0.75"
RADII: 3"

NO. Z BARS:
LENGTH:

BACKG COLOR: ORANGE
COPY COLOR: BLACK

SYMBOL	X	Y	WID	HT

MAT'L: 0.125" (3.2 mm) ALUMINUM

DESIGN BY: GEP
PROJECT ID: 42566
CHECKED BY: CHECKED
DIV: 10
DATE: Jan 05, 2011

USE NOTES: 1, 4

1. Legend and border shall be direct applied Type III reflective sheeting.
2. Legend and border shall be direct applied non-reflective sheeting.
3. Shields shall be Type III reflective sheeting on 0.032" (0.8mm) aluminum and demountable.
4. Background shall be Type III reflective sheeting.
5. Background shall be Type I reflective sheeting.
6. Center arrow(s) vertically on sign.
7. Bottom panel shall be yellow Type III sheeting. Legend shall be direct applied black non-reflective sheeting. Yellow panel is:

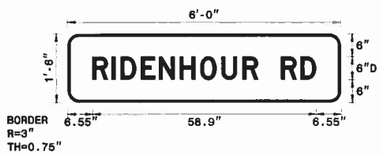

Spacing Factor is 1 unless specified otherwise

LETTER POSITIONS

Letter spacings are to start of next letter

	R	I	D	E	N	H	O	U	R		R	D		Series/Size Text Length
6.5	6.1	2.4	5.4	4.7	5.5	5.4	5.6	5.5	4.1	6	5.1	4.1	6.5	D 2000
														58.9

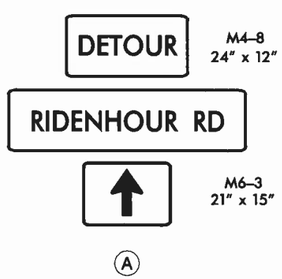

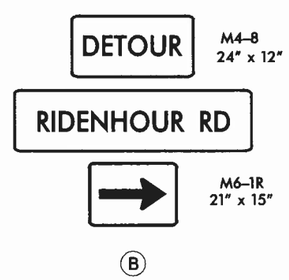

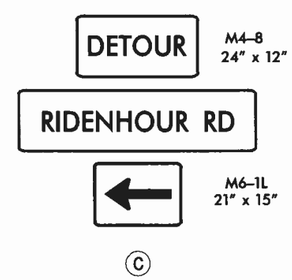

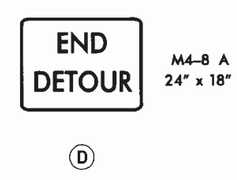

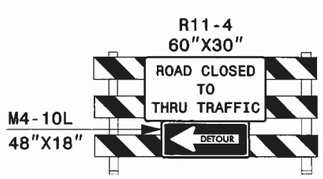

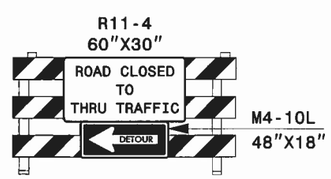

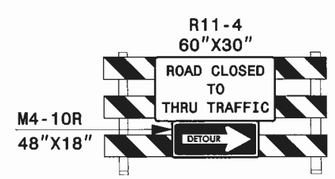

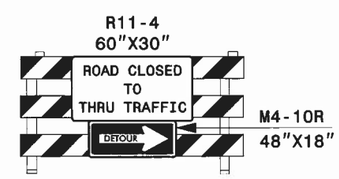

LEGEND

DETOUR ROUTE

PROJECT NO. 42566
COUNTY: STANLY
STATION: 16+08.00
REPLACES BRIDGE NO. 34

STATE OF NORTH CAROLINA
DEPARTMENT OF TRANSPORTATION
RALEIGH

BRIDGE NO. 34 ON SR 1433
OVER BIG BEAR CREEK

Florence & Hutcheson
CONSULTING ENGINEERS
5121 Kingdom Way, Suite 100 Raleigh, NC 27607
NC License No: F-0258

REVISIONS						
NO.	BY	DATE	NO.	BY	DATE	
1			3			
2			4			

SHEET NO. 24
TOTAL SHEETS 27

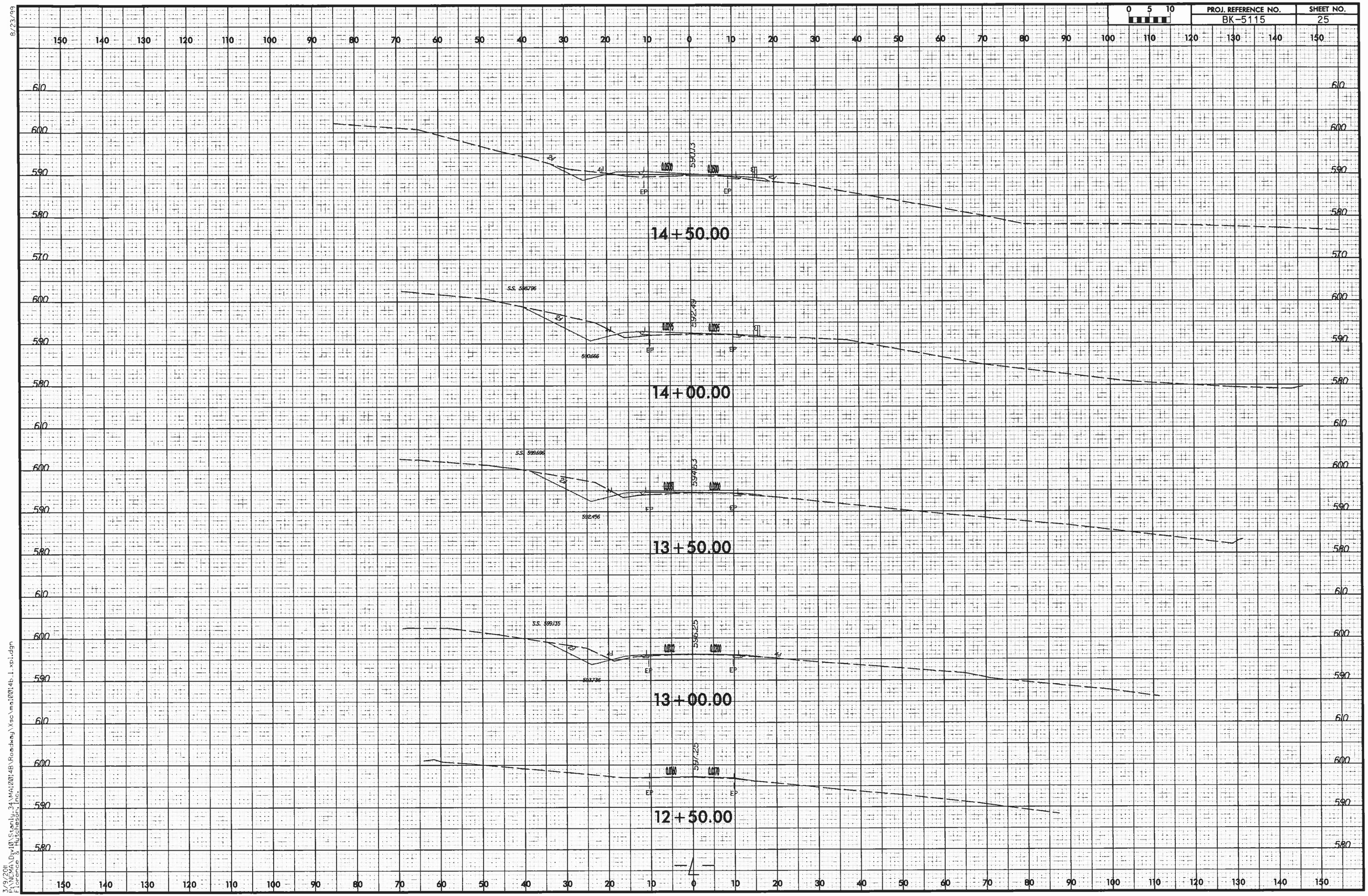

9/23/99

3/9/2001
B:\N1240\Div01\Stanly_34\M412001418\Roadway\xsc\ma12001418_1_xpl.dgn
Florence & Hutcheson, Inc.

8/23/99

0 5 10	PROJ. REFERENCE NO.	SHEET NO.
	BK-5115	26

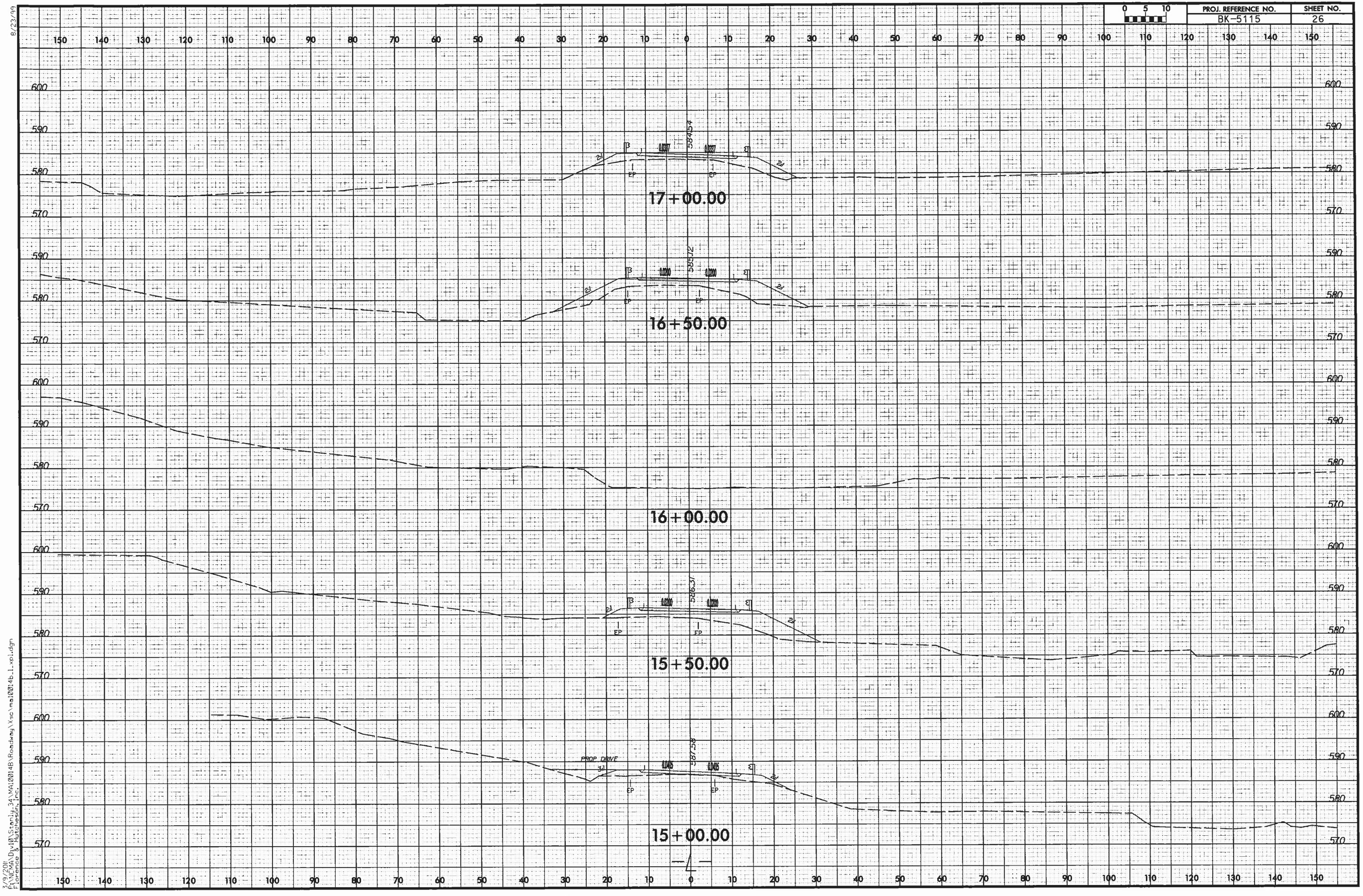

8/19/2011
R:\MCHA\Dyl01\Sterlu_34\MA120014B\Roadway\xsc\ma120014b_1_xp1.dgn
Florence & Hutchesson, Inc.

8/23/99

PROJ. REFERENCE NO.	SHEET NO.
BK-5115	27

0 5 10

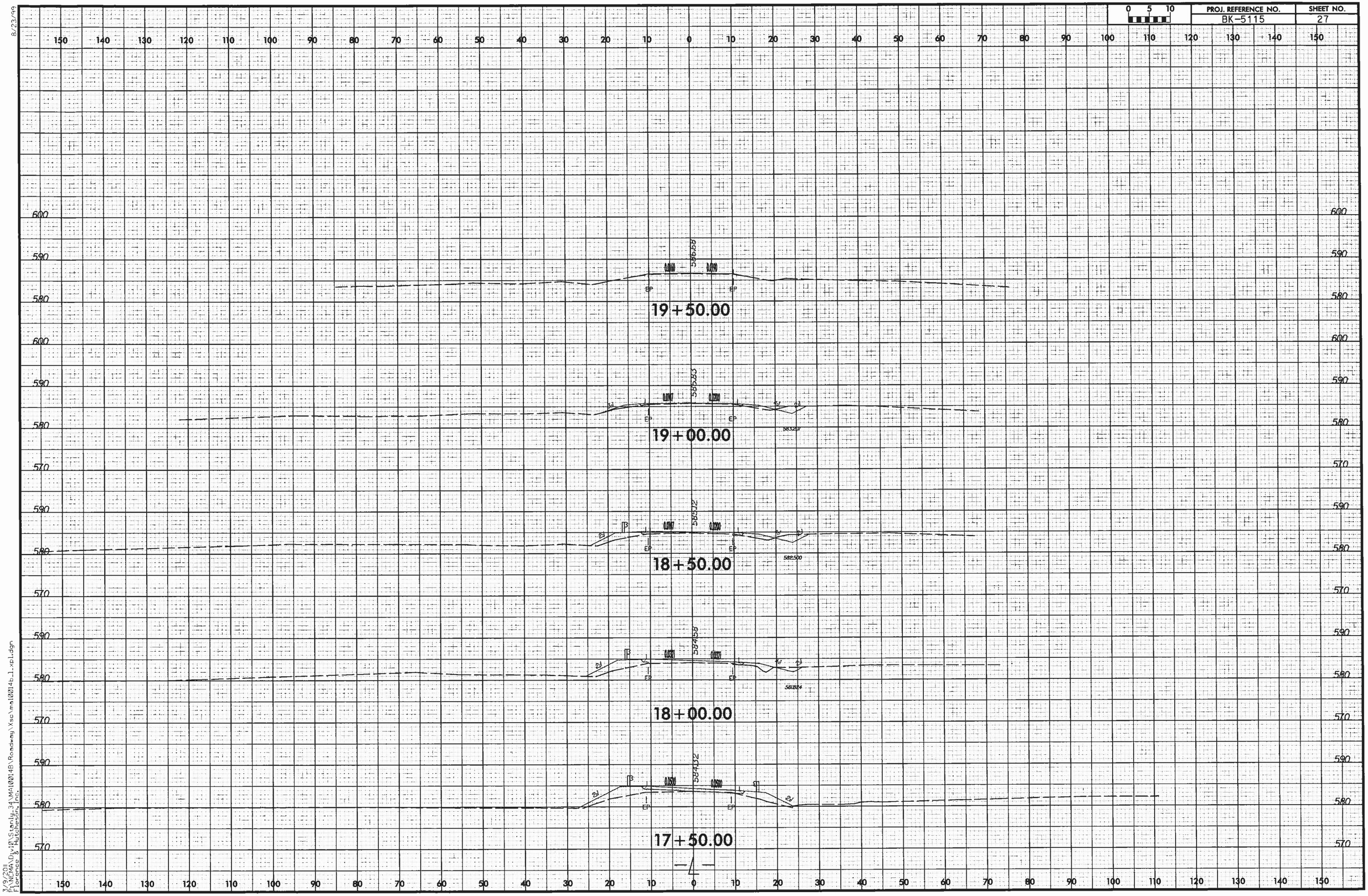

3/9/2011
P:\NCMA\Div12\Stanly_34\M\10014B\Roadway\Xsc\ma10014b_1_xpl.dgn
Florence & Hutchesson, Inc.