STATE	STATE PROJECT REFERENCE NO.	SHEET NO.	TOTAL SHEETS
N.C.	B-5218	1	

STATE PROJ. NO.	F.A. PROJ. NO.	DESCRIPTION
42815.1.1		P.E.

See Sheet 1-A For Index of Sheets

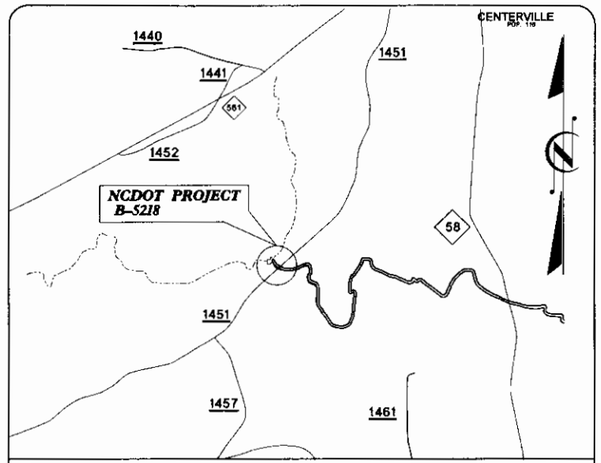

VICINITY MAP

STATE OF NORTH CAROLINA
DIVISION OF HIGHWAYS

FRANKLIN COUNTY

LOCATION: BRIDGE #61 OVER SANDY CREEK ON SR 1451 (LEONARD RD.)

TYPE OF WORK: GRADING, DRAINAGE, PAVING & STRUCTURE

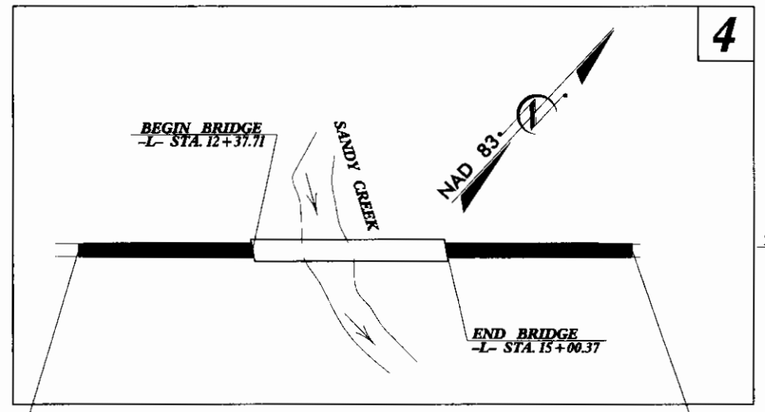

BEGIN NCDOT PROJECT
-L- STA 10+05.00

END NCDOT PROJECT
-L- STA. 17+50.00

INDEX OF SHEETS

Sheet Number	Sheet
1	Title Sheet, Index of Sheets
1-B	Conventional Symbols
2 Thru 2-B	Detail for Method of Pipe Installation & Bridge Approach Fill
3	Summary of Drainage, Summary of Guardrail, Summary of Earthwork and Summary of Pavement Removal
4	Typical Sections, Pavement Schedule, Miscellaneous Details not covered by Roadway Standards, Plan & Profile
EC-1 Thru EC-3	Erosion Control Plans
X-1	Cross-Section Summary Sheet
X-2 Thru X-4	Cross-Sections
S-1 Thru S-25	Structure Plans
SN	Standard Notes
UO-1 thru UO-2	Utilities By Others Plans

TIP PROJECT: B-5218

CONTRACT:

GRAPHIC SCALES

50 25 0 50 100
PLANS

50 25 0 50 100
PROFILE (HORIZONTAL)

10 5 0 10 20
PROFILE (VERTICAL)

DESIGN DATA

ADT 2010	=	230
ADT 2030	=	390
DHV	=	50 %
D	=	10 %
T	=	% *
V	=	55 MPH

* TTST DUAL

PROJECT LENGTH

LENGTH ROADWAY TIP PROJECT B-5218 =	0.091 MILES
LENGTH STRUCTURE TIP PROJECT B-5218 =	0.050 MILES
TOTAL LENGTH TIP PROJECT B-5218 =	0.141 MILES

WETHERILL ENGINEERING

Prepared for the North Carolina Department of Transportation in the Office of:
559 JONES FRANKLIN ROAD
SUITE 144
Raleigh, N.C. 27606
License No. F-0377
Bus. 919 851 8077
Fax. 919 851 8107

2006 STANDARD SPECIFICATIONS

RIGHT OF WAY DATE:

LETTING DATE:

EDWARD G. WETHERILL, PE
PROJECT ENGINEER

GREG S. PURVIS, PE
PROJECT DESIGN ENGINEER

HYDRAULICS ENGINEER

NORTH CAROLINA PROFESSIONAL SEAL ENGINEER JAMES C. DAVIS

SIGNATURE: 5/24/11 P.E.

ROADWAY DESIGN ENGINEER

NORTH CAROLINA PROFESSIONAL SEAL 022999 ENGINEER GREG S. PURVIS

SIGNATURE: 5/24/11 P.E.

DIVISION OF HIGHWAYS
STATE OF NORTH CAROLINA

STATE OF NORTH CAROLINA DEPARTMENT OF TRANSPORTATION

P.E.
STATE HIGHWAY DESIGN ENGINEER

$$$$$SYSTIME$$$$
USERNAME$$$$DGN$$$$

3/15/06

PROJECT REFERENCE NO.	SHEET NO.
B-5218	1-B

Note: Not to Scale

S.U.E. = Subsurface Utility Engineering

STATE OF NORTH CAROLINA
DIVISION OF HIGHWAYS

CONVENTIONAL PLAN SHEET SYMBOLS

BOUNDARIES AND PROPERTY:

- State Line
- County Line
- Township Line
- City Line
- Reservation Line
- Property Line
- Existing Iron Pin — EIP
- Property Corner
- Property Monument — ECM
- Parcel/Sequence Number — 23
- Existing Fence Line
- Proposed Woven Wire Fence
- Proposed Chain Link Fence
- Proposed Barbed Wire Fence
- Existing Wetland Boundary — WLB
- Proposed Wetland Boundary — WLB
- Existing Endangered Animal Boundary — EAB
- Existing Endangered Plant Boundary — EPB

BUILDINGS AND OTHER CULTURE:

- Gas Pump Vent or U/G Tank Cap
- Sign — S
- Well — W
- Small Mine
- Foundation
- Area Outline
- Cemetery
- Building
- School
- Church
- Dam

HYDROLOGY:

- Stream or Body of Water
- Hydro, Pool or Reservoir
- Jurisdictional Stream — JS
- Buffer Zone 1 — BZ 1
- Buffer Zone 2 — BZ 2
- Flow Arrow
- Disappearing Stream
- Spring
- Wetland
- Proposed Lateral, Tail, Head Ditch — FLOW
- False Sump

RAILROADS:

- Standard Gauge — CSX TRANSPORTATION
- RR Signal Milepost — MILEPOST 35
- Switch — SWITCH
- RR Abandoned
- RR Dismantled

RIGHT OF WAY:

- Boseline Control Point
- Existing Right of Way Marker
- Existing Right of Way Line
- Proposed Right of Way Line — RW
- Proposed Right of Way Line with Iron Pin and Cap Marker — RW
- Proposed Right of Way Line with Concrete or Granite Marker — RW
- Existing Control of Access — CA
- Proposed Control of Access — CA
- Existing Easement Line — E
- Proposed Temporary Construction Easement — E
- Proposed Temporory Drainage Easement — TDE
- Proposed Permanent Drainage Easement — PDE
- Proposed Permanent Utility Easement — PUE
- Proposed Temporary Utility Easement — TUE
- Proposed Permanent Easement with Iron Pin and Cap Marker

ROADS AND RELATED FEATURES:

- Existing Edge of Pavement
- Existing Curb
- Proposed Slope Stakes Cut — C
- Proposed Slope Stakes Fill — F
- Proposed Wheel Chair Ramp — WCR
- Existing Metal Guardrail
- Proposed Guardrail
- Existing Cable Guiderail
- Proposed Cable Guiderail
- Equality Symbol
- Pavement Removal

VEGETATION:

- Single Tree
- Single Shrub
- Hedge
- Woods Line
- Orchard
- Vineyard — Vineyard

EXISTING STRUCTURES:

MAJOR:

- Bridge, Tunnel or Box Culvert — CONC
- Bridge Wing Wall, Head Wall and End Wall — CONC WW

MINOR:

- Head and End Wall — CONC HW
- Pipe Culvert
- Footbridge
- Drainage Box: Catch Bosin, DI or JB — CB
- Paved Ditch Gutter
- Storm Sewer Manhole — S
- Storm Sewer — S

UTILITIES:

POWER:

- Existing Power Pole
- Proposed Power Pole
- Existing Joint Use Pole
- Proposed Joint Use Pole
- Power Manhole — P
- Power Line Tower
- Power Transformer
- U/G Power Cable Hand Hole — HH
- H-Frame Pole
- Recorded U/G Power Line — P
- Designated U/G Power Line (S.U.E.*) — P

TELEPHONE:

- Existing Telephone Pole
- Proposed Telephone Pole
- Telephone Manhole — T
- Telephone Booth
- Telephone Pedestal — T
- Telephone Cell Tower
- U/G Telephone Cable Hand Hole — HH
- Recorded U/G Telephone Cable — T
- Designated U/G Telephone Cable (S.U.E.*) — T
- Recorded U/G Telephone Conduit — TC
- Designated U/G Telephone Conduit (S.U.E.*) — TC
- Recorded U/G Fiber Optics Cable — T FO
- Designated U/G Fiber Optics Cable (S.U.E.*) — T FO

WATER:

- Water Manhole — W
- Water Meter
- Water Valve
- Water Hydrant
- Recorded U/G Water Line — W
- Designated U/G Water Line (S.U.E.*) — W
- Above Ground Water Line — A/G Water

TV:

- TV Satellite Dish
- TV Pedestal — C
- TV Tower
- U/G TV Cable Hand Hole — HH
- Recorded U/G TV Cable — TV
- Designated U/G TV Cable (S.U.E.*) — TV
- Recorded U/G Fiber Optic Cable — TV FO
- Designated U/G Fiber Optic Cable (S.U.E.*) — TV FO

GAS:

- Gas Valve
- Gas Meter
- Recorded U/G Gas Line — G
- Designated U/G Gas Line (S.U.E.*) — G
- Above Ground Gas Line — A/G Gas

SANITARY SEWER:

- Sanitary Sewer Manhole
- Sanitary Sewer Cleanout
- U/G Sanitary Sewer Line — SS
- Above Ground Sanitary Sewer — A/G Sanitary Sewer
- Recorded SS Forced Moin Line — FSS
- Designated SS Forced Main Line (S.U.E.*) — FSS

MISCELLANEOUS:

- Utility Pole
- Utility Pole with Base
- Utility Located Object
- Utility Traffic Signal Box — TS
- Utility Unknown U/G Line — ? U/G
- U/G Tank; Water, Gas, Oil
- A/G Tank; Water, Gas, Oil
- U/G Test Hole (S.U.E.*)
- Abondoned According to Utility Records — AATUR
- End of Information — E.O.I.

PROJECT REFERENCE NO.	SHEET NO.
B-5218	2

STATE OF NORTH CAROLINA DEPT. OF TRANSPORTATION DIVISION OF HIGHWAYS RALEIGH, N.C.

ENGLISH DETAIL DRAWING FOR
BRIDGE APPROACH FILLS
CORED SLAB & BOX BEAM BRIDGES
SUB REGIONAL TIER

SHEET 1 OF 2
422D11

STATE OF NORTH CAROLINA DEPT. OF TRANSPORTATION DIVISION OF HIGHWAYS RALEIGH, N.C.

ENGLISH DETAIL DRAWING FOR
BRIDGE APPROACH FILLS
CORED SLAB & BOX BEAM BRIDGES
SUB REGIONAL TIER

SHEET 2 OF 2
422D11

PROJECT SERVICES UNIT
STANDARDS AND SPECIAL DESIGN
Office 919-250-4128 FAX 919-250-4119

BRIDGE APPROACH FILLS
CORED SLAB & BOX BEAM BRIDGES
SUB REGIONAL TIER

ORIGINAL BY: K. A. Kempf DATE: 6-10-08
MODIFIED BY: DATE:
CHECKED BY: DATE:
FILE SPEC.: kkempf\english\bridge approach fills.dgn

08-JUN-2009 14:15
s:\contracts\contracts\special details\erisward\stds\06' stds to special details\42211\bridge approach fill sub reg tier.dgn
jhowerton AT PS237501

05-NOV-2009 11:35
s:\contracts\contracts\special details\ericward\stds\06' stds to special details\300001\0300d01.dgn
jhowerton AT PS237501

5/14/99

STATE OF NORTH CAROLINA
DEPT. OF TRANSPORTATION
DIVISION OF HIGHWAYS
RALEIGH, N.C.

7-06

ENGLISH DETAIL DRAWING FOR
METHOD OF PIPE INSTALLATION
FLEXIBLE PIPE

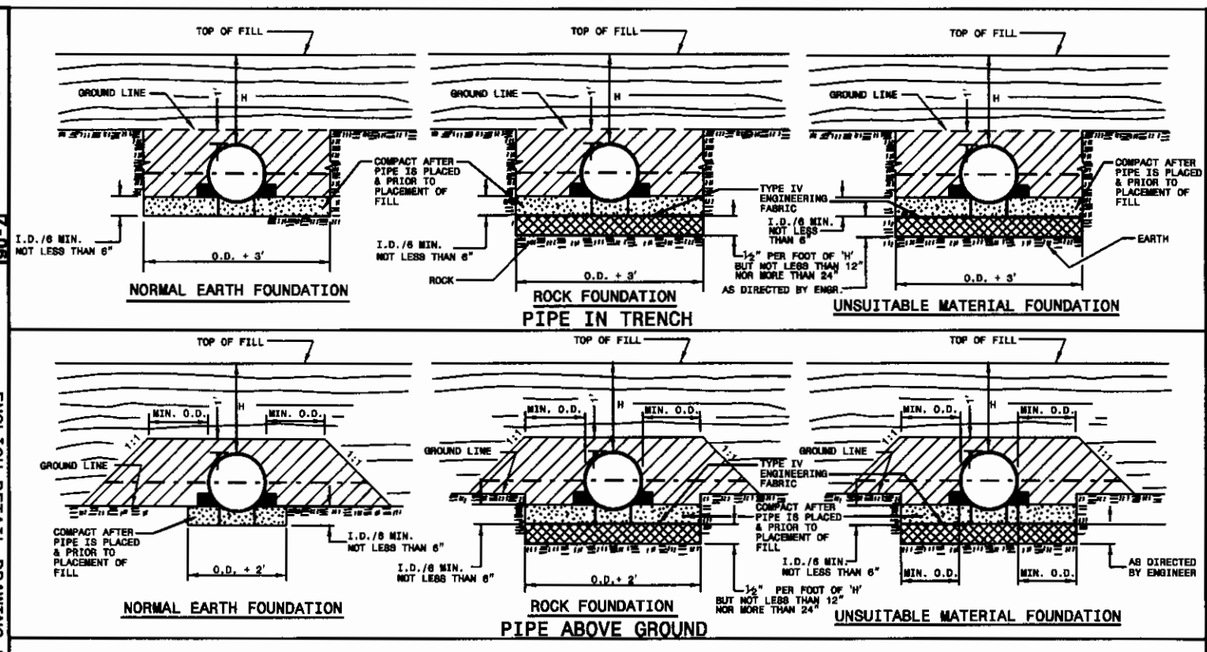

GENERAL NOTES:

I.D. = THE MAXIMUM HORIZONTAL INSIDE DIAMETER DIMENSION.

O.D. = THE MAXIMUM HORIZONTAL OUTSIDE DIAMETER DIMENSION.

H = THE FILL HEIGHT MEASURED VERTICALLY AT ANY POINT ALONG THE PIPE FROM THE TOP OF THE PIPE TO THE TOP OF THE EMBANKMENT AT THAT POINT.

TAKE CARE TO FULLY COMPACT HAUNCH ZONE OF PIPE BACKFILL.

LOOSELY PLACED SELECT MATERIAL CLASS III OR CLASS II, TYPE 1 FOR PIPE BEDDING. LEAVE SECTION DIRECTLY BENEATH PIPE UNCOMPACTED AS PIPE SEATING AND BACKFILL WILL ACCOMPLISH COMPACTION.

DO NOT OPERATE HEAVY EQUIPMENT OVER ANY PIPE CULVERT UNTIL THE PIPE CULVERT HAS BEEN PROPERLY BACKFILLED AND COVERED WITH AT LEAST 3 FEET OF APPROVED MATERIAL.

SPRINGLINE OF PIPE

SELECT BACKFILL MATERIAL CLASS III OR CLASS II, TYPE 1 ABOVE AND BELOW SPRINGLINE.

APPROVED SUITABLE LOCAL MATERIAL.

UNDISTURBED EARTH MATERIAL

SELECT MATERIAL CLASS V OR VI FOR FOUNDATION CONDITIONING. ENCAPSULATE WITH ENGINEERING FABRIC AS DIRECTED BY THE ENGINEER.

SHEET 1 OF 3
300D01

STATE OF NORTH CAROLINA
DEPT. OF TRANSPORTATION
DIVISION OF HIGHWAYS
RALEIGH, N.C.

7-06

ENGLISH DETAIL DRAWING FOR
METHOD OF PIPE INSTALLATION
RIGID PIPE

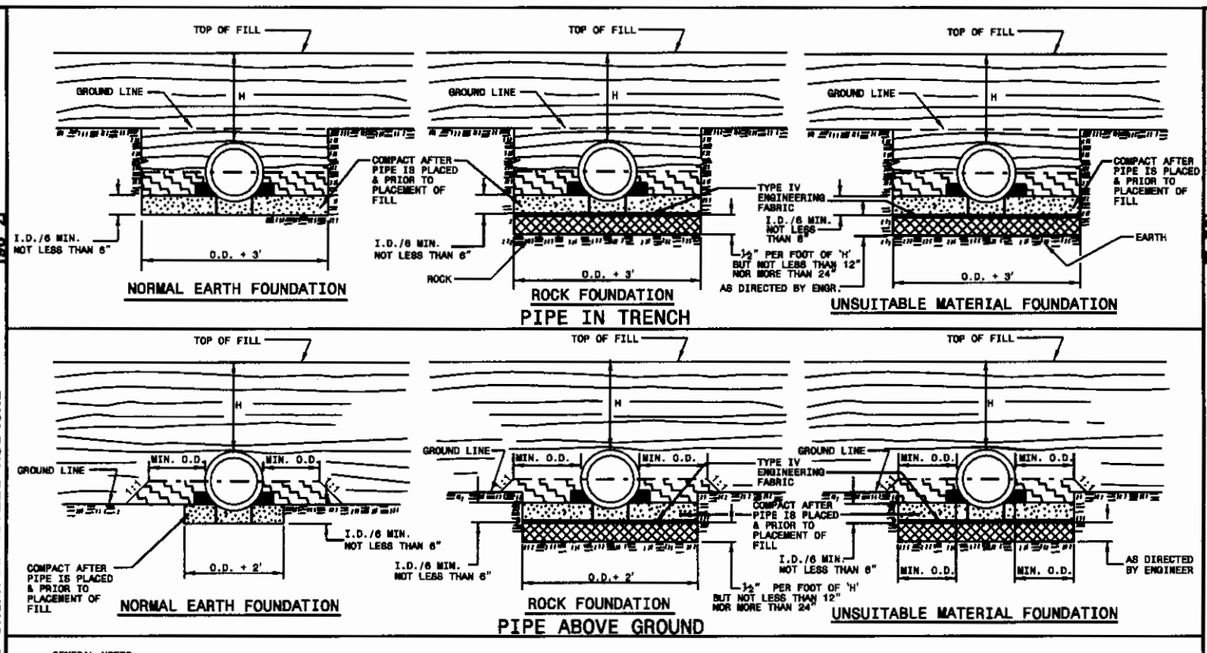

GENERAL NOTES:

I.D. = THE MAXIMUM HORIZONTAL INSIDE DIAMETER DIMENSION.

O.D. = THE MAXIMUM HORIZONTAL OUTSIDE DIAMETER DIMENSION.

H = THE FILL HEIGHT MEASURED VERTICALLY AT ANY POINT ALONG THE PIPE FROM THE TOP OF THE PIPE TO THE TOP OF THE EMBANKMENT AT THAT POINT.

TAKE CARE TO FULLY COMPACT HAUNCH ZONE OF PIPE BACKFILL.

LOOSELY PLACED SELECT MATERIAL CLASS III OR CLASS II, TYPE 1 FOR PIPE BEDDING. LEAVE SECTION DIRECTLY BENEATH PIPE UNCOMPACTED AS PIPE SEATING AND BACKFILL WILL ACCOMPLISH COMPACTION.

DO NOT OPERATE HEAVY EQUIPMENT OVER ANY PIPE CULVERT UNTIL THE PIPE CULVERT HAS BEEN PROPERLY BACKFILLED AND COVERED WITH AT LEAST 3 FEET OF APPROVED MATERIAL.

SPRINGLINE OF PIPE

SELECT BACKFILL MATERIAL CLASS III OR CLASS II, BELOW SPRINGLINE.

APPROVED SUITABLE LOCAL MATERIAL ABOVE SPRINGLINE.

UNDISTURBED EARTH MATERIAL

SELECT MATERIAL CLASS V OR VI FOR FOUNDATION CONDITIONING. ENCAPSULATE WITH ENGINEERING FABRIC AS DIRECTED BY THE ENGINEER.

SHEET 2 OF 3
300D01

PROJECT SERVICES UNIT
STANDARDS AND SPECIAL DESIGN
Office 919-250-4128 FAX 919-250-4119

ORIGINAL BY: KKempf DATE: 5-15-09
MODIFIED BY: DATE:
CHECKED BY: DATE:
FILE SPEC: s:\contracts\contracts\special details\ericward\stds\06' stds to special details\300001\0300d01.dgn

SEE PLATE FOR TITLE

PROJECT REFERENCE NO. B-5218
SHEET NO. 2-A

5/14/99

STATE OF NORTH CAROLINA
DEPT. OF TRANSPORTATION
DIVISION OF HIGHWAYS
RALEIGH, N.C.

7-06

ENGLISH DETAIL DRAWING FOR
METHOD OF PIPE INSTALLATION
FILL HEIGHT TABLES

SHEET 3 OF 3
300D01

FLEXIBLE PIPE

Round Corrugated Steel Pipe
2 2/3 x ½ corrugation **

Diameter (inches)	Minimum cover (inches)	Maximum Height of Cover (feet) (Ga) 16	14	12	10	8
12	12	204	256			
15	12	162	204			
18	12	135	169	239		
21	12	115	145	204		
24	12	100	128	178		
30	12	79	100	142		
36	12	65	83	117	152	
42	12	55	70	100	130	160
48	12	48	61	87	113	139
54	12		54	77	100	123
60	12			69	90	111
66	12				81	100
72	12				74	91
78	12					81
84	12					69

Round Corrugated Aluminum Pipe
2 2/3 x ½ corrugation **

Diameter (inches)	Minimum cover (inches)	Maximum Height of Cover (feet) (Ga) 16	14	12	10	8
12	12	123	155	218	281	344
15	12	98	123	174	224	275
18	12	81	102	144	187	228
21	12	69	87	123	160	195
24	12	60	78	108	139	171
27	12		67	95	123	151
30	12		60	85	111	136
36	12		50	71	92	113
42	12			60	78	96
48	12			52	68	84
54	12			46	50	74
60	12				50	62
66	12					51
72	12					41

** FOR DIFFERENT CORRUGATIONS AND ARCH PIPES REFER TO ROADWAY DESIGN MANUAL OR MANUFACTURERS SPECIFICATION.

HDPE - * (Minimum fill) 2' for pipe diameters ≥ 12" and ≤ 60"
* (Maximum fill) 20' for pipe diameters ≤ 24"
17' for pipe diameters ≥ 30" and ≤ 60"

PVC - * (Minimum fill) 2' for pipe diameters ≥ 12" and ≤ 36"
* (Maximum fill) 30' for pipe diameters ≥ 12" and ≤ 36"

* FILL HEIGHT IS MEASURED FROM THE TOP OF THE PIPE TO THE BOTTOM OF THE PAVEMENT STRUCTURE

REFER TO THE FOLLOWING FOR PIPE SPECIFICATIONS

CSP - AASHTO M36
CAAP - AASHTO M196
HDPE - AASHTO M294
PVC - ASTM F949 or AASHTO M304

NOTES: FILL HEIGHTS SHOWN WERE CALCULATED USING AASHTO LRFD BRIDGE DESIGN SPECIFICATIONS

1' MINIMUM COVER FOR ALL SIDE DRAIN PIPE IN ACCORDANCE WITH THE STANDARD SPECIFICATIONS

RIGID PIPE

RCP - * (Minimum fill) 1' for Class IV & CLASS V
2' for Class III & Class II

* (Maximum fill) 10' - Class II pipe
20' - Class III pipe
30' - Class IV pipe
40' - Class V pipe

(For fills > 40' & < 80' use LRFD Direct Design Method)

* FILL HEIGHT IS MEASURED FROM THE TOP OF THE PIPE TO THE BOTTOM OF THE PAVEMENT STRUCTURE

REFER TO THE FOLLOWING FOR PIPE SPECIFICATIONS

RCP - AASHTO M170

NOTES: FILL HEIGHTS SHOWN WERE CALCULATED USING AASHTO LRFD BRIDGE DESIGN SPECIFICATIONS

1' MINIMUM COVER FOR ALL SIDE DRAIN PIPE IN ACCORDANCE WITH THE STANDARD SPECIFICATIONS

STATE OF NORTH CAROLINA
DEPT. OF TRANSPORTATION
DIVISION OF HIGHWAYS
RALEIGH, N.C.

7-06

ENGLISH DETAIL DRAWING FOR
METHOD OF PIPE INSTALLATION
FILL HEIGHT TABLES

SHEET 3 OF 3
300D01

PROJECT SERVICES UNIT
STANDARDS AND SPECIAL DESIGN
Office 919-250-4128 FAX 919-250-4119

SEE PLATE FOR TITLE

ORIGINAL BY: KGaspr DATE: 8-15-02
MODIFIED BY: DATE:
CHECKED BY: DATE:
FILE SPEC: s:\contracts\contracts\special details\ericward\stds\06' stds to special details\30001\0300d01.dgn

PROJECT REFERENCE NO. B-5218
SHEET NO. 7-B

COMPUTED BY: GSP	DATE: 01-12-2011
CHECKED BY:	DATE:

STATE OF NORTH CAROLINA
DIVISION OF HIGHWAYS

PROJECT REFERENCE NO.	SHEET NO.
B-5218	3

SUMMARY OF EARTHWORK

STATION	STATION	UNCL. EXCAV.	EMBANK. +%	BORROW	WASTE
-L- 10+05.00	-L- 12+37.71	1	1051	1050	
SUBTOTALS:		1	1051	1050	
-L- 15+00.37	-L- 17+50.00	0	790	790	
SUBTOTALS:		0	790	790	
PROJECT TOTALS:		1	1841	1840	
5% TO REPLACE TOPSOIL ON BORROW PIT				92	
GRAND TOTALS:		1		1932	
SAY		25		2000	

NOTE: APPROXIMATE QUANTITIES ONLY. UNCLASSIFIED EXCAVATION, BORROW EXCAVATION, SHOULDER BORROW, FINE GRADING, CLEARING & GRUBBING, BREAKING OF EXISTING PAVEMENT, AND REMOVAL OF EXISTING PAVEMENT WILL TO BE PAID FOR AT THE CONTRACT LUMP SUM PRICE FOR "GRADING".

PAVEMENT REMOVAL SUMMARY

SURVEY LINE	STATION	STATION	LOCATION LT/RT/CL	YD²
-L-	10+55.00	EX. BRIDGE	CL	462
-L-	EX. BRIDGE	17+00.00	CL	479
			TOTAL:	941
			SAY:	950

LIST OF PIPES, ENDWALLS, ETC. (FOR PIPES 48" & UNDER)

STATION	LOCATION (LT, RT, OR CL)	STRUCTURE NO. FROM	STRUCTURE NO. TO	TOP ELEVATION	INVERT ELEVATION	INVERT ELEVATION	SLOPE CRITICAL	DRAINAGE PIPE (RCP, CSP, CAAP, HDPE or PVC) 12"	15"	18"	24"	30"	36"	42"	48"	DO NOT USE RCP	DO NOT USE CSP	DO NOT USE CAAP	DO NOT USE HDPE
12+19.00	RT	1		207.8															
12+12.84	LT	2		207.8															
12+16.00	RT	1	2		205.1	202.8			32										
12+12.84	LT	2	3		202.8	197.5			24										
PROJECT TOTAL									66										

STATION	C. S. PIPE 12" .064	15" .064	18" .064	24" .064	30" .079	36" .079	42" .109	48" .109	R. C. PIPE CLASS III 12"	15"	18"	24"	30"	36"	42"	48"	R. C. PIPE CLASS IV 12"	15"	18"	24"	30"	36"	42"	48"
12+19.00																								
12+12.84																								
12+16.00																								
12+12.84																								
PROJECT TOTAL																								

STATION	*** RC PIPE, (CLASS V)	**** RC PIPE CULVERTS, CONTRACTOR DESIGN	**** RC PIPE CULVERTS, CONTRACTOR DESIGN	15" SIDE DRAIN PIPE	18" SIDE DRAIN PIPE	ENDWALLS STD. 838.01, STD. 838.11 OR STD. 838.80 (UNLESS NOTED OTHERWISE) CU. YDS. R.C.P.	C.S.P.	QUANTITIES FOR DRAINAGE STRUCTURES PER EACH (0' THRU 5.0')	* TOTAL L.F. FOR PAY QUANTITY SHALL BE COL 'A' + (1.3 X COL 'B') LIN. *FT. A 5.0' THRU 10.0'	B 10.0' AND ABOVE	C.B. STD. 840.01 OR STD. 840.02	FRAME, GRATES AND HOOD STANDARD 840.03 TYPE OF GRATE E	F	G		T.B.D.I. STD. 840.35		G.D.I. (N.S.) FRAME WITH GRATE STD. 840.29		CORR. STEEL ELBOWS NO. & SIZE	CONC. COLLARS CL "B" C.Y. STD 840.72	CONC. & BRICK PIPE PLUG, C.Y. STD. 840.71	PIPE REMOVAL LIN.FT.	REMARKS
12+19.00								1								1		1						
12+12.84								1								1		1						
12+16.00																								
12+12.84																								
PROJECT TOTAL								2								2		2						

ABBREVIATIONS

C.B.	CATCH BASIN
N.D.I.	NARROW DROP INLET
D.I.	DROP INLET
G.D.I.	GRATED DROP INLET
G.D.I. (N.S.)	GRATED DROP INLET (NARROW SLOT)
J.B.	JUNCTION BOX
M.H.	MANHOLE
T.B.D.I.	TRAFFIC BEARING DROP INLET
T.B.J.B.	TRAFFIC BEARING JUNCTION BOX

"N" = DISTANCE FROM EDGE OF LANE TO FACE OF GUARDRAIL.
TOTAL SHOULDER WIDTH = DISTANCE FROM EDGE OF TRAVEL LANE TO SHOULDER BREAK POINT.
FLARE LENGTH = DISTANCE FROM LAST SECTION OF PARALLEL GUARDRAIL TO END OF GUARDRAIL.
W = TOTAL WIDTH OF FLARE FROM BEGINNING OF TAPER TO END OF GUARDRAIL.
G = GATING IMPACT ATTENUATOR TYPE 350
NG = NON-GATING IMPACT ATTENUATOR TYPE 350

GUARDRAIL SUMMARY

SURVEY LINE	BEG. STA.	END STA.	LOCATION	LENGTH STRAIGHT	SHOP CURVED	DOUBLE FACED	WARRANT POINT APPROACH END	TRAILING END	"N" DIST. FROM E.O.L.	TOTAL SHOUL. WIDTH	FLARE LENGTH APPROACH END	TRAILING END	W APPROACH END	TRAILING END
-L-	11+65.34	12+35.08	RT	75			12+35.08		4.92	6.92	50		1	
-L-	11+60.08	12+40.34	LT	75				12+40.37	4.92	6.92		50		1
-L-	15+03.00	15+78.00	RT	75				15+03.00	4.92	6.92		50		1
-L-	14+97.74	15+72.74	LT	75			10+75.25		4.92	6.92	50		1	
			PROJECT SUBTOTAL	300										
			LESS ANCHORS	(-) 275										
			PROJECT TOTAL	25										
			SAY	25			ADDITIONAL GUARDRAIL POSTS = 5 EA.		(NOTE: EXTRA LONG GUARDRAIL POSTS ARE TO BE UTILIZED.)					

SURVEY LINE	ANCHORS XI MOD	XI	GRAU 350	M-350	B-77	CAT-1	VI MOD	BIC	AT-1	IMPACT ATTENUATOR TYPE 350 EA	G	NG	SINGLE FACED GUARDRAIL	REMOVE EXISTING GUARDRAIL	REMOVE AND STOCKPILE EXISTING GUARDRAIL	REMARKS
-L-			1		1											
-L-			1		1											
-L-			1		1											
-L-			1		1											
PROJECT SUBTOTAL			4		4	ANCHOR DEDUCTIONS										
LESS ANCHORS						B-77 = 4 @ 18.75 =			75.00							
						GRAU 350 = 4 @ 50.00 =			200.00							
								=	275.00							

PROJECT REFERENCE NO.	SHEET NO.
B-5218	4
R/W SHEET NO.	

ROADWAY DESIGN ENGINEER: NORTH CAROLINA PROFESSIONAL SEAL 022999 ENGINEER, GREG J. PIRYTS — 5/24/11

HYDRAULICS ENGINEER: NORTH CAROLINA PROFESSIONAL SEAL 19496 ENGINEER, JAMES C. DAVIS — 5/24/11

ETHERILL ENGINEERING
509 Jones Franklin Rd. Suite 164
Raleigh, N.C. 27606
License No. F-0377
Ph: 919 851 8077
Fax: 919 851 8107

TRANSPORTATION PLANNING/DESIGN - BRIDGE/STRUCTURE DESIGN
CIVIL/SITE DESIGN - GIS/GPS - CONSTRUCTION OBSERVATION

SHOULDER BERM GUTTER SUMMARY

SURVEY LINE	STATION	STATION	LENGTH
-L- LT	13+69	12+34	16
-L- RT	12+14	12+29	15
		TOTAL	30
		SAY	30

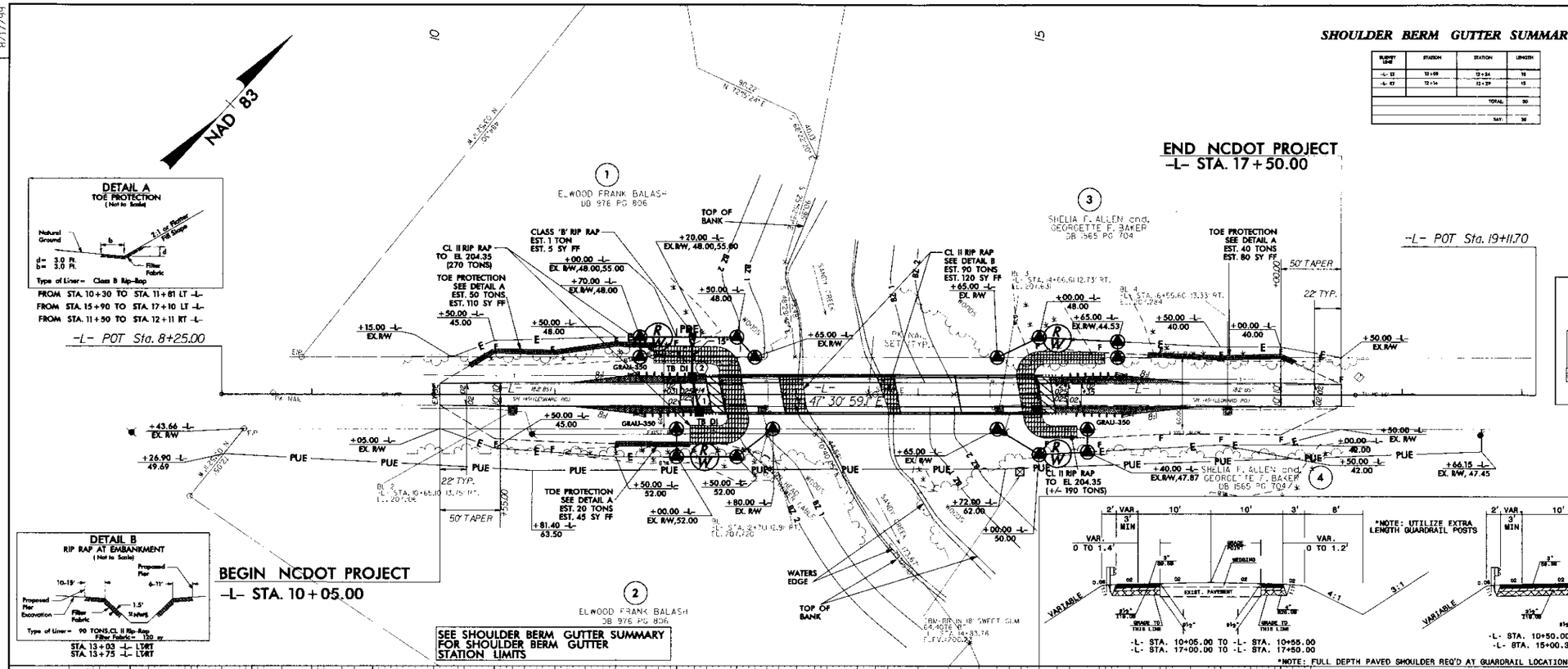

STRUCTURE HYDRAULIC DATA

DESIGN DISCHARGE	= 9300	CFS
DESIGN FREQUENCY	= 25	YRS
DESIGN HW ELEVATION	= 203.4	FT
BASE DISCHARGE	= 13200	CFS
BASE FREQUENCY	= 100	YRS
BASE HW ELEVATION	= 205.4	FT
OVERTOPPING DISCHARGE	= 19000	CFS
OVERTOPPING FREQUENCY	= +/-500	YRS
OVERTOPPING ELEVATION	= 207.7	FT

NOTES:

1). ONLY ONE IN-STREAM CAUSEWAY WILL BE CONSTRUCTED AT A TIME.

2). THE CONTRACTOR MAY REMOVE THE CONCRETE PILES AND SPREAD FOOTER BY ONE OF THE FOLLOWING NCDOT BEST MANAGEMENT PRACTICES:

* ATTEMPT TO ROCK OR SHAKE THE CONCRETE PILES AND SPREAD FOOTER FOR REMOVAL. THIS WILL LIKELY CAUSE SOME AMOUNT OF SHATTERING. THIS MATERIAL WILL THEN BE BROKEN INTO SMALLER PIECES BY A HOE RAM OR EXCAVATOR BUCKET AND REMOVED AS PRACTICAL.

* CUT THE CONCRETE PILES AND SPREAD FOOTER FOR REMOVAL. THE REMAINING PORTIONS WILL THEN BE BROKEN INTO SMALLER PIECES BY A HOE RAM OR EXCAVATOR BUCKET AND REMOVED AS PRACTICAL.

* IN EITHER METHOD, THE CONTRACTOR MUST ATTEMPT TO REMOVE ALL OF THE CONCRETE SPREADER FOOTER. IF THE ENGINEER DETERMINES THAT THIS NOT PRACTICAL, IT WILL BE REMOVED TO DEPTH OF ONE FOOT BELOW THE NATURAL STREAMBED.

3). RIP RAP WILL BE INSTALLED AS TOE PROTECTION IN AREAS WHERE THE FILL SLOPE EXTENDS INTO WETLAND AREAS. THIS RIP RAP MUST BE INSTALLED IMMEDIATELY AFTER ESTABLISHMENT OF FILL SLOPE.

STATE OF NORTH CAROLINA
DEPARTMENT OF TRANSPORTATION
RALEIGH

TIP. NO. B-5218
FRANKLIN COUNTY
STATION: 13+69.04 -L-
REPLACES BRIDGE: NO. 61

REVISIONS						SHEET NO.
NO.	BY:	DATE:	NO.	BY:	DATE:	TOTAL SHEETS
1			3			7
2			4			

REVISIONS

8/17/99

8:45:27 AM
BY:41000/MN0020481\Roadway\Proj\Franklin61_Rpt.psh.dgn
5/24/2011

PROJECT REFERENCE NO.	SHEET NO.
B-5218	EC-1(CONST.4)
R/W SHEET NO.	

Level III-A EC Certified by:
James Davis
Certification Number: 633

ETHERILL ENGINEERING
539 James Franklin Rd. Suite 164
Raleigh, N.C. 27606
Licence No. F-0377
Tel: 919 851 8077
Fax: 919 851 8107
TRANSPORTATION PLANNING/DESIGN - BRIDGE/STRUCTURE DESIGN
CIVIL/SITE DESIGN - GIS/GPS - CONSTRUCTION OBSERVATION

NAD 83

CONSTRUCTION SEQUENCE

1. ACCESS AND MOBILIZATION: STABILIZE BARE AREAS IMMEDIATELY WITH TEMPORARY VEGETATION AND/OR GRAVEL AS CONSTRUCTION TAKES PLACE.
2. INSTALL SILT FENCE AND SPECIAL SEDIMENT CONTROL FENCE. SILT FENCE SHALL BE INSTALLED UP TO THE EXISTING BRIDGE ABUTMENTS TO PREVENT SEDIMENT-LADEN RUNOFF FROM LEAVING THE CONSTRUCTION SITE. SILT FENCE SHALL BE INSTALLED AT THE PERIMETER OF DISTURBED AREAS.
3. PROCEED WITH CONSTRUCTION OF THE NEW BRIDGE. ADDITIONAL GRAVEL STABILIZATION OR SILT FENCE MAY BE REQUIRED BEHIND THE OLD ABUTMENTS WHEN THE OLD BRIDGE IS REMOVED AND BEFORE THE NEW BRIDGE IS INSTALLED.
4. MAINTENANCE INSPECTIONS SHALL BE PERFORMED WEEKLY AND AFTER PERIODS OF RAINFALL. REPAIRS SHALL BE MADE IMMEDIATELY.
5. ONCE THE SITE IS STABILIZED, REMOVE ALL EROSION CONTROL DEVICES.

Place Matting for Erosion Control on Slope as Work Allows.

END NCDOT PROJECT
-L- STA. 17+50.00

DETAIL A
TOE PROTECTION
(Not to Scale)

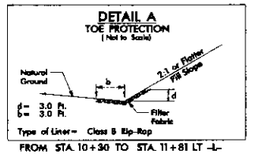

FROM STA. 10+30 TO STA. 11+81 LT -L-
FROM STA. 15+90 TO STA. 17+10 LT -L-
FROM STA. 11+50 TO STA. 12+11 RT -L-

QUANTITIES:

Temporary Silt Fence	1300 LF
Sediment Control Stone	70 TNS
Erosion Control Stone, Class B	5 TN
Filter Fabric	800 SY
¼" Hardware Cloth	340 LF
Floating Turbidity Curtain	80 SY
Rip Rap, Class II	650 TN
Matting for Erosion Control	1550 SY

DETAIL B
RIP RAP AT EMBANKMENT
(Not to Scale)

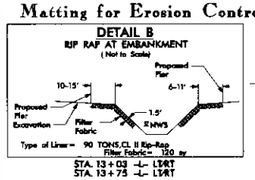

STA. 13+03 -L- LT&RT
STA. 13+73 -L- LT&RT

BEGIN NCDOT PROJECT
-L- STA. 10+05.00

ENVIRONMENTALLY SENSITIVE AREA
SEE PROJECT SPECIAL PROVISIONS

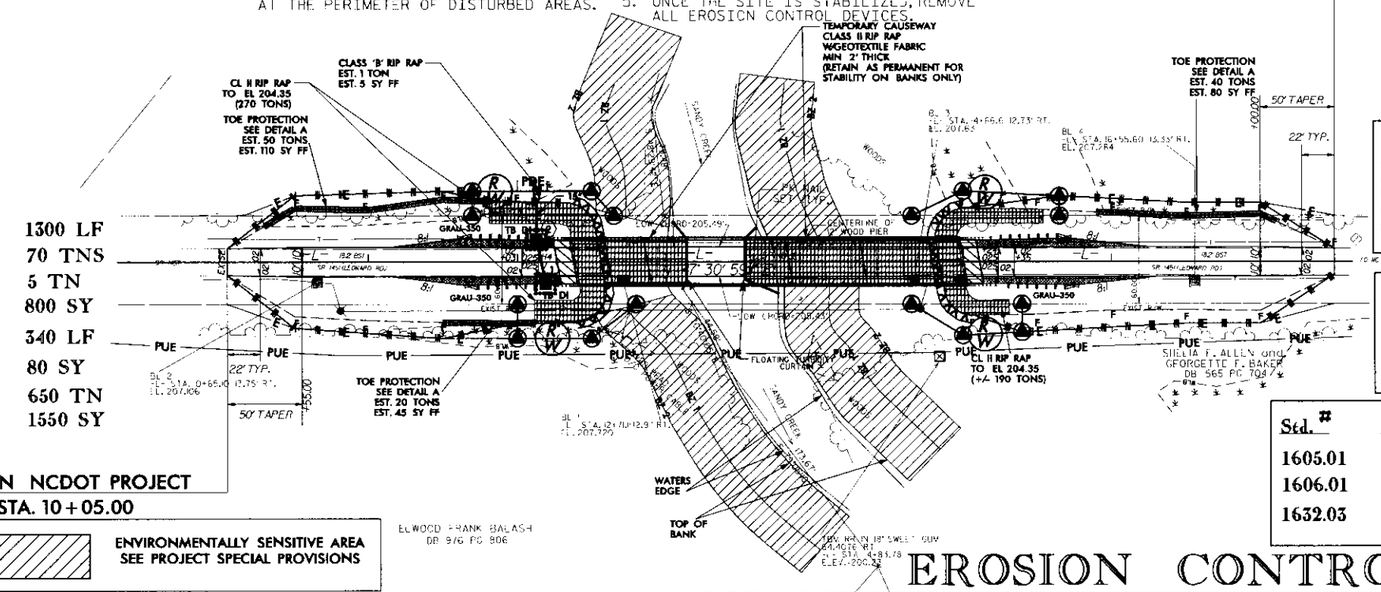

EROSION CONTROL PLANS

Roadway Standard Drawings

The following roadway english standards as appear in "Roadway Standard Drawings"- Roadway Design Unit - N. C. Department of Transportation - Raleigh, N. C., dated July 18, 2006 and the latest revison thereto are applicable to this project and by reference hereby are considered a part of these plans.

1605.01	Temporary Silt Fence	1632.03	Rock Inlet Sediment Trap Type C
1606.01	Special Sediment Control Fence	1633.02	Temporary Rock Silt Check Type B
1630.02	Silt Basin Type B		

NOTES: ANY DEVIATION FROM OPTIONS GIVEN WILL REQUIRE PRIOR APPROVAL BY ENGINEER.

ADDITIONAL EROSION CONTROL DEVICES MAY NEED TO BE INSTALLED AS DIRECTED BY THE ENGINEER.

Std. #	Description	Symbol
1605.01	Temporary Silt Fence	
1606.01	Special Sediment Control Fence	
1632.03	Rock Inlet Sediment Trap Type C	

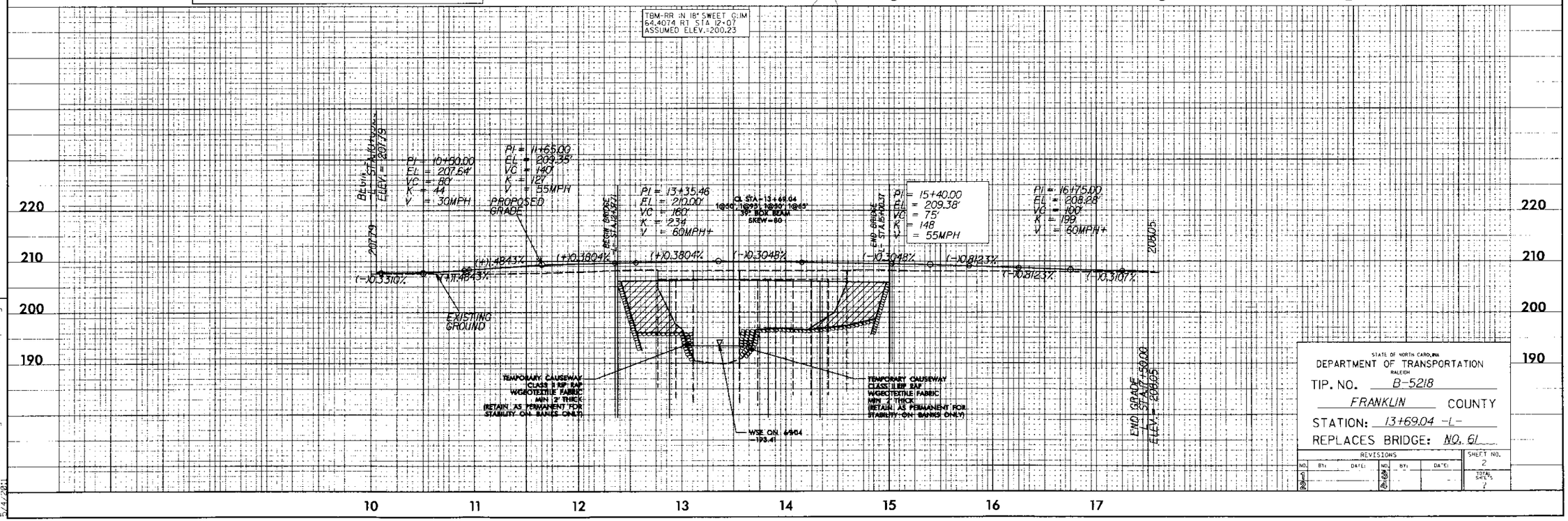

STATE OF NORTH CAROLINA
DEPARTMENT OF TRANSPORTATION
RALEIGH

TIP. NO. B-5218
FRANKLIN COUNTY
STATION: 13+69.04 -L-
REPLACES BRIDGE: NO. 61

REVISIONS								SHEET NO.
NO.	BY:	DATE:	NO.	BY:	DATE:			2
								TOTAL SHEETS
								7

REVISIONS

8/17/99

3/20/13 PM
C:\Users\WADsbm048\hydro\Franklin\61_ec_psh.dgn
8/14/2006

PROJECT REFERENCE NO.	SHEET NO.
B-5218	EC-2
R/W SHEET NO.	

MATTING INSTALLATION DETAIL

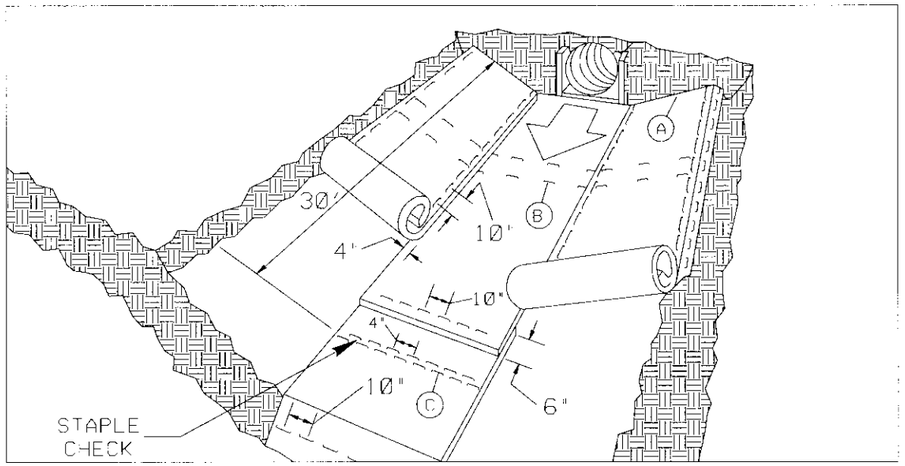

MATTING IN DITCHES

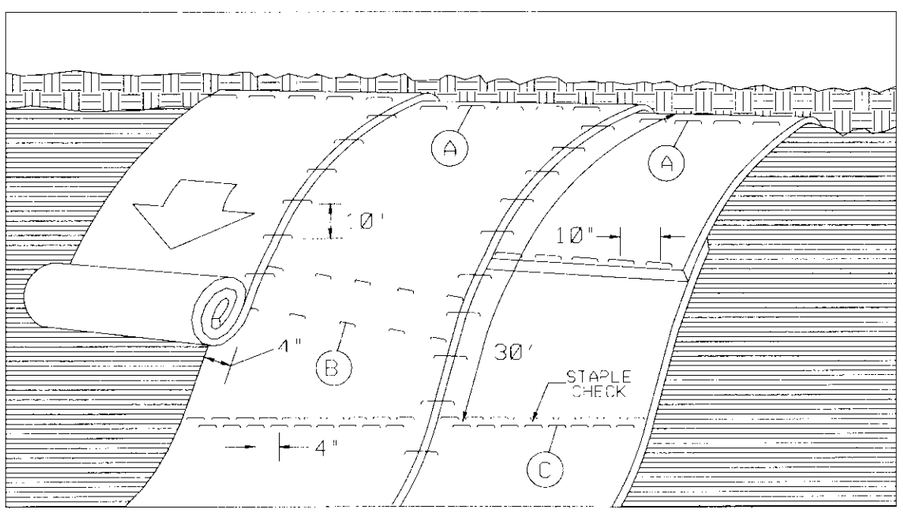

MATTING ON SLOPES

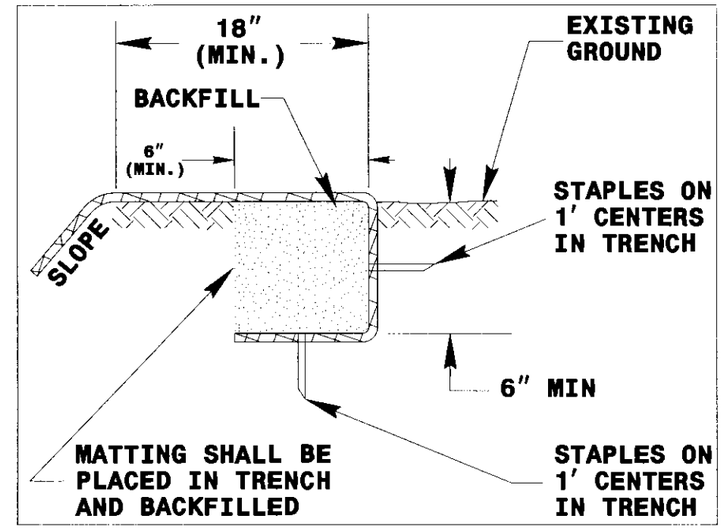

DIAGRAM (A)

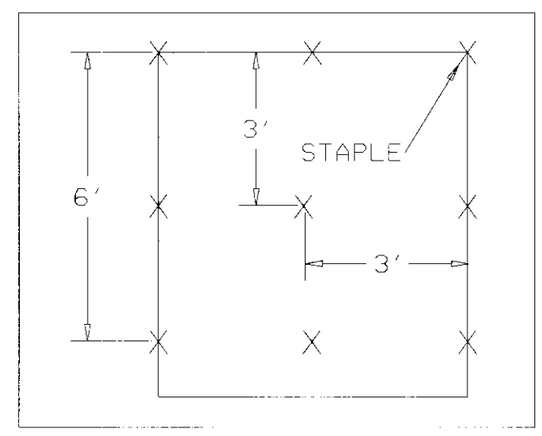

DIAGRAM (B)

STAPLE CHECK PATTERN

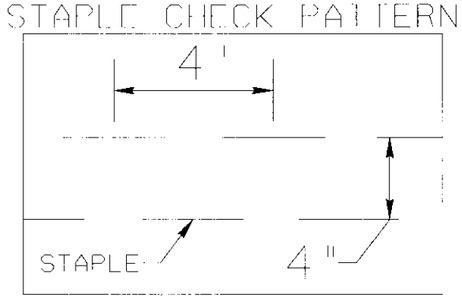

DIAGRAM (C)

NOTES:

THIS DETAIL APPLIES TO STRAW, EXCELSIOR, AND PERMANENT SOIL REINFORCEMENT MAT (PSRM) INSTALLATION.

STAPLES SHALL BE NO. 11 GAUGE STEEL WIRE FORMED INTO A "U" SHAPE WITH A MINIMUM THROAT WIDTH OF 1 INCH AND NOT LESS THAN 6 INCHES IN LENGTH.

NOT TO SCALE

PROJECT REFERENCE NO.	SHEET NO.
B-5218	EC-3
R/W SHEET NO.	

PLANTING DETAILS

SEEDLING / LINER BAREROOT PLANTING DETAIL

HEALING IN

1. Locate a healing-in site in a shady, well protected area.
2. Excavate a flat bottom trench 12 inches deep and provide drainage.

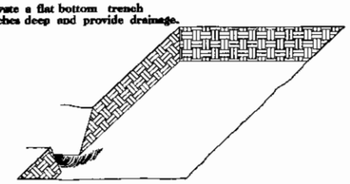

3. Backfill the trench with 2 inches well rotted sawdust. Place a 2 inch layer of well rotted sawdust at a sloping angle at one end of the trench.

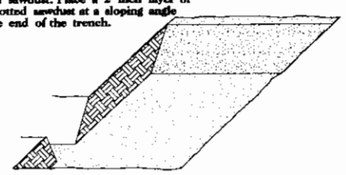

4. Place a single layer of plants against the sloping and so that the root collar is at ground level.

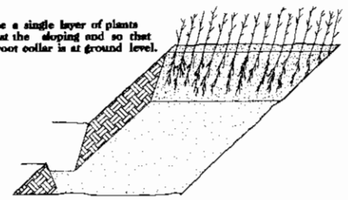

5. Place a 2 inch layer of well rotted sawdust over the roots maintaining a sloping angle.

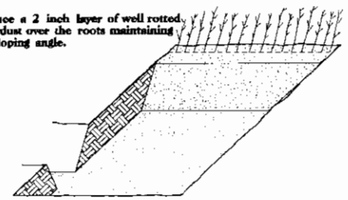

6. Repeat layers of plants and sawdust as necessary and water thoroughly.

DIBBLE PLANTING METHOD
USING THE KBC PLANTING BAR

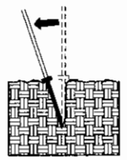

1. Insert planting bar as shown and pull handle toward planter.

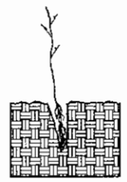

2. Remove planting bar and place seedling at correct depth.

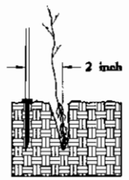

3. Insert planting bar 2 inches toward planter from seedling.

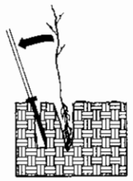

4. Pull handle of bar toward planter, firming soil at bottom.

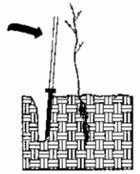

5. Push handle forward firming soil at top.

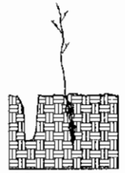

6. Leave compaction hole open. Water thoroughly.

PLANTING NOTES:

PLANTING BAG
During planting, seedlings shall be kept in a moist canvas bag or similar container to prevent the root systems from drying.

KBC PLANTING BAR
Planting bar shall have a blade with a triangular cross section, and shall be 12 inches long, 4 inches wide and 1 inch thick at center.

ROOT PRUNING
All seedlings shall be root pruned, if necessary, so that no roots extend more than 10 inches below the root collar.

REFORESTATION

☐ TREE REFORESTATION SHALL BE PLANTED 6 FT. TO 10 FT. ON CENTER, RANDOM SPACING, AVERAGING 8 FT. ON CENTER, APPROXIMATELY 680 PLANTS PER ACRE.

REFORESTATION

MIXTURE, TYPE, SIZE, AND FURNISH SHALL CONFORM TO THE FOLLOWING:

25%	LIRIODENDRON TULIPIFERA	TULIP POPLAR	12 in - 18 in BR
25%	PLATANUS OCCIDENTALIS	SYCAMORE	12 in - 18 in BR
25%	FRAXINUS PENNSYLVANICA	GREEN ASH	12 in - 18 in BR
25%	BETULA NIGRA	RIVER BIRCH	12 in - 18 in BR

NOT TO SCALE

REFORESTATION DETAIL SHEET

N.C.D.O.T. - ROADSIDE ENVIRONMENTAL UNIT

PROJ. REFERENCE NO.	SHEET NO.
B-5218	X-1

STATE OF NORTH CAROLINA
DIVISION OF HIGHWAYS

NOTE: EMBANKMENT COLUMN DOES NOT INCLUDE BACKFILL FOR UNDERCUT

CROSS-SECTION SUMMARY

Station L	Uncl. Exc. (cu. yd.)	Embt (cu. yd.)
10+50.00	0	43
11+00.00	0	97
11+50.00	0	216
11+00.00	0	368

Station L	Uncl. Exc. (cu. yd.)	Embt (cu. yd.)
15+50.00	0	262
16+00.00	0	200
16+50.00	0	114
17+00.00	1	56
17+50.00	1	26

Approximate quantities only. Unclassified excavation, borrow excavation, fine grading, clearing and grubbing, and removal of existing pavement will be paid for at the lump sum price for "Grading".

8/23/99

0 5 10	PROJ. REFERENCE NO.	SHEET NO.
	B-5218	X-2

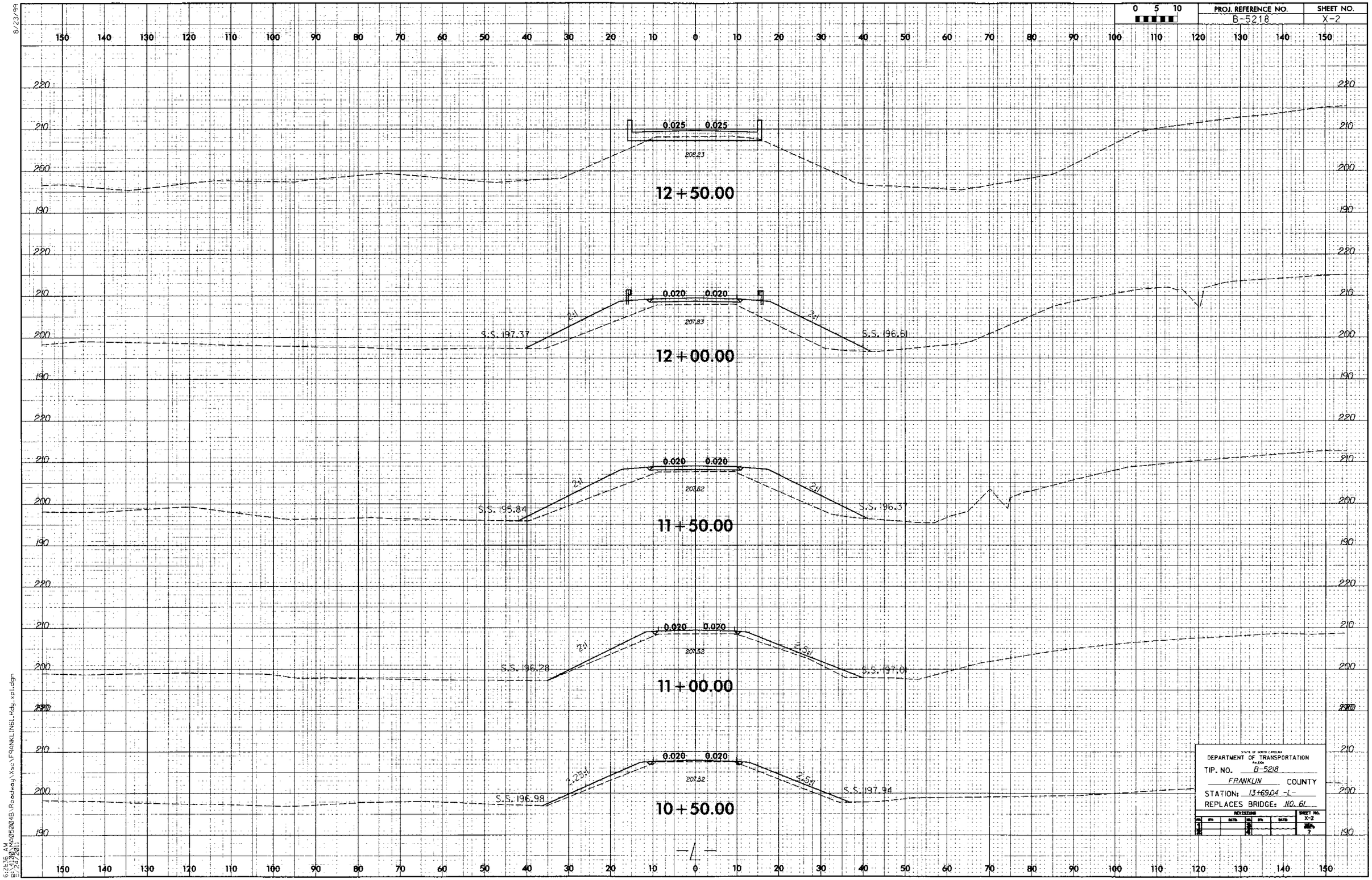

STATE OF NORTH CAROLINA
DEPARTMENT OF TRANSPORTATION
RALEIGH

TIP. NO. B-5218

FRANKLIN COUNTY

STATION: 13+69.04 -L-

REPLACES BRIDGE: NO. 61

REVISIONS								SHEET NO.
NO.	BY:	DATE:	NO.	BY:	DATE:			X-2
1			3					TOTAL SHTS.
2			4					2

6:24:36 AM
8/23/99
MA05B01B\Roadway\Xsc\FRANKLIN6L.Rdy_xpl.dgn

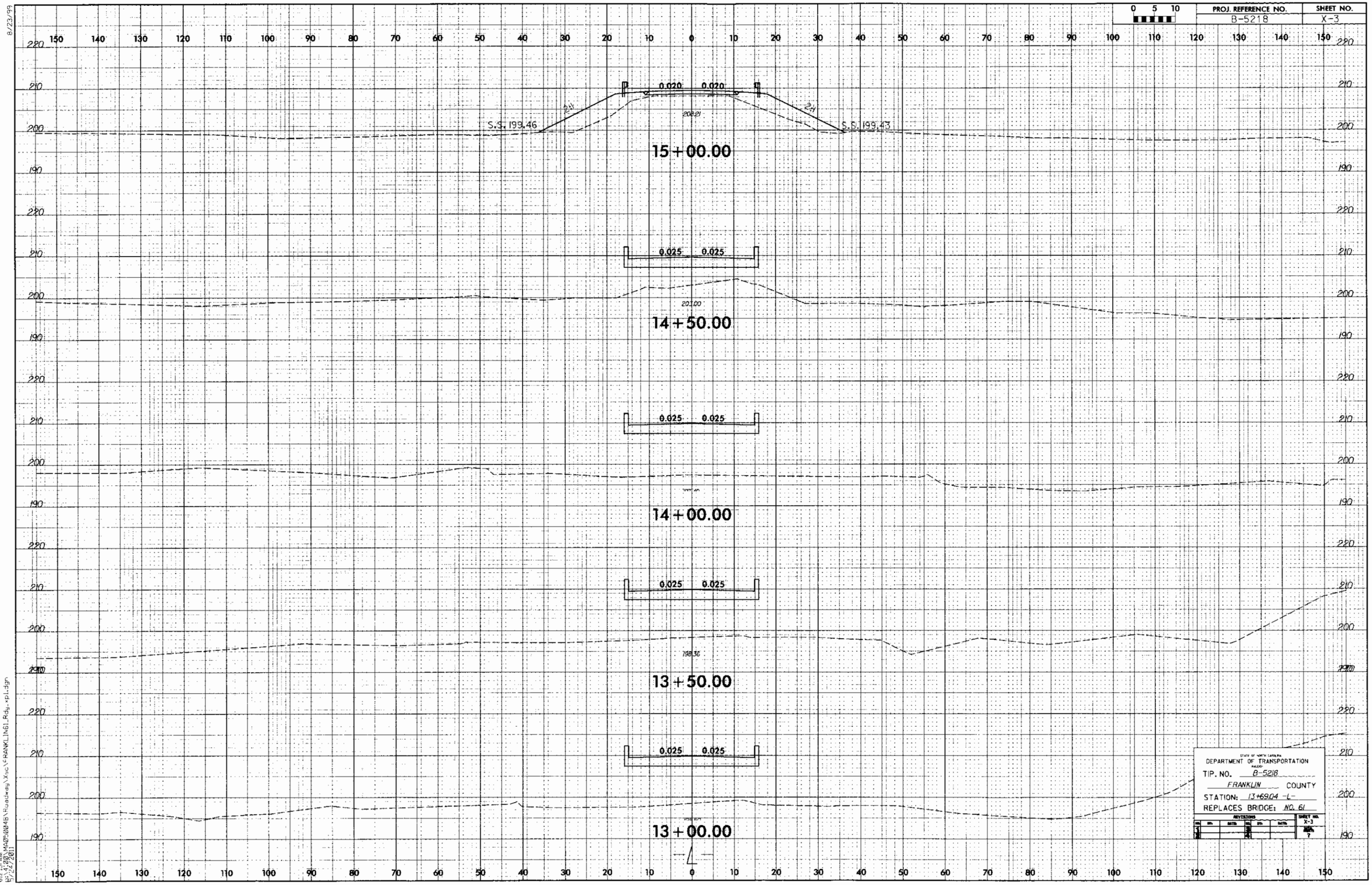
PROJ. REFERENCE NO.
B-5218
SHEET NO.
X-3
0 5 10
S.S. 199.46
S.S. 199.43
0.020 0.020
2:1
2:1
208.21
15+00.00
0.025 0.025
203.00
14+50.00
0.025 0.025
14+00.00
0.025 0.025
198.36
13+50.00
0.025 0.025
13+00.00
DEPARTMENT OF TRANSPORTATION
TIP. NO. B-5218
FRANKLIN COUNTY
STATION: 13+69.04 -L-
REPLACES BRIDGE: NO. 61
REVISIONS
SHEET NO.
X-3
TOTAL SHEETS
?

6/23/99

0 5 10	PROJ. REFERENCE NO.	SHEET NO.
	B-5218	X-4

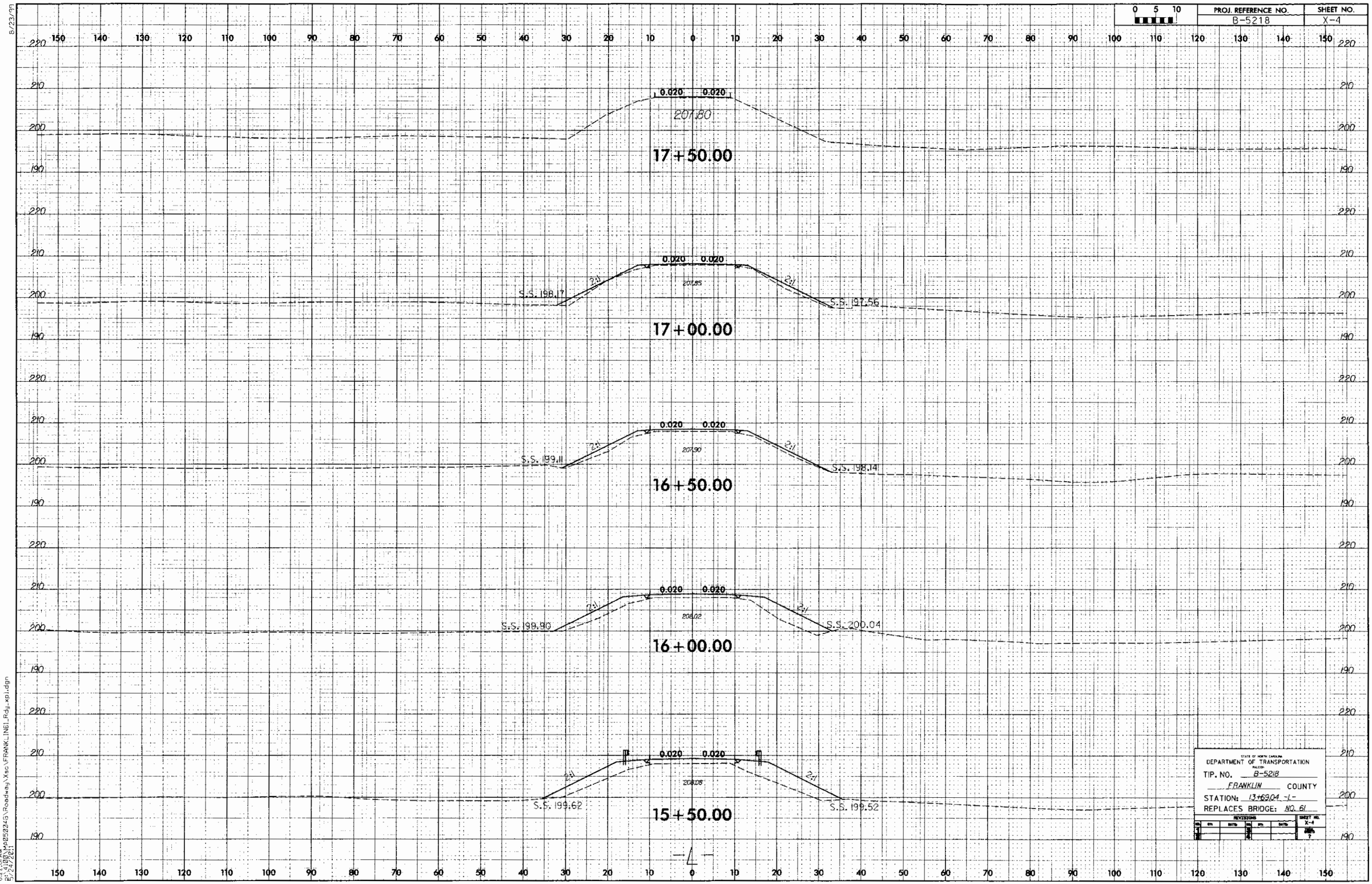

6:20:01 AM
P:\100\P05824G\Roadway\Xsc\FRANK_INEI_Rdy_xpl.dgn
5/24/2011

TIP PROJECT # B-5218

#61 FRANKLIN

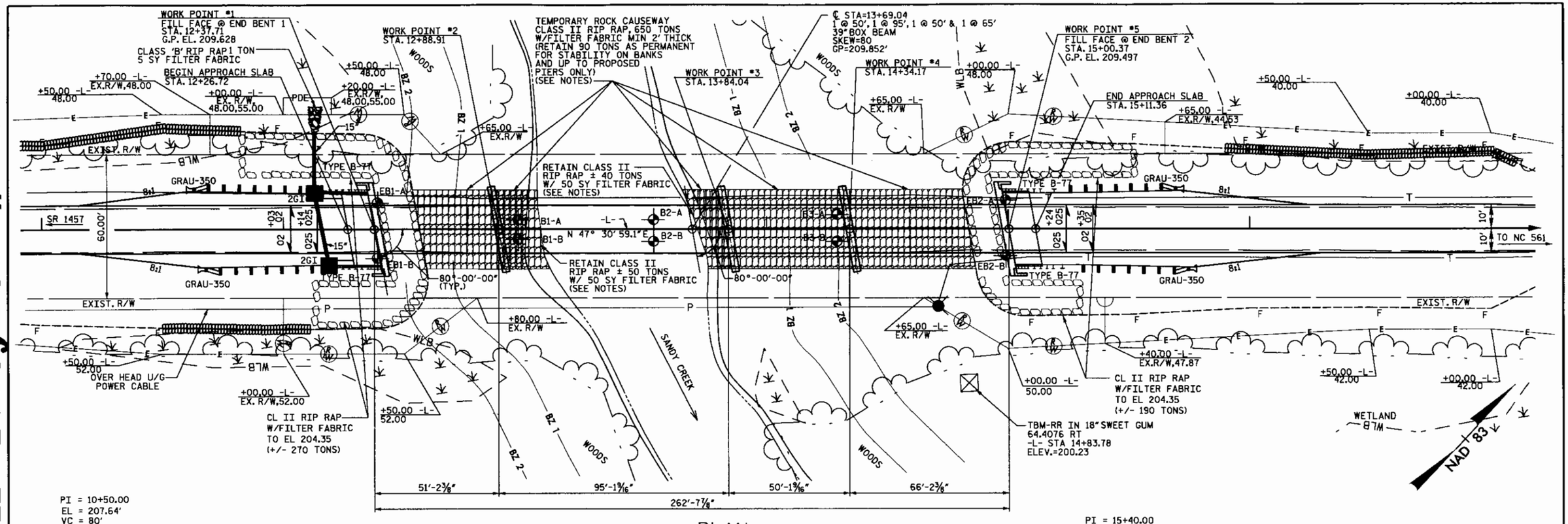

PLAN

SCALE : 1" = 20'

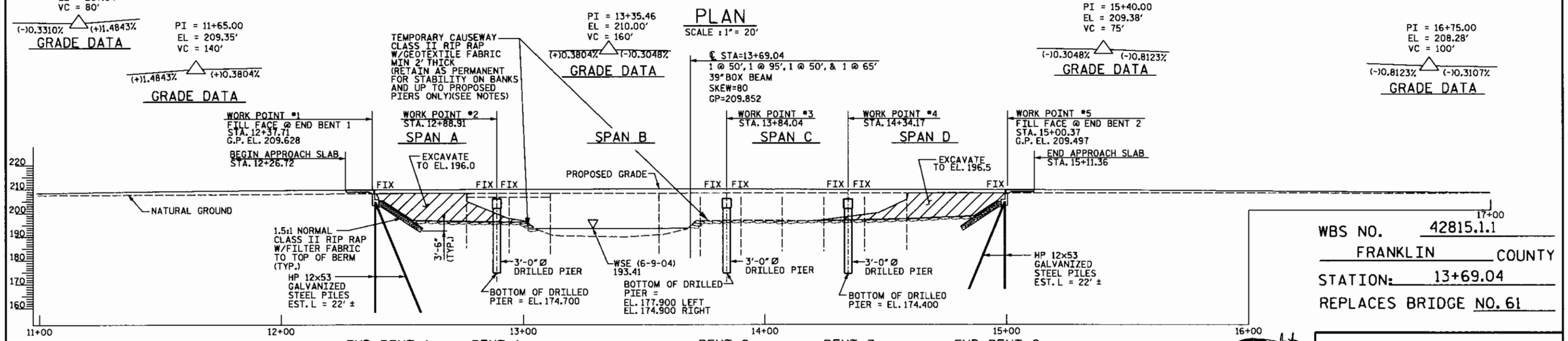

PROFILE ALONG ℄ SURVEY -L-

SCALE : 1" = 20'

EXISTING BRIDGE #61
SPANS: 1 @ 17.6', 1 @ 17.1', 1 @ 44.8', 1 @ 17.1', 2 @ 17.0', 1 @ 17.1', 1 @ 16.8', 1 @ 17.6'
TOTAL LENGTH = 182.12' CLEAR RDWY = 18.4'
BRIDGE MATERIAL: SPAN STEEL I-BEAMS OVER CREEK
REINFORCED CONCRETE DECK ON STEEL I BEAMS & TIMBER JOISTS.
END BENTS & BENT 1 & 4 THRU 8 TIMBER CAP ON TIMBER PILES.
BENT 2 & 3 REINFORCED CONCRETE CAP & COLUMNS.
EXISTING BRIDGE TO BE REMOVED

WBS NO. 42815.1.1

FRANKLIN COUNTY

STATION: 13+69.04

REPLACES BRIDGE NO. 61

STATE OF NORTH CAROLINA
DEPARTMENT OF TRANSPORTATION
RALEIGH

GENERAL DRAWING
BRIDGE #61 ON SR 1451
OVER SANDY CREEK

NORTH CAROLINA PROFESSIONAL SEAL 22072 ENGINEER JOHN ARTHUR DILWORTH
5-23-11

WETHERILL ENGINEERING
559 Jones Franklin Rd. Suite 164
Raleigh, N.C. 27606
Bus: 919 851 8077
Fax: 919 851 8107
LICENSE NO. F-0377

TRANSPORTATION PLANNING/DESIGN - BRIDGE/STRUCTURE DESIGN
CIVIL/SITE DESIGN - GIS/GPS - CONSTRUCTION OBSERVATION

REVISIONS						SHEET NO.
NO.	BY:	DATE:	NO.	BY:	DATE:	S-1
1			3			TOTAL SHEETS
2			4			25

5/23/2011 1:26:17 PM
P:\4100\WA05004B\STRUCTURE\DGN\FrankIIn61_GEN.dgn

DRAWN BY : J.C. PENDERGRAFT DATE : 4/11
CHECKED BY : J. DILWORTH DATE : 4/11

NOTES

1. FOR DRILLED PIERS, SEE SPECIAL PROVISIONS.
2. DRILLED PIERS AT INTERIOR BENT NO. 1, 2, AND 3 ARE DESIGNED FOR AN APPLIED LOAD OF 500 TONS PER PIER. CHECK FIELD CONDITIONS FOR THE REQUIRED END BEARING OF 80 TSF.
3. INSTALL DRILLED PIERS AT INTERIOR BENT NO. 1 THAT EXTEND TO AN ELEVATION NO HIGHER THAN 174.7 FEET. SATISFY THE REQUIRED END BEARING CAPACITY AND HAVE A MINIMUM PENETRATION OF 5.0 FEET, LEFT AND 5.2 FEET, RIGHT INTO ROCK AS DEFINED BY THE DRILLED PIER SPECIAL PROVISIONS.
4. INSTALL DRILLED PIERS AT INTERIOR BENT NO. 2 THAT EXTEND TO AN ELEVATION NO HIGHER THAN 177.9 FEET, LEFT AND 174.9 FEET, RIGHT. SATISFY THE REQUIRED END BEARING CAPACITY AND HAVE A MINIMUM PENETRATION OF 6.1 FEET, LEFT AND 6.8 FEET, RIGHT INTO ROCK AS DEFINED BY THE DRILLED PIER SPECIAL PROVISIONS.
5. INSTALL DRILLED PIERS AT INTERIOR BENT NO. 3 THAT EXTEND TO AN ELEVATION NO HIGHER THAN 174.4 FEET. SATISFY THE REQUIRED END BEARING CAPACITY AND HAVE A MINIMUM PENETRATION OF 5.5 FEET, LEFT AND 5.0 FEET, RIGHT INTO ROCK AS DEFINED BY THE DRILLED PIER SPECIAL PROVISIONS.
6. THE SCOUR CRITICAL ELEVATION (SCE) FOR INTERIOR BENTS 1, 2, AND 3 IS 178.5 FEET. THE SCOUR CRITICAL ELEVATIONS ARE FOR USED TO MONITOR POSSIBLE SCOUR PROBLEMS DURING THE LIFE OF STRUCTURE.
7. CSL TUBES ARE REQUIRED AND CSL TESTING MAY BE REQUIRED FOR DRILLED PIERS AT INTERIOR BENT NO. 1, 2, AND 3. THE DEPARTMENT WILL DETERMINE WHICH PIERS WILL BE CSL TESTED. FOR CROSSHOLE SONIC LOGGING, SEE SPECIAL PROVISIONS.
8. SID INSPECTIONS MAY BE REQUIRED FOR DRILLED PIERS AT INTERIOR BENT NO. 1, 2, AND 3. THE ENGINEER WILL DETERMINE THE NEED FOR SID INSPECTIONS IF CLEANLINESS OF THE SHAFT IS IN QUESTION.
9. FOR PILES, SEE SPECIAL PROVISIONS.
10. THE ALLOWABLE BEARING CAPACITY FOR PILES AT END BENTS 1 AND 2 IS 60 TONS PER PILE.
11. TESTING PILES WITH THE PILE DRIVING ANALYZER (PDA) DURING DRIVING MAY BE REQUIRED. THE ENGINEER WILL DETERMINE THE NEED FOR PDA TESTING. FOR PILE DRIVING ANALYZER, SEE SPECIAL PROVISIONS.
12. STEEL H-PILE POINTS ARE REQUIRED FOR H-PILES AT BOTH END BENT NO. 1 AND 2.
13. THE QUANTITY OF RIP RAP TO BE PAID FOR WILL BE THE ACTUAL NUMBER OF TONS OF EACH CLASS OF RIP RAP WHICH HAS BEEN INCORPORATED INTO THE COMPLETED AND ACCEPTED WORK. THE RIP RAP WILL BE MEASURED BY BEING WEIGHED IN TRUCKS CERTIFIED WEIGHING DEVICES. THE QUANTITY OF RIP RAP WILL BE PAID FOR AT THE CONTRACT UNIT PRICE PER TON..

    PLAIN RIP RAP CLASS II (2'-0" THICK) WITH FILTER FABRIC
    END BENT NO. 1 = 270 TONS W/330 SY FILTER FABRIC
    END BENT NO. 2 = 190 TONS W/230 SY FILTER FABRIC
    TOTAL = 460 TONS

    RETAIN THE PLAIN RIP RAP CLASS II PERMANENT WORK PAD FOR STABILITY ONLY ON BANKS AND UP TO PROPOSED BENTS AS FOLLOWS:
    WEST BANK = 50 TONS W/ 70 SY FILTER FABRIC
    EAST BANK = 40 TONS W/ 50 SY FILTER FABRIC
    TOTAL = 90 TONS

    PLAIN RIP RAP CLASS II TEMPORARY ACCESS (WORK PAD)
    TOTAL = 560 TONS WILL BE REMOVED ONCE WORK PAD IS NO LONGER NEEDED.
14. THIS STRUCTURE HAS BEEN DESIGNED IN ACCORDANCE WITH FHWA'S TECHNICAL ADVISORY T5140.20 (SCOUR AT BRIDGES).
15. THE EXISTING BRIDGE SHALL BE REMOVED BY SAWING AND/OR NON SHATTERING METHODS SUCH THAT DEBRIS WILL NOT FALL INTO THE WATER.
16. THIS BRIDGE HAS BEEN DESIGNED BY THE STRENGTH DESIGN METHOD AS SPECIFIED IN AASHTO STANDARD SPECIFICATIONS.
17. ASSUMED LIVE LOAD = HS 20 OR ALTERNATE LOADING, EXCEPT THAT THE BOX BEAM UNITS HAVE BEEN DESIGNED FOR HS25.
18. FOR CRANE SAFETY, SEE SPECIAL PROVISIONS.
19. FOR GROUT FOR STRUCTURES, SEE SPECIAL PROVISIONS.
20. FOR SUBMITTAL OF WORKING DRAWINGS, SEE SPECIAL PROVISIONS.
21. FOR FALSEWORK AND FORMWORK, SEE SPECIAL PROVISIONS.
22. FOR OTHER DESIGN DATA AND GENERAL NOTES, SEE SHEET SN.
23. FOR CURING CONCRETE, SEE SPECIAL PROVISIONS.
24. FOR CONSTRUCTION, MAINTENANCE AND REMOVAL OF TEMPORARY ACCESS AT STATION 13+69.04, SEE SPECIAL PROVISIONS.
25. FOR EROSION CONTROL MEASURES, SEE EROSION CONTROL PLANS.
26. FOR PRESTRESSED CONCRETE MEMBERS, SEE SPECIAL PROVISIONS.

⊕ DENOTES GEO-TECH BORING HOLE LOCATIONS.

HYDRAULIC DATA

DESIGN DISCHARGE	= 9,300 CFS
FREQUENCY OF DESIGN FLOOD	= 25 YR.
DESIGN HIGH WATER ELEVATION	= 203.4
DRAINAGE AREA	= 99.5 SQ. MI.
BASIC DISCHARGE (010D)	= 13,200 CFS
BASIC HIGH WATER ELEVATION	= 205.37

OVERTOPPING FLOOD DATA

OVERTOPPING DISCHARGE	= 19,000 CFS
FREQUENCY OF OVERTOPPING FLOOD	= ±500 YR.
OVERTOPPING FLOOD ELEVATION	= 207.73

TOTAL BILL OF MATERIAL

	REMOVAL OF EXISTING STRUCTURE	3'-0" DIA. DRILLED PIERS IN SOIL	3'-0" DIA. DRILLED PIERS NOT IN SOIL	PERMANENT STEEL CASING FOR 3'-0" DIA. DRILLED PIER	SID INSPECTION	CROSSHOLE SONIC LOGGING	UNCLASSIFIED STRUCTURE EXCAVATION	CLASS A CONCRETE	PDA TESTING	PDA ASSISTANCE
	LUMP SUM	LIN. FT.	LIN. FT.	LIN. FT.	EACH	EACH	LUMP SUM	CU. YDS.	EACH	EACH
SUPERSTRUCTURE										
END BENT NO. 1								16.9		
BENT NO. 1		30.4	10.2	27.7	1	1		23.7		
BENT NO. 2		28.3	12.9	29.0	1	1		22.6		
BENT NO. 3		34.7	10.5	28.0	1	1		22.6		
END BENT NO. 2								16.9		
TOTAL	LUMP SUM	93.4	33.6	84.7	3	3	LUMP SUM	102.7	1	1

	BRIDGE APPROACH SLABS	REINFORCING STEEL	SPIRAL COLUMN REINFORCING STEEL	HP 12x53 GALVANIZED STEEL PILES		STEEL PILE POINTS	CONCRETE BARRIER RAIL	RIP RAP CLASS II (2'-0" THICK)	FILTER FABRIC FOR DRAINAGE	RIP RAP CLASS II (CREEK BANKS)	FILTER FABRIC (FOR CAUSEWAY)
	LUMP SUM	LBS.	LBS.	NO.	LIN. FT.	EACH	LIN. FT.	TONS	SQ. YDS.	TONS	SQ. YDS.
SUPERSTRUCTURE	LUMP SUM						520.00				
END BENT NO. 1		3005		8	180.00	8		270	330		
BENT NO. 1		6940	1001								
BENT NO. 2		6767	941								
BENT NO. 3		6794	1008								
END BENT NO. 2		3005		8	180.00	8		190	230		
TOTAL	LUMP SUM	26511	2950	16	360.00	16	520.00	460	560	90	780

	ELASTOMERIC BEARINGS	3'-0" x 3'-3" PRESTRESSED CONCRETE BOX BEAM		CONSTRUCTION MAINTENANCE AND REMOVAL OF TEMPORARY ACCESS AT STATION 13+69.04
	LUMP SUM	NO.	LIN. FT.	LUMP SUM
SUPERSTRUCTURE	LUMP SUM	44	2860.00	
END BENT NO. 1				
BENT NO. 1				
BENT NO. 2				
BENT NO. 3				
END BENT NO. 2				
TOTAL	LUMP SUM	44	2860.00	LUMP SUM

NORTH CAROLINA PROFESSIONAL SEAL 22072 ENGINEER JOHN ARTHUR DILWORTH 5-23-11

WBS NO. 42815.1.1

FRANKLIN COUNTY

STATION: 13+69.04

REPLACES BRIDGE NO. 61

STATE OF NORTH CAROLINA
DEPARTMENT OF TRANSPORTATION
RALEIGH

BRIDGE #61 ON SR 1451
OVER SANDY CREEK

WETHERILL ENGINEERING
559 Jones Franklin Rd. Suite 164
Raleigh, N.C. 27606
Bus: 919 851 8077
Fax: 919 851 8107
LICENSE NO. F-0377

TRANSPORTATION PLANNING/DESIGN - BRIDGE/STRUCTURE DESIGN
CIVIL/SITE DESIGN - GIS/GPS - CONSTRUCTION OBSERVATION

REVISIONS								SHEET NO.
NO.	BY:	DATE:	NO.	BY:	DATE:			S-2
1			3					TOTAL SHEETS
2			4					25

DRAWN BY : J.C. PENDERGRAFT DATE : 4/11
CHECKED BY : J.A. DILWORTH DATE : 4/11

P:\4100\N\D500HBS\STRUCTURE\DGN\Franklin61_GEN.dgn
5/23/2011 1:26:33 PM

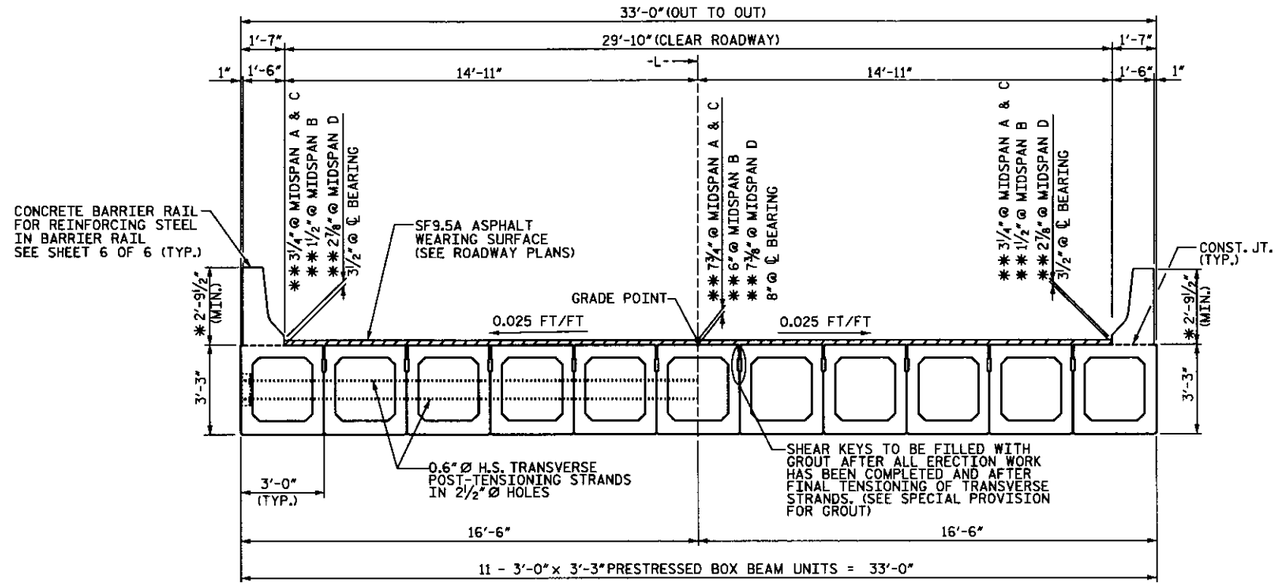

HALF SECTION AT INTERMEDIATE DIAPHRAGM

HALF SECTION THROUGH VOIDS

TYPICAL SECTION

* THE MINIMUM HEIGHT OF THE BARRIER RAIL IS SHOWN. THE HEIGHT OF THE BARRIER RAIL VARIES WHILE THE TOP OF BARRIER RAIL FOLLOWS THE PROFILE OF THE GUTTERLINE.

** BASED ON PREDICTED FINAL CAMBER AND THEORETICAL GRADE LINE ELEVATIONS.

FIXED END

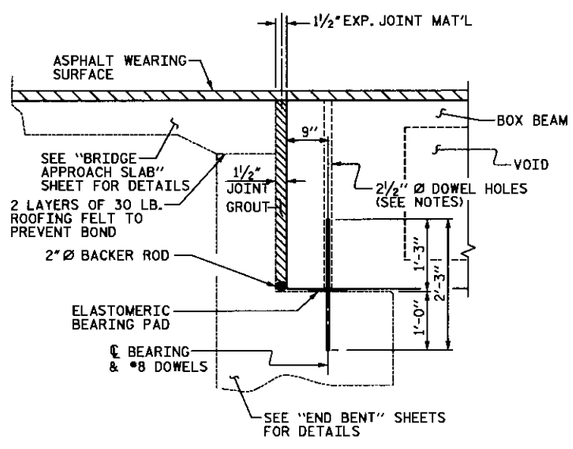

SECTION AT END BENT

FIXED END FIXED END

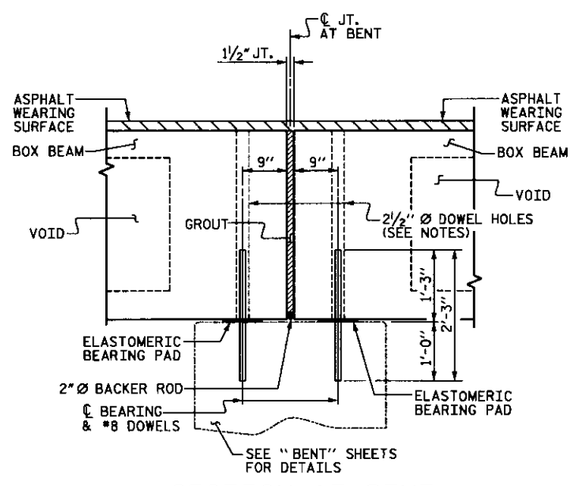

SECTION AT BENT

NOTE:
℄ OF DOWELS SHALL MATCH ℄ OF DOWEL HOLES IN BOX BEAM UNITS.

NOTES

ASSUMED LIVE LOAD = HS20 OR ALTERNATE LOADING, EXCEPT THAT THE BEAMS HAVE BEEN DESIGNED FOR HS25.

ALL PRESTRESSING STRANDS SHALL BE 7-WIRE LOW RELAXATION GRADE 270 STRANDS AND SHALL CONFORM TO AASHTO M203 EXCEPT FOR SAMPLING REQUIREMENTS WHICH SHALL BE IN ACCORDANCE WITH THE STANDARD SPECIFICATIONS.

ALL REINFORCING STEEL CAST WITH THE BOX BEAM SECTIONS SHALL BE GRADE 60 AND SHALL BE INCLUDED IN THE UNIT PRICE BID FOR PRESTRESSED CONCRETE BOX BEAMS.

RECESSES FOR TRANSVERSE STRANDS SHALL BE GROUTED AFTER THE TENSIONING OF THE STRANDS.

THE 2½" Ø DOWEL HOLES AT FIXED ENDS OF BOX BEAM SECTIONS SHALL BE FILLED WITH GROUT.

THE 2" Ø BACKER ROD SHALL CONFORM TO THE REQUIREMENTS OF TYPE M BOND BREAKER. SEE SECTION 1028 OF THE STANDARD SPECIFICATIONS.

THE TRANSFER OF LOAD FROM THE ANCHORAGES TO THE BOX BEAM UNIT SHALL BE DONE WHEN THE CONCRETE HAS REACHED A COMPRESSIVE STRENGTH OF NOT LESS THAN 4000 PSI FOR SPANS A, C & D AND 5600 PSI FOR SPAN B.

ALL REINFORCING STEEL IN BARRIER RAILS SHALL BE EPOXY COATED.

PRESTRESSING STRANDS SHALL BE CUT FLUSH WITH THE BOX BEAM UNIT ENDS.

APPLY EPOXY PROTECTIVE COATING TO BOX BEAM UNIT ENDS.

VERTICAL GROOVED CONTRACTION JOINTS, ½" IN DEPTH, SHALL BE TOOLED IN ALL EXPOSED FACES OF THE BARRIER RAIL AND IN ACCORDANCE WITH ARTICLE 825-10(B) OF THE STANDARD SPECIFICATIONS. A VERTICAL CONTRACTION JOINT SHALL BE LOCATED AT EACH THIRD POINT BETWEEN BARRIER RAIL EXPANSION JOINTS. ONLY ONE CONTRACTION JOINT IS REQUIRED AT MIDPOINT OF BARRIER RAIL SEGMENTS LESS THAN 20 FEET IN LENGTH AND NO CONTRACTION JOINTS ARE REQUIRED FOR THOSE SEGMENTS LESS THAN 10 FEET IN LENGTH.

THE LOCATION OF THE VOID DRAINS MAY BE SHIFTED SLIGHTLY WHERE NECESSARY TO CLEAR PRESTRESSING STRANDS OR TRANSVERSE REINFORCING STEEL.

THE MINIMUN HEIGHT OF THE BARRIER RAIL IS SHOWN. THE HEIGHT OF THE BARRIER RAIL VARIES WHILE THE TOP OF THE RAIL FOLLOWS THE PROFILE OF THE GUTTERLINE.

ALL MATERIAL AND WORKMANSHIP SHALL COMPLY WITH THE APPLICABLE REQUIREMENTS OF THE STANDARD SPECIFICATIONS FOR ROADS AND STRUCTURES OF THE NC DEPARTMENT OF TRANSPORTATION DATED JULY 2006 AND WITH THE SPECIAL PROVISIONS.

UNLESS OTHERWISE NOTED ON THE PLANS, ALL EXPOSED CORNERS ON STRUCTURE SHALL BE CHAMFERED ¾".

FOR GROUT FOR STRUCTURES, SEE SPECIAL PROVISIONS.

FOR PRESTRESSED CONCRETE MEMBERS, SEE SPECIAL PROVISIONS.

NORTH CAROLINA PROFESSIONAL SEAL 22072 ENGINEER JOHN ARTHUR DILLWORTH 5-23-11

WBS NO. 42815.1.1

FRANKLIN COUNTY

STATION: 13+69.04

REPLACES BRIDGE NO. 61

SHEET 1 OF 10

STATE OF NORTH CAROLINA
DEPARTMENT OF TRANSPORTATION
RALEIGH

STANDARD
3'-0" X 3'-3"
PRESTRESSED CONCRETE
BOX BEAM UNIT

WETHERILL ENGINEERING
559 Jones Franklin Rd. Suite 164
Raleigh, N.C. 27606
Bus: 919 851 8077
Fax: 919 851 8107
LICENSE NO. F-0377

TRANSPORTATION PLANNING/DESIGN - BRIDGE/STRUCTURE DESIGN
CIVIL/SITE DESIGN - GIS/GPS - CONSTRUCTION OBSERVATION

ASSEMBLED BY : JCP		DATE : 3-2011	
CHECKED BY : JAD		DATE : 3-2011	
DRAWN BY : TLA 5/05	ADDED 7/11/05R		
CHECKED BY : GM 6/05	REV. 5/1/06	TLA/GM	

REVISIONS								SHEET NO.
NO.	BY:	DATE:	NO.	BY:	DATE:			S-3
1			3					TOTAL SHEETS
2			4					25

P:\41000\M\A050049\STRUCTURE\DGN\typical section.dgn
5/23/2011 1:29:55 PM

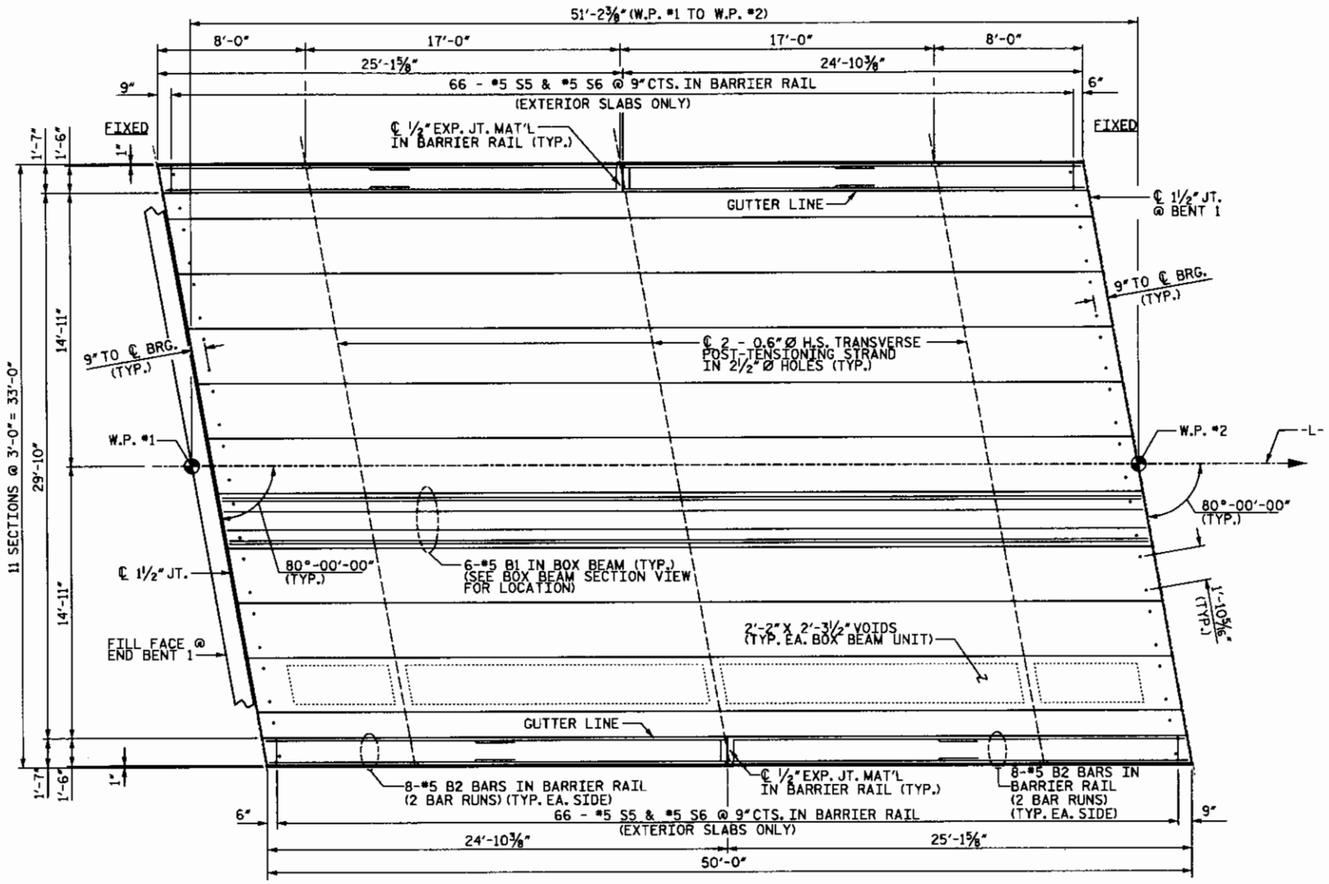

PLAN OF SPAN A

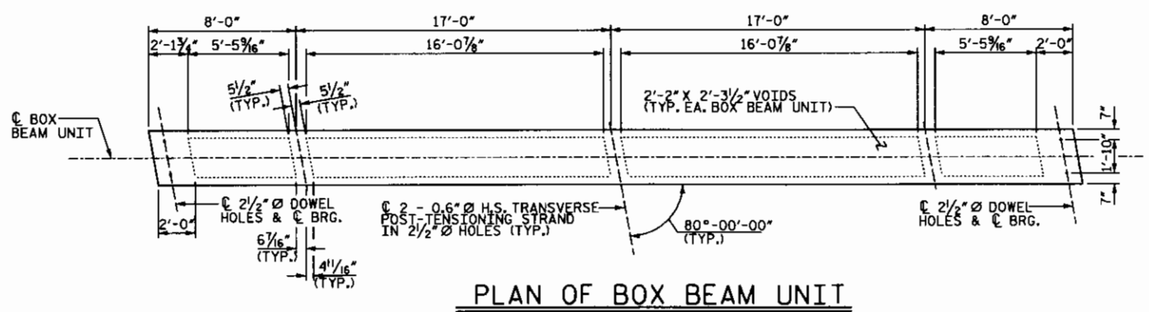

PLAN OF BOX BEAM UNIT

WBS NO. 42815.1.1

FRANKLIN COUNTY

STATION: 13+69.04

REPLACES BRIDGE NO. 61

SHEET 2 OF 10

STATE OF NORTH CAROLINA
DEPARTMENT OF TRANSPORTATION
RALEIGH

SUPERSTRUCTURE
PLAN OF SPAN
SPAN A

WETHERILL ENGINEERING
559 Jones Franklin Rd. Suite 164
Raleigh, N.C. 27606
Bus: 919 851 8077
Fax: 919 851 8107
LICENSE NO. F-0377

TRANSPORTATION PLANNING/DESIGN - BRIDGE/STRUCTURE DESIGN
CIVIL/SITE DESIGN - GIS/GPS - CONSTRUCTION OBSERVATION

REVISIONS						SHEET NO.
NO.	BY:	DATE:	NO.	BY:	DATE:	S-4
1			3			TOTAL SHEETS
2			4			25

DRAWN BY : J.C. PENDERGRAFT DATE : 4/11
CHECKED BY : J.A. DILWORTH DATE : 4/11

P:\4100\M405004B\STRUCTURE\DGN\sponsa.dgn
5/23/2011 1:31:16 PM

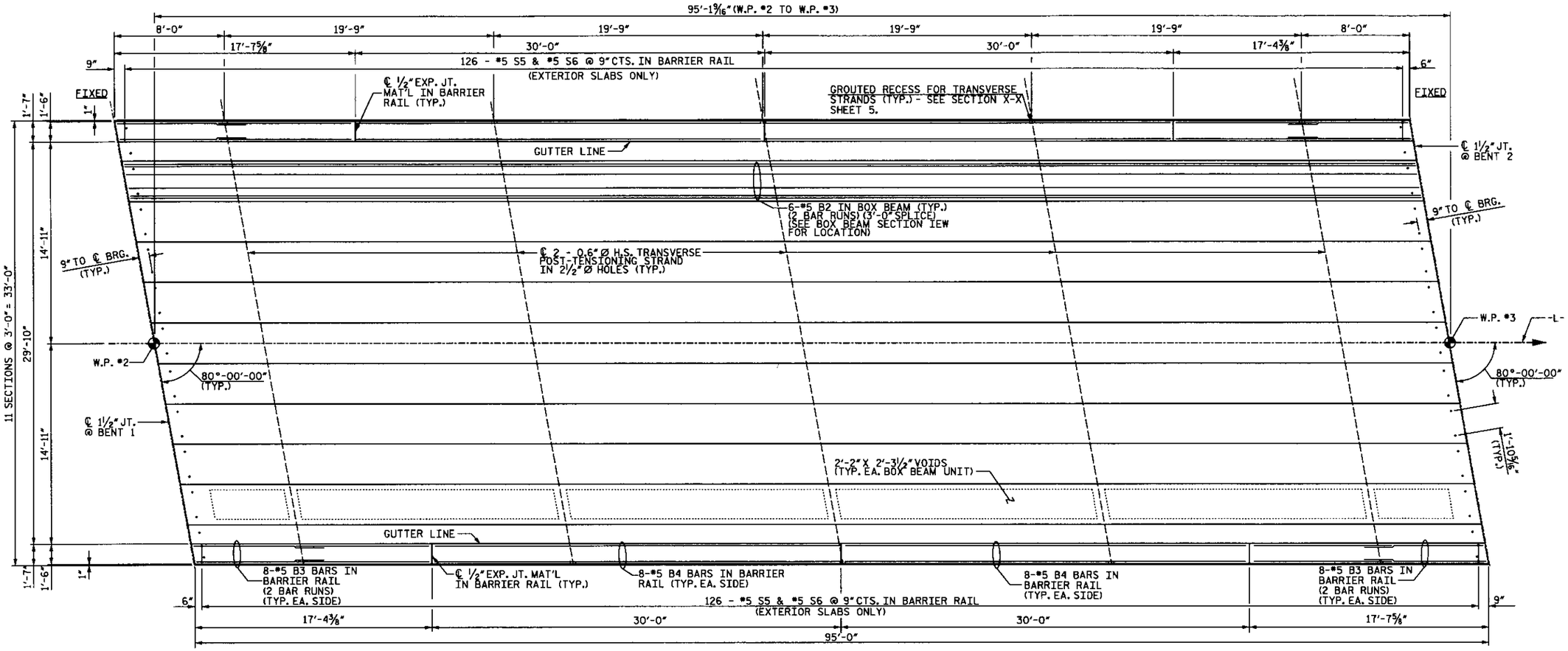

PLAN OF SPAN B

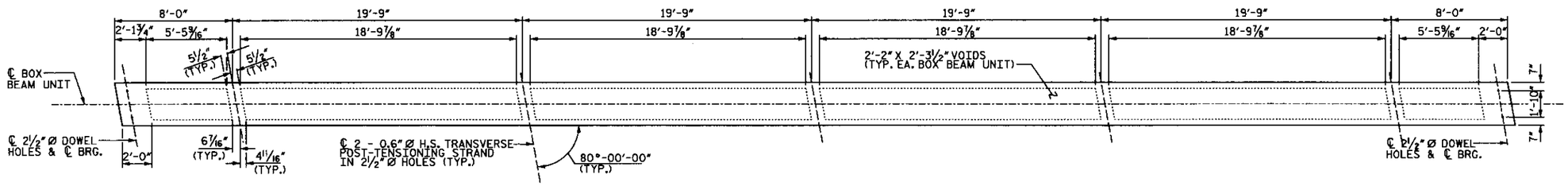

PLAN OF BOX BEAM UNIT

WBS NO. 42815.1.1

FRANKLIN COUNTY

STATION: 13+69.04

REPLACES BRIDGE NO. 61

SHEET 3 OF 10

STATE OF NORTH CAROLINA
DEPARTMENT OF TRANSPORTATION
RALEIGH

SUPERSTRUCTURE
PLAN OF SPAN
SPAN B

WETHERILL ENGINEERING
559 Jones Franklin Rd. Suite 164
Raleigh, N.C. 27606
Bus: 919 851 8077
Fax: 919 851 8107
LICENSE NO. F-0377

TRANSPORTATION PLANNING/DESIGN - BRIDGE/STRUCTURE DESIGN
CIVIL/SITE DESIGN - GIS/GPS - CONSTRUCTION OBSERVATION

REVISIONS								SHEET NO.
NO.	BY:	DATE:	NO.	BY:	DATE:			S-5
1			3					TOTAL SHEETS
2			4					25

DRAWN BY : J.C. PENDERGRAFT DATE : 4/11
CHECKED BY : J.A. DILWORTH DATE : 4/11

P:\4100\W\05004\STRUCTURE\DGN\spans.dgn
5/23/2011 14:13:33 PM

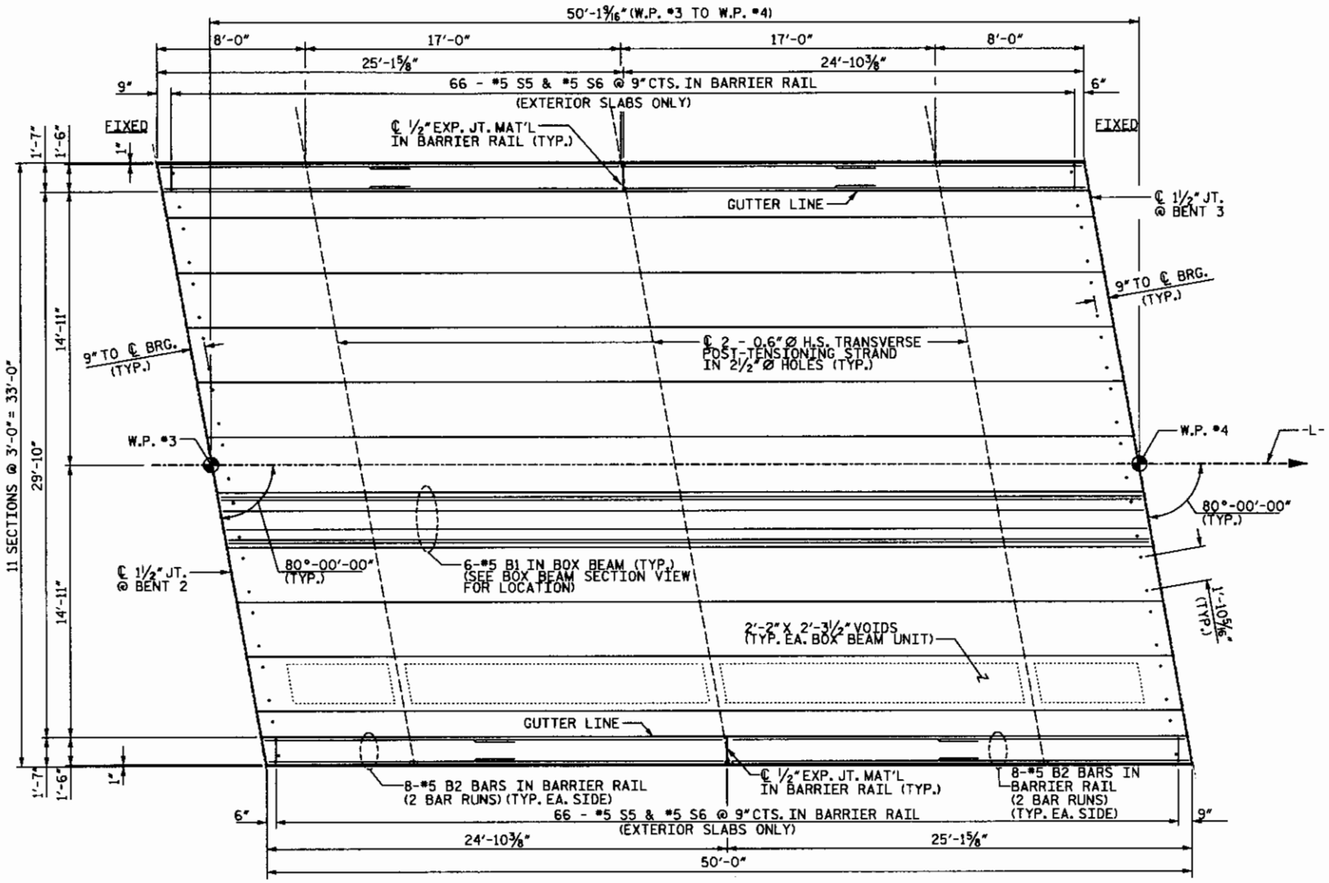

PLAN OF SPAN C

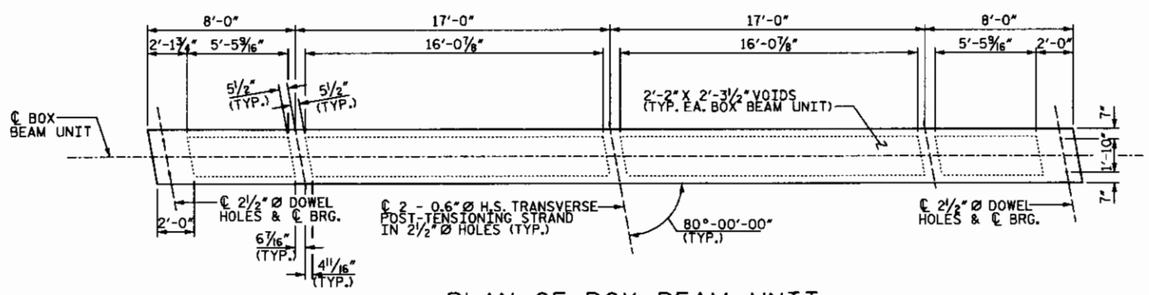

PLAN OF BOX BEAM UNIT

NORTH CAROLINA PROFESSIONAL SEAL 22072 ENGINEER JOHN ARTHUR DILWORTH

WBS NO. 42815.1.1

FRANKLIN COUNTY

STATION: 13+69.04

REPLACES BRIDGE NO. 61

SHEET 4 OF 10

STATE OF NORTH CAROLINA
DEPARTMENT OF TRANSPORTATION
RALEIGH

SUPERSTRUCTURE
PLAN OF SPAN
SPAN C

WETHERILL ENGINEERING
559 Jones Franklin Rd. Suite 164
Raleigh, N.C. 27606
Bus: 919 851 8077
Fax: 919 851 8107
LICENSE NO. F-0377

TRANSPORTATION PLANNING/DESIGN - BRIDGE/STRUCTURE DESIGN
CIVIL/SITE DESIGN - GIS/GPS - CONSTRUCTION OBSERVATION

REVISIONS								SHEET NO.
NO.	BY:	DATE:	NO.	BY:	DATE:			S-6
1			3					TOTAL SHEETS
2			4					25

DRAWN BY : J.C. PENDERGRAFT DATE : 4/11
CHECKED BY : J.A. DILWORTH DATE : 4/11

P:\41100\M050049\STRUCTURE\DGN\spans.dgn
5/23/2011 1:31:47 PM

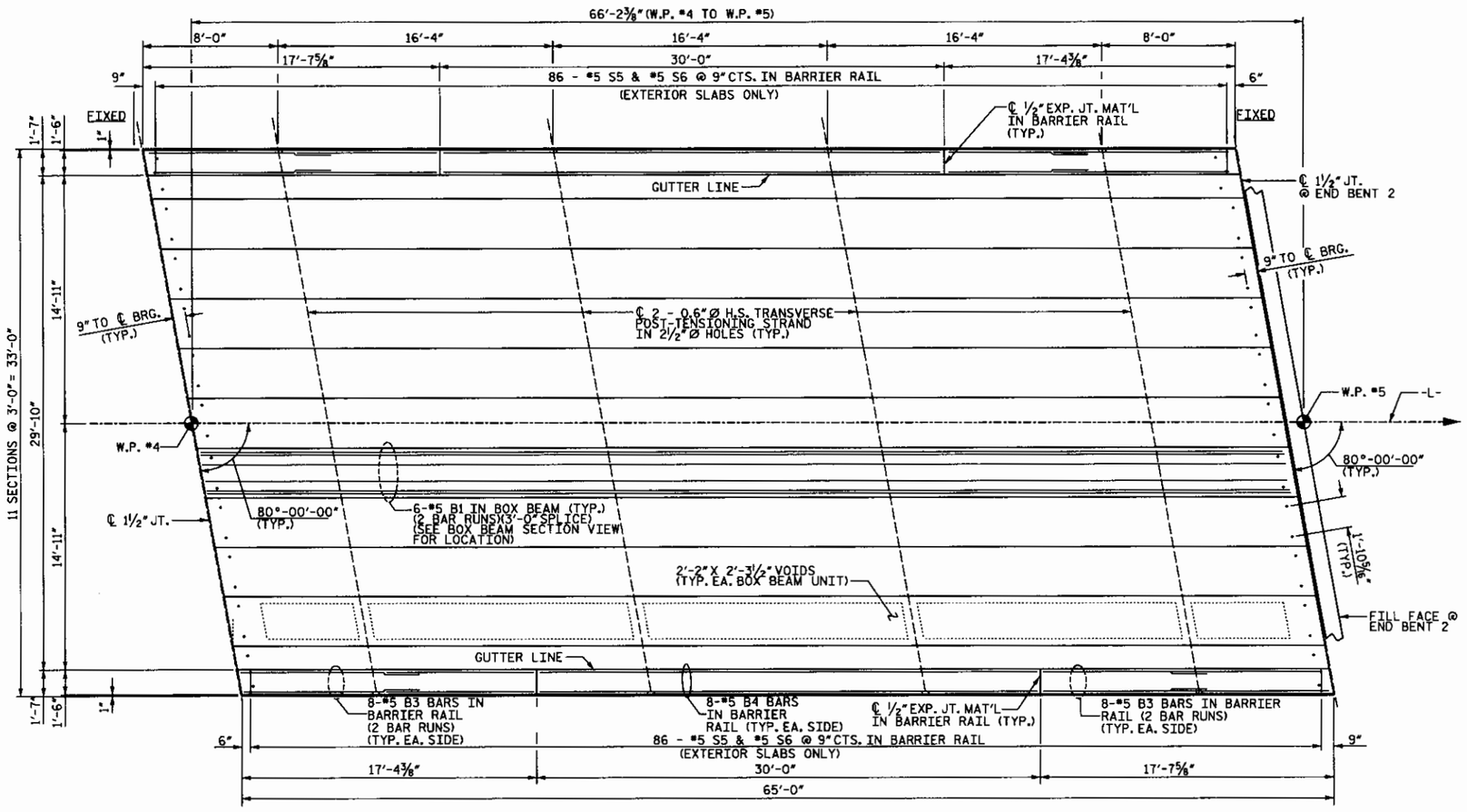

PLAN OF SPAN D

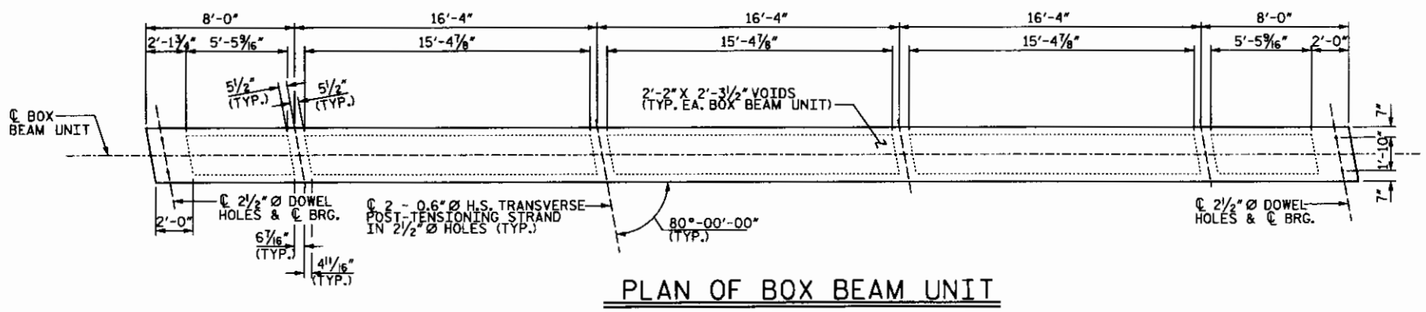

PLAN OF BOX BEAM UNIT

STATE OF NORTH CAROLINA
SEAL 22072
JOHN ARTHUR DILWORTH
5-23-11

WBS NO. 42815.1.1

FRANKLIN COUNTY

STATION: 13+69.04

REPLACES BRIDGE NO. 61

SHEET 5 OF 10

STATE OF NORTH CAROLINA
DEPARTMENT OF TRANSPORTATION
RALEIGH

SUPERSTRUCTURE
PLAN OF SPAN
SPAN D

WETHERILL ENGINEERING
559 Jones Franklin Rd. Suite 164
Raleigh, N.C. 27606
Bus: 919 851 8077
Fax: 919 851 8107
LICENSE NO. F-0377

TRANSPORTATION PLANNING/DESIGN - BRIDGE/STRUCTURE DESIGN
CIVIL/SITE DESIGN - GIS/GPS - CONSTRUCTION OBSERVATION

REVISIONS						SHEET NO.
NO.	BY:	DATE:	NO.	BY:	DATE:	S-7
1			3			TOTAL SHEETS
2			4			25

DRAWN BY : J.C. PENDERGRAFT DATE : 4/11
CHECKED BY : J.A. DILWORTH DATE : 4/11

P:\4100\M\R50046\STRUCTURE\DGN\spans.dgn
5/23/2011 1:31:59 PM

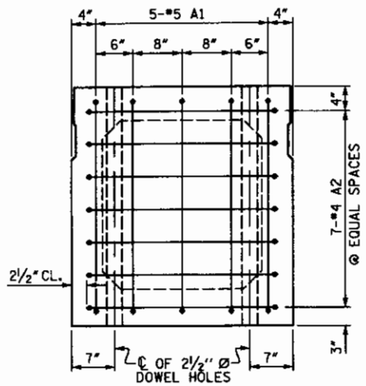

END ELEVATION

SHOWING PLACEMENT OF #5 & #4 "A" BARS AND LOCATION OF DOWEL HOLES.
(INTERIOR BOX BEAM SECTION SHOWN-EXTERIOR SECTION SIMILAR EXCEPT SHEAR KEY LOCATION. STRAND LAYOUT NOT SHOWN.)

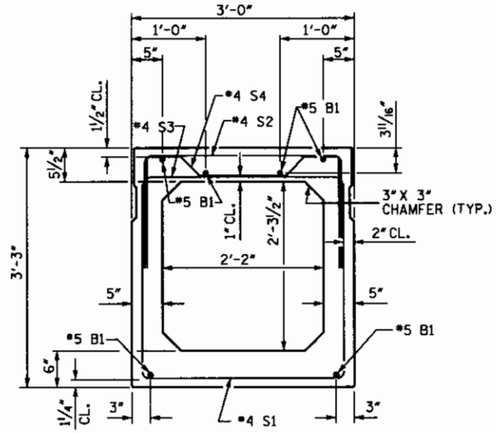

INTERIOR BOX BEAM SECTION

(STRAND LAYOUT NOT SHOWN)

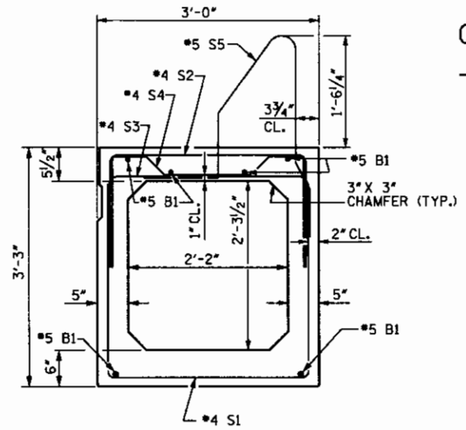

EXTERIOR BOX BEAM SECTION

(STRAND LAYOUT NOT SHOWN)

0.6" Ø LOW RELAXATION STRAND LAYOUT

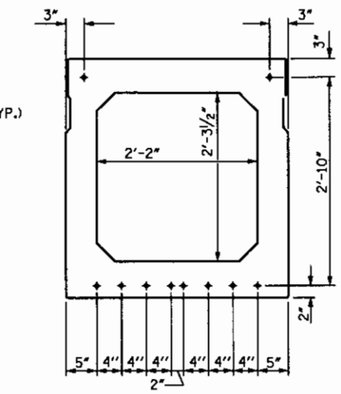

TYPICAL STRAND LOCATION

(10 STRANDS REQUIRED)

(INTERIOR BOX BEAM SECTION SHOWN-EXTERIOR SECTION SIMILAR EXCEPT SHEAR KEY LOCATION)

DEBONDING LEGEND

● FULLY BONDED STRANDS

GRADE 270 STRANDS	
	0.6" Ø L.R.
AREA (SQUARE INCHES)	0.217
ULTIMATE STRENGTH (LBS. PER STRAND)	58,600
APPLIED PRESTRESS (LBS. PER STRAND)	43,950

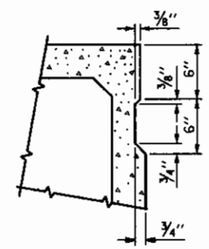

SHEAR KEY DETAIL

NOTE: OMIT SHEAR KEY ON OUTSIDE FACE OF EXTERIOR BOX BEAMS.

BAR TYPES

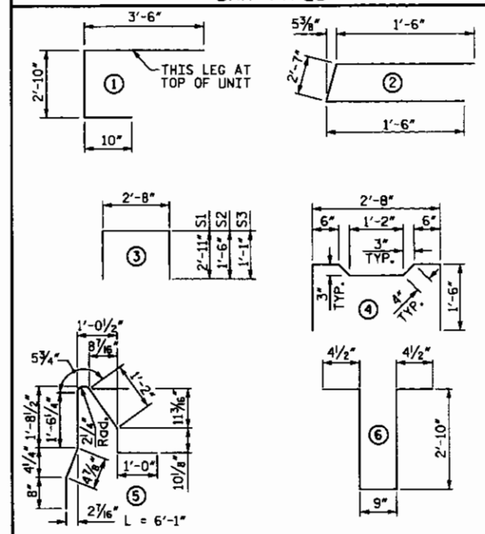

ALL BAR DIMENSIONS ARE OUT TO OUT

BILL OF MATERIAL FOR ONE BOX BEAM SECTION

BAR	NUMBER	SIZE	TYPE	EXTERIOR UNIT LENGTH	EXTERIOR UNIT WEIGHT	INTERIOR UNIT LENGTH	INTERIOR UNIT WEIGHT
A1	10	#5	1	7'-2"	75	7'-2"	75
A2	32	#4	2	5'-7"	119	5'-7"	119
B1	6	#5	STR	49'-8"	311	49'-8"	311
K1	9	#4	6	7'-2"	43	7'-2"	43
K2	6	#4	STR	2'-7"	10	2'-7"	10
S1	46	#4	3	8'-6"	261	8'-6"	261
S2	46	#4	3	5'-8"	174	5'-8"	174
S3	73	#4	3	4'-10"	236	4'-10"	236
S4	27	#4	4	5'-10"	105	5'-10"	105
* S5	66	#5	5	6'-1"	419	--	--
REINFORCING STEEL					1334 LBS.		1334 LBS.
* EPOXY COATED REINF. STEEL					419 LBS.		
5000 P.S.I. CONCRETE					10.2 CU. YDS.		10.2 CU. YDS.
0.6" Ø L.R. STRANDS					No. 10		No. 10

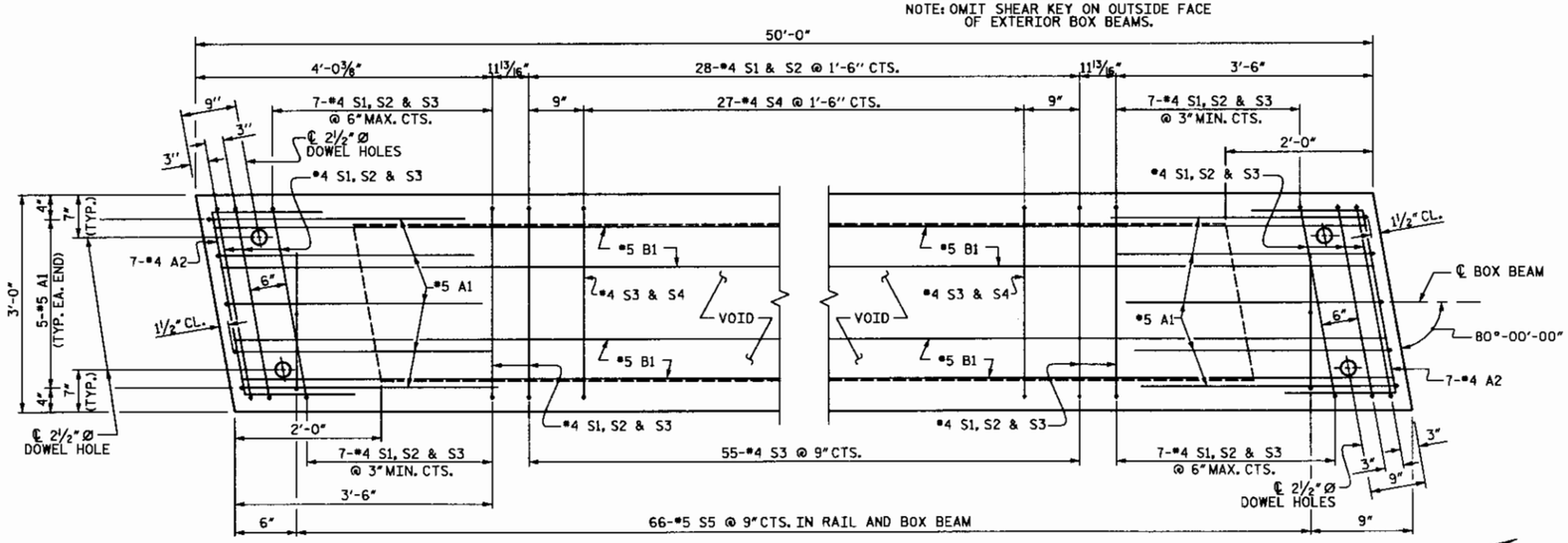

PLAN OF BOX BEAM

EXTERIOR UNIT SHOWN, INTERIOR UNIT SIMILAR EXCEPT OMIT #5 S5 BARS.
FOR LOCATION OF DIAPHRAGMS, SEE PLAN OF SPANS.
FOR REINFORCING STEEL IN DIAPHRAGMS, SEE DIAPHRAGM DETAILS.

WETHERILL ENGINEERING
559 Jones Franklin Rd. Suite 164
Raleigh, N.C. 27606
Bus: 919 851 8077
Fax: 919 851 8107
LICENSE NO. F-0377
TRANSPORTATION PLANNING/DESIGN - BRIDGE/STRUCTURE DESIGN
CIVIL/SITE DESIGN - GIS/GPS - CONSTRUCTION OBSERVATION

NORTH CAROLINA PROFESSIONAL SEAL 22072 ENGINEER JOHN ARTHUR DILWORTH
5-23-11

WBS NO. 42815.1.1
FRANKLIN COUNTY
STATION: 13+69.04
REPLACES BRIDGE NO. 61

SHEET 6 OF 10

STATE OF NORTH CAROLINA
DEPARTMENT OF TRANSPORTATION
RALEIGH

STANDARD
3'-0" X 3'-3"
PRESTRESSED CONCRETE
BOX BEAM UNIT
SPAN "A & C"

STD. NO. PCBB6

REVISIONS						SHEET NO.
NO.	BY:	DATE:	NO.	BY:	DATE:	S-8
1			3			TOTAL SHEETS
2			4			25

DRAWN BY : J.C. PENDERGRAFT DATE : 4/11
CHECKED BY : J.A. DILWORTH DATE : 4/11

P:\410DWA050048\STRUCTURE\DGN\pcbb6\span A&C.dgn
5/23/2011 11:34:47 PM

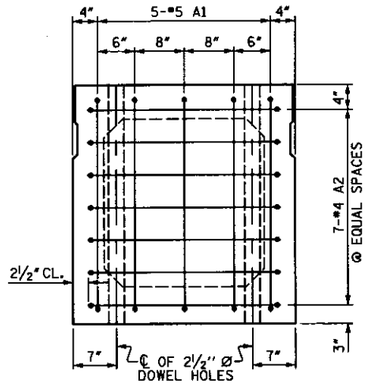

END ELEVATION

SHOWING PLACEMENT OF #5 & #4 "A" BARS AND LOCATION OF DOWEL HOLES.
(INTERIOR BOX BEAM SECTION SHOWN-EXTERIOR SECTION SIMILAR EXCEPT SHEAR KEY LOCATION. STRAND LAYOUT NOT SHOWN.)

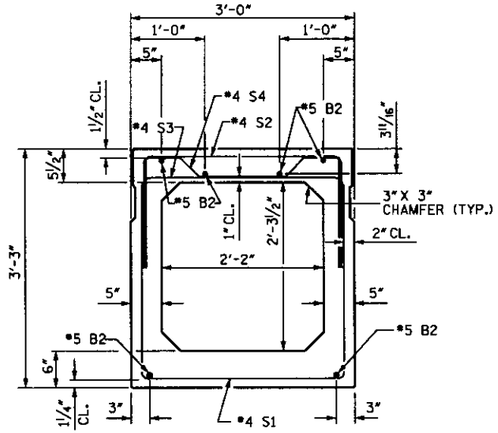

INTERIOR BOX BEAM SECTION

(STRAND LAYOUT NOT SHOWN)

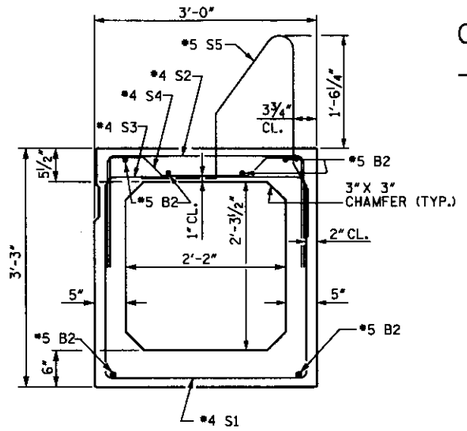

EXTERIOR BOX BEAM SECTION

(STRAND LAYOUT NOT SHOWN)

0.6" Ø LOW RELAXATION STRAND LAYOUT

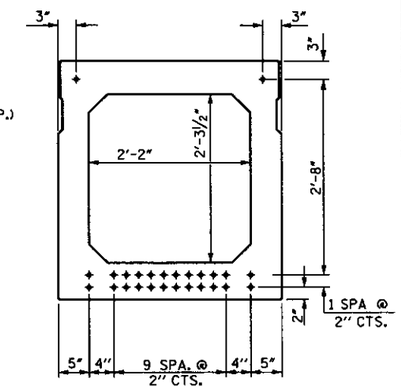

TYPICAL STRAND LOCATION

(26 STRANDS REQUIRED)

(INTERIOR BOX BEAM SECTION SHOWN-EXTERIOR SECTION SIMILAR EXCEPT SHEAR KEY LOCATION)

DEBONDING LEGEND

● FULLY BONDED STRANDS

GRADE 270 STRANDS	
	0.6" Ø L.R.
AREA (SQUARE INCHES)	0.217
ULTIMATE STRENGTH (LBS. PER STRAND)	58,600
APPLIED PRESTRESS (LBS. PER STRAND)	43,950

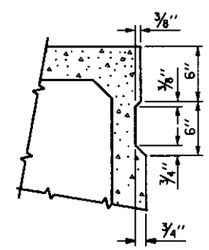

SHEAR KEY DETAIL

NOTE: OMIT SHEAR KEY ON OUTSIDE FACE OF EXTERIOR BOX BEAMS.

BAR TYPES

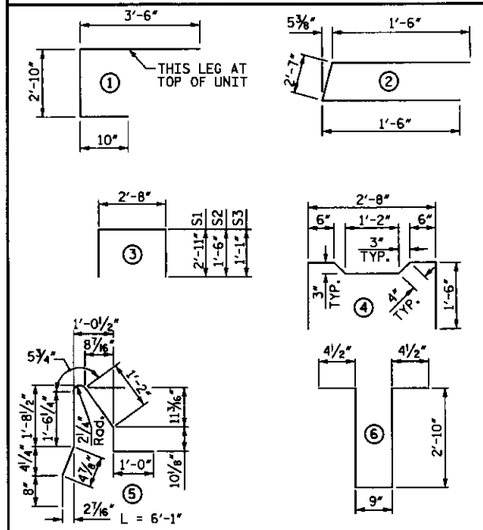

ALL BAR DIMENSIONS ARE OUT TO OUT

BILL OF MATERIAL FOR ONE BOX BEAM SECTION

				EXTERIOR UNIT		INTERIOR UNIT	
BAR	NUMBER	SIZE	TYPE	LENGTH	WEIGHT	LENGTH	WEIGHT
A1	10	#5	1	7'-2"	75	7'-2"	75
A2	44	#4	2	5'-7"	164	5'-7"	164
B2	12	#5	STR	48'-10"	612	48'-10"	612
K1	15	#4	6	7'-2"	72	7'-2"	72
K2	10	#4	STR	2'-7"	17	2'-7"	17
S1	76	#4	3	8'-6"	432	8'-6"	432
S2	76	#4	3	5'-8"	288	5'-8"	288
S3	133	#4	3	4'-10"	429	4'-10"	429
S4	57	#4	4	5'-10"	222	5'-10"	222
* S5	126	#5	5	6'-1"	799	--	--
REINFORCING STEEL					2311		2311
* EPOXY COATED REINF. STEEL					799 LBS.		
7000 P.S.I. CONCRETE					18.6 CU. YDS.		18.6 CU. YDS.
0.6" Ø L.R. STRANDS					No. 26		No. 26

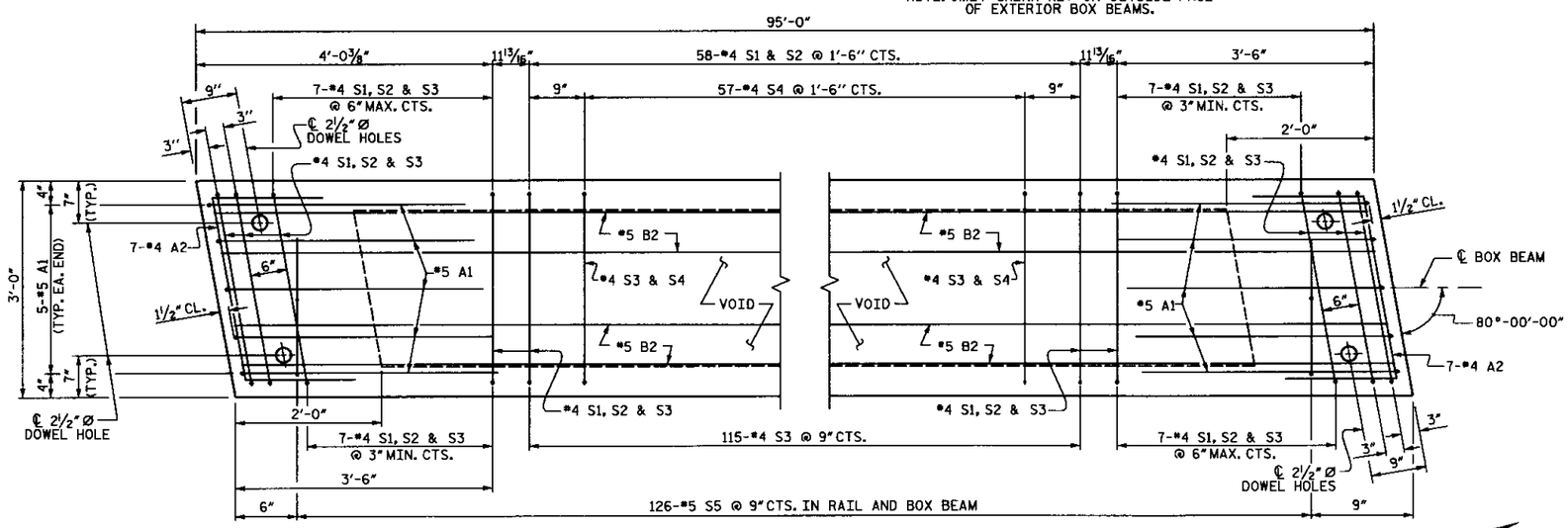

PLAN OF BOX BEAM

EXTERIOR UNIT SHOWN, INTERIOR UNIT SIMILAR EXCEPT OMIT #5 S5 BARS.
FOR LOCATION OF DIAPHRAGMS, SEE PLAN OF SPANS.
FOR REINFORCING STEEL IN DIAPHRAGMS, SEE DIAPHRAGM DETAILS.

WETHERILL ENGINEERING
559 Jones Franklin Rd. Suite 164
Raleigh, N.C. 27606
Bus: 919 851 8077
Fax: 919 851 8107
LICENSE NO. F-0377

TRANSPORTATION PLANNING/DESIGN - BRIDGE/STRUCTURE DESIGN
CIVIL/SITE DESIGN - GIS/GPS - CONSTRUCTION OBSERVATION

NORTH CAROLINA PROFESSIONAL SEAL 22072 ENGINEER JOHN ARTHUR DILWORTH 5-23-11

WBS NO. 42815.1.1

FRANKLIN COUNTY

STATION: 13+69.04

REPLACES BRIDGE NO. 61

SHEET 7 OF 10

STATE OF NORTH CAROLINA
DEPARTMENT OF TRANSPORTATION
RALEIGH

STANDARD
3'-0" X 3'-3"
PRESTRESSED CONCRETE
BOX BEAM UNIT
SPAN "B"

STD. NO. PCBB6

REVISIONS						SHEET NO.
NO.	BY:	DATE:	NO.	BY:	DATE:	S-9
1			3			TOTAL SHEETS
2			4			25

DRAWN BY : J.C. PENDERGRAFT DATE : 4/11
CHECKED BY : J.A. DILWORTH DATE : 4/11

P:\4100\M050049\STRUCTURE\DGN\pcbb6\span B.dgn
5/23/2011 11:53:05 PM

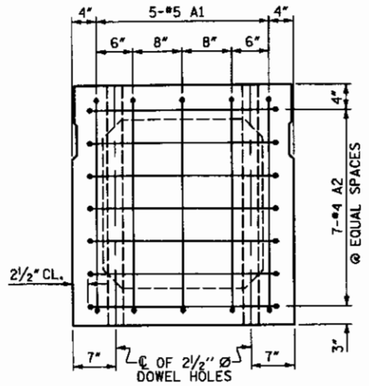

END ELEVATION

SHOWING PLACEMENT OF #5 & #4 "A" BARS AND LOCATION OF DOWEL HOLES.
(INTERIOR BOX BEAM SECTION SHOWN-EXTERIOR SECTION SIMILAR EXCEPT SHEAR KEY LOCATION. STRAND LAYOUT NOT SHOWN.)

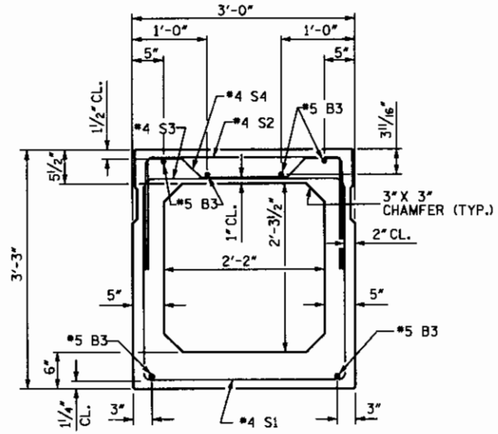

INTERIOR BOX BEAM SECTION

(STRAND LAYOUT NOT SHOWN)

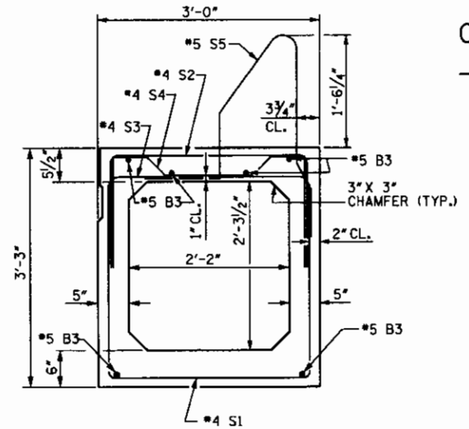

EXTERIOR BOX BEAM SECTION

(STRAND LAYOUT NOT SHOWN)

0.6"Ø LOW RELAXATION STRAND LAYOUT

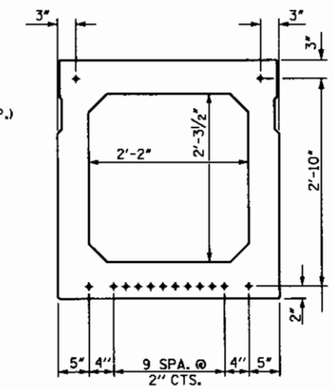

TYPICAL STRAND LOCATION

(14 STRANDS REQUIRED)

(INTERIOR BOX BEAM SECTION SHOWN-EXTERIOR SECTION SIMILAR EXCEPT SHEAR KEY LOCATION)

DEBONDING LEGEND

● FULLY BONDED STRANDS

GRADE 270 STRANDS	
	0.6"Ø L.R.
AREA (SQUARE INCHES)	0.217
ULTIMATE STRENGTH (LBS. PER STRAND)	58,600
APPLIED PRESTRESS (LBS. PER STRAND)	43,950

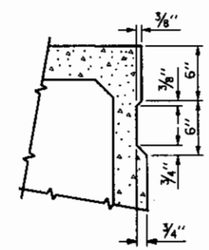

SHEAR KEY DETAIL

NOTE: OMIT SHEAR KEY ON OUTSIDE FACE OF EXTERIOR BOX BEAMS.

BAR TYPES

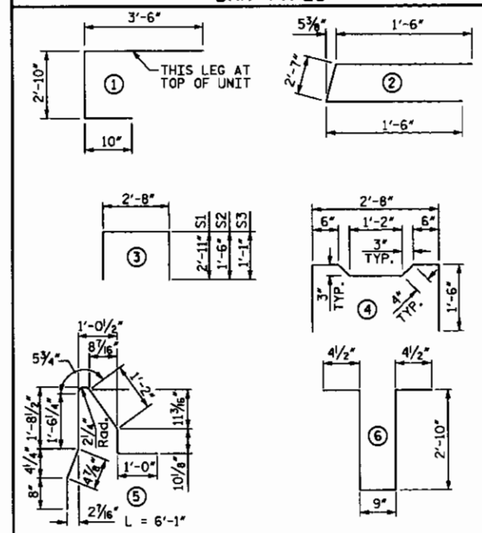

ALL BAR DIMENSIONS ARE OUT TO OUT

BILL OF MATERIAL FOR ONE BOX BEAM SECTION

BAR	NUMBER	SIZE	TYPE	EXTERIOR UNIT LENGTH	EXTERIOR UNIT WEIGHT	INTERIOR UNIT LENGTH	INTERIOR UNIT WEIGHT
A1	10	#5	1	7'-2"	75	7'-2"	75
A2	38	#4	2	5'-7"	142	5'-7"	142
B3	12	#5	STR	33'-10"	423	33'-10"	423
K1	12	#4	6	7'-2"	57	7'-2"	57
K2	8	#4	STR	2'-7"	14	2'-7"	14
S1	56	#4	3	8'-6"	318	8'-6"	318
S2	56	#4	3	5'-8"	212	5'-8"	212
S3	93	#4	3	4'-10"	300	4'-10"	300
S4	37	#4	4	5'-10"	144	5'-10"	144
* S5	86	#5	5	6'-1"	546	--	--
REINFORCING STEEL					1685 LBS.		1685 LBS.
* EPOXY COATED REINF. STEEL					546 LBS.		
5000 P.S.I. CONCRETE					13.0 CU. YDS.		13.0 CU. YDS.
0.6"Ø L.R. STRANDS					No. 14		No. 14

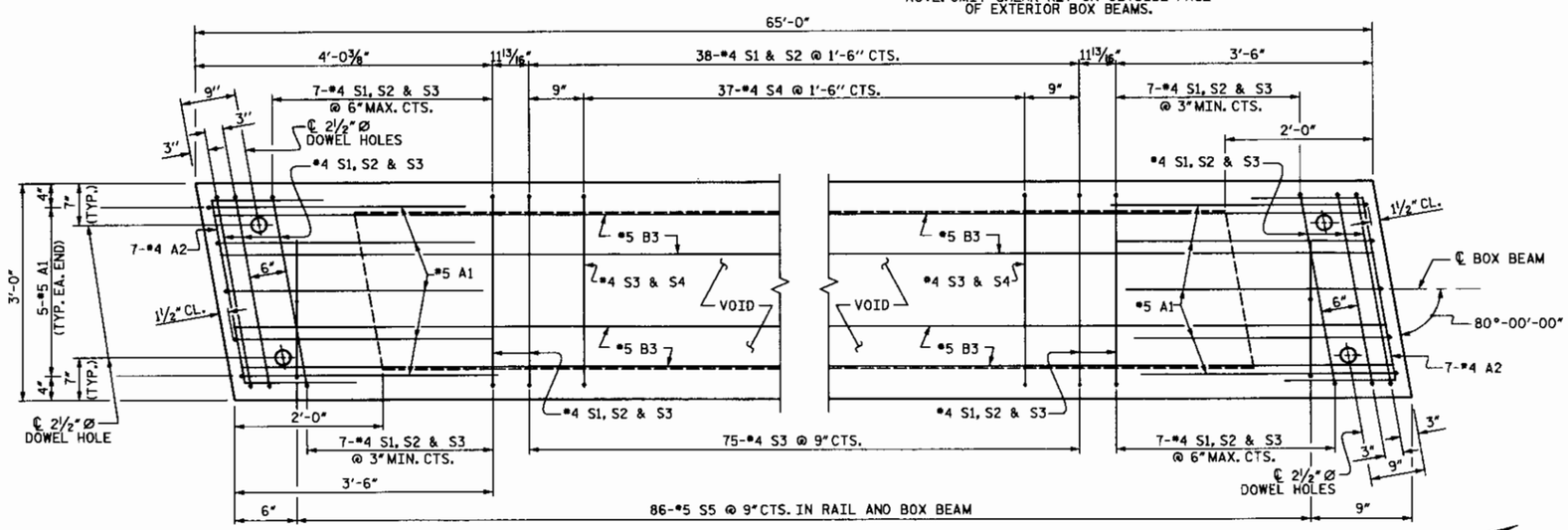

PLAN OF BOX BEAM

EXTERIOR UNIT SHOWN, INTERIOR UNIT SIMILAR EXCEPT OMIT #5 S5 BARS.
FOR LOCATION OF DIAPHRAGMS, SEE PLAN OF SPANS.
FOR REINFORCING STEEL IN DIAPHRAGMS, SEE DIAPHRAGM DETAILS.

NORTH CAROLINA PROFESSIONAL SEAL 22072 ENGINEER JOHN ARTHUR DILWORTH 5-23-11

WBS NO. 42815.1.1

FRANKLIN COUNTY

STATION: 13+69.04

REPLACES BRIDGE NO. 61

SHEET 8 OF 10

STATE OF NORTH CAROLINA
DEPARTMENT OF TRANSPORTATION
RALEIGH

STANDARD
3'-0" X 3'-3"
PRESTRESSED CONCRETE
BOX BEAM UNIT
SPAN "D"

STD. NO. PCBB6

REVISIONS						SHEET NO.
NO.	BY:	DATE:	NO.	BY:	DATE:	S-10
1			3			TOTAL SHEETS
2			4			25

WETHERILL ENGINEERING
559 Jones Franklin Rd. Suite 164
Raleigh, N.C. 27606
Bus: 919 851 8077
Fax: 919 851 8107
LICENSE NO. F-0377

TRANSPORTATION PLANNING/DESIGN - BRIDGE/STRUCTURE DESIGN
CIVIL/SITE DESIGN - GIS/GPS - CONSTRUCTION OBSERVATION

DRAWN BY: J.C. PENDERGRAFT DATE: 4/11
CHECKED BY: J.A. DILWORTH DATE: 4/11

P:\410DWA050048\STRUCTURE\DGN\pcbb6(span0).dgn
5/23/2011 13:53 PW

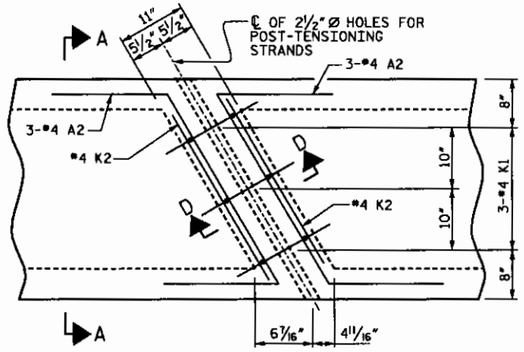

PLAN

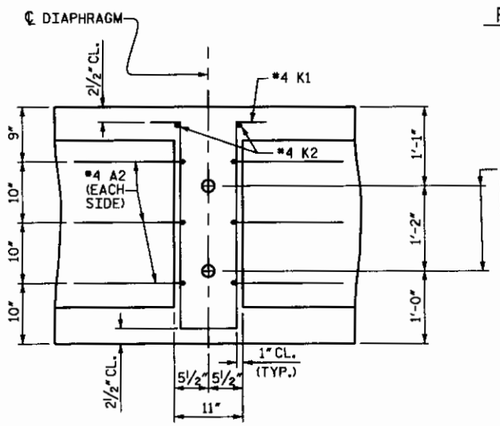

SECTION D-D

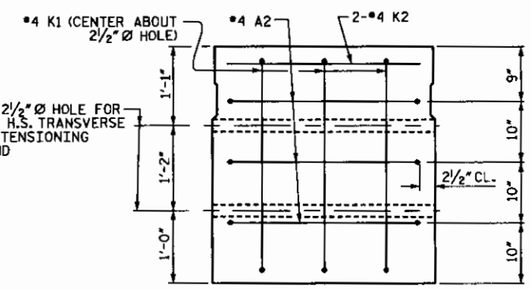

SECTION A-A
VOIDS NOT SHOWN

DOUBLE DIAPHRAGM DETAILS

#4 "S" BARS NOT SHOWN. #4 "S" BARS MAY BE SHIFTED SLIGHTLY TO CLEAR 2" Ø HOLE.

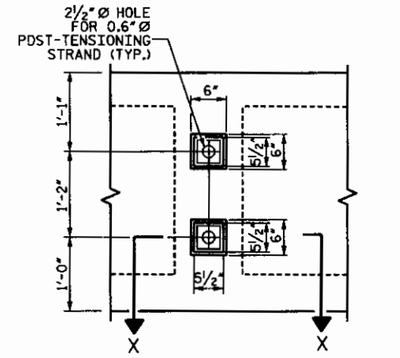

VIEW Y-Y
SHOWING ELEVATION VIEW OF GROUTED RECESS

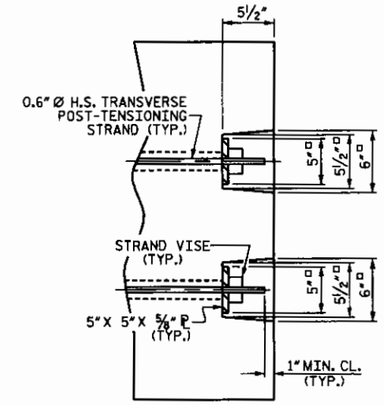

DETAIL "C"

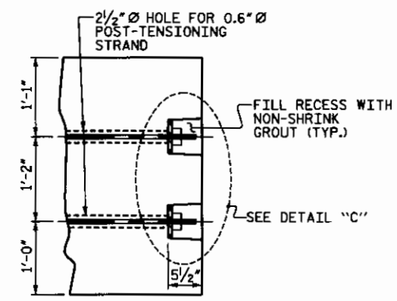

PART SECTION AT RECESS

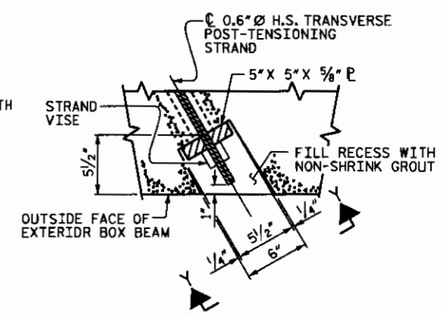

SECTION X-X

GROUTED RECESS DETAIL AT END OF POST-TENSIONED STRANDS OF EXTERIOR BOX BEAM

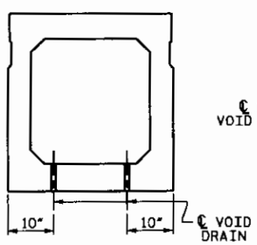

SECTION B-B

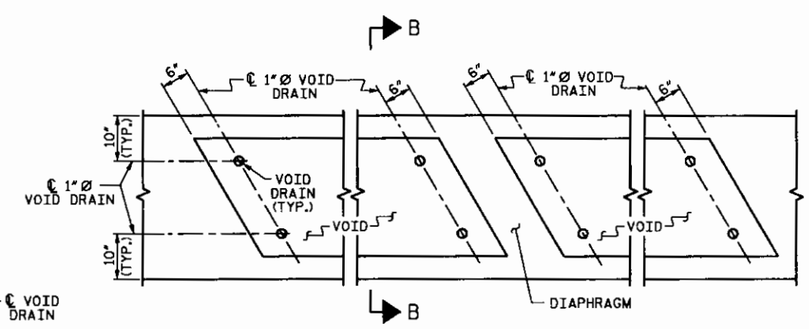

PART PLAN

VOID DRAIN DETAILS

(DIMENSIONS SHOWN ARE TYPICAL FOR EACH VOID)

DEAD LOAD DEFLECTION AND CAMBER				
	3'-0" x 3'-3"			
	0.6"Ø L.R. STRAND			
	SPAN "A"	SPAN "B"	SPAN "C"	SPAN "D"
CAMBER (BEAM ALONE IN PLACE)	5/16" ↑	2¾" ↑	5/16" ↑	13/16" ↑
DEFLECTION DUE TO ASPHALT WEARING SURFACE	1/16" ↓	¾" ↓	1/16" ↓	3/16" ↓
FINAL CAMBER	¼" ↑	2" ↑	¼" ↑	⅝" ↑

WETHERILL ENGINEERING
559 Jones Franklin Rd. Suite 164
Raleigh, N.C. 27606
Bus: 919 851 8077
Fax: 919 851 8107
LICENSE NO. F-0377

TRANSPORTATION PLANNING/DESIGN - BRIDGE/STRUCTURE DESIGN
CIVIL/SITE DESIGN - GIS/GPS - CONSTRUCTION OBSERVATION

NORTH CAROLINA PROFESSIONAL SEAL 22072 ENGINEER JOHN ARTHUR DILWORTH
5-23-11

WBS NO. 42815.1.1
FRANKLIN COUNTY
STATION: 13+69.04
REPLACES BRIDGE NO. 61

SHEET 9 OF 10

STATE OF NORTH CAROLINA
DEPARTMENT OF TRANSPORTATION
RALEIGH

STANDARD
3'-0" X 3'-3"
PRESTRESSED CONCRETE
BOX BEAM UNIT

STD. NO. PCBB7

REVISIONS						SHEET NO.
NO.	BY:	DATE:	NO.	BY:	DATE:	S-11
1			3			TOTAL SHEETS
2			4			25

DRAWN BY : J.C. PENDERGRAFT DATE : 4/11
CHECKED BY : J.A. DILWORTH DATE : 4/11

P:\4100\W405004\BS\STRUCTURE\DGN\pcbb7.dgn
5/23/2011 1:44:37 PM

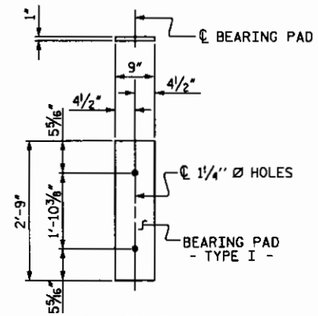

FIXED END
(TYPE I - 88 REQ'D)

ELASTOMERIC BEARING DETAILS

ELASTOMER IN ALL BEARINGS SHALL BE 60 DUROMETER HARDNESS.

BOX BEAM UNITS REQUIRED			
	NUMBER	LENGTH	TOTAL LENGTH
SPAN A	11	50'-0"	550'-0"
SPAN B	11	95'-0"	1045'-0"
SPAN C	11	50'-0"	550'-0"
SPAN D	11	65'-0"	715'-0"
TOTAL	44	———	2860'-0"

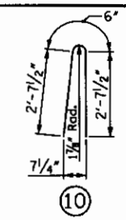

BAR TYPE
BAR DIMENSIONS ARE OUT TO OUT

BILL OF MATERIAL FOR CONCRETE BARRIER RAIL										
BAR	BARS PER SPAN					TOTAL NO.	SIZE	TYPE	LENGTH	WEIGHT
		SPAN A	SPAN B	SPAN C	SPAN D					
*B2		64		64		128	#5	STR	14'-2"	1891
*B3			64		64	128	#5	STR	10'-5"	1391
*B4			32		16	48	#5	STR	29'-7"	1481
*S6		132	252	132	172	688	#5	10	5'-9"	4126
*EPOXY COATED REINFORCING STEEL 8889 LBS.										
CLASS AA CONCRETE 59.1 CU.YDS.										
TOTAL LIN. FT. OF CONCRETE BARRIER RAIL 520 LIN. FT.										

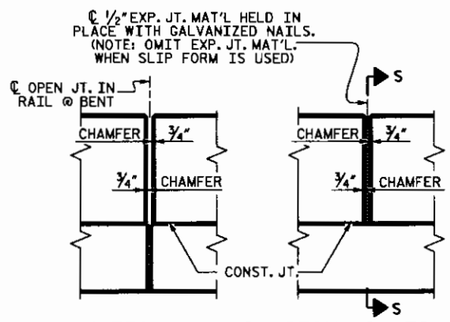

ELEVATION AT EXPANSION JOINTS

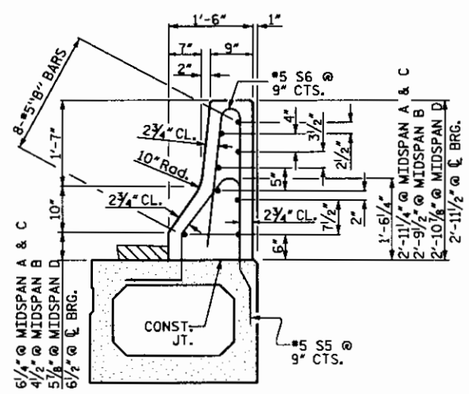

SECTION THRU RAIL

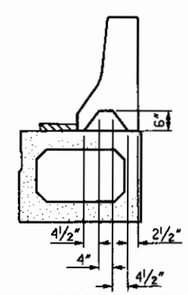

SECTION S-S
AT DAM IN OPEN JOINT
(THIS IS TO BE USED ONLY WHEN SLIP FORM IS USED)

BARRIER RAIL DETAILS

P:\4100MIA050046\STRUCTURE\DGN\pcbb8.dgn
5/23/2011 1:41:45 PM

DRAWN BY : J.C. PENDERGRAFT	DATE : 4/11		
CHECKED BY : J.A. DILWORTH	DATE : 4/11		

WETHERILL ENGINEERING
559 Jones Franklin Rd. Suite 164
Raleigh, N.C. 27606
Bus: 919 851 8077
Fax: 919 851 8107
LICENSE NO. F-0377

TRANSPORTATION PLANNING/DESIGN - BRIDGE/STRUCTURE DESIGN
CIVIL/SITE DESIGN - GIS/GPS - CONSTRUCTION OBSERVATION

NORTH CAROLINA PROFESSIONAL SEAL 22072 ENGINEER JOHN ARTHUR DILWORTH
5-23-11

WBS NO. 42815.1.1
FRANKLIN COUNTY
STATION: 13+69.04
REPLACES BRIDGE NO. 61
SHEET 10 OF 10

STATE OF NORTH CAROLINA
DEPARTMENT OF TRANSPORTATION
RALEIGH

STANDARD
3'-0" X 3'-3"
PRESTRESSED CONCRETE
BOX BEAM UNIT DETAILS

STD. NO. PCBB8

REVISIONS							SHEET NO.
NO.	BY:	DATE:	NO.	BY:	DATE:		S-12
1			3				TOTAL SHEETS
2			4				25

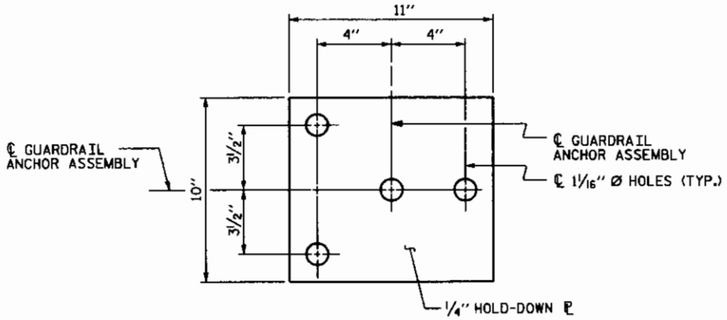

PLAN

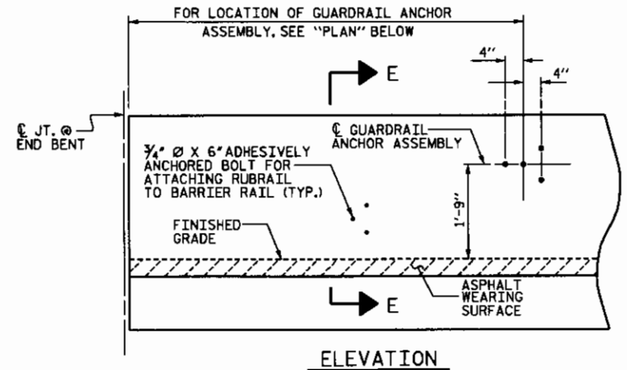

ELEVATION

FOR LOCATION OF RUBRAIL, SEE ROADWAY STD. 862.03

NOTES

THE GUARDRAIL ANCHOR ASSEMBLY SHALL CONSIST OF A 1/4" HOLD DOWN PLATE AND 4 - 7/8" Ø BOLTS WITH NUTS AND WASHERS, RUBRAIL, AND ADHESIVELY ANCHORED BOLTS.

THE HOLD-DOWN PLATE SHALL CONFORM TO AASHTO M270 GRADE 36. AFTER FABRICATION, THE HOLD-DOWN PLATE SHALL BE HOT-DIP GALVANIZED IN ACCORDANCE WITH AASHTO M111.

BOLTS SHALL CONFORM TO THE REQUIREMENTS OF ASTM A307 AND NUTS SHALL CONFORM TO THE REQUIREMENTS OF AASHTO M291. BOLTS, NUTS AND WASHERS SHALL BE GALVANIZED. (AT THE CONTRACTOR'S OPTION, STAINLESS STEEL BOLTS, NUTS AND WASHERS MAY BE USED AS AN ALTERNATE FOR THE 7/8" Ø GALVANIZED BOLTS, NUTS AND WASHERS. THEY SHALL CONFORM TO OR EXCEED THE MECHANICAL REQUIREMENTS OF ASTM A307. THE USE OF THIS ALTERNATE SHALL BE APPROVED BY THE ENGINEER.)

THE GUARDRAIL ANCHOR ASSEMBLY IS REQUIRED AT ALL POINTS WHERE APPROACH GUARDRAIL IS TO BE ATTACHED TO THE END OF BARRIER RAIL. FOR POINTS OF ATTACHMENT, SEE SKETCH.

AFTER INSTALLATION, THE EXPOSEO THREAD OF THE BOLT SHALL BE BURRED WITH A SHARP POINTED TOOL.

THE COST OF THE GUARDRAIL ANCHOR ASSEMBLY SHALL BE INCLUDED IN THE UNIT CONTRACT PRICE BID FOR CONCRETE BARRIER RAIL.

THE 1 1/4" Ø HOLES SHALL BE FORMED OR DRILLED WITH A CORE BIT. IMPACT TOOLS WILL NOT BE PERMITTED. ANY CONCRETE DAMAGED BY THIS WORK SHALL BE REPAIRED TO THE SATISFACTION OF THE ENGINEER.

THE C6 X 8.2 RUBRAIL IS TO BE ADHESIVELY ANCHORED TO THE RAIL USING THREE 3/4" Ø X 6" BOLTS WITH WASHERS. LEVEL ONE FIELD TESTING IS REQUIRED, AND THE YIELD LOAD OF THE 3/4" Ø BOLT IS 12 KIPS. FOR ADHESIVELY ANCHORED ANCHOR BOLTS OR DOWELS, SEE SPECIAL PROVISIONS. SEE ROADWAY STANDARD 862.03 FOR DETAILS AND LOCATION OF THE RUBRAIL.

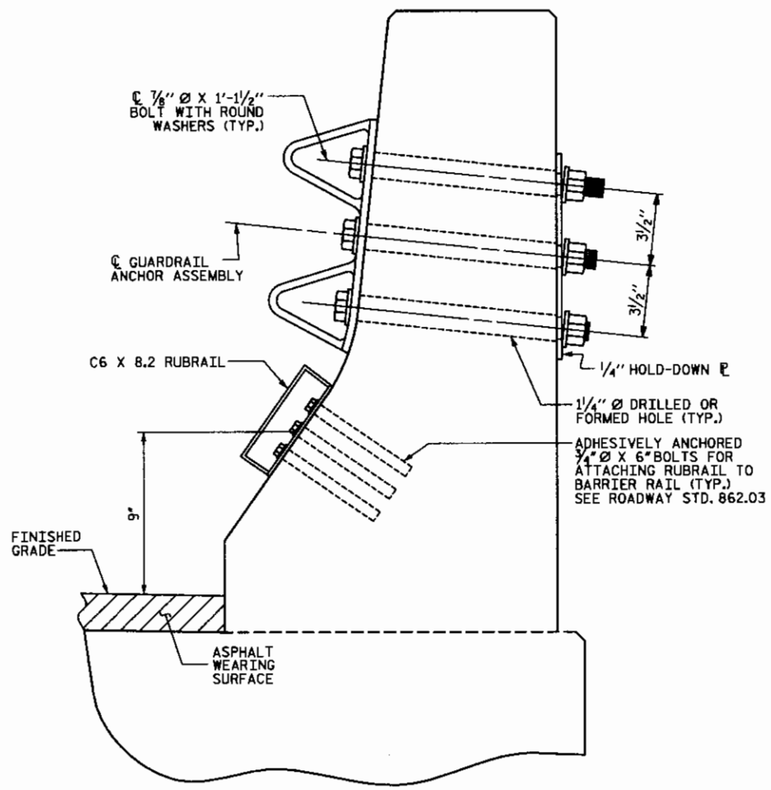

SECTION E-E

GUARDRAIL ANCHOR ASSEMBLY DETAILS

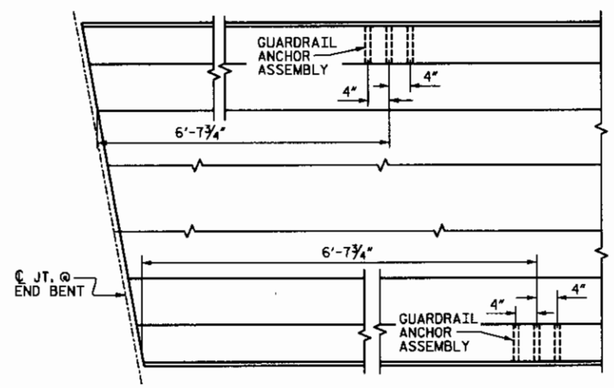

PLAN

LOCATION OF ANCHORS FOR GUARDRAIL

END BENT #1 SHOWN, ENO BENT #2 SIMILAR.

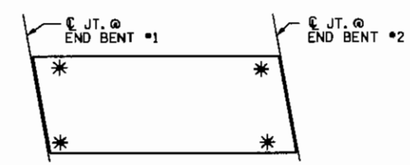

SKETCH SHOWING POINTS OF ATTACHMENTS

✱ DENOTES GUARDRAIL ANCHOR ASSEMBLY

NORTH CAROLINA PROFESSIONAL SEAL 22072 ENGINEER JOHN ARTHUR DILWORTH 5-23-11

WBS NO. 42815.1.1

FRANKLIN COUNTY

STATION: 13+69.04

REPLACES BRIDGE NO. 61

STATE OF NORTH CAROLINA
DEPARTMENT OF TRANSPORTATION
RALEIGH

STANDARD

GUARDRAIL ANCHORAGE FOR BARRIER RAIL

ETHERILL ENGINEERING
559 Jones Franklin Rd. Suite 164
Raleigh, N.C. 27606
Bus: 919 851 8077
Fax: 919 851 8107
LICENSE NO. F-0377

TRANSPORTATION PLANNING/DESIGN - BRIDGE/STRUCTURE DESIGN
CIVIL/SITE DESIGN - GIS/GPS - CONSTRUCTION OBSERVATION

STD. NO. GRA2

REVISIONS						SHEET NO.
NO.	BY:	DATE:	NO.	BY:	DATE:	S-13
1			3			TOTAL SHEETS
2			4			25

DRAWN BY : J.C. PENDERGRAFT DATE : 4/11
CHECKED BY : J.A. DILWORTH DATE : 4/11

P:\41001\ADSDOWR\STRUCTURE\DGN\GRA2.dgn
5/23/2011 1:47:35 PM

NOTES:

STIRRUPS IN CAP MAY BE SHIFTED AS NECESSARY TO CLEAR DOWELS.

FOR SECTION A-A, SEE SHEET 2 OF 3.

FOR MISC. DETAILS, SEE SHEET 2 OF 3.

THE CONCRETE IN THE SHADED AREA OF THE WINGS SHALL BE POURED AFTER THE BARRIER RAIL IS CAST IF SLIP FORMING IS USED.

THE LATERAL GUIDE AT EACH END OF THE CAP IS NOT TO BE POURED UNTIL AFTER THE BOX BEAM UNITS ARE IN PLACE.

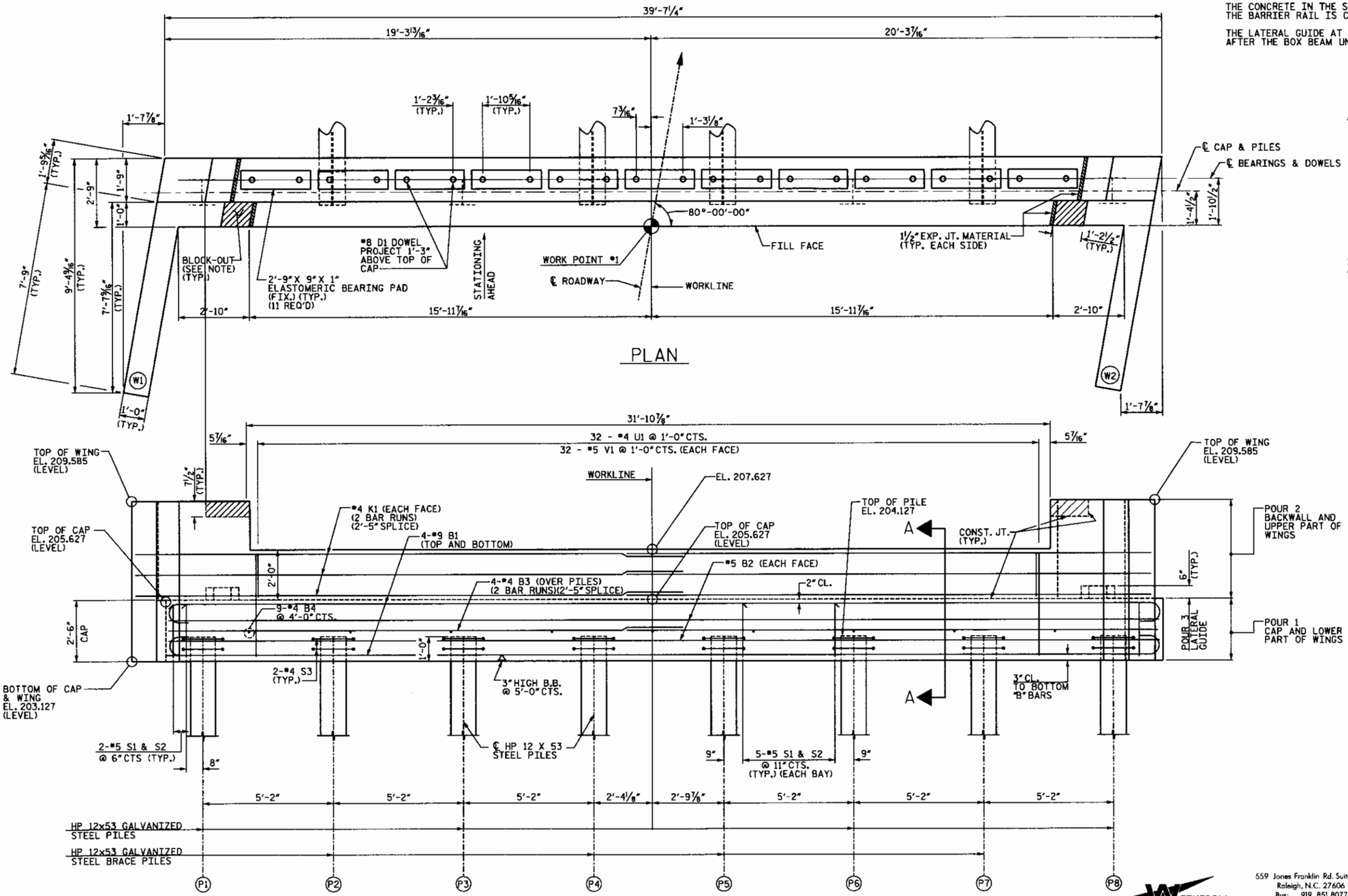

ELEVATION

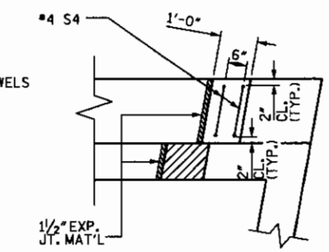

PLAN

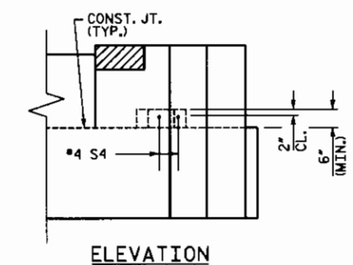

ELEVATION

LATERAL GUIDE DETAILS

(TYP. EACH LATERAL GUIDE)

NORTH CAROLINA PROFESSIONAL SEAL 22072 ENGINEER JOHN ARTHUR DILWORTH 5-23-11

WBS NO. 42815.1.1

FRANKLIN COUNTY

STATION: 13+69.04

REPLACES BRIDGE NO. 61

SHEET 1 OF 3

STATE OF NORTH CAROLINA
DEPARTMENT OF TRANSPORTATION
RALEIGH

SUBSTRUCTURE
END BENT 1

REVISIONS								SHEET NO.
NO.	BY:	DATE:		NO.	BY:	DATE:		S-14
1				3				TOTAL SHEETS
2				4				25

WETHERILL ENGINEERING
559 Jones Franklin Rd. Suite 164
Raleigh, N.C. 27606
Bus: 919 851 8077
Fax: 919 851 8107
LICENSE NO. F-0377

TRANSPORTATION PLANNING/DESIGN - BRIDGE/STRUCTURE DESIGN
CIVIL/SITE DESIGN - GIS/GPS - CONSTRUCTION OBSERVATION

DRAWN BY : J.C. PENDERGRAFT DATE : 4/11
CHECKED BY : J.A. DILWORTH DATE : 4/11

P:\41001\NO\50049\STRUCTURE\DGN\End Bent.dgn
5/23/2011 1:55:24 PM

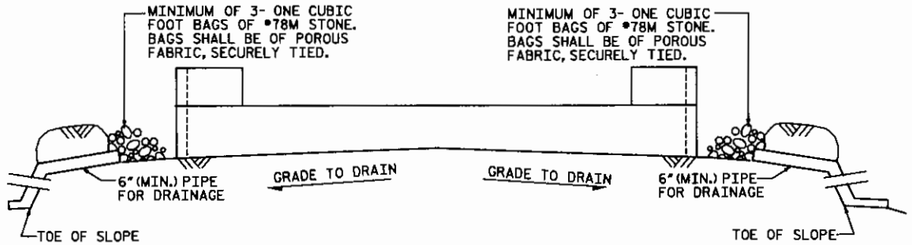

BAGGED STONE AND PIPE SHALL BE PLACED IMMEDIATELY AFTER COMPLETION OF END BENT EXCAVATION. PIPE MAY BE EITHER CONCRETE, CORRUGATED STEEL, CORRUGATED ALUMINUM ALLOY, OR CORRUGATED PLASTIC. PERFORATED PIPE WILL NOT BE ALLOWED.

BAGGED STONE SHALL REMAIN IN PLACE UNTIL THE ENGINEER DIRECTS THAT IT BE REMOVED. THE CONTRACTOR SHALL REMOVE AND DISPOSE OF SILT ACCUMULATIONS AT BAGGED STONE WHEN SO DIRECTED BY THE ENGINEER. BAGS SHALL BE REMOVED AND REPLACED WHENEVER THE ENGINEER DETERMINES THAT THEY HAVE DETERIORATED AND LOST THEIR EFFECTIVENESS.

NO SEPARATE PAYMENT WILL BE MADE FOR THIS WORK AND THE ENTIRE COST OF THIS WORK SHALL BE INCLUDED IN THE UNIT CONTRACT PRICE BID FOR THE SEVERAL PAY ITEMS.

TEMPORARY DRAINAGE AT END BENT

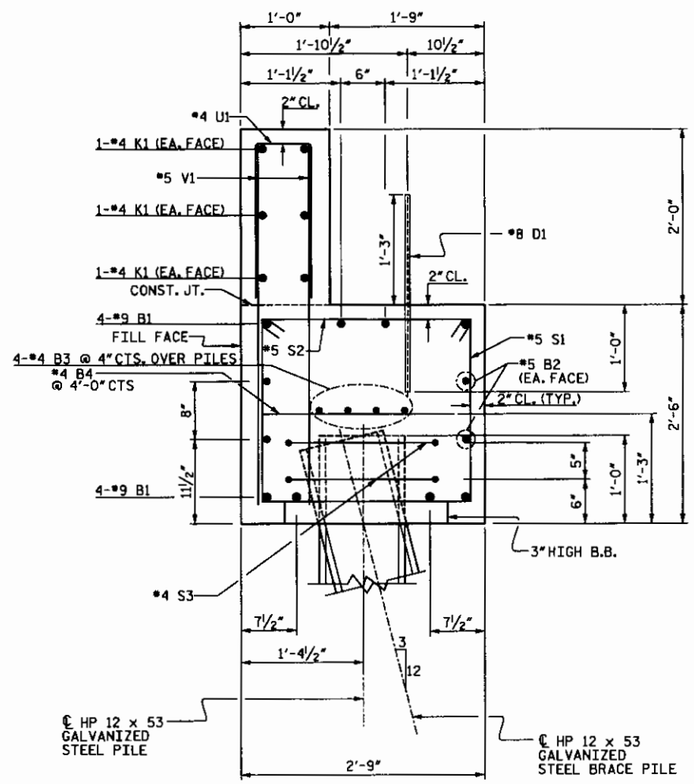

SECTION A-A

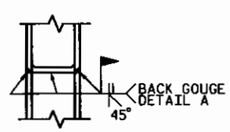

*PILE VERTICAL

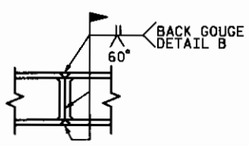

*PILE HORIZONTAL OR VERTICAL

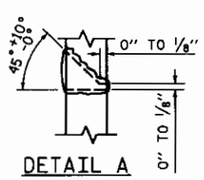

DETAIL A

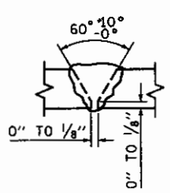

DETAIL B

*POSITION OF PILE DURING WELDING.

PILE SPLICE DETAILS

WBS NO. 42815.1.1

FRANKLIN COUNTY

STATION: 13+69.04

REPLACES BRIDGE NO. 61

SHEET 2 OF 3

STATE OF NORTH CAROLINA
DEPARTMENT OF TRANSPORTATION
RALEIGH

SUBSTRUCTURE
END BENT 1

WETHERILL ENGINEERING
559 Jones Franklin Rd. Suite 164
Raleigh, N.C. 27606
Bus: 919 851 8077
Fax: 919 851 8107
LICENSE NO. F-0377

TRANSPORTATION PLANNING/DESIGN - BRIDGE/STRUCTURE DESIGN
CIVIL/SITE DESIGN - GIS/GPS - CONSTRUCTION OBSERVATION

REVISIONS								SHEET NO.
NO.	BY:	DATE:	NO.	BY:	DATE:			S-15
1			3					TOTAL SHEETS
2			4					25

DRAWN BY : J.C. PENDERGRAFT DATE : 4/11
CHECKED BY : J.A. DILWORTH DATE : 4/11

P:\4100\MA0500\HB\STRUCTURE\DGN\End Bents.dgn
5/23/2011 1:55:32 PM

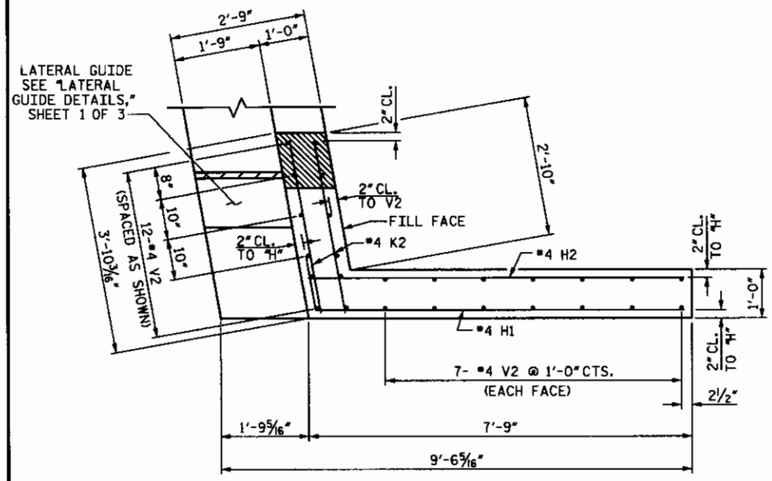

PLAN OF WING (W1)

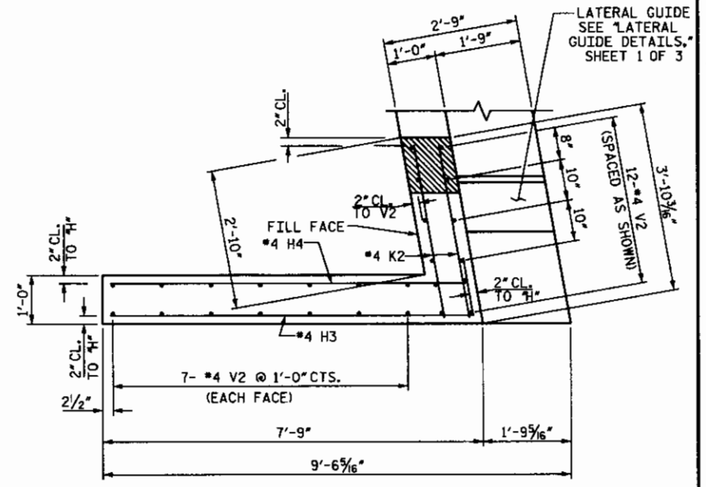

PLAN OF WING (W2)

BAR TYPES

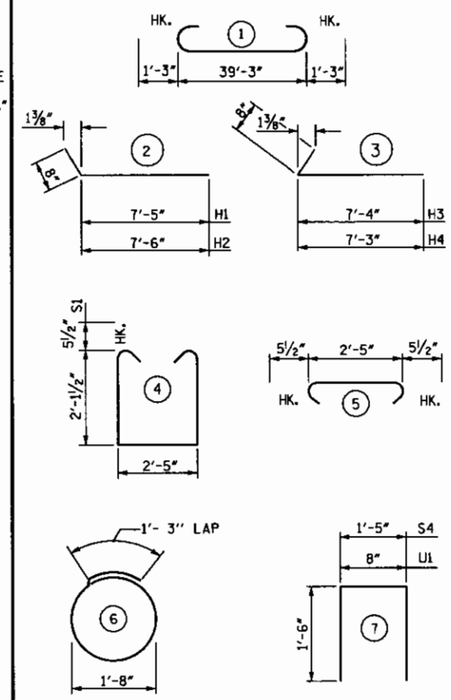

(ALL BAR DIMENSIONS ARE OUT TO OUT.)

BILL OF MATERIAL

END BENT 1

BAR	NO.	SIZE	TYPE	LENGTH	WEIGHT
B1	8	#9	1	41'-9"	1136
B2	4	#5	STR	39'-3"	164
B3	8	#4	STR	20'-11"	112
B4	9	#4	STR	2'-5"	15
D1	22	#8	STR	2'-3"	132
H1	8	#4	2	8'-1"	43
H2	8	#4	2	8'-2"	44
H3	8	#4	3	8'-0"	43
H4	8	#4	3	7'-11"	42
K1	12	#4	STR.	20'-11"	168
K2	8	#4	STR.	3'-6"	19
S1	39	#5	4	7'-7"	308
S2	39	#5	5	3'-4"	136
S3	16	#4	6	6'-6"	69
S4	4	#4	7	4'-5"	12
U1	32	#4	7	3'-8"	78
V1	64	#5	STR	4'-1"	273
V2	52	#4	STR	6'-1"	211

REINFORCING STEEL = 3005 LBS.

CLASS A CONCRETE

POUR 1
CAP & LOWER WINGS 11.3 C.Y.

POUR 2
BACKWALL & UPPER WINGS 5.5 C.Y.

POUR 3
LATERAL GUIDES 0.1 C.Y.

TOTAL 16.9 C.Y.

HP 12 X 53 GALVANIZED STEEL PILES
NO. = 8 180 LIN. FT.

STEEL PILE POINTS
NO. = 8

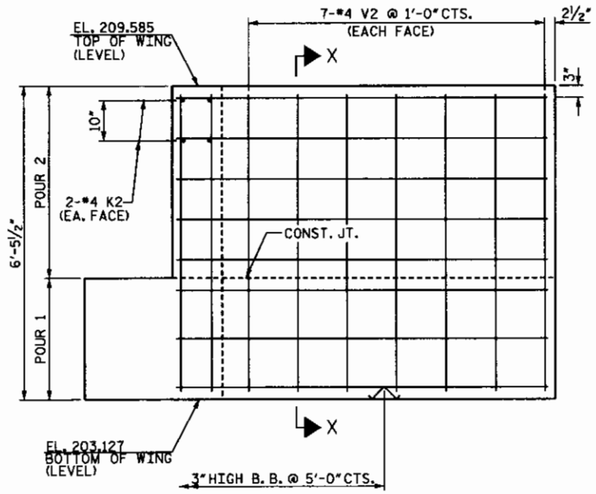

ELEVATION OF WING (W1)

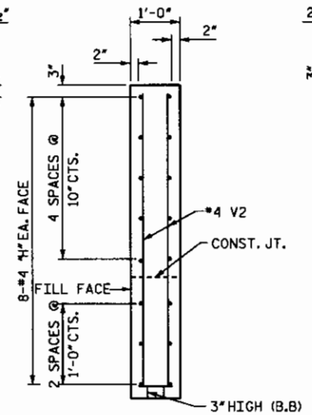

SECTION X-X

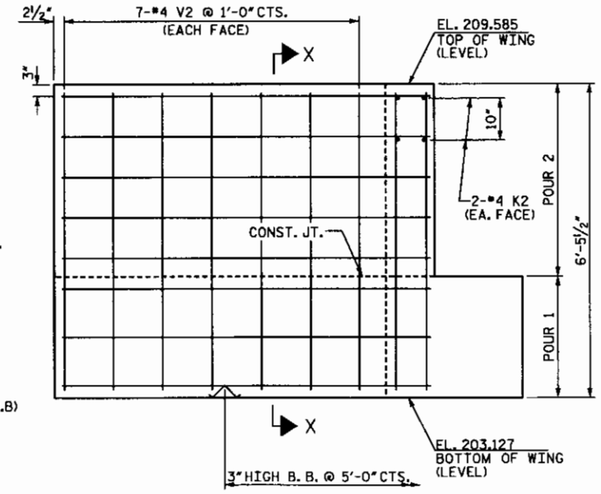

ELEVATION OF WING (W2)

NORTH CAROLINA PROFESSIONAL SEAL 22072 ENGINEER JOHN ARTHUR DILWORTH
5-23-11

WBS NO. 42815.1.1

FRANKLIN COUNTY

STATION: 13+69.04

REPLACES BRIDGE NO. 61

SHEET 3 OF 3

STATE OF NORTH CAROLINA
DEPARTMENT OF TRANSPORTATION
RALEIGH

SUBSTRUCTURE
END BENT 1

ETHERILL ENGINEERING
559 Jones Franklin Rd. Suite 164
Raleigh, N.C. 27606
Bus: 919 851 8077
Fax: 919 851 8107
LICENSE NO. F-0377

TRANSPORTATION PLANNING/DESIGN - BRIDGE/STRUCTURE DESIGN
CIVIL/SITE DESIGN - GIS/GPS - CONSTRUCTION OBSERVATION

REVISIONS						SHEET NO.
NO.	BY:	DATE:	NO.	BY:	DATE:	S-16
1			3			TOTAL SHEETS
2			4			25

DRAWN BY : J.C. PENDERGRAFT DATE : 4/11
CHECKED BY : J.A. DILWORTH DATE : 4/11

P:\41001\M40500\B\STRUCTURE\DGN\End Bents.dgn
5/23/2011 1:56:12 PM

NOTES

STIRRUPS IN CAP MAY BE SHIFTED AS NECESSARY TO CLEAR DOWELS.

HOOKS ON "M" BARS MAY BE TURNED AS NECESSARY FOR PLACING REINFORCING STEEL.

ALL STEEL IN THE DRILLED PIERS IS INCLUDED IN THE PAY ITEM FOR "PLACEMENT OF SUBSTRUCTURE."

FOR DRILLED PIERS, SEE SPECIAL PROVISIONS.

INVERT ALTERNATE STIRRUPS.

THE LATERAL GUIDE AT EACH END OF THE CAP SHALL NOT BE POURED UNTIL AFTER THE BOX BEAM UNITS ARE PLACED.

THE CONTRACTOR'S ATTENTION IS CALLED TO THE FACT THE LONGITUDINAL REINFORCEMENT FOR THE DRILLED PIERS IS DETAILED WITH 3 FEET OF EXTRA LENGTH.

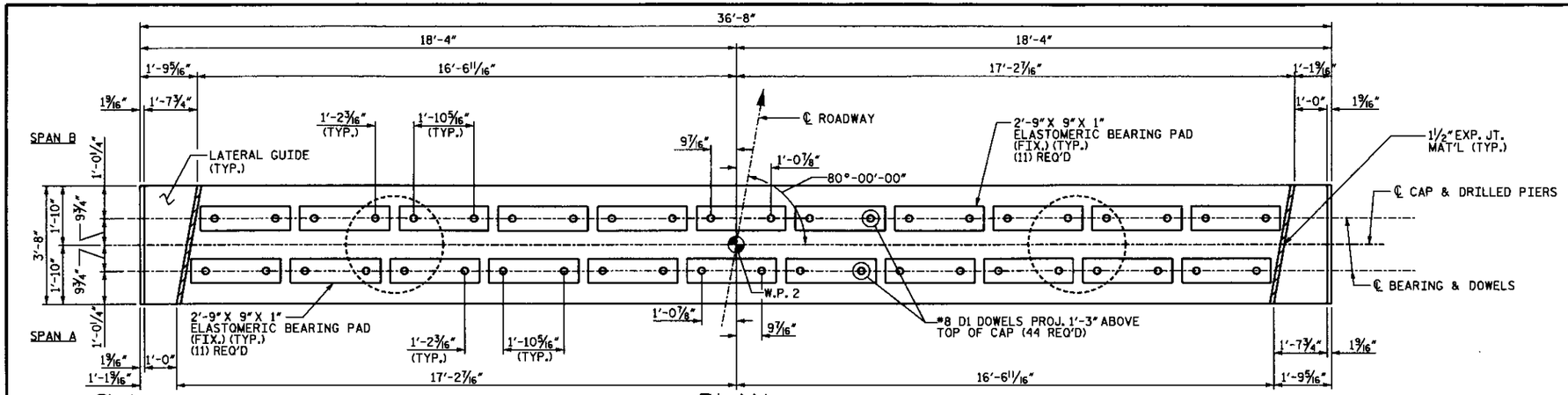

PLAN

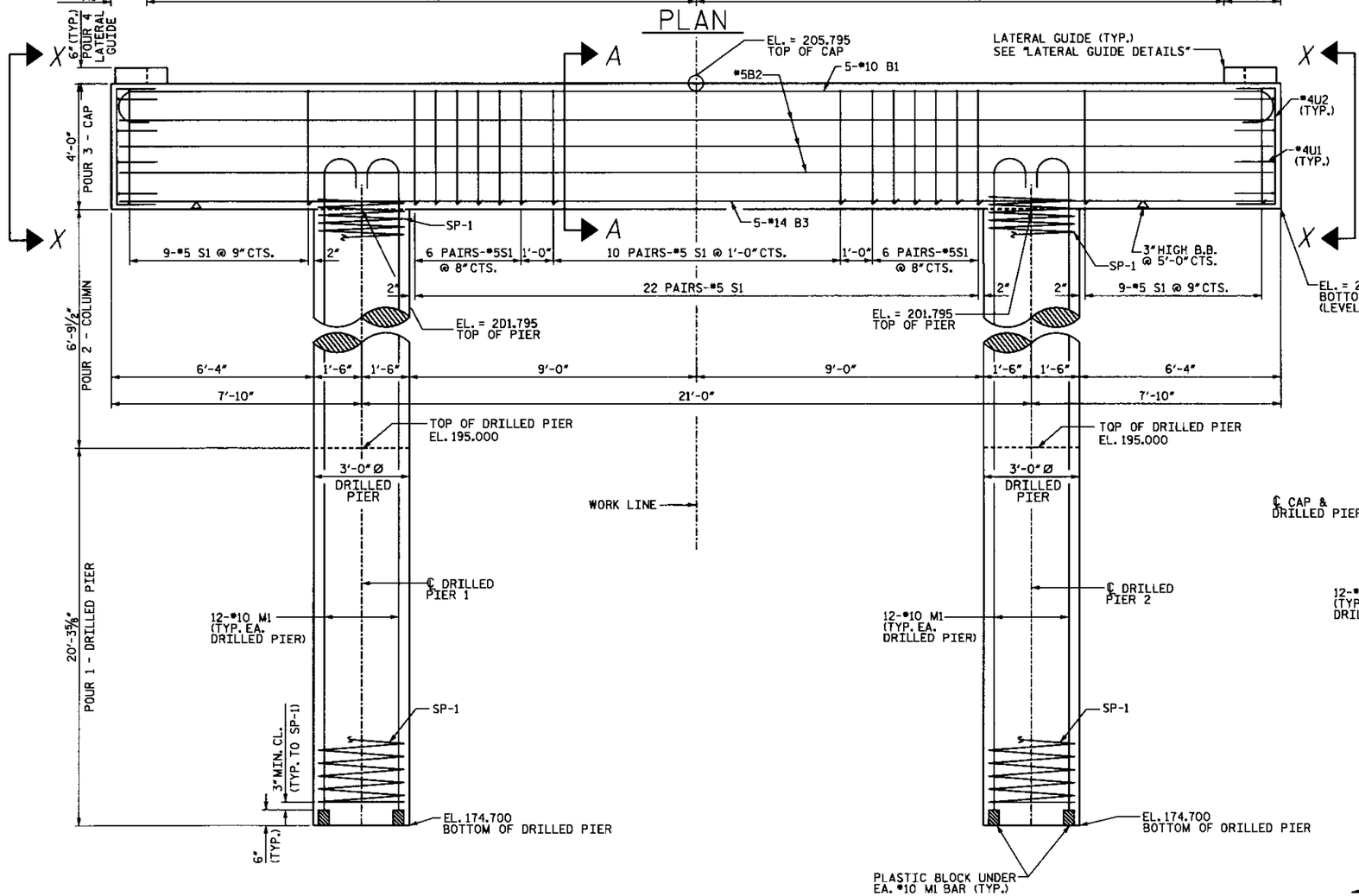

ELEVATION

REINFORCING STEEL AND DIMENSIONS TYPICAL FOR ALL DRILLED PIERS

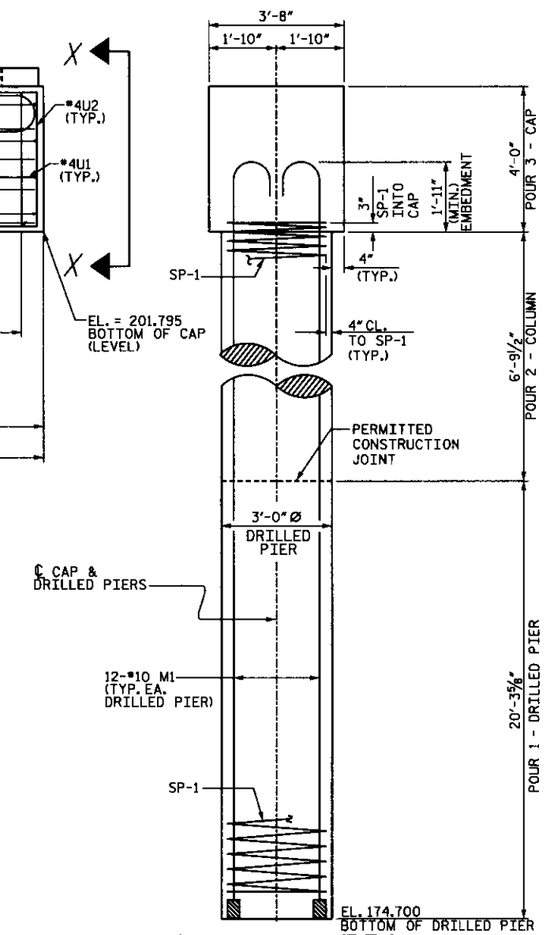

END ELEVATION

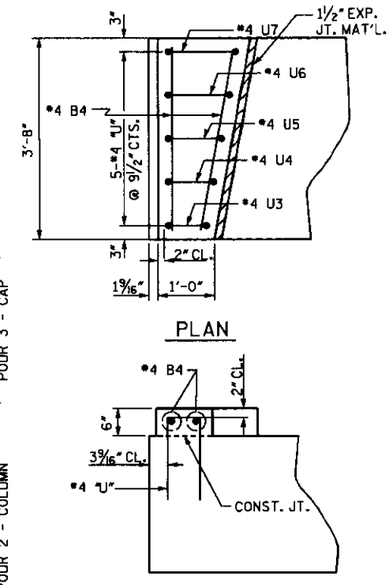

LATERAL GUIDE DETAIL

(EACH END SIMILAR)

NORTH CAROLINA PROFESSIONAL SEAL 22072 ENGINEER JOHN ARTHUR DILWORTH

5/23/11

WBS NO. 42815.1.1

FRANKLIN COUNTY

STATION: 13+69.04

REPLACES BRIDGE NO. 61

SHEET 1 OF 2

STATE OF NORTH CAROLINA
DEPARTMENT OF TRANSPORTATION
RALEIGH

SUBSTRUCTURE
BENT 1

WETHERILL ENGINEERING
559 Jones Franklin Rd. Suite 164
Raleigh, N.C. 27606
Bus: 919 851 8077
Fax: 919 851 8107
LICENSE NO. F-0377

TRANSPORTATION PLANNING/DESIGN - BRIDGE/STRUCTURE DESIGN
CIVIL/SITE DESIGN - GIS/GPS - CONSTRUCTION OBSERVATION

REVISIONS								SHEET NO.
NO.	BY:	DATE:	NO.	BY:	DATE:	NO.	BY:	DATE:	S-17
1			3					TOTAL SHEETS
2			4					25

DRAWN BY : J.C. PENDERGRAFT DATE : 4/11
CHECKED BY : J.A. DILWORTH DATE : 4/11

P:\4100\M\A050048\STRUCTURE\DGN\Bents.dgn
5/23/2011 2:00:18 PM

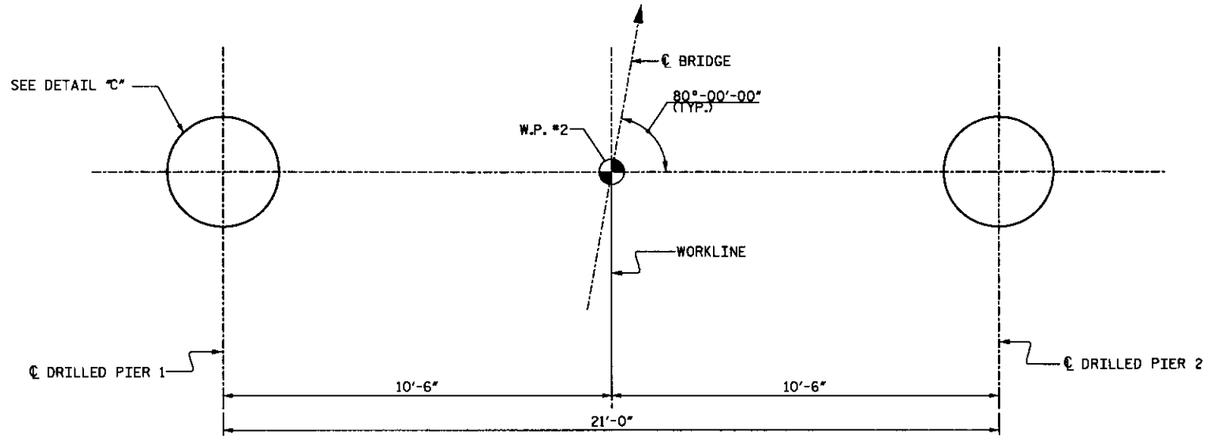

PLAN OF DRILLED PIERS

REINFORCING STEEL AND DIMENSIONS ARE TYPICAL FOR ALL DRILLED PIERS

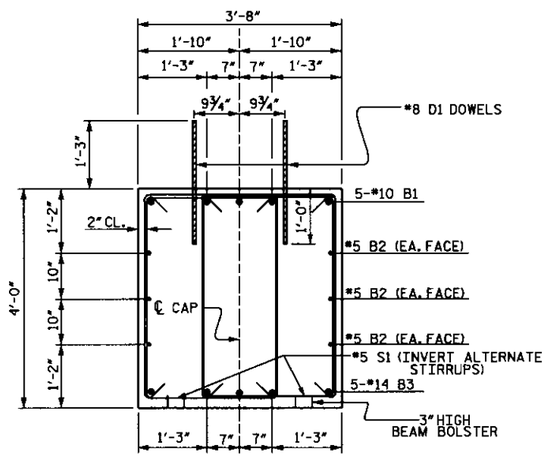

SECTION A-A

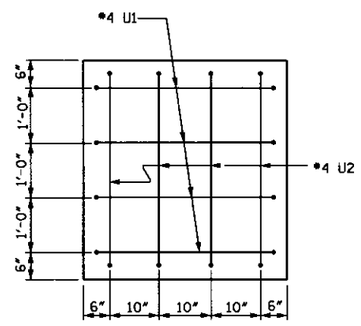

SECTION X-X

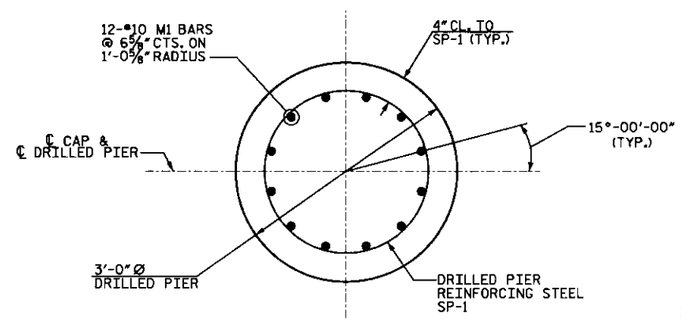

DETAIL "C"

BAR TYPES

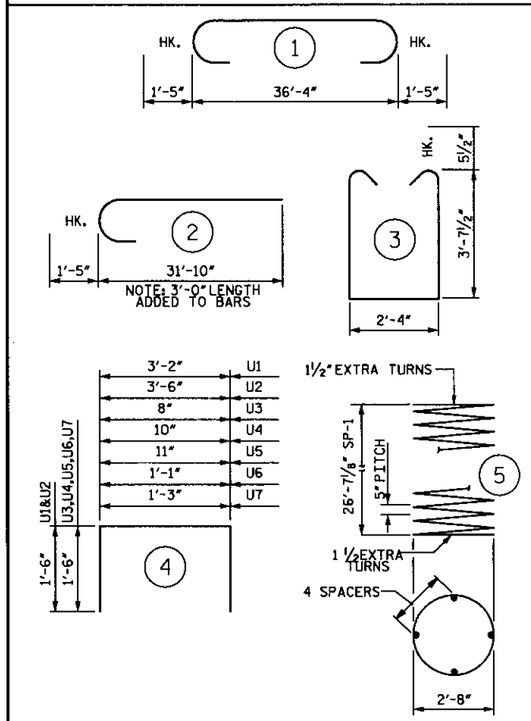

(ALL BAR DIMENSIONS ARE OUT TO OUT.)

* THE SP-1 SPIRAL REINFORCING STEEL SHALL BE W31 OR D-31 COLD DRAWN WIRE OR #5 PLAIN OR DEFORMED BAR.

BILL OF MATERIAL

BENT 1

BAR	NO.	SIZE	TYPE	LENGTH	WEIGHT
B1	5	#10	1	39'-2"	843
B2	6	#5	STR	36'-4"	227
B3	5	#14	STR	36'-4"	1390
B4	4	#4	STR	3'-4"	9
D1	44	#8	STR	2'-3"	264
M1	24	#10	2	33'-3"	3434
S1	62	#5	3	10'-6"	679
U1	8	#4	4	6'-2"	33
U2	8	#4	4	6'-6"	35
U3	2	#4	4	3'-8"	5
U4	2	#4	4	3'-10"	5
U5	2	#4	4	3'-11"	5
U6	2	#4	4	4'-1"	5
U7	2	#4	4	4'-3"	6
REINFORCING STEEL					6940 LBS.

SPIRAL COLUMN REINFORCING STEEL

SP-1	2	*	5	479'-10"	1001
SPIRAL REINFORCING STEEL					1001 LBS.

CLASS A CONCRETE BREAKDOWN

POUR 2 (COLUMNS)	3.6 C.Y.
POUR 3 (CAP)	19.9 C.Y.
POUR 4 (LATERAL GUIDE)	0.2 C.Y.
TOTAL CLASS A CONCRETE	23.7 C.Y.

3'-0"Ø DRILLED PIERS

DRILLED PIER CONCRETE

POUR 1 (DRILLED PIERS)	10.6 C.Y.
3'-0"Ø DRILLED PIERS IN SOIL :	30.4 LIN. FT.
3'-0"Ø DRILLED PIERS NOT IN SOIL :	10.2 LIN. FT.
3'-0"Ø PERMANENT STEEL CASING:	27.7 LIN. FT.

NORTH CAROLINA PROFESSIONAL SEAL 22072 ENGINEER JOHN ARTHUR DILWORTH
5-23-11

WBS NO. 42815.1.1

FRANKLIN COUNTY

STATION: 13+69.04

REPLACES BRIDGE NO. 61

SHEET 2 OF 2

STATE OF NORTH CAROLINA
DEPARTMENT OF TRANSPORTATION
RALEIGH

SUBSTRUCTURE
BENT 1

ETHERILL ENGINEERING
559 Jones Franklin Rd. Suite 164
Raleigh, N.C. 27606
Bus: 919 851 8077
Fax: 919 851 8107
LICENSE NO. F-0377

TRANSPORTATION PLANNING/DESIGN - BRIDGE/STRUCTURE DESIGN
CIVIL/SITE DESIGN - GIS/GPS - CONSTRUCTION OBSERVATION

REVISIONS						SHEET NO.
NO.	BY:	DATE:	NO.	BY:	DATE:	S-18
1			3			TOTAL SHEETS
2			4			25

DRAWN BY : J.C. PENDERGRAFT DATE : 4/11
CHECKED BY : J.A. DILWORTH DATE : 4/11

P:\410\WA050048\STRUCTURE\DGN\Bents.dgn
5/23/2011 2:00:34 PM

NOTES

STIRRUPS IN CAP MAY BE SHIFTED AS NECESSARY TO CLEAR DOWELS.

HOOKS ON "M" BARS MAY BE TURNED AS NECESSARY FOR PLACING REINFORCING STEEL.

ALL STEEL IN THE DRILLED PIERS IS INCLUDED IN THE PAY ITEM FOR "PLACEMENT OF SUBSTRUCTURE."

FOR DRILLED PIERS, SEE SPECIAL PROVISIONS.

INVERT ALTERNATE STIRRUPS.

THE LATERAL GUIDE AT EACH END OF THE CAP SHALL NOT BE POURED UNTIL AFTER THE BOX BEAM UNITS ARE PLACED.

THE CONTRACTOR'S ATTENTION IS CALLED TO THE FACT THE LONGITUDINAL REINFORCEMENT FOR THE DRILLED PIERS IS DETAILED WITH 3 FEET OF EXTRA LENGTH.

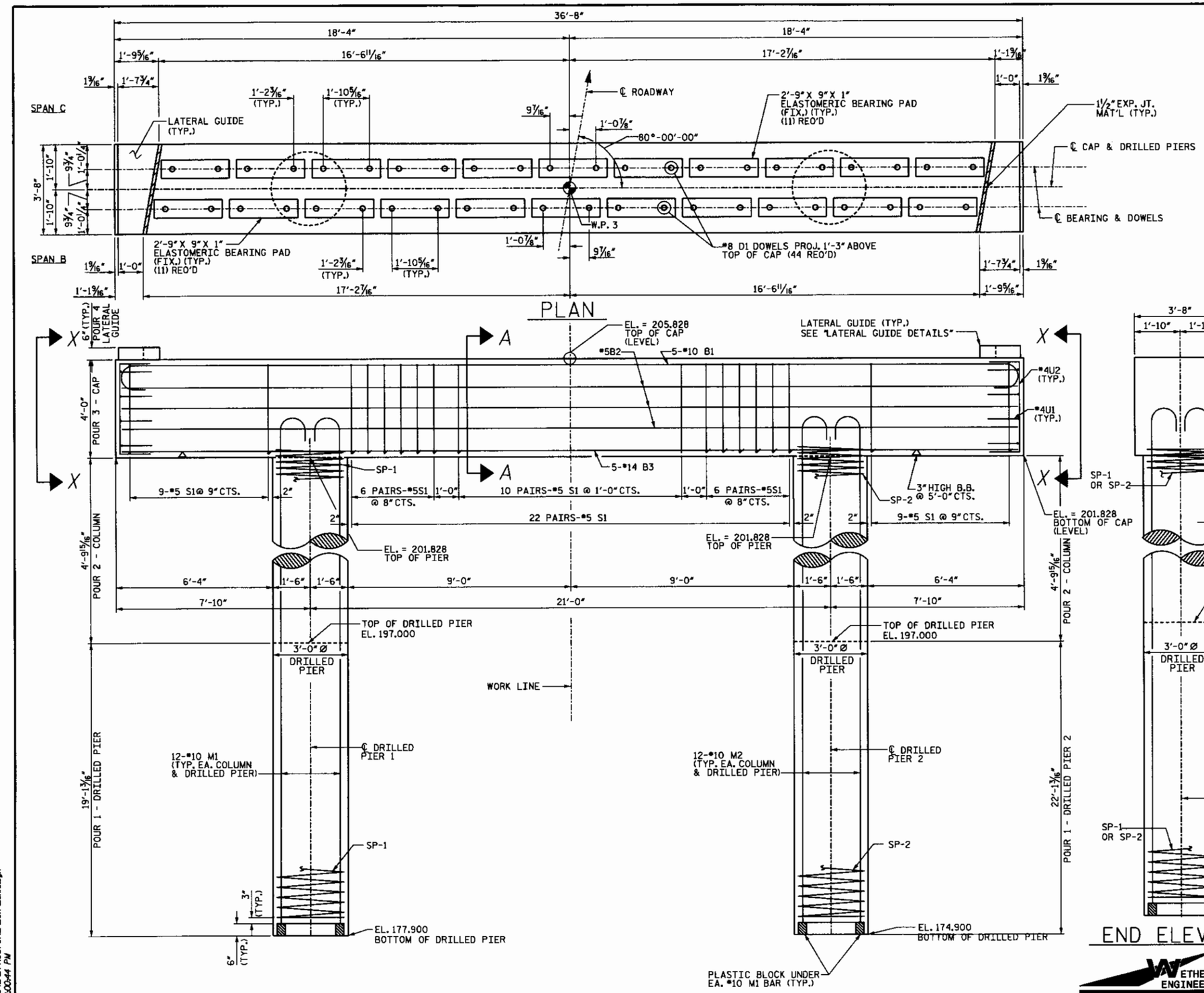

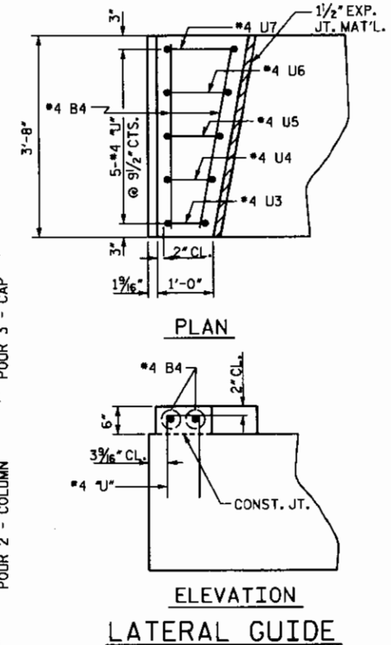

LATERAL GUIDE DETAIL

(EACH END SIMILAR)

NORTH CAROLINA PROFESSIONAL SEAL 22072 ENGINEER JOHN ARTHUR DILWORTH 5-23-11

WBS NO. 42815.1.1

FRANKLIN COUNTY

STATION: 13+69.04

REPLACES BRIDGE NO. 61

SHEET 1 OF 2

STATE OF NORTH CAROLINA
DEPARTMENT OF TRANSPORTATION
RALEIGH

SUBSTRUCTURE
BENT 2

REVISIONS								SHEET NO.
NO.	BY:	DATE:	NO.	BY:	DATE:			S-19
1			3					TOTAL SHEETS
2			4					25

WETHERILL ENGINEERING
559 Jones Franklin Rd. Suite 164
Raleigh, N.C. 27606
Bus: 919 851 8077
Fax: 919 851 8107
LICENSE NO. F-0377

TRANSPORTATION PLANNING/DESIGN - BRIDGE/STRUCTURE DESIGN
CIVIL/SITE DESIGN - GIS/GPS - CONSTRUCTION OBSERVATION

DRAWN BY : J.C. PENDERGRAFT DATE : 4/11
CHECKED BY : J.A. DILWORTH DATE : 4/11

P:\4100\MADSOM4B\STRUCTURE\DGN\Bents.dgn
5/23/2011 2:00:44 PM

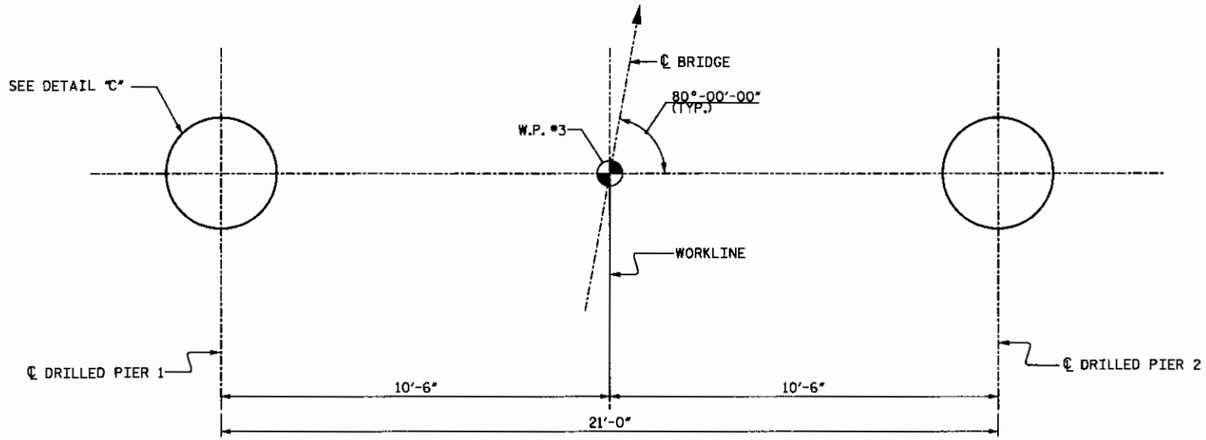

PLAN OF DRILLED PIERS

REINFORCING STEEL AND DIMENSIONS ARE TYPICAL FOR ALL DRILLED PIERS

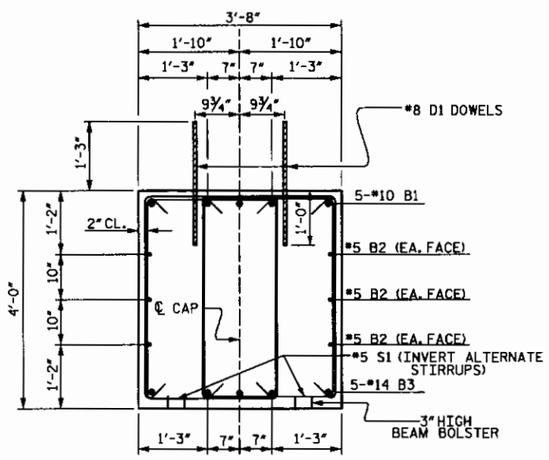

SECTION A-A

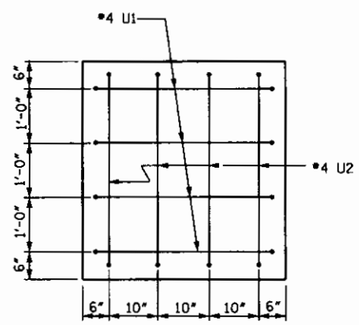

SECTION X-X

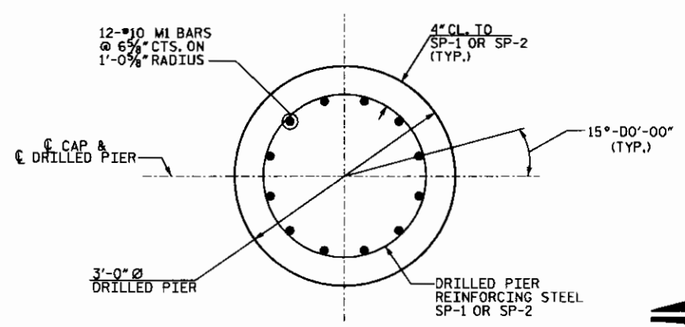

DETAIL "C"

BAR TYPES

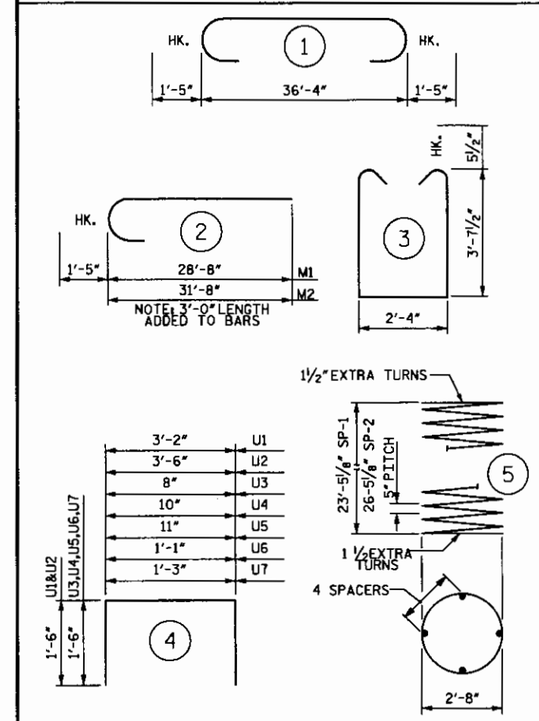

(ALL BAR DIMENSIONS ARE OUT TO OUT.)

* THE SP-1 & SP-2 SPIRAL REINFORCING STEEL SHALL BE W31 OR D-31 COLD DRAWN WIRE OR #5 PLAIN OR DEFORMED BAR.

BILL OF MATERIAL

BENT 2

BAR	NO.	SIZE	TYPE	LENGTH	WEIGHT
B1	5	#10	1	39'-2"	843
B2	6	#5	STR	36'-4"	227
B3	5	#14	STR	36'-4"	1390
B4	4	#4	STR	3'-4"	9
D1	44	#8	STR	2'-3"	264
M1	12	#10	2	30'-1"	1553
M2	12	#10	2	33'-1"	1708
S1	62	#5	3	10'-6"	679
U1	8	#4	4	6'-2"	33
U2	8	#4	4	6'-6"	35
U3	2	#4	4	3'-8"	5
U4	2	#4	4	3'-10"	5
U5	2	#4	4	3'-11"	5
U6	2	#4	4	4'-1"	5
U7	2	#4	4	4'-3"	6
REINFORCING STEEL					6767 LBS.

SPIRAL COLUMN REINFORCING STEEL					
SP-1	1	*	5	425'-3"	444
SP-2	1	*	5	476'-11"	497
SPIRAL REINFORCING STEEL					941 LBS.

CLASS A CONCRETE BREAKDOWN	
POUR 2 (COLUMN)	2.5 C.Y.
POUR 3 (CAP)	19.9 C.Y.
POUR 4 (LATERAL GUIDE)	0.2 C.Y.
TOTAL CLASS A CONCRETE	22.6 C.Y.

3'-0" Ø DRILLED PIERS

DRILLED PIER CONCRETE	
POUR 1 (DRILLED PIERS)	10.8 C.Y.
3'-0" Ø DRILLED PIERS IN SOIL :	28.3 LIN. FT.
3'-0" Ø DRILLED PIERS NOT IN SOIL :	12.9 LIN. FT.
3'-0" Ø PERMANENT STEEL CASING:	29.0 LIN. FT.

SEAL 22072 JOHN ARTHUR DILWORTH

WBS NO. 42815.1.1

FRANKLIN COUNTY

STATION: 13+69.04

REPLACES BRIDGE NO. 61

SHEET 2 OF 2

STATE OF NORTH CAROLINA
DEPARTMENT OF TRANSPORTATION
RALEIGH

SUBSTRUCTURE
BENT 2

WETHERILL ENGINEERING
559 Jones Franklin Rd. Suite 164
Raleigh, N.C. 27606
Bus: 919 851 8077
Fax: 919 851 8107
LICENSE NO. F-0377

TRANSPORTATION PLANNING/DESIGN - BRIDGE/STRUCTURE DESIGN
CIVIL/SITE DESIGN - GIS/GPS - CONSTRUCTION OBSERVATION

REVISIONS							SHEET NO.
NO.	BY:	DATE:	NO.	BY:	DATE:		S-20
1			3				TOTAL SHEETS
2			4				25

DRAWN BY : J.C. PENDERGRAFT DATE : 4/11
CHECKED BY : J.A. DILWORTH DATE : 4/11

P:\4100MA05004B\STRUCTURE\DGN\Bent2.dgn
5/23/2011 2:00:52 PM

NOTES

STIRRUPS IN CAP MAY BE SHIFTED AS NECESSARY TO CLEAR DOWELS.

HOOKS ON "M" BARS MAY BE TURNED AS NECESSARY FOR PLACING REINFORCING STEEL.

ALL STEEL IN THE DRILLED PIERS IS INCLUDED IN THE PAY ITEM FOR "PLACEMENT OF SUBSTRUCTURE."

FOR DRILLED PIERS, SEE SPECIAL PROVISIONS.

INVERT ALTERNATE STIRRUPS.

THE LATERAL GUIDE AT EACH END OF THE CAP SHALL NOT BE POURED UNTIL AFTER THE BOX BEAM UNITS ARE PLACED.

THE CONTRACTOR'S ATTENTION IS CALLED TO THE FACT THE LONGITUDINAL REINFORCEMENT FOR THE DRILLED PIERS IS DETAILED WITH 3 FEET OF EXTRA LENGTH.

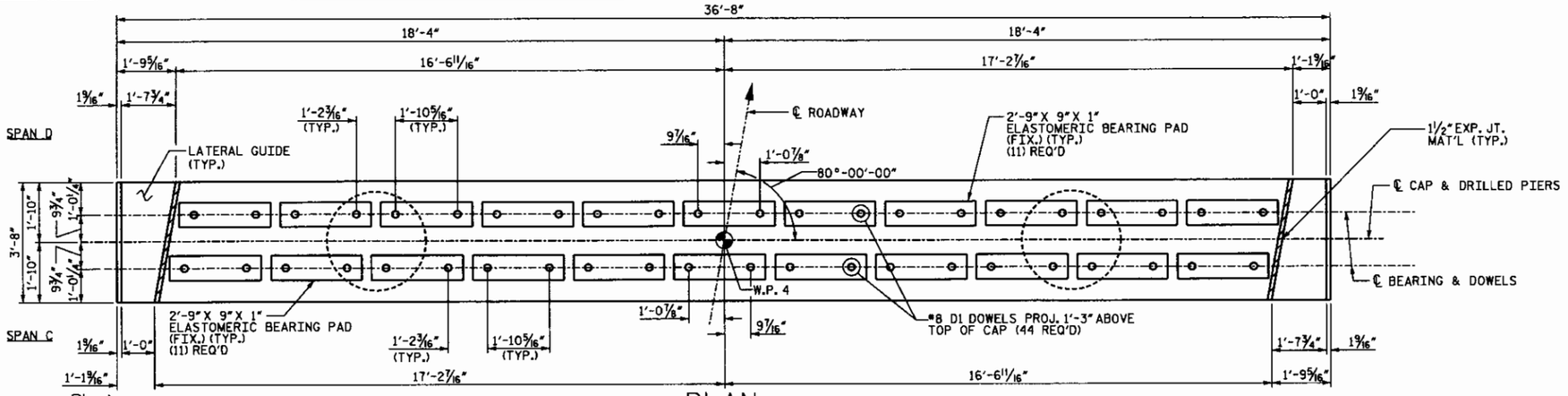

PLAN

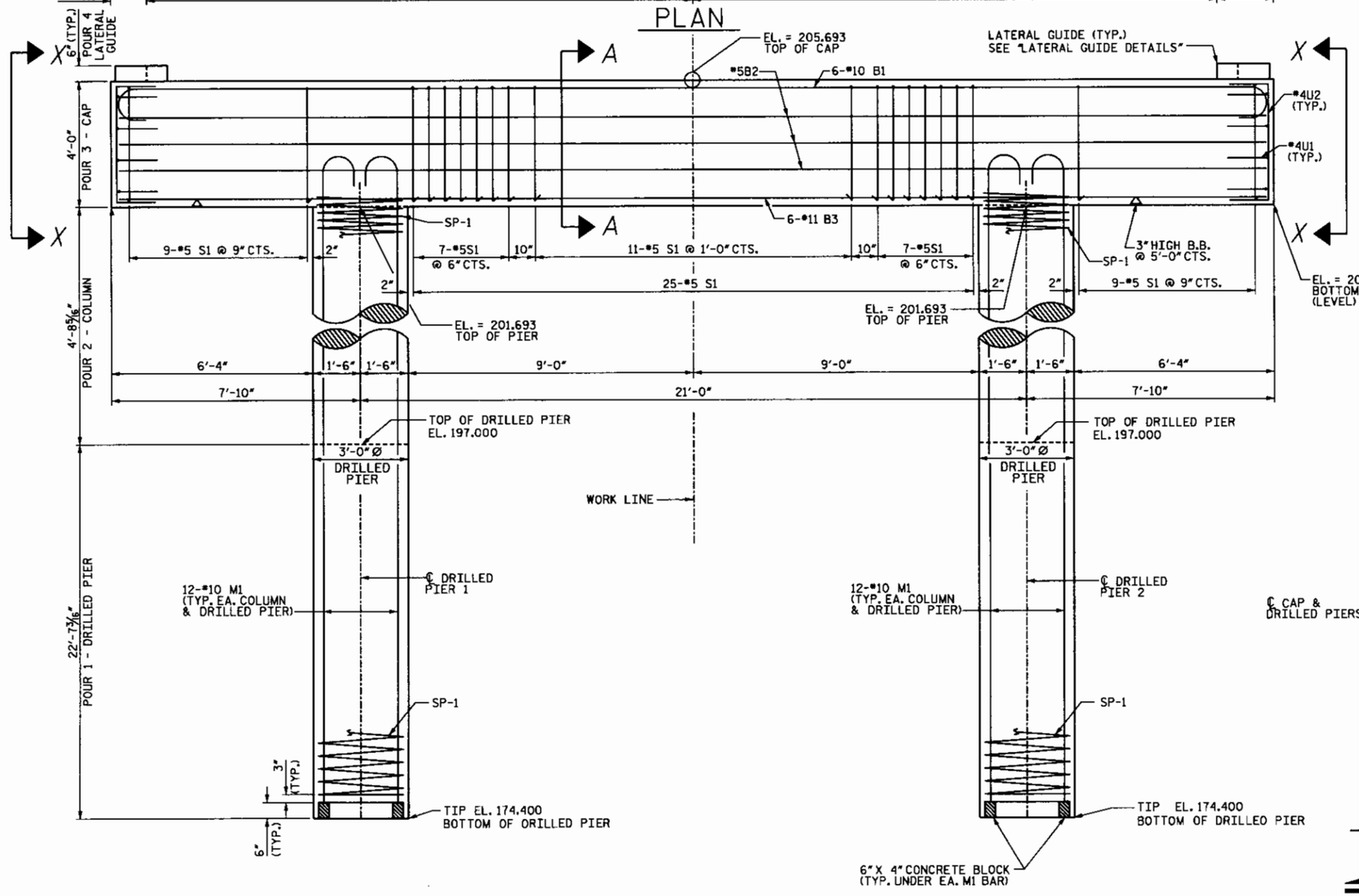

ELEVATION

REINFORCING STEEL AND DIMENSIONS TYPICAL FOR ALL DRILLED PIERS

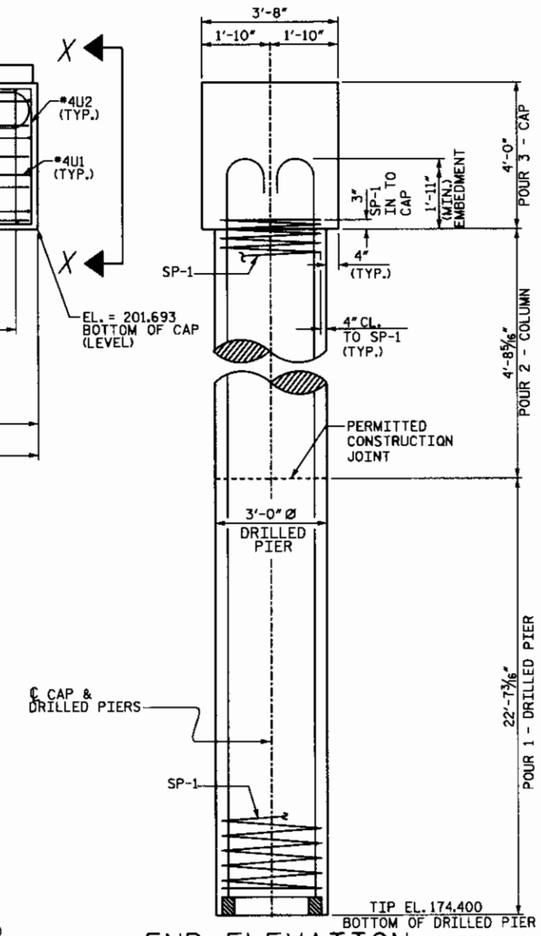

END ELEVATION

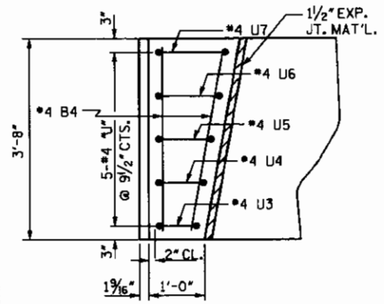

PLAN

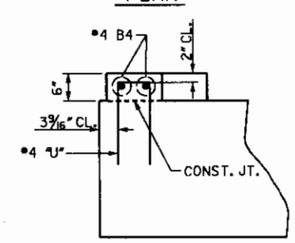

ELEVATION

LATERAL GUIDE DETAIL

(EACH END SIMILAR)

NORTH CAROLINA PROFESSIONAL SEAL 22072 ENGINEER JOHN ARTHUR DILWORTH

WBS NO. 42815.1.1

FRANKLIN COUNTY

STATION: 13+69.04

REPLACES BRIDGE NO. 61

SHEET 1 OF 2

STATE OF NORTH CAROLINA
DEPARTMENT OF TRANSPORTATION
RALEIGH

SUBSTRUCTURE
BENT 3

REVISIONS								SHEET NO.
NO.	BY:	DATE:	NO.	BY:	DATE:			S-21
1			3					TOTAL SHEETS
2			4					25

WETHERILL ENGINEERING
559 Jones Franklin Rd. Suite 164
Raleigh, N.C. 27606
Bus: 919 851 8077
Fax: 919 851 8107
LICENSE NO. F-0377

TRANSPORTATION PLANNING/DESIGN - BRIDGE/STRUCTURE DESIGN
CIVIL/SITE DESIGN - GIS/GPS - CONSTRUCTION OBSERVATION

DRAWN BY : J.C. PENDERGRAFT DATE : 4/11
CHECKED BY : J.A. DILWORTH DATE : 4/11

P:\4100\M\D50049\STRUCTURE\DGN\Bents.dgn
5/23/2011 2:01:02 PM

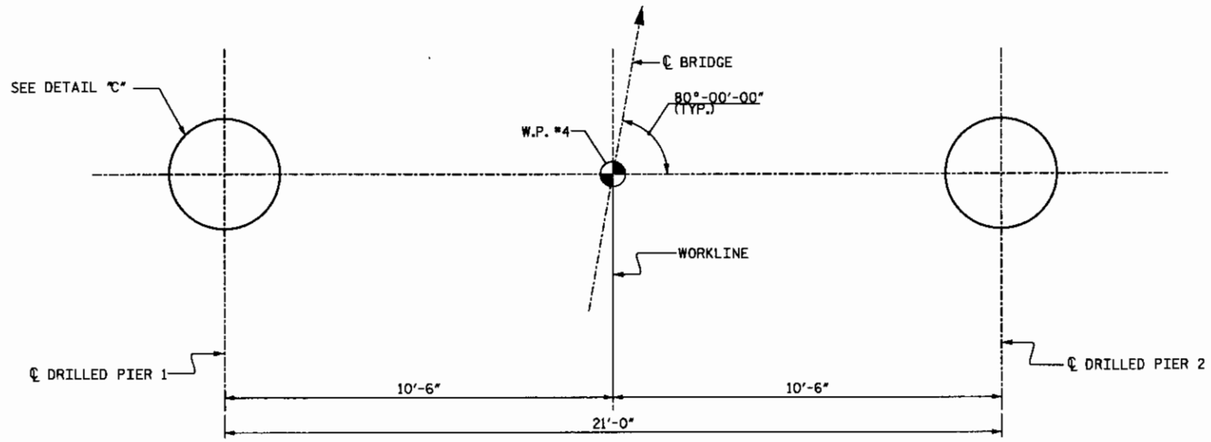

PLAN OF DRILLED PIERS

REINFORCING STEEL AND DIMENSIONS ARE TYPICAL FOR ALL DRILLED PIERS

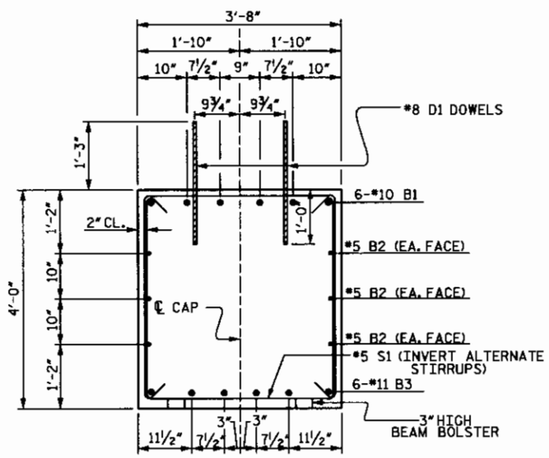

SECTION A-A

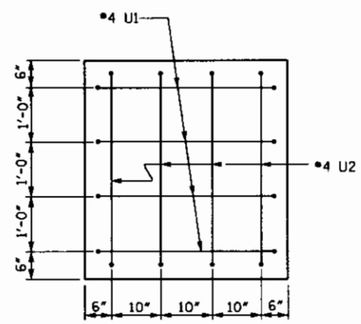

SECTION X-X

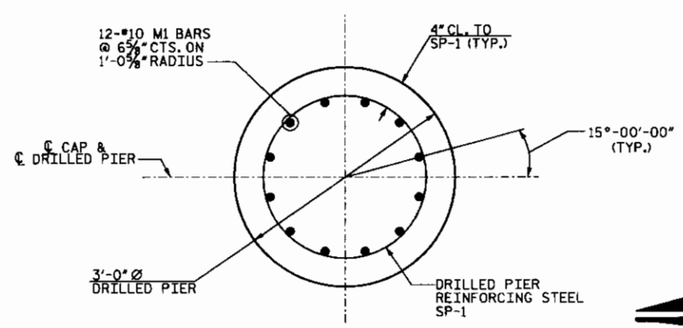

DETAIL "C"

BAR TYPES

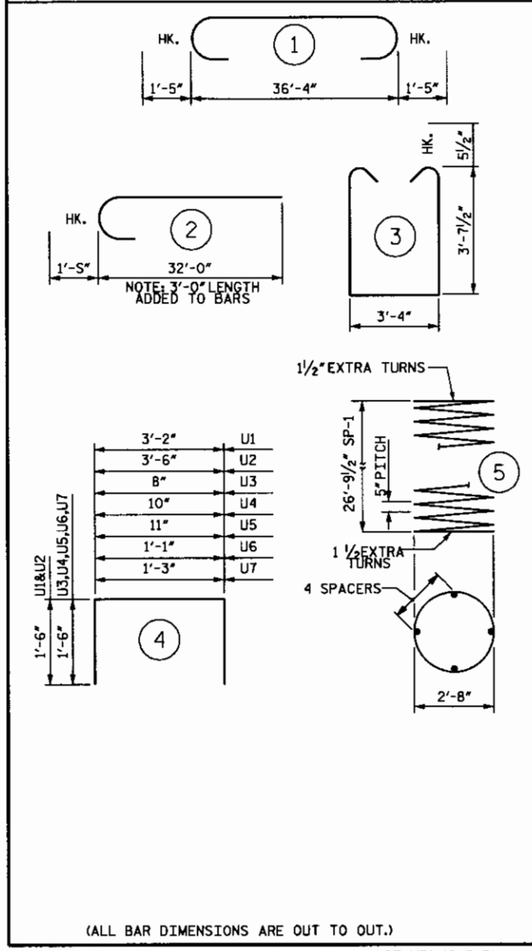

(ALL BAR DIMENSIONS ARE OUT TO OUT.)

* THE SP-1 SPIRAL REINFORCING STEEL SHALL BE W31 OR D-31 COLD DRAWN WIRE OR #5 PLAIN OR DEFORMED BAR.

BILL OF MATERIAL

BENT 3

BAR	NO.	SIZE	TYPE	LENGTH	WEIGHT
B1	5	#10	1	39'-2"	843
B2	6	#5	STR	36'-4"	227
B3	5	#14	STR	36'-4"	1390
B4	4	#4	STR	3'-4"	9
D1	44	#8	STR	2'-3"	264
M1	24	#10	2	33'-5"	3451
S1	43	#5	3	11'-6"	516
U1	8	#4	4	6'-2"	33
U2	8	#4	4	6'-6"	35
U3	2	#4	4	3'-8"	5
U4	2	#4	4	3'-10"	5
U5	2	#4	4	3'-11"	5
U6	2	#4	4	4'-1"	5
U7	2	#4	4	4'-3"	6
REINFORCING STEEL					6794 LBS.

SPIRAL COLUMN REINFORCING STEEL

SP-1	2	*	5	483'-2"	1008
SPIRAL REINFORCING STEEL					1008 LBS.

CLASS A CONCRETE BREAKDOWN

POUR 2 (COLUMNS)	2.5 C.Y.
POUR 3 (CAP)	19.9 C.Y.
POUR 4 (LATERAL GUIDE)	0.2 C.Y.
TOTAL CLASS A CONCRETE	22.6 C.Y.

3'-0" Ø DRILLED PIERS

DRILLED PIER CONCRETE

POUR 1 (DRILLED PIERS)	11.8 C.Y.
3'-0" Ø DRILLED PIERS IN SOIL :	34.7 LIN. FT.
3'-0" Ø DRILLED PIERS NOT IN SOIL :	10.5 LIN. FT.
3'-0" Ø PERMANENT STEEL CASING:	28.0 LIN. FT.

NORTH CAROLINA PROFESSIONAL SEAL 22072 ENGINEER JOHN ARTHUR DILWORTH
5-23-11

WBS NO. 42815.1.1

FRANKLIN COUNTY

STATION: 13+69.04

REPLACES BRIDGE NO. 61

SHEET 2 OF 2

STATE OF NORTH CAROLINA
DEPARTMENT OF TRANSPORTATION
RALEIGH

SUBSTRUCTURE
BENT 3

WETHERILL ENGINEERING

559 Jones Franklin Rd. Suite 164
Raleigh, N.C. 27606
Bus: 919 851 8077
Fax: 919 851 8107
LICENSE NO. F-0377

TRANSPORTATION PLANNING/DESIGN - BRIDGE/STRUCTURE DESIGN
CIVIL/SITE DESIGN - GIS/GPS - CONSTRUCTION OBSERVATION

REVISIONS						SHEET NO.
NO.	BY:	DATE:	NO.	BY:	DATE:	S-22
1			3			TOTAL SHEETS
2			4			25

DRAWN BY : J.C. PENDERGRAFT DATE : 4/11
CHECKED BY : J.A. DILWORTH DATE : 4/11

P:\4100\W405004B\STRUCTURE\DGN\Bents.dgn
5/23/2011 2:01:09 PM

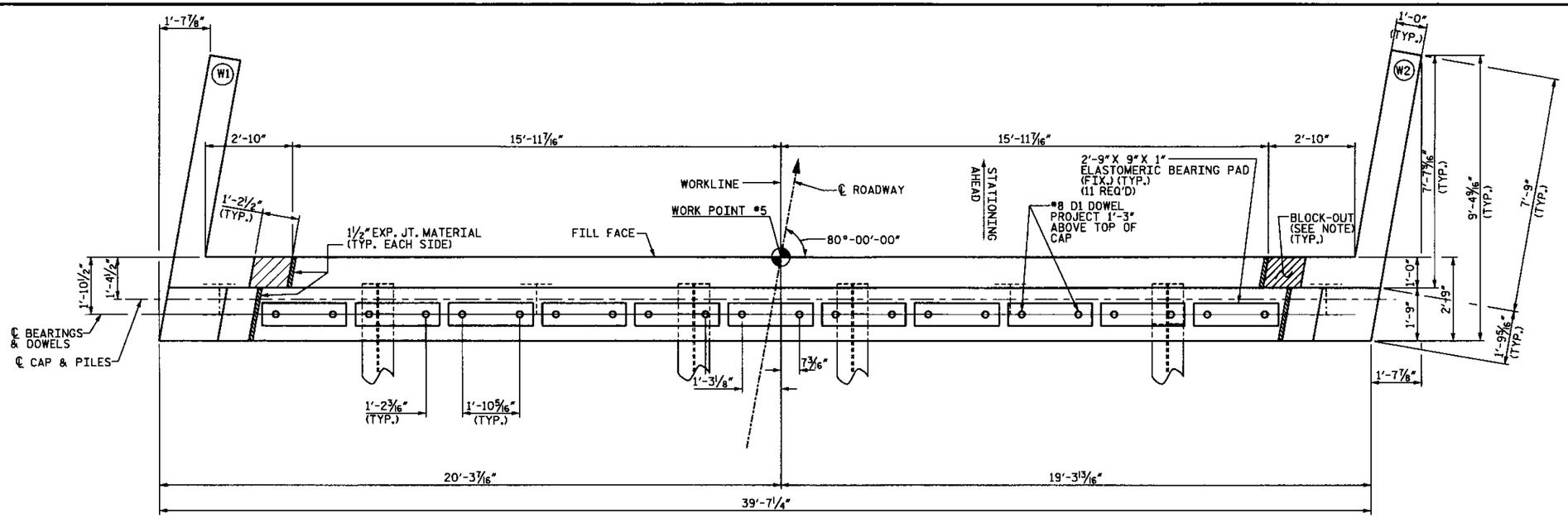

PLAN

NOTES:

STIRRUPS IN CAP MAY BE SHIFTED AS NECESSARY TO CLEAR DOWELS.

FOR SECTION A-A, SEE END BENT 1, SHEET 2 OF 3.

FOR MISC. DETAILS, SEE END BENT 1, SHEET 2 OF 3.

THE CONCRETE IN THE SHADED AREA OF THE WINGS SHALL BE POURED AFTER THE BARRIER RAIL IS CAST IF SLIP FORMING IS USED.

THE LATERAL GUIDE AT EACH END OF THE CAP IS NOT TO BE POURED UNTIL AFTER THE BOX BEAM UNITS ARE IN PLACE.

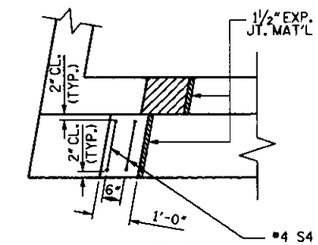

PLAN

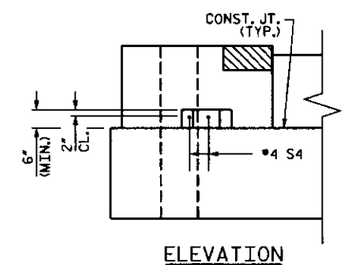

ELEVATION

LATERAL GUIDE DETAILS

(TYP. EACH LATERAL GUIDE)

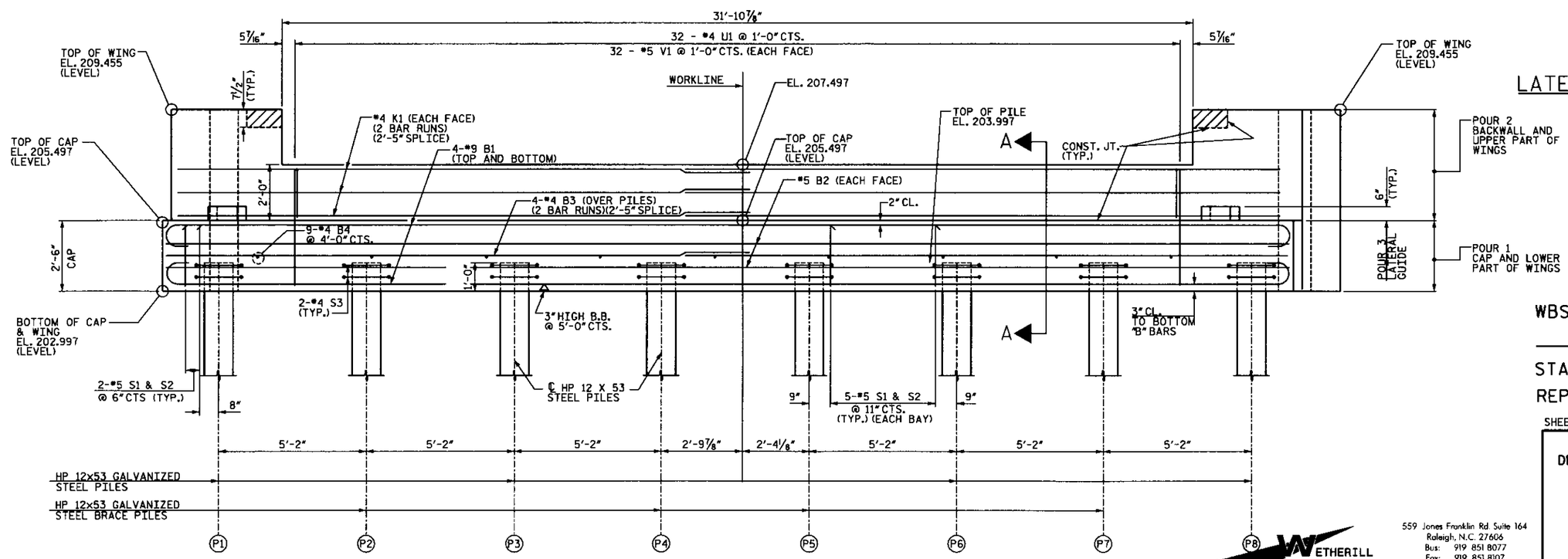

ELEVATION

WBS NO. 42815.1.1

FRANKLIN COUNTY

STATION: 13+69.04

REPLACES BRIDGE NO. 61

SHEET 1 OF 2

STATE OF NORTH CAROLINA
DEPARTMENT OF TRANSPORTATION
RALEIGH

SUBSTRUCTURE
END BENT 2

ETHERILL ENGINEERING
559 Jones Franklin Rd. Suite 164
Raleigh, N.C. 27606
Bus: 919 851 8077
Fax: 919 851 8107
LICENSE NO. F-0377

TRANSPORTATION PLANNING/DESIGN - BRIDGE/STRUCTURE DESIGN
CIVIL/SITE DESIGN - GIS/GPS - CONSTRUCTION OBSERVATION

REVISIONS						SHEET NO.
NO.	BY:	DATE:	NO.	BY:	DATE:	S-23
1			3			TOTAL SHEETS
2			4			25

DRAWN BY : J.C. PENDERGRAFT DATE : 4/11
CHECKED BY : J.A. DILWORTH DATE : 4/11

P:\41100\A050049\STRUCTURE\DGN\End Bent 2.dgn
5/23/2011 2:07:41 PM

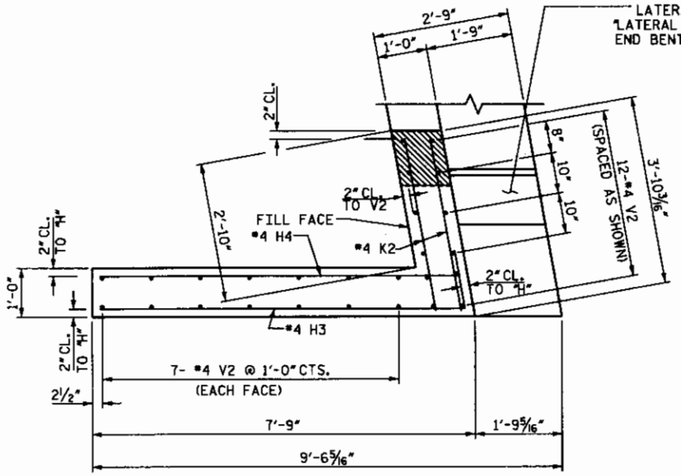

PLAN OF WING (W1)

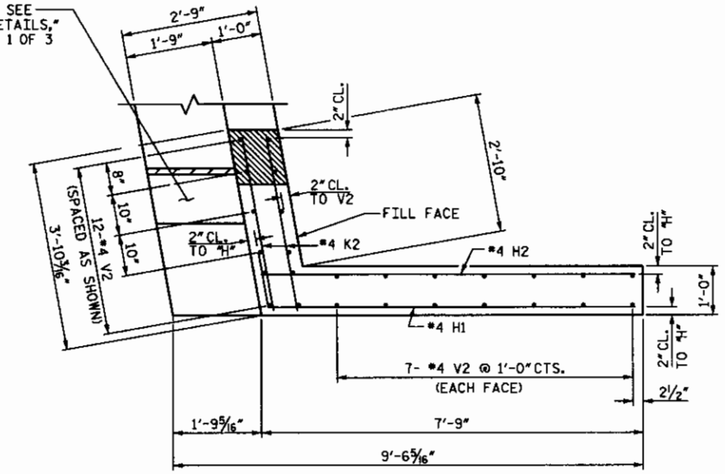

PLAN OF WING (W2)

BAR TYPES

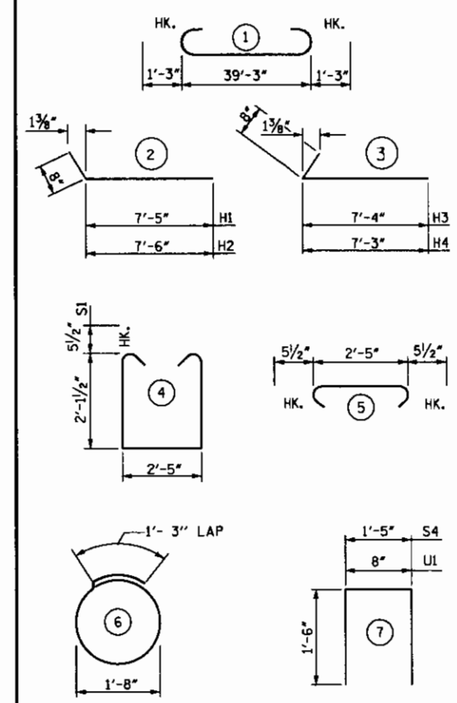

(ALL BAR DIMENSIONS ARE OUT TO OUT.)

BILL OF MATERIAL

END BENT 2

BAR	NO.	SIZE	TYPE	LENGTH	WEIGHT
B1	8	#9	1	41'-9"	1136
B2	4	#5	STR	39'-3"	164
B3	8	#4	STR	20'-11"	112
B4	9	#4	STR	2'-5"	15
D1	22	#8	STR	2'-3"	132
H1	8	#4	2	8'-1"	43
H2	8	#4	2	8'-2"	44
H3	8	#4	3	8'-0"	43
H4	8	#4	3	7'-11"	42
K1	12	#4	STR.	20'-11"	168
K2	8	#4	STR.	3'-6"	19
S1	39	#5	4	7'-7"	308
S2	39	#5	5	3'-4"	136
S3	16	#4	6	6'-6"	69
S4	4	#4	7	4'-5"	12
U1	32	#4	7	3'-8"	78
V1	64	#5	STR	4'-1"	273
V2	52	#4	STR	6'-1"	211

REINFORCING STEEL = 3005 LBS.

CLASS A CONCRETE

POUR 1
CAP & LOWER WINGS 11.3 C.Y.

POUR 2
BACKWALL & UPPER WINGS 5.5 C.Y.

POUR 3
LATERAL GUIDES 0.1 C.Y.

TOTAL 16.9 C.Y.

HP 12 X 53 GALVANIZED STEEL PILES
NO. = 8 180 LIN. FT.

STEEL PILE POINTS
NO. = 8

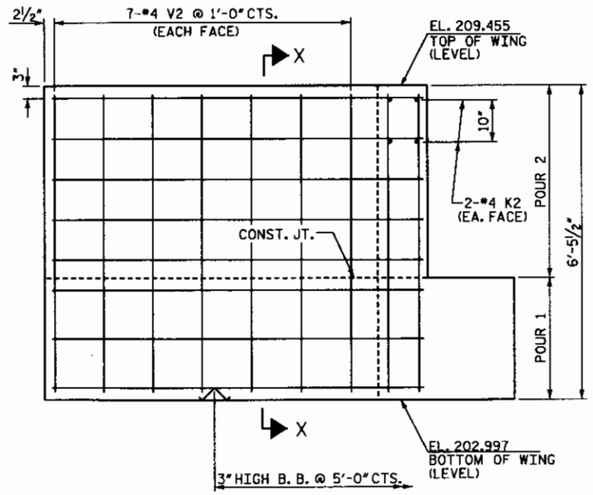

ELEVATION OF WING (W1)

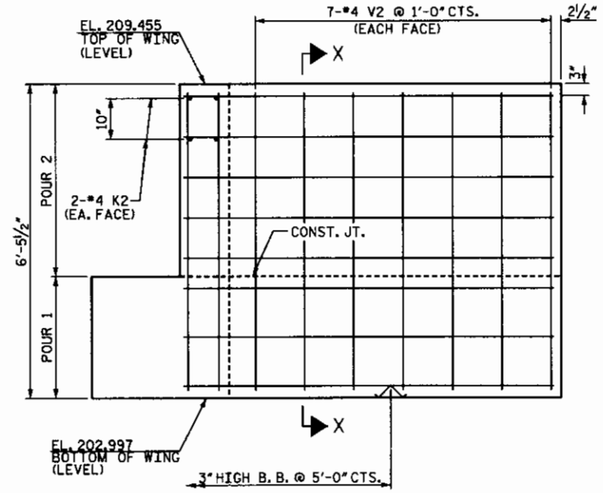

ELEVATION OF WING (W2)

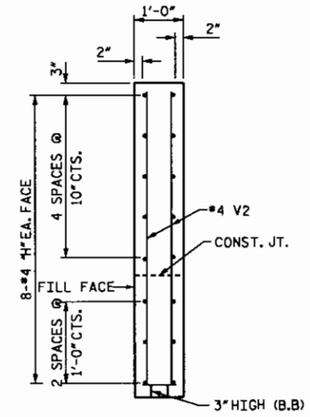

SECTION X-X

WBS NO. 42815.1.1

FRANKLIN COUNTY

STATION: 13+69.04

REPLACES BRIDGE NO. 61

SHEET 2 OF 2

STATE OF NORTH CAROLINA
DEPARTMENT OF TRANSPORTATION
RALEIGH

SUBSTRUCTURE
END BENT 2

WETHERILL ENGINEERING
559 Jones Franklin Rd. Suite 164
Raleigh, N.C. 27606
Bus: 919 851 8077
Fax: 919 851 8107
LICENSE NO. F-0377

TRANSPORTATION PLANNING/DESIGN - BRIDGE/STRUCTURE DESIGN
CIVIL/SITE DESIGN - GIS/GPS - CONSTRUCTION OBSERVATION

REVISIONS						SHEET NO.
NO.	BY:	DATE:	NO.	BY:	DATE:	S-24
1			3			TOTAL SHEETS
2			4			25

DRAWN BY : J.C. PENDERGRAFT DATE : 4/11
CHECKED BY : J.A. DILWORTH DATE : 4/11

P:\4100\M\050048\STRUCTURE\DGN\End Bent 2.dgn
5/23/2011 2:08:07 PM

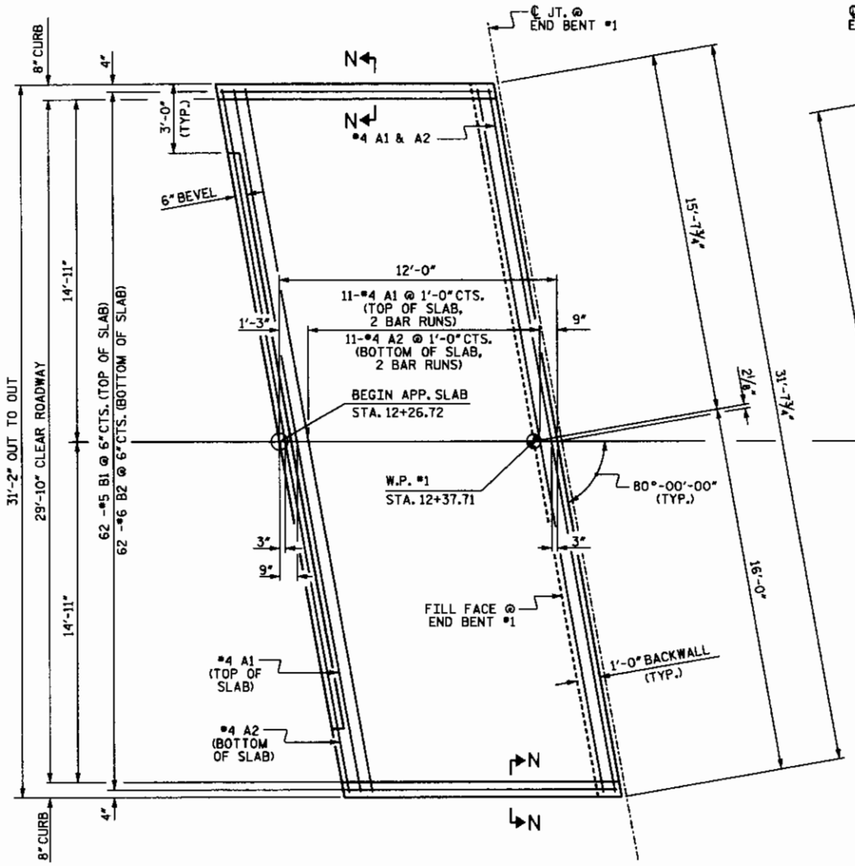

PLAN @ END BENT #1

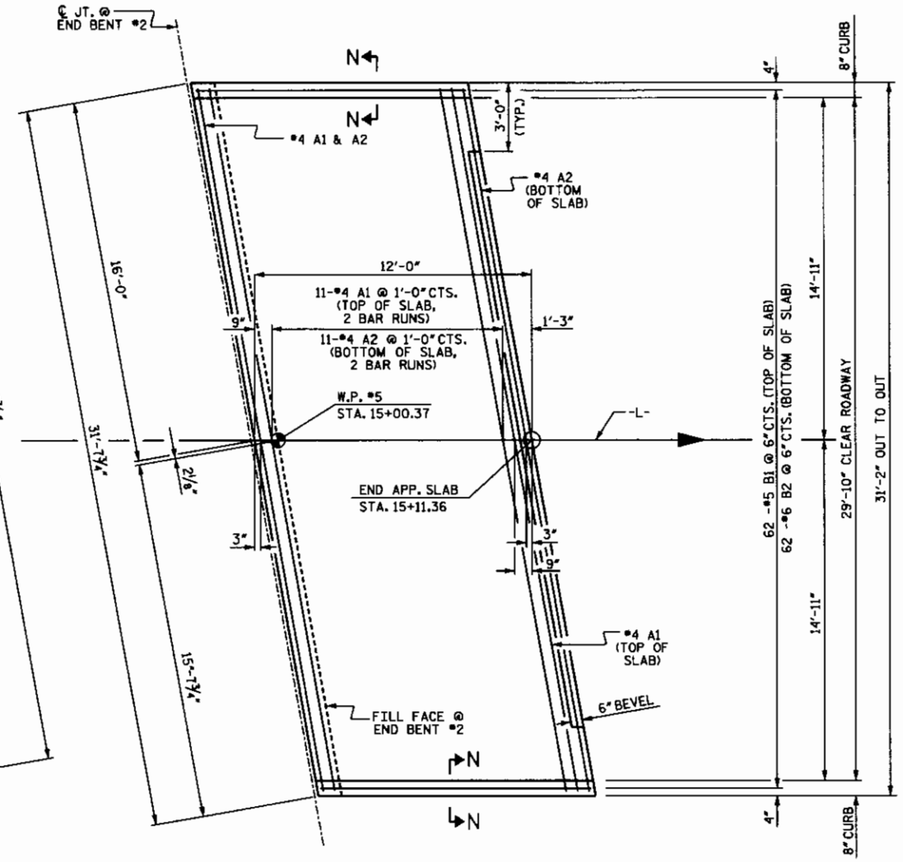

PLAN @ END BENT #2

NOTES

FOR BRIDGE APPROACH FILL INCLUDING FABRIC, 4" Ø DRAINAGE PIPE, AND #78M STONE BACKFILL, SEE ROADWAY PLANS.

APPROACH SLAB SHALL NOT BE CONSTRUCTED PRIOR TO COMPLETION OF THE BRIDGE DECK.

FABRIC SHALL BE TYPE 1 ENGINEERING FABRIC IN ACCORDANCE WITH THE STANDARD SPECIFICATIONS SECTION 1056.

#78M STONE BACKFILL (CLASS V SELECT MATERIAL) SHALL BE IN ACCORDANCE WITH STANDARD SPECIFICATIONS SECTION 1016.

#78M STONE BACKFILL IS TO BE CONTINUOUS ALONG FILL FACE OF BACKWALL FROM OUTSIDE EDGE TO OUTSIDE EDGE OF APPROACH SLAB.

FOR THE 4" Ø DRAINAGE PIPE OUTLET(S), SEE ROADWAY STANDARD DRAWINGS.

AREA BETWEEN THE WINGWALL AND APPROACH SLAB SHALL BE GRADED TO DRAIN THE WATER AWAY FROM THE FILL FACE OF THE BRIDGE AND SHALL BE PAVED. SEE ROADWAY PLANS.

THE 6" COMP. A.B.C. SHALL BE FLUSH WITH THE ROADWAY END OF THE APPROACH SLAB AND SHALL EXTEND 1'-0" OUTSIDE OF EACH EDGE OF THE APPROACH SLAB.

THE CONTRACTOR MAY USE 4" TYPE B-25.0B ASPHALT CONCRETE BASE COURSE IN LIEU OF 6" COMP. A.B.C. IF THIS OPTION IS USED, THE BASE COURSE SHALL BE FLUSH WITH THE ROADWAY END OF THE APPROACH SLAB, AND THE WIDTH SHALL BE THE SAME AS THAT OF THE APPROACH SLAB.

THE CONTRACTOR MAY USE 5" CLASS "A" CONCRETE BASE IN LIEU OF 6" COMP. A.B.C. IF THIS OPTION IS USED, THE CONCRETE BASE SHALL BE FLUSH WITH THE ROADWAY END OF THE APPROACH SLAB, AND THE WIDTH SHALL BE THE SAME AS THAT OF THE APPROACH SLAB. THE CONCRETE SHALL BE FINISHED TO A SMOOTH SURFACE AND A LAYER OF 30 LB ROOFING FELT SHALL BE PLACED BETWEEN THE CONCRETE BASE AND THE APPROACH SLAB TO PREVENT BOND. THE APPROACH SLAB SHALL NOT BE CAST UNTIL THE CONCRETE BASE HAS REACHED AN AGE OF THREE CURING DAYS.

FOR JOINT DETAILS, SEE "PRESTRESSED CONCRETE BOX BEAM UNIT."

THE JOINT AT THE END BENT SHALL BE GROUTED AS SOON AS PRACTICAL AFTER THE CONSTRUCTION OF THE APPROACH SLABS.

APPROACH SLAB GROOVING IS NOT REQUIRED.

TEMPORARY DRAINAGE AND TEMPORARY BERM AND SLOPE DRAINS WILL BE PAID FOR UNDER THE LUMP SUM PRICE FOR APPROACH SLABS, SEE ROADWAY STANDARD 1622.01.

THE BRIDGE APPROACH FILL SHALL BE PAID UNDER THE LUMP SUM PRICE FOR "BRIDGE APPROACH FILL - SUB REGIONAL TIER, STATION 13+69.04".

THE BRIDGE APPROACH SLABS SHALL BE PAID UNDER THE LUMP SUM PRICE FOR "BRIDGE APPROACH SLAB".

SPLICE CHART	
BAR	SPLICE LENGTH
#4 A1	2'-0"
#4 A2	1'-9"

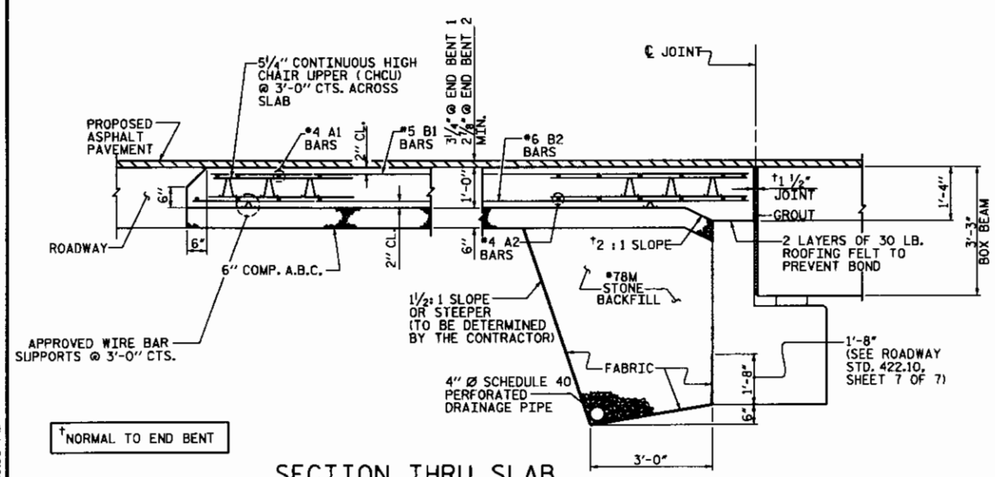

†NORMAL TO END BENT

SECTION THRU SLAB

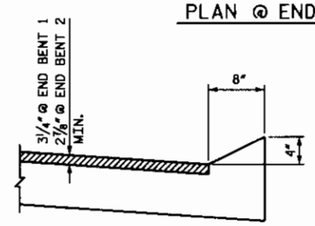

SECTION N-N

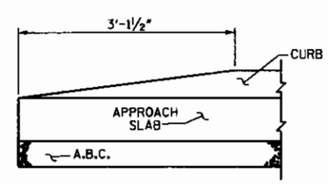

END OF CURB WITHOUT SHOULDER BERM GUTTER

CURB DETAILS

BILL OF MATERIAL APPROACH SLAB AT EB 1						BILL OF MATERIAL APPROACH SLAB AT EB 2					
BAR	NO.	SIZE	TYPE	LENGTH	WEIGHT	BAR	NO.	SIZE	TYPE	LENGTH	WEIGHT
* A1	26	#4	STR	16'-8"	289	* A1	26	#4	STR	16'-8"	289
A2	26	#4	STR	16'-7"	288	A2	26	#4	STR	16'-7"	288
* B1	62	#5	STR	11'-2"	722	* B1	62	#5	STR	11'-2"	722
B2	62	#6	STR	11'-8"	1086	B2	62	#6	STR	11'-8"	1086
REINFORCING STEEL				LBS.	1374	REINFORCING STEEL				LBS.	1374
* EPOXY BOATED REINFORCING SEEL				LBS.	1011	* EPOXY BOATED REINFORCING SEEL				LBS.	1011
CLASS AA CONCRETE				C.Y.	14.5	CLASS AA CONCRETE				C.Y.	14.5

NORTH CAROLINA PROFESSIONAL SEAL 22072 ENGINEER JOHN ARTHUR DILWORTH

5-23-11

WBS NO. 42815.1.1

FRANKLIN COUNTY

STATION: 13+69.04

REPLACES BRIDGE NO. 61

WETHERILL ENGINEERING
559 Jones Franklin Rd Suite 164
Raleigh, N.C. 27606
Bus: 919 851 8077
Fax: 919 851 8107
LICENSE NO. F-0377

TRANSPORTATION PLANNING/DESIGN - BRIDGE/STRUCTURE DESIGN
CIVIL/SITE DESIGN - GIS/GPS - CONSTRUCTION OBSERVATION

STATE OF NORTH CAROLINA
DEPARTMENT OF TRANSPORTATION
RALEIGH

STANDARD

BRIDGE APPROACH SLAB FOR PRESTRESSED CONCRETE BOX BEAM UNIT (SUB-REGIONAL TIER)

REVISIONS						SHEET NO.
NO.	BY:	DATE:	NO.	BY:	DATE:	S-25
1			3			TOTAL SHEETS
2			4			25

DRAWN BY : J.C. PENDERGRAFT DATE : 4/11
CHECKED BY : J.A. DILWORTH DATE : 4/11

P:\4100\M\R50048\STRUCTURE\DGN\approachslab1d.dgn
5/23/2011 2:09:33 PM

STANDARD NOTES

DESIGN DATA:

SPECIFICATIONS	A.A.S.H.T.O. (CURRENT)
LIVE LOAD	SEE PLANS
IMPACT ALLOWANCE	SEE A.A.S.H.T.D.
STRESS IN EXTREME FIBER OF	
STRUCTURAL STEEL - AASHTO M270 GRADE 36	20,000 LBS. PER SO. IN.
- AASHTD M270 GRADE 50W	27,000 LBS. PER SO. IN.
- AASHTO M27D GRADE 50	27,000 LBS. PER SO. IN.
REINFORCING STEEL IN TENSION	
GRADE 60	24,000 LBS. PER SO. IN.
CONCRETE IN CDMPRESSION	1,200 LBS. PER SO. IN.
CONCRETE IN SHEAR	SEE A.A.S.H.T.O.
STRUCTURAL TIMBER - TREATED OR	
UNTREATED - EXTREME FIBER STRESS	1,800 LBS. PER SO. IN.
CDMPRESSION PERPENDICULAR TO GRAIN OF TIMBER	375 LBS. PER SO. IN.
EOUIVALENT FLUID PRESSURE OF EARTH	30 LBS. PER CU. FT. (MINIMUM)

MATERIAL AND WORKMANSHIP:

EXCEPT AS MAY OTHERWISE BE SPECIFIED ON PLANS OR IN THE SPECIAL PROVISIONS, ALL MATERIAL AND WORKMANSHIP SHALL BE IN ACCORDANCE WITH THE 2D06 "STANDARD SPECIFICATIDNS FOR ROADS ANO STRUCTURES" OF THE N. C. DEPARTMENT OF TRANSPORTATION.

STEEL SHEET PILING FOR PERMANENT OR TEMPORARY APPLICATIONS SHALL BE HDT ROLLED.

CONCRETE:

UNLESS DTHERWISE REDUIRED ON PLANS, CLASS A CONCRETE SHALL BE USED FOR ALL PORTIONS OF ALL STRUCTURES WITH THE EXCEPTION THAT: CLASS AA CONCRETE SHALL BE USED IN BRIDGE SUPERSTRUCTURES, ABUTMENT BACKWALLS, ANO APPROACH SLABS; AND CLASS B CDNCRETE SHALL BE USED FOR SLOPE PROTECTION AND RIP RAP.

CONCRETE CHAMFERS:

UNLESS OTHERWISE NOTEO ON THE PLANS, ALL EXPOSED CORNERS ON STRUCTURES SHALL BE CHAMFERED 3/4" WITH THE FOLLOWING EXCEPTIONS: TDP CORNERS OF CURBS MAY BE ROUNDED TO 1-1/2" RADIUS WHICH IS BUILT INTO CURB FORMS; CDRNERS OF TRANSVERSE FLDOR EXPANSION JOINTS SHALL BE ROUNDED WITH A 1/4" FINISHING TDDL UNLESS OTHERWISE REOUIRED DN PLANS; AND CDRNERS OF EXPANSIDN JOINTS IN THE ROADWAY FACES AND TOPS DF CURBS AND SIDEWALKS SHALL BE ROUNDED TO A 1/4" RADIUS WITH A FINISHING STDNE OR TOOL UNLESS OTHERWISE REQUIRED ON PLANS.

DOWELS:

DDWELS WHEN INOICATED ON PLANS AS FOR CULVERT EXTENSIONS, SHALL BE EMBEDDED AT LEAST 12" INTO THE OLD CONCRETE AND GROUTED INTO PLACE WITH 1:2 CEMENT MORTAR.

ALLOWANCE FOR DEAD LOAD DEFLECTION, SETTLEMENT, ETC. IN CASTING SUPERSTRUCTURES:

BRIDGES SHALL BE BUILT ON THE GRADE OR VERTICAL CURVE SHOWN ON PLANS. SLABS, CURBS AND PARAPETS SHALL CONFORM TO THE GRADE OR CURVE.

ALL DIMENSIONS WHICH ARE GIVEN IN SECTION AND ARE AFFECTED BY DEAD LOAD DEFLECTIONS ARE DIMENSIONS AT CENTER LINE OF BEARING UNLESS OTHERWISE NOTED ON PLANS. IN SETTING FORMS FOR STEEL BEAM BRIDGES AND PRESTRESSED CONCRETE GIRDER BRIDGES, ADJUSTMENTS SHALL BE MADE DUE TO THE DEAD LOAD DEFLECTIONS FOR THE ELEVATIONS SHOWN. WHERE BLOCKS ARE SHOWN OVER BEAMS FOR BUILDING UP TO THE SLAB, THE VERTICAL DIMENSIONS OF THE BLOCKS SHALL BE ADJUSTED BETWEEN BEARINGS TO COMPENSATE FOR DEAD LOAD DEFLECTIONS, VERTICAL CURVE ORDINATE, AND ACTUAL BEAM CAMBER. WHERE BOTTOM OF SLAB IS IN LINE WITH BOTTOM OF TOP FLANGES, DEPTH OF SLAB BETWEEN BEARINGS SHALL BE ADJUSTED TO COMPENSATE FOR DEAD LOAD DEFLECTION, VERTICAL CURVE ORDINATE, AND ACTUAL BEAM CAMBER.

IN SETTING FALSEWORK AND FORMS FOR REINFORCED CONCRETE SPANS, AN ALLOWANCE SHALL BE MADE FOR DEAD LOAD DEFLECTIONS, SETTLEMENT OF FALSEWORK, AND PERMANENT CAMBER WHICH SHALL BE PROVIDED FOR IN ADDITION TO THE ELEVATIONS SHOWN. AFTER REMOVAL OF THE FALSEWORK, THE FINISHED STRUCTURES SHALL CONFORM TO THE PROFILE AND ELEVATIONS SHOWN ON THE PLANS AND CONSTRUCTION ELEVATIONS FURNISHED BY THE ENGINEER.

DETAILED DRAWINGS FOR FALSEWORK OR FORMS FOR BRIDGE SUPERSTRUCTURE AND ANY STRUCTURE OR PARTS OF A STRUCTURE AS NOTED ON THE PLANS SHALL BE SUBMITTED TO THE ENGINEER FOR APPROVAL BEFORE CONSTRUCTION OF THE FALSEWORK OR FORMS IS STARTED.

REINFORCING STEEL:

ALL REINFORCING STEEL SHALL BE DEFORMED. DIMENSIONS RELATIVE TO PLACEMENT OF REINFORCING ARE TO CENTERS OF BARS UNLESS OTHERWISE INDICATED IN THE PLANS. DIMENSIONS ON BAR DETAILS ARE TO CENTERS OF BARS OR ARE OUT TO OUT AS INDICATED ON PLANS.

WIRE BAR SUPPORTS SHALL BE PROVIDED FOR REINFORCING STEEL WHERE INDICATED ON THE PLANS. WHEN BAR SUPPORT PIECES ARE PLACED IN CONTINUOUS LINES, THEY SHALL BE SO PLACED THAT THE ENDS OF THE SUPPORTING WIRES SHALL BE LAPPED TO LOCK LEGS ON ADJOINING PIECES.

STRUCTURAL STEEL:

AT THE CONTRACTOR'S OPTION, HE MAY SUBSTITUTE 7/8" Ø SHEAR STUDS FOR THE 3/4" Ø STUDS SPECIFIED ON THE PLANS. THIS SUBSTITUTION SHALL BE MADE AT THE RATE OF 3 - 7/8" Ø STUDS FOR 4 - 3/4" Ø STUDS, AND STUD SPACING CHANGES SHALL BE MADE AS NECESSARY TO PROVIDE THE SAME EQUIVALENT NUMBER OF 7/8" Ø STUDS ALONG THE BEAM AS SHOWN FOR 3/4" Ø STUDS BASED ON THE RATIO OF 3 - 7/8" Ø STUDS FOR 4 - 3/4" Ø STUDS. STUDS OF THE LENGTH SPECIFIED ON THE PLANS MUST BE PROVIDED. THE MAXIMUM SPACING SHALL BE 2'-0".

EXCEPT AT THE INTERIOR SUPPORTS OF CONTINUOUS BEAMS WHERE THE COVER PLATE IS IN CONTACT WITH BEARING PLATE, THE CONTRACTOR MAY, AT HIS OPTION, SUBSTITUTE FOR THE COVER PLATES DESIGNATED ON THE PLANS COVER PLATES OF THE EQUIVALENT AREA PROVIDED THESE PLATES ARE AT LEAST 5/16" IN THICKNESS AND DO NOT EXCEED A WIDTH EQUAL TO THE FLANGE WIDTH LESS 2" OR A THICKNESS EQUAL TO 2 TIMES THE FLANGE THICKNESS. THE SIZE OF FILLET WELDS SHALL CONFORM TO THE REQUIREMENTS OF THE CURRENT ANSI/AASHTO/AWS "BRIDGE WELDING CODE". ELECTROSLAG WELDING WILL NOT BE PERMITTED.

WITH THE SOLE EXCEPTION OF EDGES AT SURFACES WHICH BEAR ON OTHER SURFACES, ALL SHARP EDGES AND ENDS OF SHAPES AND PLATES SHALL BE SLIGHTLY ROUNDED BY SUITABLE MEANS TO A RADIUS OF APPROXIMATELY 1/16 INCH OR EQUIVALENT FLAT SURFACE AT A SUITABLE ANGLE PRIOR TO PAINTING, GALVANIZING, OR METALLIZING.

HANDRAILS AND POSTS:

METAL STANDARDS AND FACES OF THE CONCRETE END POSTS FOR THE METAL RAIL SHALL BE SET NORMAL TO THE GRADE OF THE CURB, UNLESS OTHERWISE SHOWN ON PLANS. THE METAL RAIL AND TOPS OF CONCRETE POSTS USED WITH THE ALUMINUM RAIL SHALL BE BUILT PARALLEL TO THE GRADE OF THE CURB.

METAL HANDRAILS SHALL BE IN ACCORDANCE WITH THE PLANS. RAILS SHALL BE AS MANUFACTURED FOR BRIDGE RAILING. CASTINGS SHALL BE OF A UNIFORM APPEARANCE. FINS AND OTHER DEFORMATIONS RESULTING FROM CASTING DR OTHERWISE SHALL BE REMDVED IN A MANNER SO THAT A UNIFORM COLORING OF THE COMPLETED CASTING SHALL BE OBTAINED. CASTINGS WITH DISCOLORATIONS OR OF NON-UNIFORM COLORING WILL NOT BE ACCEPTED. CERTIFIED MILL REPORTS ARE REOUIRED FOR METAL RAILS AND POSTS.

SPECIAL NOTES:

GENERALLY, IN CASE OF DISCREPANCY, THIS STANDARD SHEET OF NOTES SHALL GOVERN OVER THE SPECIFICATIONS, BUT THE REMAINDER OF THE PLANS SHALL GOVERN OVER NOTES HEREON, AND SPECIAL PROVISIDNS SHALL GOVERN OVER ALL. SEE SPECIFICATIONS ARTICLE 105-4.

ENGLISH

JANUARY, 1990

STD. NO. SN

STATE	STATE PROJECT REFERENCE NO.	SHEET NO.
NC	B-5218	UO-1

TIP PROJECT: B-5218

CONTRACT:

See Sheet 1-A For Index of Sheets

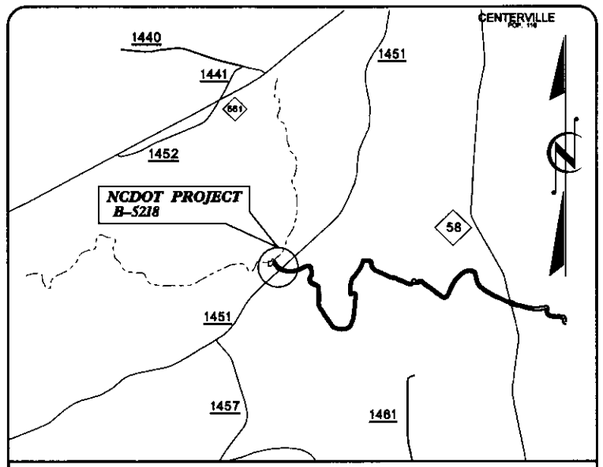

VICINITY MAP

STATE OF NORTH CAROLINA
DIVISION OF HIGHWAYS

UTILITIES BY OTHERS PLANS
FRANKLIN COUNTY

LOCATION: BRIDGE #61 OVER SANDY CREEK ON SR 1451 (LEONARD RD.)

TYPE OF WORK: UTILITIES RELOCATION

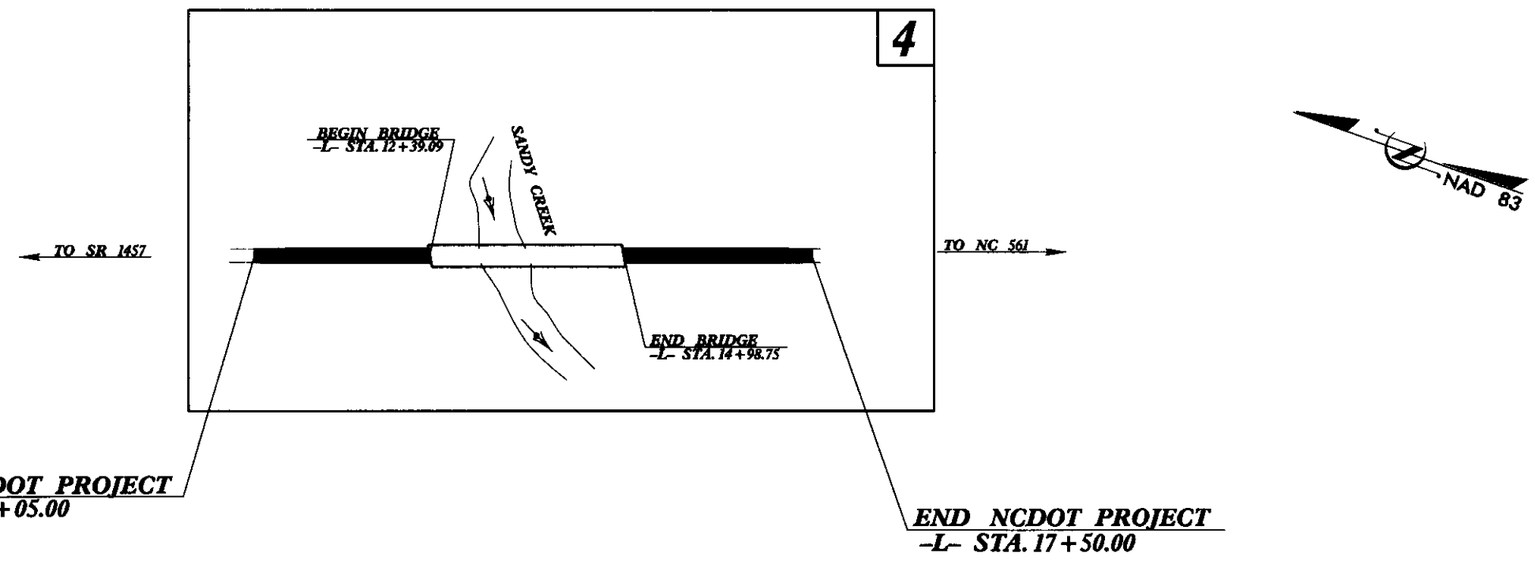

GRAPHIC SCALES

50 25 0 50 100
PLANS

50 25 0 50 100
PROFILE (HORIZONTAL)

10 5 0 10 20
PROFILE (VERTICAL)

INDEX OF SHEETS

SHEET NO.	DESCRIPTION
UO-1	TITLE SHEET
UO-2	UTILITIES BY OTHERS PLAN SHEET

UTILITY OWNERS ON PROJECT

1) PROGRESS ENERGY CAROLINAS, INC. (POWER/DISTRIBUTION)

2) CENTURYLINK (TELEPHONE)

559 JONES FRANKLIN ROAD
SUITE 164

Raleigh, N.C. 27606
Bus: 919 851 8077
Fax: 919 851 8107
License: F-0377

Prepared by

ETHERILL ENGINEERING

UTILITY COORDINATOR DANNY PURYEAR

FOR:

DIVISION OF HIGHWAYS
UTILITIES COORDINATION UNIT

1555 MAIL SERVICES CENTER
RALEIGH NC 27699-1555
PHONE (919) 250-4128
FAX (919) 250-4119

J. Robert Memory	STATE UTILITY AGENT
David A. Boyd	AREA UTILITY AGENT
Steven L. Cummings	UTILITY AGENT

$$$$$$SYSTIME$$$$$$
$$$$$$$$$$$$$$$$$$DGN$$$$$$$$$$$$$$$$$$
$$$$$$USERNAME$$$$

PROJECT REFERENCE NO.	SHEET NO.
B-5218	UO-2

UTILITIES BY OTHERS

NOTE:
ALL PROPOSED UTILITY WORK SHOWN ON THIS SHEET WILL BE DONE BY OTHERS

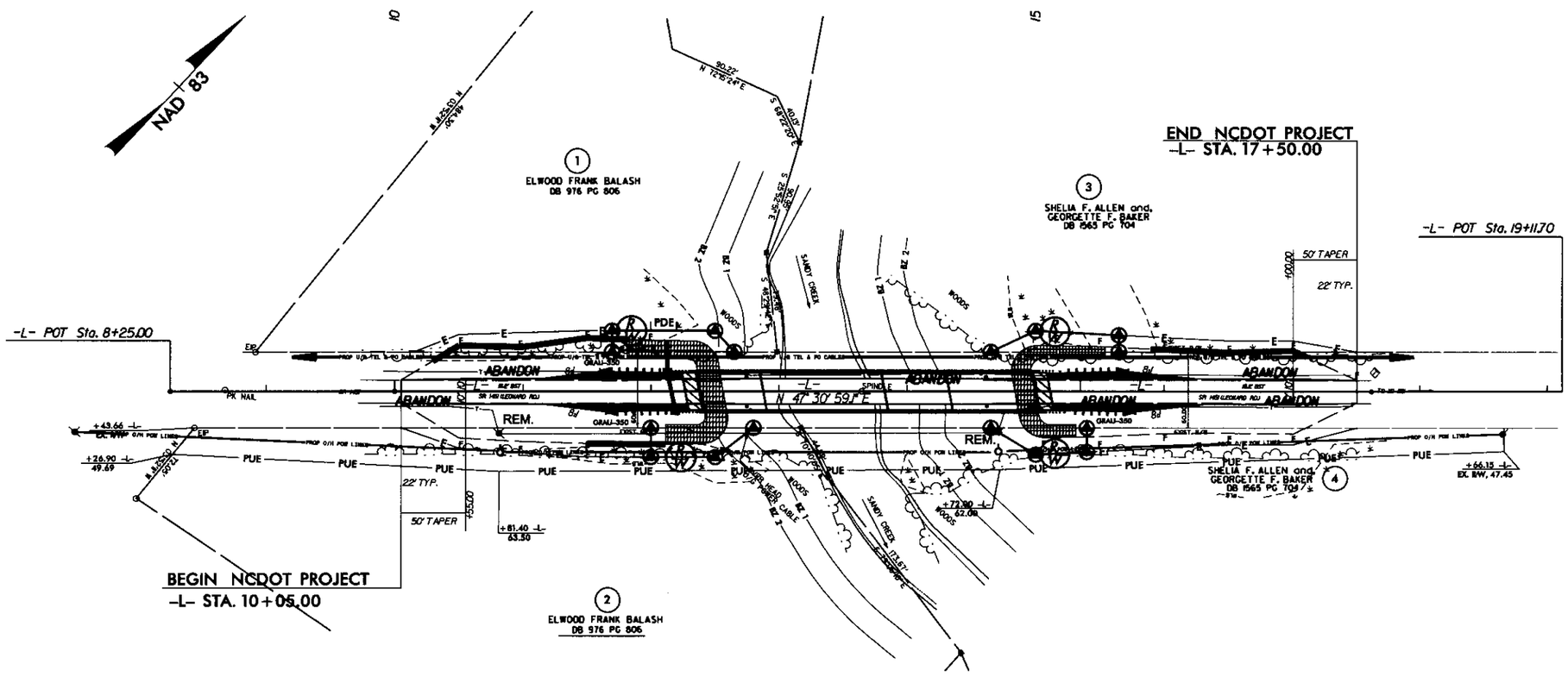

5/14/99