STATE	STATE PROJECT REFERENCE NO.	SHEET NO.	TOTAL SHEETS
N.C.	BK-5114		23
MECKLENBURG COUNTY #59			

WBS PROJ. NO.	F.A. PROJ. NO.	DESCRIPTION
42561.1.1		P.E.
42561.1.3		CONST

STATE OF NORTH CAROLINA
DIVISION OF HIGHWAYS

MECKLENBURG COUNTY

LOCATION: BRIDGE NO. 59 ON SR 2826 OVER REEDY CREEK

TYPE OF WORK: GRADING, DRAINAGE, PAVING, STRUCTURE, GUARDRAIL, STRUCTURE, TRAFFIC CONTROL AND EROSION CONTROL

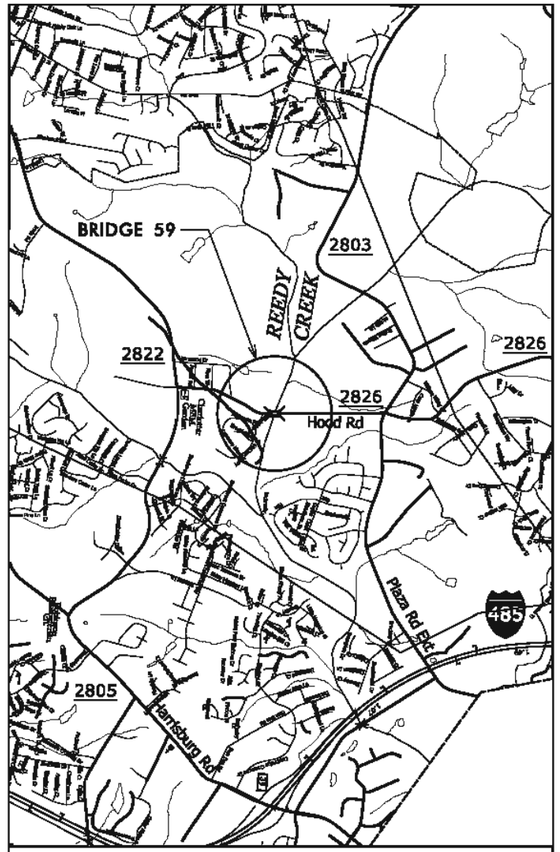

VICINITY MAP

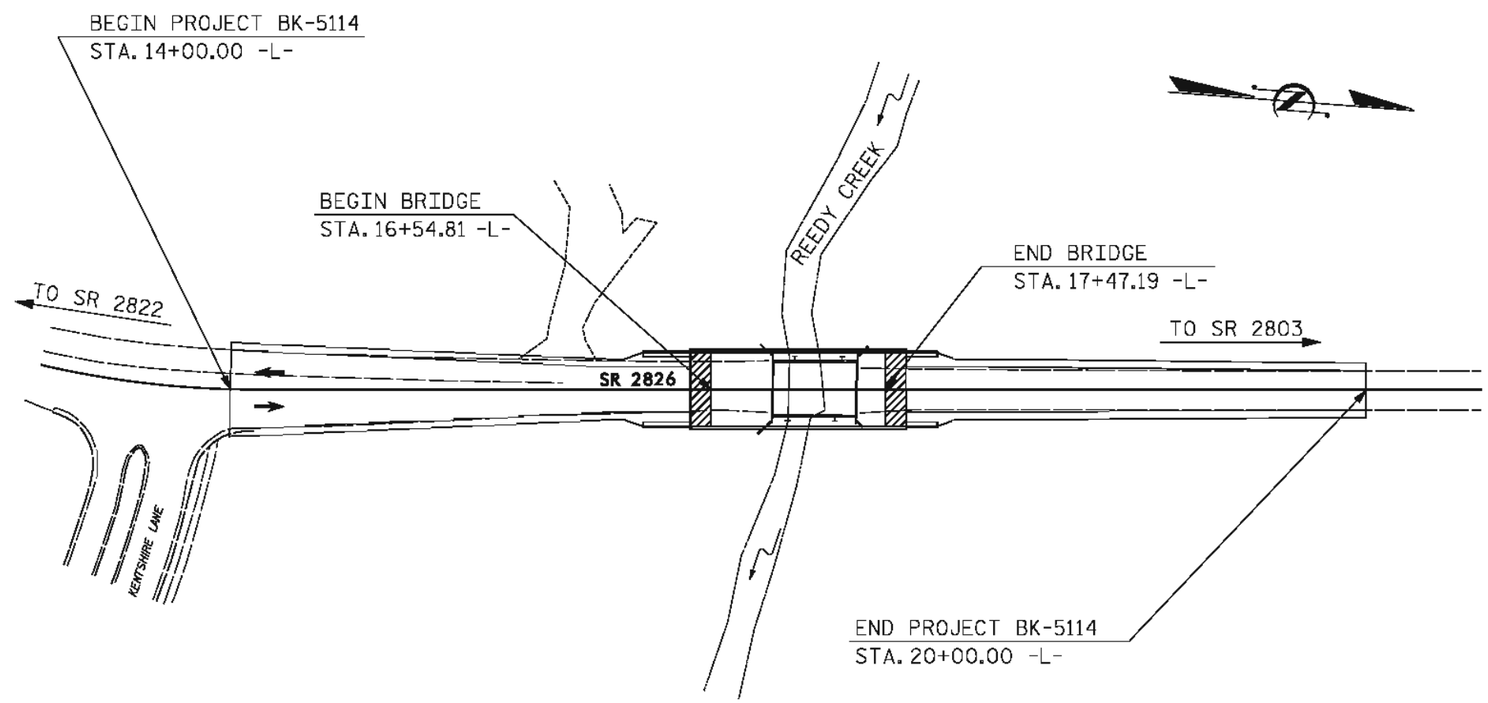

STRUCTURES

PROJECT LENGTH

LENGTH ROADWAY STATE PROJECT BK-5126	=	0.114 MILES
LENGTH STRUCTURES STATE PROJECT BK-5126	=	0.017 MILES
TOTAL LENGTH STATE PROJECT BK-5126	=	0.114 MILES

Prepared in the Office of:
Florence & Hutcheson
CONSULTING ENGINEERS

for the
NCDOT STRUCTURES MANAGEMENT UNIT

2012 STANDARD SPECIFICATIONS

LETTING DATE:
JUNE 28, 2012

RICK NELSON, P.E.
PROJECT ENGINEER

FARZIN ASEFNIA, P.E.
PROJECT DESIGN ENGINEER

NORTH CAROLINA PROFESSIONAL SEAL 20532 ENGINEER JAMES E. MONDOFI
5-4-12

DIVISION OF HIGHWAYS
STATE OF NORTH CAROLINA

P.E.
STATE HIGHWAY DESIGN ENGINEER

TIP PROJECT: BK-5114

CONTRACT: DO00153

5/7/2012
P:\NCMA\Div10\Meckln_59\MAI0007B\Structures\bk5114_sd_TS.dgn
Florence & Hutcheson, Inc.

09/08/09

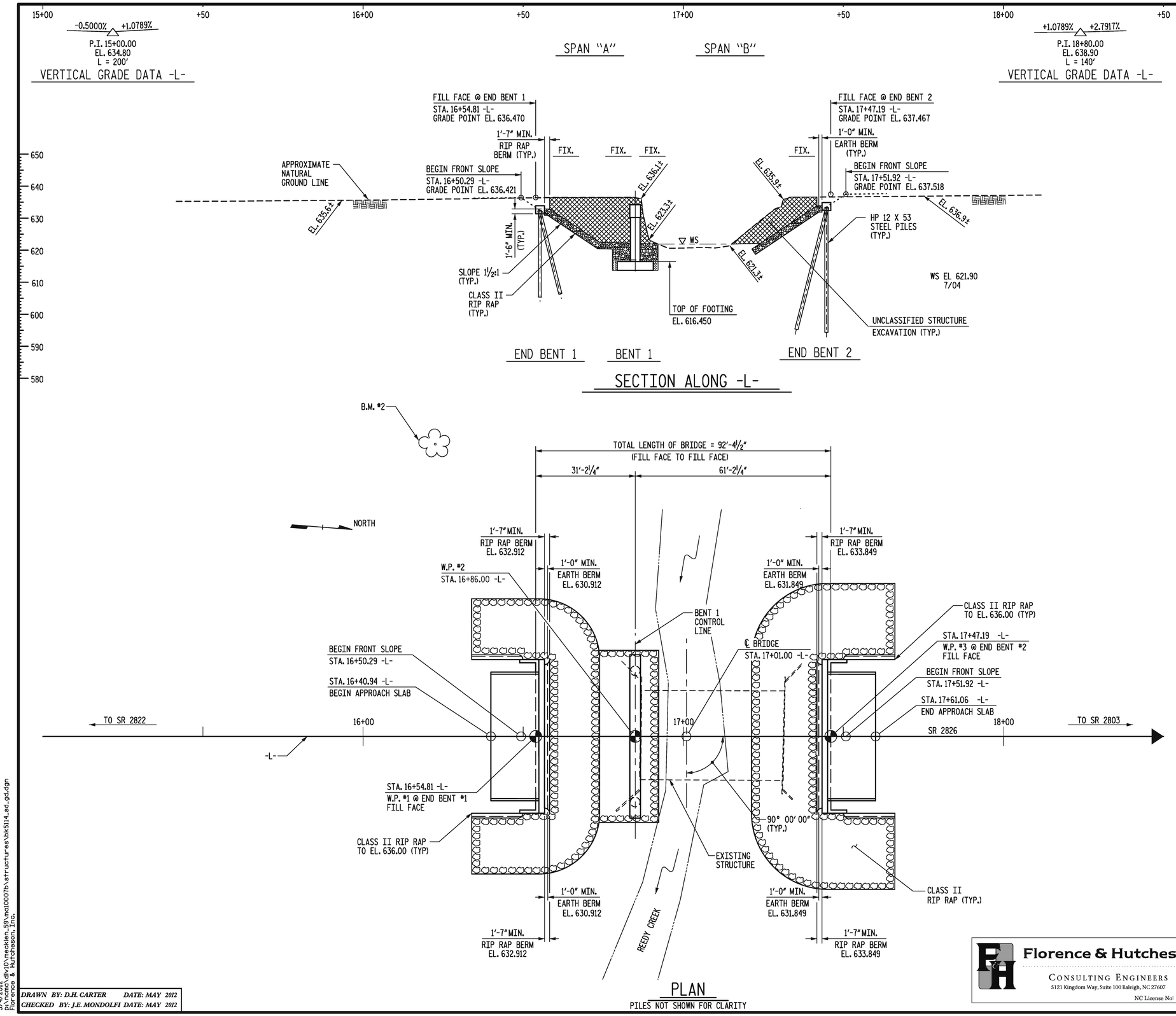

NOTES

THIS STRUCTURE HAS BEEN DESIGNED IN ACCORDANCE WITH FHWA'S TECHNICAL ADVISORY T5140.20 (SCOUR AT BRIDGES).

FOR OTHER DESIGN DATA AND GENERAL NOTES, SEE SHEET SN.

FOR FALSEWORK AND FORMWORK, SEE SPECIAL PROVISIONS.

INASMUCH AS THE PAINT SYSTEM ON THE EXISTING STRUCTURAL STEEL CONTAINS LEAD, THE CONTRACTOR'S ATTENTION IS DIRECTED TO ARTICLE 107-1 OF THE STANDARD SPECIFICATIONS. ANY COST RESULTING FROM COMPLIANCE WITH APPLICABLE STATE OR FEDERAL REGULATIONS PERTAINING TO HANDLING OF MATERIALS CONTAINING LEAD BASED PAINT SHALL BE INCLUDED IN THE BID PRICE FOR "REMOVAL OF EXISTING STRUCTURE".

THE MATERIAL IN THE CROSS HATCHED AREA SHALL BE EXCAVATED FOR A DISTANCE OF 45 FEET EACH SIDE OF CENTERLINE ROADWAY AS DIRECTED BY THE ENGINEER. THIS WORK WILL BE PAID FOR AS "UNCLASSIFIED STRUCTURE EXCAVATION", LUMP SUM.

THE SUBSTRUCTURE OF THE EXISTING BRIDGE INDICATED ON THE PLANS IS FROM THE BEST INFORMATION AVAILABLE. SINCE THIS INFORMATION IS SHOWN FOR THE CONVENIENCE OF THE CONTRACTOR, THE CONTRACTOR SHALL HAVE NO CLAIM WHATSOEVER AGAINST THE DEPARTMENT OF TRANSPORTATION FOR ANY DELAYS OR ADDITIONAL COST INCURRED BASED ON DIFFERENCES BETWEEN THE EXISTING BRIDGE SUBSTRUCTURE SHOWN ON THE PLANS AND THE ACTUAL CONDITIONS AT THE PROJECT SITE.

REMOVAL OF THE EXISTING BRIDGE SHALL BE PERFORMED SO AS NOT TO ALLOW DEBRIS TO FALL INTO THE WATER. THE CONTRACTOR SHALL REMOVE THE BRIDGE AND SUBMIT PLANS FOR DEMOLITION IN ACCORDANCE WITH ARTICLE 402-2 OF THE STANDARD SPECIFICATIONS.

FOR PILES, SEE SPECIAL PROVISIONS.

STEEL PILE POINTS ARE REQUIRED FOR PILES AT END BENT NO. 1 AND END BENT NO. 2. SEE SPECIAL PROVISIONS FOR STEEL PILE POINTS.

THE EXISTING STRUCTURE CONSISTING OF 1 SPAN TOTALING 45.5± FEET LONG STEEL BEAM SPANS; 28.0± FEET CLEAR ROADWAY WITH 10 GAUGE STEEL PLANK DECK AND 5" ASPHALT OVERLAY: ON TIMBER CAPS WITH TIMBER PILES AT END BENT 1 AND CONCRETE ENCASED TIMBER PILES AT END BENT 2, LOCATED ON THE PROPOSED ALIGMENT SHALL BE REMOVED. THE EXISTING BRIDGE IS PRESENTLY POSTED BELOW THE LEGAL LOAD LIMIT. SHOULD THE STRUCTURAL INTEGRITY OF THE BRIDGE FURTHER DETERIORATE, THIS LOAD LIMITATION MAY BE REDUCED AS FOUND NECESSARY DURING THE LIFE OF THE PROJECT.

THE SCOUR CRITICAL ELEVATION FOR BENT NO. 1 IS BOTTOM OF FOOTING EL. 613.689 FT. THE SCOUR CRITICAL ELEVATION IS FOR USE BY MAINTENANCE FORCES TO MONITOR POSSIBLE SCOUR PROBLEMS DURING THE LIFE OF THE STRUCTURE.

THE REQUIRED BEARING CAPACITY OF THE SPREAD FOOTING(S) AT INTERIOR BENT NO. 1 IS 2.5 TSF. THE REQUIRED BEARING CAPACITY SHALL BE VERIFIED.

TO PROVIDE PROTECTION FROM POSSIBLE SCOUR, THE FOOTING(S) SHALL NOT BE CONSTRUCTED AT AN ELEVATION HIGHER THAN SHOWN ON THE PLANS.

PILES AT END BENT NO. 1 SHALL BE DRIVEN TO AN ELEVATION NO HIGHER THAN EL. 611.0 FT. AND SATISFY THE ULTIMATE BEARING CAPACITY OF 100 TONS EACH.

PILES AT END BENT NO. 2 SHALL BE DRIVEN TO AN ELEVATION NO HIGHER THAN EL. 623.0 FT. AND SATISFY THE ULTIMATE BEARING CAPACITY OF 100 TONS EACH.

WHEN DRIVING PILES, THE MAXIMUM BLOW COUNT SHALL NOT BE EXCEEDED.

THE STEEL PILES SHALL BE GALVANIZED IN ACCORDANCE WITH SECTION 1076 OF THE STANDARD SPECIFICATIONS.

DELINEATORS ON BARRIER RAIL AND ON STEEL BEAM GUARDRAIL SHALL BE INCLUDED IN THE PRICE BID FOR STEEL BEAM GUARDRAILS.

FOR EROSION CONTROL MEASURES, SEE EROSION CONTROL PLANS.

NOTES CONTINUED ON SHEET S-2.

PROJECT NO. 42561
COUNTY: MECKLENBURG
STATION: 17+01.00 -L-
SHEET 1 OF 2 REPLACES BRIDGE NO. 59

STATE OF NORTH CAROLINA
DEPARTMENT OF TRANSPORTATION
RALEIGH

BRIDGE NO. 59 ON SR 2826
OVER REEDY CREEK

REVISIONS						SHEET NO.
NO.	BY	DATE	NO.	BY	DATE	S-1
1			3			TOTAL SHEETS
2			4			14

NORTH CAROLINA PROFESSIONAL SEAL 19331 ENGINEER JAMES E. MONDOLFI
5-4-12

Florence & Hutcheson
CONSULTING ENGINEERS
5121 Kingdom Way, Suite 100 Raleigh, NC 27607
NC License No: F-0258

DRAWN BY: D.H. CARTER DATE: MAY 2012
CHECKED BY: J.E. MONDOLFI DATE: MAY 2012

5/4/2012
p:\hcmd\div10\mecklen_59\mal0007b\structures\bk5114_sd_gd.dgn
Florence & Hutcheson, Inc.

BENCH MARK: B.M. #2 - 60-D NAIL IN 75" LAUREL OAK, 138.30' LT OF STA. 16+21.67 -L-, EL. 632.81.

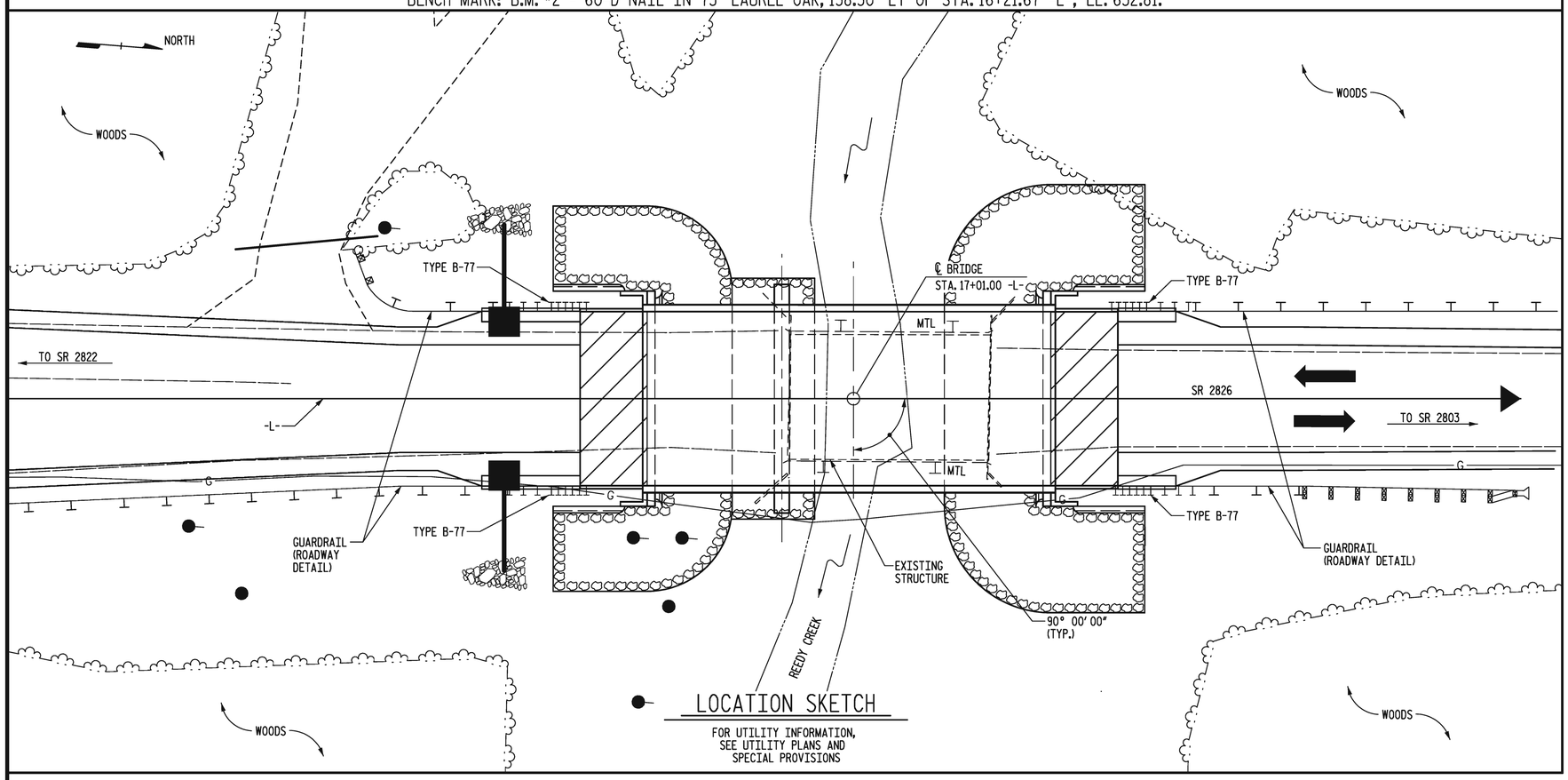

LOCATION SKETCH

FOR UTILITY INFORMATION, SEE UTILITY PLANS AND SPECIAL PROVISIONS

NOTES (CONT.)

ASPHALT WEARING SURFACE IS INCLUDED IN ROADWAY QUANTITIES.

FOR SUBMITTAL OF WORKING DRAWINGS, SEE SPECIAL PROVISIONS.

FOR CRANE SAFETY, SEE SPECIAL PROVISIONS.

FOR GROUT FOR STRUCTURES, SEE SPECIAL PROVISIONS.

TOTAL BILL OF MATERIAL

	REMOVAL OF EXISTING STRUCTURE AT STATION 17+01.00 -L-	FOUNDATION EXCAVATION	UNCLASSIFIED STRUUCTURE EXCAVATION	BRIDGE APPROACH FILL SUBREGIONAL TIER	CLASS A CONCRETE	BRIDGE APPROACH SLABS	REINFORCING STEEL (BRIDGE)	SPIRAL COLUMN REINFORCING STEEL	HP 12 X 53 GALVANIZED STEEL PILES		STEEL PILE POINTS	CONCRETE BARRIER RAIL	RIP RAP CLASS II	GEOTEXTILE FOR DRAINAGE	ELASTOMERIC BEARINGS	3'-0" X 1'-9" PRESTRESSED CONCRETE CORED SLABS	
	LUMP SUM	LUMP SUM	LUMP SUM	LUMP SUM	CU. YD.	LUMP SUM	LB.	LB.	NO.	LIN. FT.	NO.	LIN. FT.	TON	SQ. YD.	LUMP SUM	NO.	LIN. FT.
SUPERSTRUCTURE												180.25				28	1,260
END BENT 1					14.4		2,510		7	175	7		352	391			
BENT 1					71.6		10,310	975									
END BENT 2					14.4		2,510		7	105	7		339	377			
TOTAL	LUMP SUM	LUMP SUM	LUMP SUM	LUMP SUM	100.4	LUMP SUM	15,330	975	14	280	14	180.25	691	768	LUMP SUM	28	1,260

PRELIMINARY PLANS
DO NOT USE FOR CONSTRUCTION

PROJECT NO. 42561
COUNTY: MECKLENBURG
STATION: 17+01.00 -L-
SHEET 2 OF 2

STATE OF NORTH CAROLINA
DEPARTMENT OF TRANSPORTATION
RALEIGH

BRIDGE NO. 59 ON SR 2826
OVER REEDY CREEK

Florence & Hutcheson
CONSULTING ENGINEERS
5121 Kingdom Way, Suite 100 Raleigh, NC 27607
NC License No: F-0258

NORTH CAROLINA PROFESSIONAL SEAL ENGINEER JAMES E. MONDOLFI
5-4-12

REVISIONS						SHEET NO.
NO.	BY	DATE	NO.	BY	DATE	S-2
1			3			TOTAL SHEETS
2			4			14

DRAWN BY: D.H. CARTER DATE: MAY 2012
CHECKED BY: J.E. MONDOLFI DATE: MAY 2012

5/4/2012
p:\rcmd\div10\meckln_59\mal0007b\structures\bk5114_sd_ls.dgn
Florence & Hutcheson, Inc.

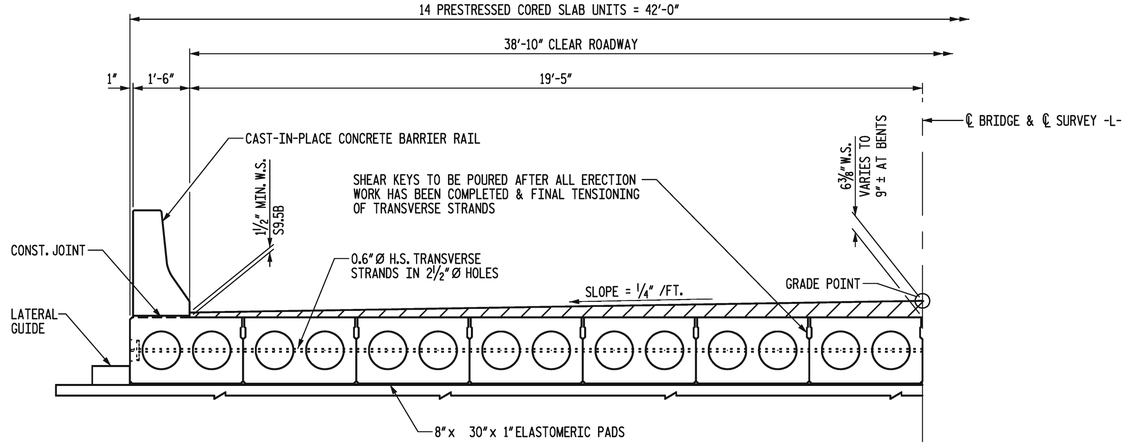

TYPICAL HALF SECTION

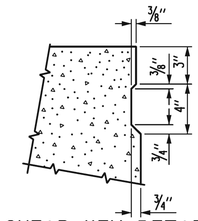

SHEAR KEY DETAIL

NOTE: OMIT SHEAR KEY ON OUTSIDE FACE OF EXTERIOR CORED SLABS.

GENERAL NOTES

ASSUMED LIVE LOAD = HS25 OR ALTERNATE LOADING.

CONCRETE: f'c = 5000 psi, 30' SPAN ONLY
✱ CONCRETE: f'c = 4000 psi, 30' SPAN ONLY
✱ CONCRETE: f'c = 7000 psi, 60' SPAN ONLY
CONCRETE: f'c = 5400 psi, 60' SPAN ONLY
✱ (COMPRESSIVE STRENGTH @ TRANSFER OF STRESSING FORCE.)

ALL PRESTRESS STRANDS SHALL BE 7 WIRE, LOW RELAXATION, HIGH STRENGTH CABLES IN ACCORDANCE WITH THE SPECIFICATIONS.

SIZE TYPE	AREA	ULTIMATE STR.
0.6"Ø HIGH STR.	0.217 □" PER CABLE	58,600#

APPLIED FORCE
43,950# PER CABLE

ALL MATERIAL AND WORKMANSHIP SHALL COMPLY WITH THE APPLICABLE REQUIREMENTS OF THE STANDARD SPECIFICATIONS FOR ROADS AND STRUCTURES OF THE NC DEPARTMENT OF TRANSPORTATION DATED JULY 2006 AND WITH THE SPECIAL PROVISIONS.

THE ULTIMATE STRENGTH OF THE CORED SLAB UNIT MUST MEET THE REQUIREMENTS OF THE APPLICABLE AASHTO SPECIFICATIONS.

STRANDS SHALL BE CUT FLUSH WITH ENDS OF SLABS AND EPOXY COATED.

A POSITIVE HOLD DOWN SYSTEM MUST BE EMPLOYED TO PREVENT VOIDS FROM RISING.

UNLESS OTHERWISE NOTED ON THE PLANS, ALL EXPOSED CORNERS ON STRUCTURES SHALL BE CHAMFERED ¾".

SHEATH CHART	
SPAN LENGTH	NUMBER OF SHEATHED STRANDS PER SLAB SECTION
60'	✱ 2 @ 2"
60'	✱✱ 2 @ 2"
60'	✱✱✱ 2 @ 2"

✱ BOND SHALL BE BROKEN ON THESE STRANDS FOR A DISTANCE OF 4 FEET FROM THE END OF THE SLAB

✱✱ BOND SHALL BE BROKEN ON THESE STRANDS FOR A DISTANCE OF 8 FEET FROM THE END OF THE SLAB

✱✱✱ BOND SHALL BE BROKEN ON THESE STRANDS FOR A DISTANCE OF 12 FEET FROM THE END OF THE SLAB

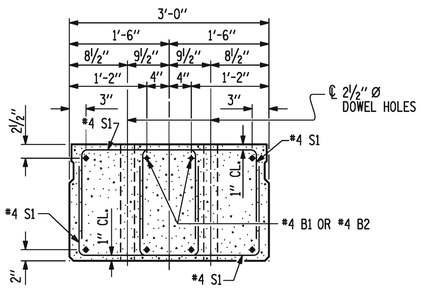

END ELEVATION

SHOWING PLACEMENT OF DOUBLE STIRRUPS AND LOCATION OF DOWEL HOLES.
(STRAND LAYOUT NOT SHOWN.)
INTERIOR SLAB SECTION SHOWN, EXTERIOR SLAB SECTION SIMILAR EXCEPT SHEAR KEY LOCATION.

THE 2½" DOWEL HOLES AT FIXED ENDS OF SLAB SECTIONS SHALL BE FILLED WITH GROUT.

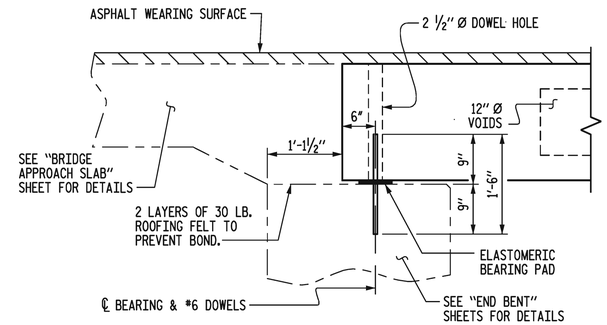

SECTION AT END BENT

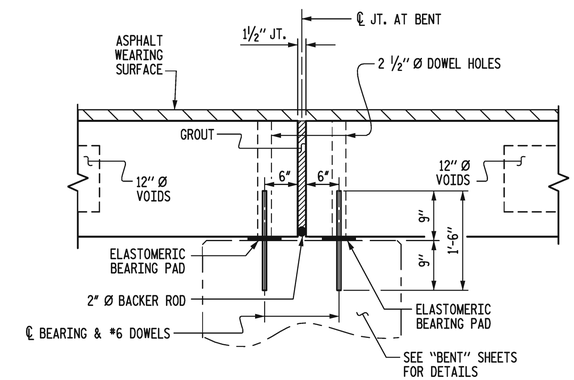

SECTION AT BENT

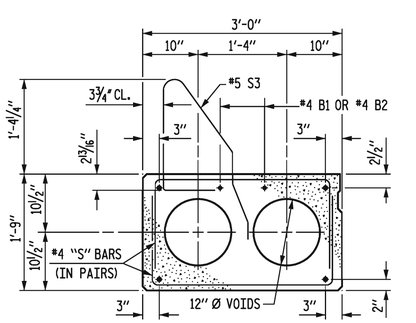

EXTERIOR SLAB SECTION

(FOR PRESTRESSED STRAND LAYOUT, SEE INTERIOR SLAB SECTIONS

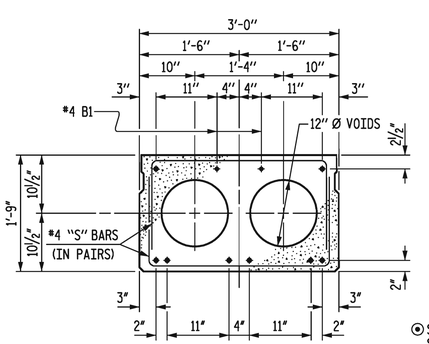

30' SPAN-INTERIOR SLAB SECTION

8 - 0.6" Ø H.S. STRANDS

⊙ STRAND IS SHEATHED. SEE SHEATH CHART.

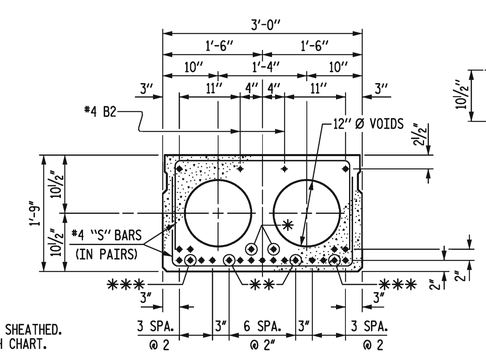

60' SPAN-INTERIOR SLAB SECTION

23 - 0.6" Ø H.S. STRANDS

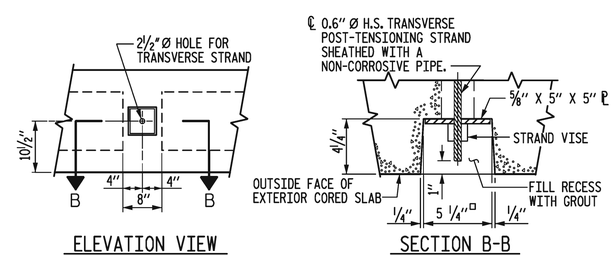

GROUTED RECESS AT END OF POST-TENSIONED STRAND - CORED SLABS

PROJECT NO. 42561
COUNTY: MECKLENBURG
STATION: 17+01.00 -L-
SHEET 1 OF 3

STATE OF NORTH CAROLINA
DEPARTMENT OF TRANSPORTATION
RALEIGH

STANDARD PRESTRESSED CORED SLAB
30' AND 60' SPANS
38'-10" CLEAR ROADWAY - 90 SKEW

Florence & Hutcheson
CONSULTING ENGINEERS
5121 Kingdom Way, Suite 100 Raleigh, NC 27607
NC License No: F-0258

NORTH CAROLINA PROFESSIONAL SEAL 19931 ENGINEER JAMES E. MONDOLFI
5-4-12

REVISIONS						SHEET NO.
NO.	BY	DATE	NO.	BY	DATE	S-3
1			3			TOTAL SHEETS
2			4			14

DRAWN BY: D.H. CARTER DATE: MAY 2012
CHECKED BY: J.E. MONDOLFI DATE: MAY 2012

5/4/2012
p:\rdna\dv10\meckien_59\m0007b\structures\bk5114_sd_cs1.dgn
Florence & Hutcheson, Inc.

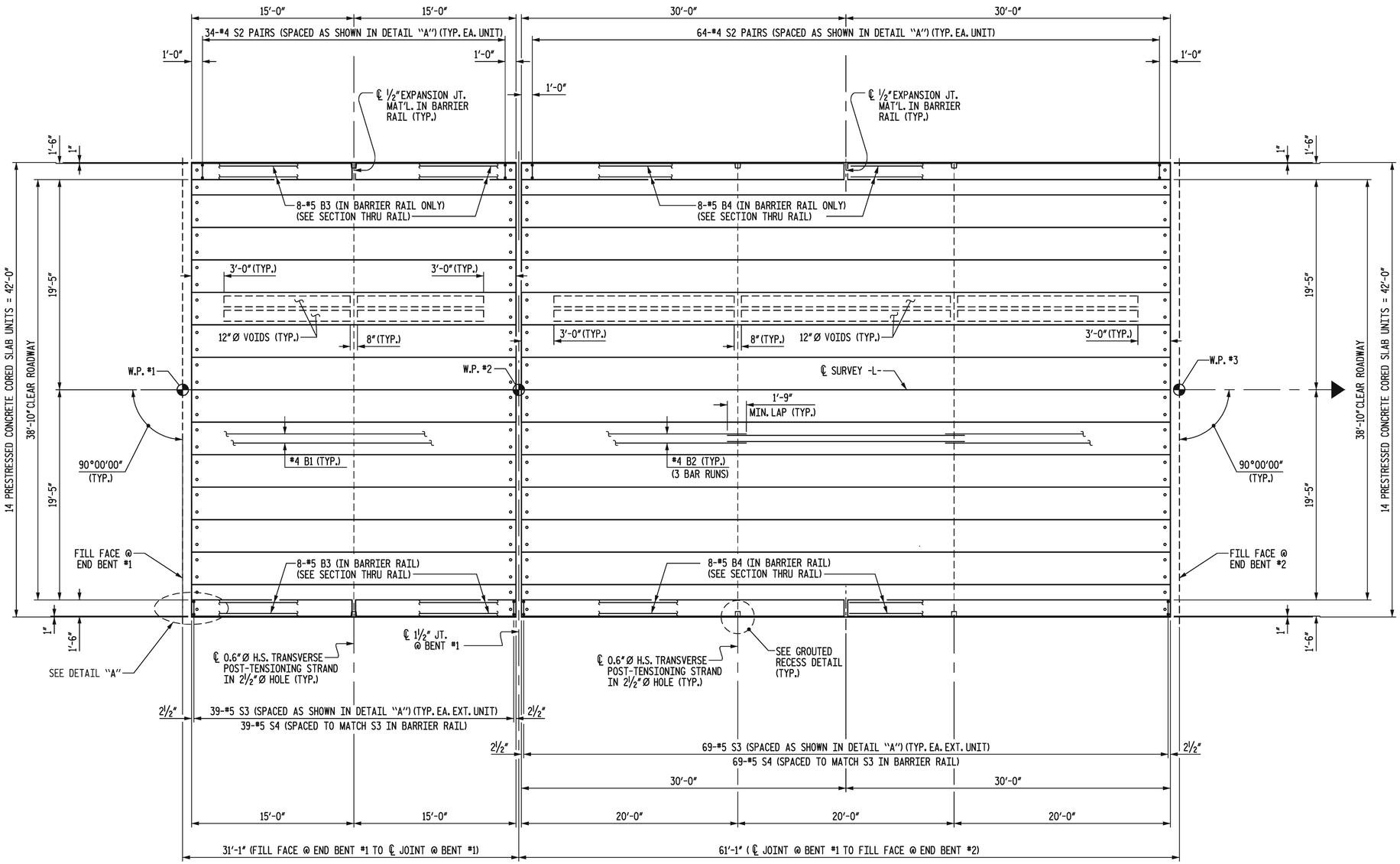

SPAN "A"

SPAN "B"

PLAN OF SPANS

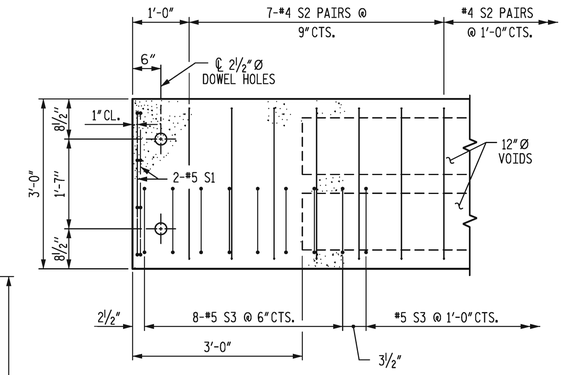

DETAIL "A"

NOTE: EXTERIOR UNIT SHOWN - INTERIOR UNIT SIMILAR EXCEPT OMIT #5 S3 BARS.

PROJECT NO. 42561
COUNTY: MECKLENBURG
STATION: 17+01.00 -L-

SHEET 2 OF 3

STATE OF NORTH CAROLINA
DEPARTMENT OF TRANSPORTATION
RALEIGH

PLAN OF SPANS
CORED SLAB DETAILS
SPANS "A" & "B"

REVISIONS						SHEET NO.
NO.	BY	DATE	NO.	BY	DATE	S-4
1			3			TOTAL SHEETS
2			4			14

Florence & Hutcheson
CONSULTING ENGINEERS
5121 Kingdom Way, Suite 100 Raleigh, NC 27607
NC License No: F-0258

NORTH CAROLINA PROFESSIONAL SEAL ENGINEER JAMES E. MONDOLFI
5-4-12

DRAWN BY: D.H. CARTER DATE: MAY 2012
CHECKED BY: J.E. MONDOLFI DATE: MAY 2012

5/4/2012
P:\roma\div10\meckien_59\mdl0007b\structures\bk5114_sd_cs2.dgn
Florence & Hutcheson, Inc.

BAR TYPES

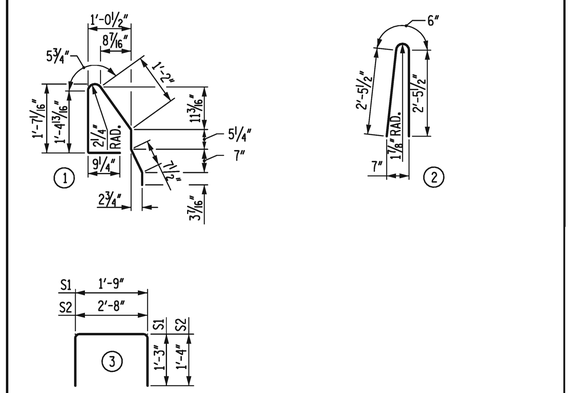

ALL BAR DIMENSIONS ARE OUT TO OUT.

DEAD LOAD DEFLECTION AND CAMBER

	SPAN "A"	SPAN "B"
	3'-0" x 1'-9"	3'-0" x 1'-9"
	0.6" Ø L.R. STRAND	0.6" Ø L.R. STRAND
CAMBER (SLAB ALONE IN PLACE)	0.245" ↑	3.302" ↑
DEFLECTION DUE TO SUPERIMPOSED DEAD LOAD **	0.052" ↓	0.648" ↓
FINAL CAMBER	0.193" ↑	2.654" ↑

** INCLUDES FUTURE WEARING SURFACE

BILL OF MATERIAL FOR ONE 30'-0" INTERIOR CORED SLAB SECTION

BAR	NO.	SIZE	TYPE	LENGTH	WEIGHT
B1	2	#4	STR	29'-8"	40
S1	16	#5	3	4'-3"	71
S2	68	#4	3	5'-4"	242
REINFORCING STEEL				LBS.	353
5000 P.S.I. CONCRETE				C.Y.	4.0
0.6" Ø L.R. STRANDS				NO.	8

BILL OF MATERIAL FOR ONE 60'-0" INTERIOR CORED SLAB SECTION

BAR	NO.	SIZE	TYPE	LENGTH	WEIGHT
B2	6	#4	STR	21'-1"	85
S1	16	#5	3	4'-3"	71
S2	128	#4	3	5'-4"	456
REINFORCING STEEL				LBS.	612
7000 P.S.I. CONCRETE				C.Y.	8.0
0.6" Ø L.R. STRANDS				NO.	23

BILL OF MATERIAL FOR CONCRETE BARRIER RAIL

BAR	NO.	SIZE	TYPE	LENGTH	WEIGHT
* B3	32	#5	STR	14'-11"	498
* B4	32	#5	STR	29'-7"	987
* S4	216	#5	2	5'-5"	1,220
*EPOXY COATED REINFORCING STEEL				LBS.	2,705
CLASS AA CONCRETE				C.Y.	20.3
TOTAL LIN. FT. OF CONCRETE BARRIER RAIL					180.25

GRADE 270 STRANDS

	0.6" Ø L.R.
AREA (SQUARE INCHES)	0.217
ULTIMATE STRENGTH (LBS. PER STRAND)	58,600
APPLIED PRESTRESS (LBS. PER STRAND)	43,950

BILL OF MATERIAL FOR ONE 30'-0" EXTERIOR CORED SLAB SECTION

BAR	NO.	SIZE	TYPE	LENGTH	WEIGHT
B1	2	#4	STR	29'-8"	40
S1	16	#5	3	4'-3"	71
S2	68	#4	3	5'-4"	242
* S3	39	#5	1	5'-2"	210
REINFORCING STEEL				LBS.	353
*EPOXY COATED REINFORCING STEEL				LBS.	210
5000 P.S.I. CONCRETE				C.Y.	4.0
0.6" Ø L.R. STRANDS				NO.	8

BILL OF MATERIAL FOR ONE 60'-0" EXTERIOR CORED SLAB SECTION

BAR	NO.	SIZE	TYPE	LENGTH	WEIGHT
B2	6	#4	STR	21'-1"	85
S1	16	#5	3	4'-3"	71
S2	128	#4	3	5'-4"	456
* S3	69	#5	1	5'-2"	372
REINFORCING STEEL				LBS.	612
*EPOXY COATED REINFORCING STEEL				LBS.	372
7000 P.S.I. CONCRETE				C.Y.	8.0
0.6" Ø L.R. STRANDS				NO.	23

CORED SLABS REQUIRED

	NUMBER		LENGTH		TOTAL LENGTH
	SPAN A	SPAN B	SPAN A	SPAN B	
EXTERIOR C.S.	2	2	30'-0"	60'-0"	180'-0"
INTERIOR C.S.	12	12	30'-0"	60'-0"	1080'-0"

SUMMARY FOR EXTERIOR CORED SLAB SECTIONS

		SPAN "A"	SPAN "B"	TOTAL
REINFORCING STEEL	LBS.	706	1,224	1,930
*EPOXY COATED REINFORCING STEEL	LBS.	420	744	1,164
5000 P.S.I. CONCRETE	C.Y.	8.0	--	8.0
7000 P.S.I. CONCRETE (SPAN B)	C.Y.	--	16.0	16.0
0.6" Ø L.R. STRANDS	NO.	16	46	62

SUMMARY FOR INTERIOR CORED SLAB SECTIONS

		SPAN "A"	SPAN "B"	TOTAL
REINFORCING STEEL	LBS.	4,236	7,344	15,580
5000 P.S.I. CONCRETE	C.Y.	48.0	--	48.0
7000 P.S.I. CONCRETE (SPAN B)	C.Y.	--	96.0	96.0
0.6" Ø L.R. STRANDS	NO.	96	276	372

NOTES

ALL PRESTRESSING STRANDS SHALL BE 7-WIRE LOW RELAXATION GRADE 270 STRANDS AND SHALL CONFORM TO AASHTO M203 EXCEPT FOR SAMPLING REQUIREMENTS WHICH SHALL BE IN ACCORDANCE WITH THE STANDARD SPECIFICATIONS.

ALL REINFORCING STEEL CAST WITH THE CORED SLAB SECTIONS SHALL BE GRADE 60 AND SHALL BE INCLUDED IN THE UNIT PRICE BID FOR PRESTRESSED CONCRETE CORED SLABS.

RECESSES FOR TRANSVERSE STRANDS SHALL BE GROUTED AFTER THE TENSIONING OF THE STRANDS.

THE 2½" Ø DOWEL HOLES AT FIXED ENDS OF SLAB SECTIONS SHALL BE FILLED WITH NON-SHRINK GROUT.

THE BACKER ROD SHALL CONFORM TO THE REQUIREMENTS OF TYPE M BOND BREAKER. SEE SECTION 1028 OF THE STANDARD SPECIFICATIONS.

WHEN CORED SLABS ARE CAST, A POSITIVE HOLD-DOWN SYSTEM SHALL BE EMPLOYED TO PREVENT VOIDS FROM RISING OR MOVING SIDEWAYS. THIS SYSTEM SHALL BE DESIGNED TO BE LEFT IN PLACE UNTIL THE CONCRETE HAS REACHED RELEASE STRENGTH. AT LEAST THREE WEEKS PRIOR TO CASTING CORED SLABS, THE CONTRACTOR SHALL SUBMIT TO THE ENGINEER FOR REVIEW AND COMMENT, DETAILED DRAWINGS OF THE PROPOSED HOLD-DOWN SYSTEM. IN ADDITION TO STRUCTURAL DETAILS, LOCATION AND SPACING OF THE HOLD-DOWNS SHALL BE INDICATED.

THE TRANSFER OF LOAD FROM THE ANCHORAGES TO THE CORED SLAB UNIT SHALL BE DONE WHEN THE CONCRETE HAS REACHED A COMPRESSIVE STRENGTH OF NOT LESS THAN 4000 PSI FOR 30' SPANS AND 5600 PSI FOR 60' SPANS.

ALL REINFORCING STEEL IN BARRIER RAILS SHALL BE EPOXY COATED.

PRESTRESSING STRANDS SHALL BE CUT FLUSH WITH THE CORED SLAB UNIT ENDS.

APPLY EPOXY PROTECTIVE COATING TO CORED SLAB UNIT ENDS.

VERTICAL GROOVED CONTRACTION JOINTS, ½" IN DEPTH, SHALL BE TOOLED IN ALL EXPOSED FACES OF THE BARRIER RAIL AND IN ACCORDANCE WITH ARTICLE 825-10(B) OF THE STANDARD SPECIFICATIONS. A VERTICAL CONTRACTION JOINT SHALL BE LOCATED AT EACH THIRD POINT BETWEEN BARRIER RAIL EXPANSION JOINTS.

TRANSVERSE POST-TENSIONING OF THE CORED SLAB UNITS SHALL BE DONE IN ACCORDANCE WITH THE STANDARD SPECIFICATIONS, EXCEPT THAT THE STRANDS SHALL BE 0.60Ø AND TENSIONED TO 43,950 POUNDS.

THE MINIMUM AND MAXIMUM HEIGHTS OF THE BARRIER RAIL ARE SHOWN. THE HEIGHT OF THE BARRIER RAIL VARIES WHILE THE TOP OF THE RAIL FOLLOWS THE PROFILE OF THE GUTTERLINE.

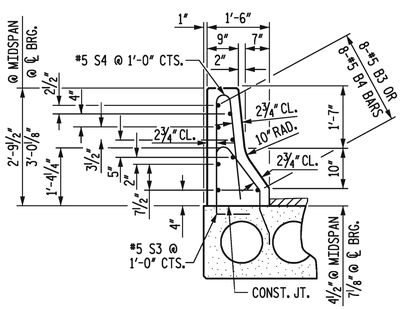

SECTION THRU RAIL

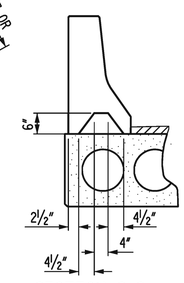

SECTION S-S

AT DAM IN OPEN JOINT (THIS IS TO BE USED ONLY WHEN SLIP FORM IS USED)

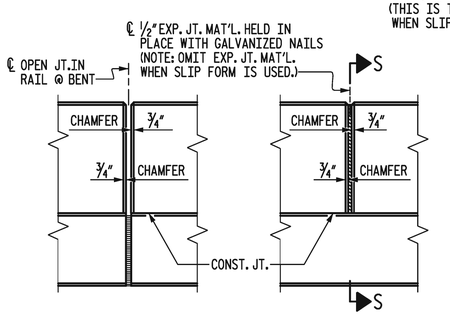

ELEVATION AT EXPANSION JOINTS

BARRIER RAIL DETAILS

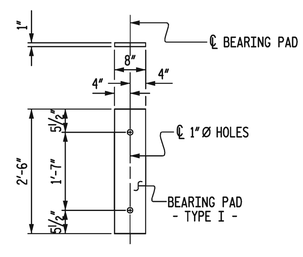

FIXED END

(TYPE I - 56 REQ'D.)

ELASTOMERIC BEARING DETAILS

PROJECT NO. 42561
COUNTY: MECKLENBURG
STATION: 17+01.00 -L-

SHEET 3 OF 3

STATE OF NORTH CAROLINA
DEPARTMENT OF TRANSPORTATION
RALEIGH

BILL OF MATERIALS

Florence & Hutcheson
CONSULTING ENGINEERS
5121 Kingdom Way, Suite 100 Raleigh, NC 27607
NC License No: F-0258

NORTH CAROLINA PROFESSIONAL SEAL ENGINEER JAMES E. MONDOLFI
5-4-12

REVISIONS						SHEET NO.
NO.	BY	DATE	NO.	BY	DATE	S-5
1			3			TOTAL SHEETS
2			4			14

DRAWN BY: D.H. CARTER DATE: MAY 2012
CHECKED BY: J.E. MONDOLFI DATE: MAY 2012

5/4/2012
p:\roma\div10\meckln_59\ma10007b\structures\bk5114_sd_cs4.dgn
Florence & Hutcheson, Inc.

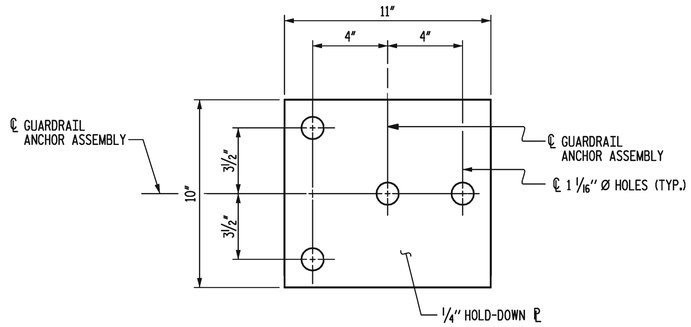

PLAN

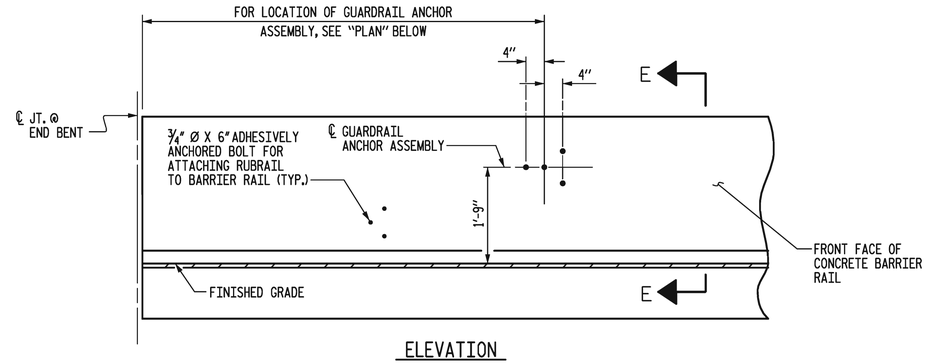

ELEVATION

FOR LOCATION OF RUBRAIL, SEE ROADWAY STD. 862.03

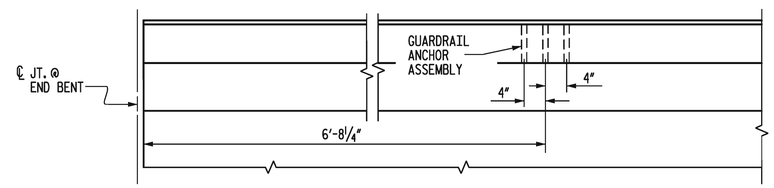

PLAN

LOCATION OF ANCHORS FOR GUARDRAIL

FOR CONCRETE BARRIER RAIL ONLY
END BENT #1 SHOWN, END BENT #2 SIMILAR

NOTES

THE GUARDRAIL ANCHOR ASSEMBLY SHALL CONSIST OF A 1/4" HOLD DOWN PLATE AND 7/8" Ø BOLTS WITH NUTS AND WASHERS, RUBRAIL, AND ADHESIVELY ANCHORED BOLTS.

THE HOLD-DOWN PLATE SHALL CONFORM TO AASHTO M270 GRADE 36. AFTER FABRICATION, THE HOLD-DOWN PLATE SHALL BE HOT-DIP GALVANIZED IN ACCORDANCE WITH AASHTO M111.

BOLTS SHALL CONFORM TO THE REQUIREMENTS OF ASTM A307 AND NUTS SHALL CONFORM TO THE REQUIREMENTS OF AASHTO M291. BOLTS, NUTS AND WASHERS SHALL BE GALVANIZED. (AT THE CONTRACTOR'S OPTION, STAINLESS STEEL BOLTS, NUTS AND WASHERS MAY BE USED AS AN ALTERNATE FOR THE 7/8" Ø GALVANIZED BOLTS, NUTS AND WASHERS. THEY SHALL CONFORM TO OR EXCEED THE MECHANICAL REQUIREMENTS OF ASTM A307. THE USE OF THIS ALTERNATE SHALL BE APPROVED BY THE ENGINEER.)

THE GUARDRAIL ANCHOR ASSEMBLY IS REQUIRED AT ALL POINTS WHERE APPROACH GUARDRAIL IS TO BE ATTACHED TO THE END OF CONCRETE BARRIER RAIL OR CONCRETE END POSTS. FOR POINTS OF ATTACHMENT, SEE SKETCH.

AFTER INSTALLATION, THE EXPOSED THREAD OF THE BOLT SHALL BE BURRED WITH A SHARP POINTED TOOL.

THE COST OF THE GUARDRAIL ANCHOR ASSEMBLY SHALL BE INCLUDED IN THE UNIT CONTRACT PRICE BID FOR CONCRETE BARRIER RAIL.

THE 1 1/4" Ø HOLES SHALL BE FORMED OR DRILLED WITH A CORE BIT. IMPACT TOOLS WILL NOT BE PERMITTED. ANY CONCRETE DAMAGED BY THIS WORK SHALL BE REPAIRED TO THE SATISFACTION OF THE ENGINEER.

THE C6 X 8.2 RUBRAIL IS TO BE ADHESIVELY ANCHORED TO THE RAIL USING THREE 3/4" Ø X 6" BOLTS WITH WASHERS. LEVEL ONE FIELD TESTING IS REQUIRED, AND THE YIELD LOAD OF THE 3/4" Ø BOLT IS 12 KIPS. FOR ADHESIVELY ANCHORED ANCHOR BOLTS OR DOWELS, SEE SPECIAL PROVISIONS. SEE ROADWAY STANDARD 862.03 FOR DETAILS AND LOCATION OF THE RUBRAIL.

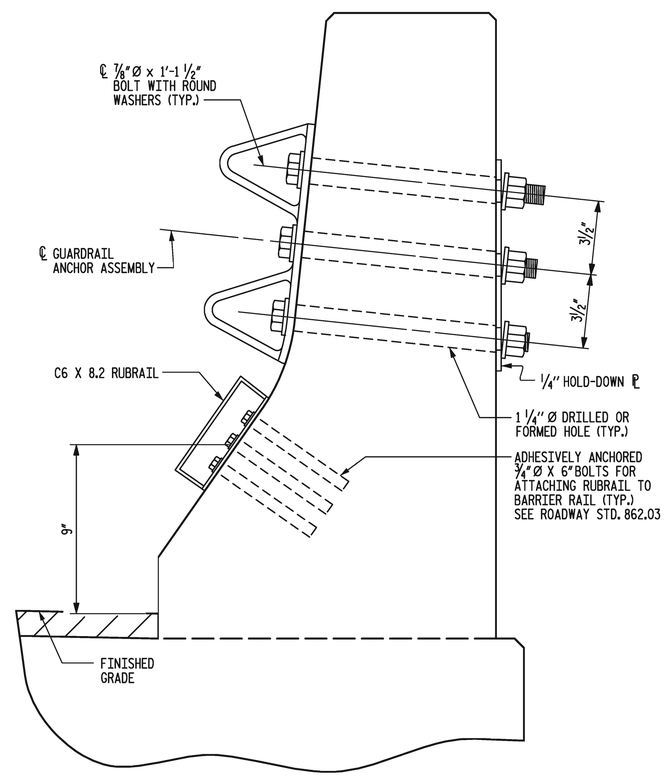

SECTION E-E

GUARDRAIL ANCHOR ASSEMBLY DETAILS

FOR CONCRETE BARRIER RAIL ONLY
(FOR LOCATION OF GUARDRAIL ANCHOR ASSEMBLY, SEE THIS SHEET)

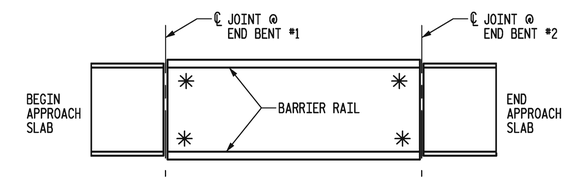

SKETCH SHOWING POINTS OF ATTACHMENTS

✳ DENOTES GUARDRAIL ANCHOR ASSEMBLY

PROJECT NO. 42561
COUNTY: MECKLENBURG
STATION: 17+01.00 -L-

STATE OF NORTH CAROLINA
DEPARTMENT OF TRANSPORTATION
RALEIGH

SUPERSTRUCTURE
GUARDRAIL ANCHORAGE DETAILS

Florence & Hutcheson
CONSULTING ENGINEERS
5121 Kingdom Way, Suite 100 Raleigh, NC 27607
NC License No: F-0258

NORTH CAROLINA PROFESSIONAL SEAL 033 ENGINEER JAMES E. MONDOLFI
5-4-12

REVISIONS						SHEET NO.
NO.	BY	DATE	NO.	BY	DATE	S-6
1			3			TOTAL SHEETS
2			4			14

STD. NO. GRA2

DRAWN BY: D.H. CARTER DATE: MAY 2012
CHECKED BY: J.E. MONDOLFI DATE: MAY 2012

5/4/2012
p:\rcma\dv10\mecklen_59\ma10007b\structures\bk5114_sd_gr.dgn
Florence & Hutcheson, Inc.

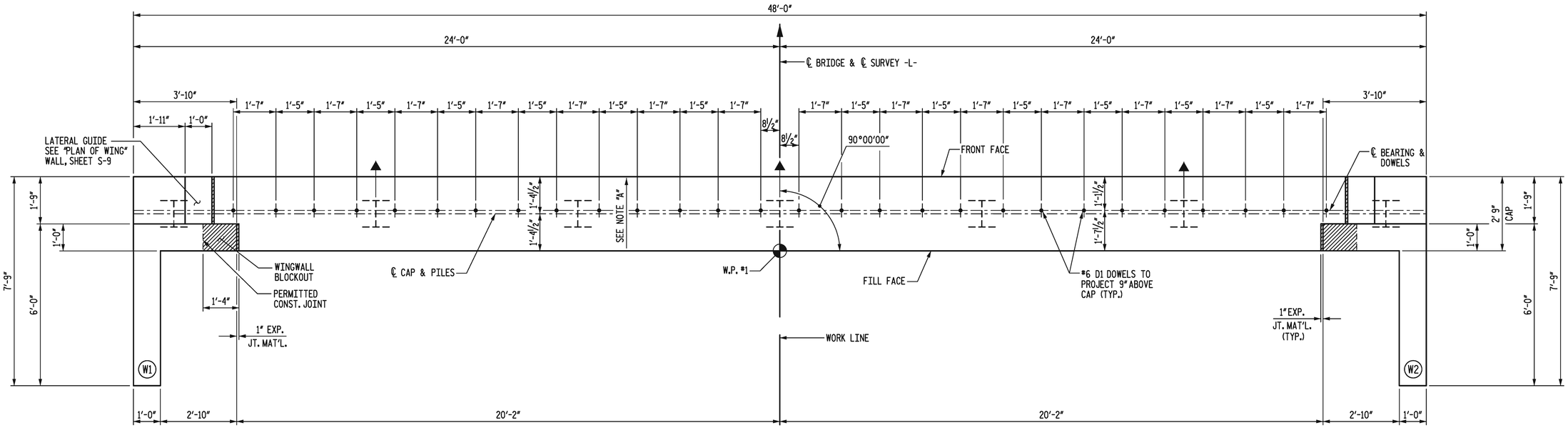

PLAN

NOTE "A":
THE TOP SURFACE OF THE END BENT CAP SHALL BE SLOPED UP TRANSVERSELY FROM THE FILL FACE TO THE FRONT FACE AT THE RATE OF 0.011 FT PER FOOT.

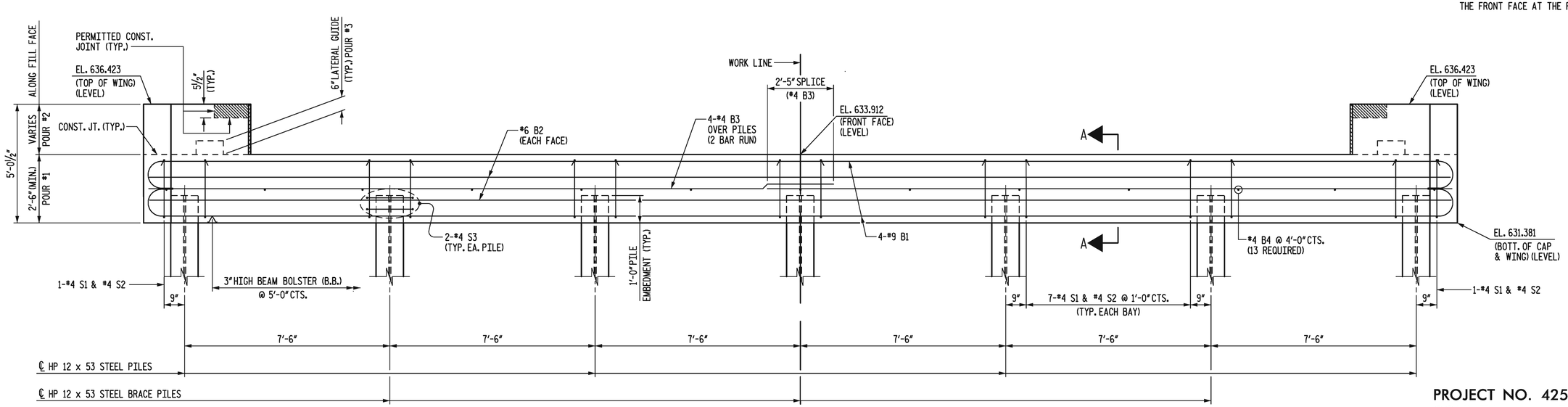

ELEVATION

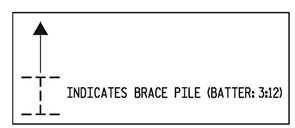

NOTE:

STIRRUPS IN CAP MAY BE SHIFTED SLIGHTLY AS NECESSARY TO CLEAR DOWELS.

THE CONCRETE IN THE SHADED AREA OF THE WING SHALL BE POURED AFTER THE BARRIER RAIL IS CAST IF SLIP FORMING IS USED.

FOR SECTION A-A, SEE SHEET S-9.

THE CONTRACTOR HAS THE OPTION TO OMIT THE LATERAL GUIDE IF APPROVED BY THE ENGINEER.

PROJECT NO. 42561
COUNTY: MECKLENBURG
STATION: 17+01.00 -L-
SHEET 1 OF 3

STATE OF NORTH CAROLINA
DEPARTMENT OF TRANSPORTATION
RALEIGH

SUBSTRUCTURE END BENT 1

Florence & Hutcheson
CONSULTING ENGINEERS
5121 Kingdom Way, Suite 100 Raleigh, NC 27607
NC License No: F-0258

NORTH CAROLINA PROFESSIONAL SEAL 10931 ENGINEER JAMES E. MONDOLFI
5-4-12

REVISIONS						SHEET NO.
NO.	BY	DATE	NO.	BY	DATE	S-7
1			3			TOTAL SHEETS
2			4			14

DRAWN BY: D.H. CARTER DATE: MAY 2012
CHECKED BY: J.E. MONDOLFI DATE: MAY 2012

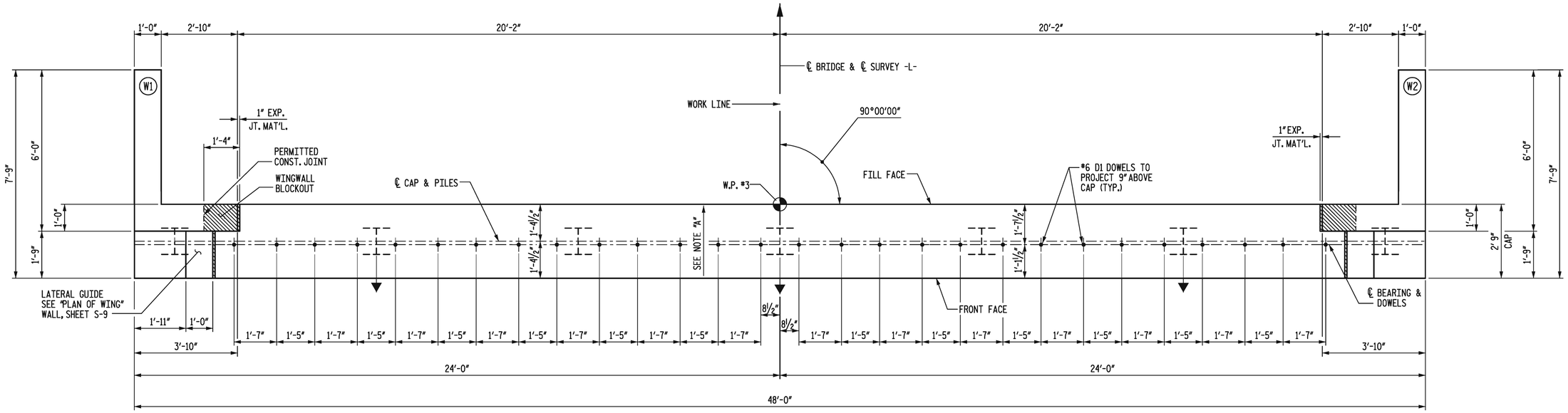

PLAN

NOTE "A":
THE TOP SURFACE OF THE END BENT CAP SHALL BE SLOPED UP TRANSVERSELY FROM THE FRONT FACE TO THE FILL FACE AT THE RATE OF 0.011 FT PER FOOT.

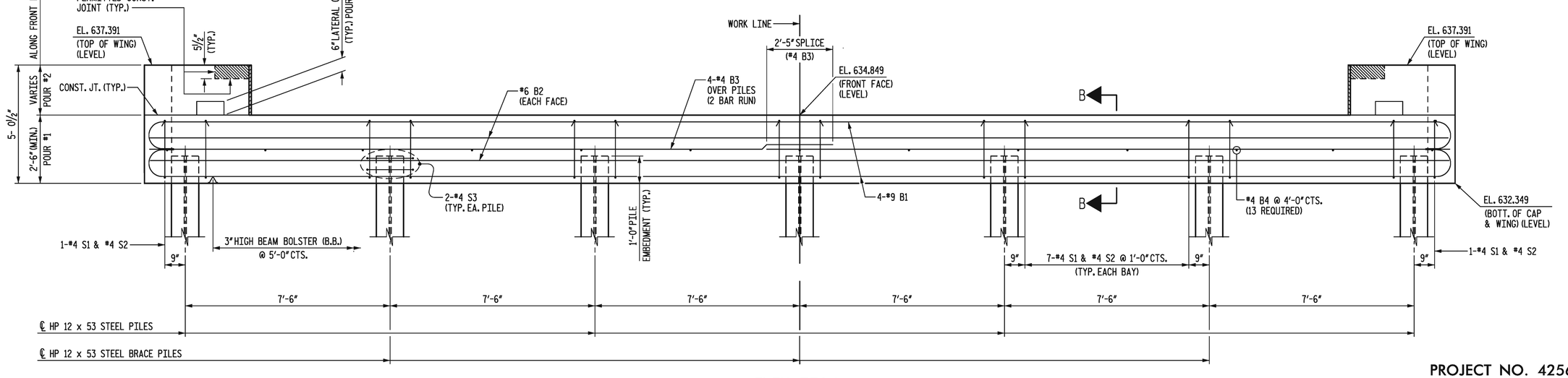

ELEVATION

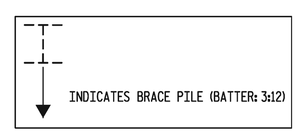

NOTE:

STIRRUPS IN CAP MAY BE SHIFTED SLIGHTLY AS NECESSARY TO CLEAR DOWELS.

THE CONCRETE IN THE SHADED AREA OF THE WING SHALL BE POURED AFTER THE BARRIER RAIL IS CAST IF SLIP FORMING IS USED.

FOR SECTION B-B, SEE SHEET S-9.

THE CONTRACTOR HAS THE OPTION TO OMIT THE LATERAL GUIDE IF APPROVED BY THE ENGINEER.

PROJECT NO. 42561
COUNTY: MECKLENBURG
STATION: 17+01.00 -L-
SHEET 2 OF 3

STATE OF NORTH CAROLINA
DEPARTMENT OF TRANSPORTATION
RALEIGH

SUBSTRUCTURE END BENT 2

Florence & Hutcheson
CONSULTING ENGINEERS
5121 Kingdom Way, Suite 100 Raleigh, NC 27607
NC License No: F-0258

NORTH CAROLINA PROFESSIONAL SEAL 10933 ENGINEER JAMES E. MONDOLFI
5-4-12

REVISIONS						SHEET NO.
NO.	BY	DATE	NO.	BY	DATE	S-8
1			3			TOTAL SHEETS
2			4			14

DRAWN BY: D.H. CARTER DATE: MAY 2012
CHECKED BY: J.E. MONDOLFI DATE: MAY 2012

5/4/2012
p:\roma\div10\meckien_59\ma10007b\structures\bk5114_sd_e2a.dgn
Florence & Hutcheson, Inc.

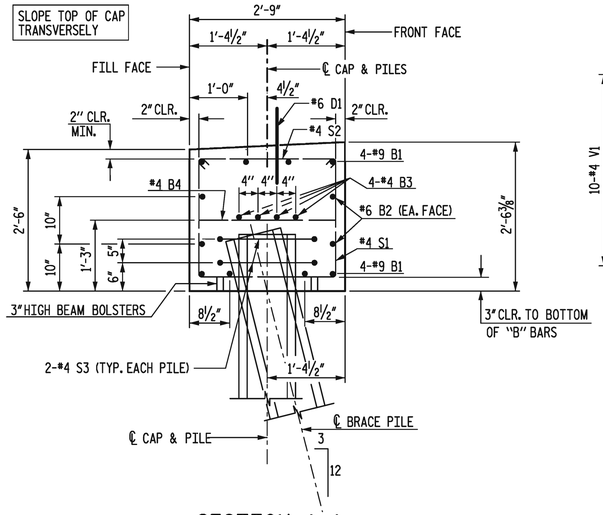

SECTION A-A

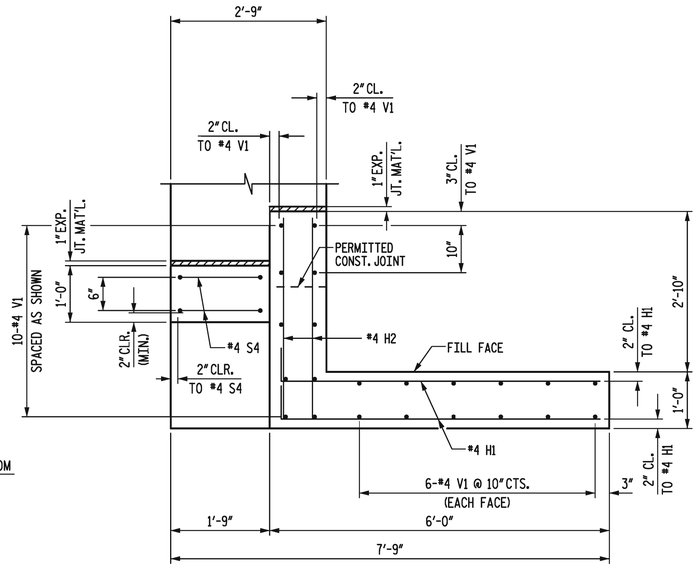

PLAN OF WING

BAR TYPES

ALL BAR DIMENSIONS ARE OUT TO OUT.

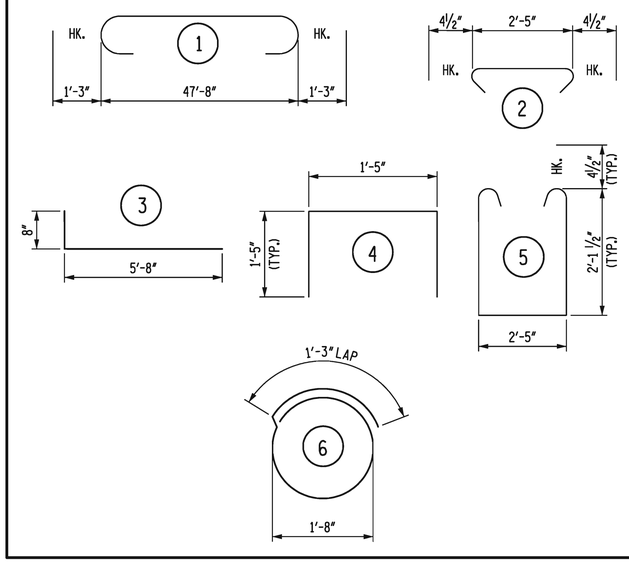

BILL OF MATERIAL

FOR ONE END BENT (2 REQUIRED)

BAR	NO.	SIZE	TYPE	LENGTH	WEIGHT
B1	8	#9	1	50'-2"	1,365
B2	4	#6	STR	47'-8"	286
B3	8	#4	STR	25'-1"	134
B4	13	#4	STR	2'-5"	21
D1	28	#6	STR	1'-6"	63
H1	24	#4	3	6'-4"	102
H2	8	#4	STR	3'-6"	19
S1	44	#4	5	7'-5"	218
S2	44	#4	2	3'-2"	93
S3	14	#4	6	6'-6"	61
S4	4	#4	4	4'-3"	11
V1	44	#4	STR	4'-8"	137
REINFORCING STEEL TOTAL				LBS.	2,510

POUR #1 CAP & BOTTOM OF WINGS	13.2	CY
POUR #2 TOP OF WINGS	1.1	CY
POUR #3 LATERAL GUIDES	0.1	CY
TOTAL	14.4	CY

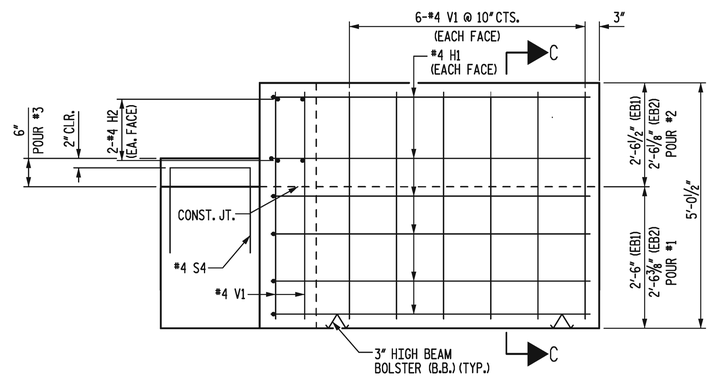

ELEVATION OF WING

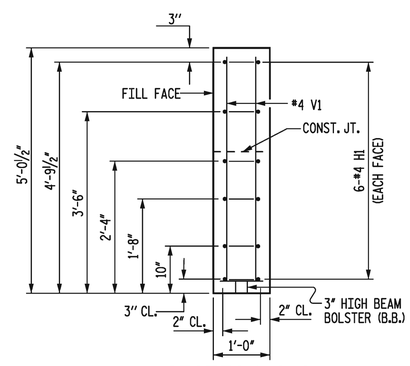

SECTION C-C

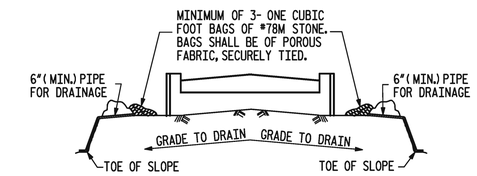

BAGGED STONE AND PIPE SHALL BE PLACED IMMEDIATELY AFTER COMPLETION OF END BENT EXCAVATION. PIPE MAY BE EITHER CONCRETE, CORRUGATED STEEL, CORRUGATED ALUMINUM ALLOY, OR CORRUGATED PLASTIC. PERFORATED PIPE WILL NOT BE ALLOWED.

BAGGED STONE SHALL REMAIN IN PLACE UNTIL THE ENGINEER DIRECTS THAT IT BE REMOVED. THE CONTRACTOR SHALL REMOVE AND DISPOSE OF SILT ACCUMULATIONS AT BAGGED STONE WHEN SO DIRECTED BY THE ENGINEER. BAGS SHALL BE REMOVED AND REPLACED WHENEVER THE ENGINEER DETERMINES THAT THEY HAVE DETERIORATED AND LOST THEIR EFFECTIVENESS.

NO SEPARATE PAYMENT WILL BE MADE FOR THIS WORK AND THE ENTIRE COST OF THIS WORK SHALL BE INCLUDED IN THE UNIT CONTRACT PRICE BID FOR THE SEVERAL PAY ITEMS.

TEMPORARY DRAINAGE AT END BENT

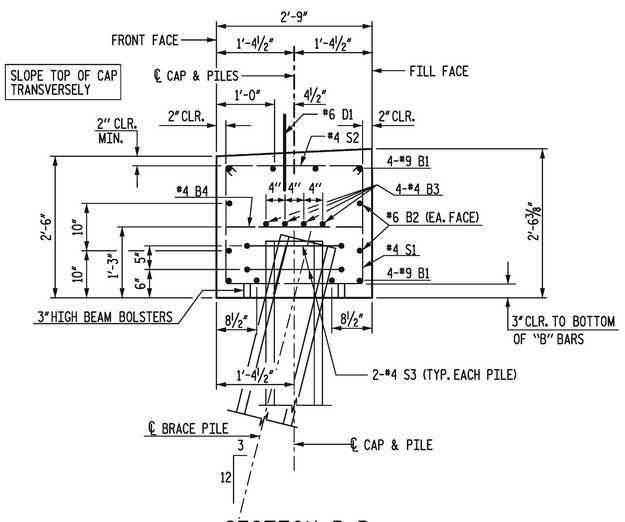

SECTION B-B

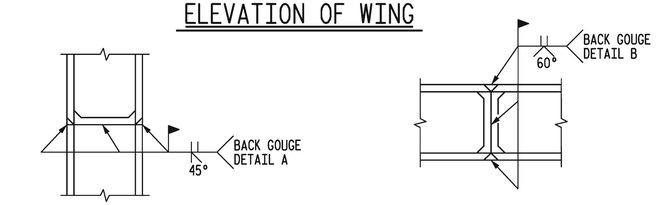

** PILE VERTICAL

PILE HORIZONTAL OR VERTICAL

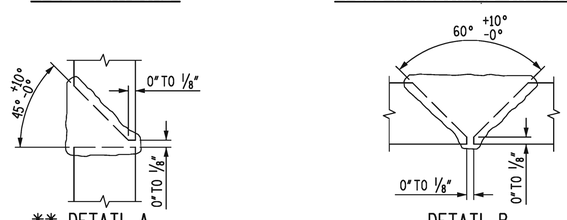

** DETAIL A

** POSITION OF PILE DURING WELDING

DETAIL B

PILE SPLICE DETAILS

PROJECT NO. 42561
COUNTY: MECKLENBURG
STATION: 17 + 01.00 –L–

SHEET 3 OF 3

STATE OF NORTH CAROLINA
DEPARTMENT OF TRANSPORTATION
RALEIGH

SUBSTRUCTURE
END BENT DETAILS

Florence & Hutcheson
CONSULTING ENGINEERS
5121 Kingdom Way, Suite 100 Raleigh, NC 27607
NC License No: F-0258

NORTH CAROLINA PROFESSIONAL SEAL ENGINEER JAMES E. MONDOLFI
5-4-12

REVISIONS						SHEET NO.
NO.	BY	DATE	NO.	BY	DATE	S-9
1			3			TOTAL SHEETS
2			4			14

DRAWN BY: D.H. CARTER DATE: MAY 2012
CHECKED BY: J.E. MONDOLFI DATE: MAY 2012

5/4/2012
p:\roma\div10\mecklen_59\ma10007b\structures\bk5114_sd_e2b.dgn
Florence & Hutcheson, Inc.

NOTES:

STIRRUPS MAY BE SHIFTED SLIGHTLY AS NECESSARY TO CLEAR DOWELS.

HOOKS ON "V" BARS MAY BE TURNED AS NECESSARY FOR PLACING REINFORCING STEEL.

FOR SECTION A-A, SEE SHEET S-11.

THE CONTRACTOR'S ATTENTION IS CALLED TO THE FACT THAT THE LONGITUDINAL REINFORCEMENT FOR THE COLUMNS IS DETAILED WITH 3 FEET OF EXTRA LENGTH.

BOTTOM OF FOOTINGS SHALL NOT BE CONSTRUCTED AT AN ELEVATION HIGHER THAN SHOWN ON THE PLANS.

THE CONTRACTOR HAS THE OPTION TO OMIT THE LATERAL GUIDE IF APPROVED BY THE ENGINEER.

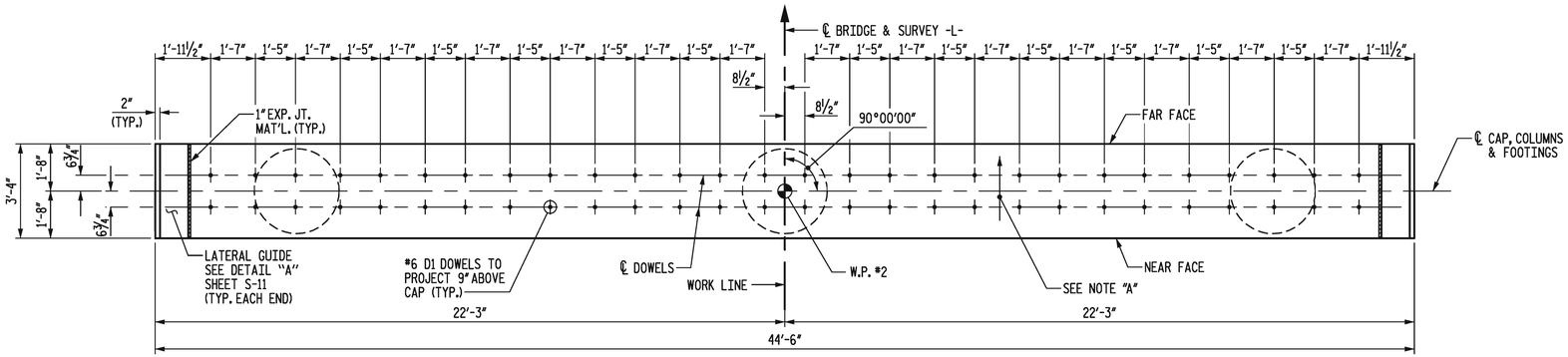

PLAN

NOTE "A":
THE TOP SURFACE OF THE BENT CAP SHALL BE SLOPED UP TRANSVERSELY FROM THE NEAR FACE TO THE FAR FACE AT THE RATE OF 0.011 FT PER FOOT.

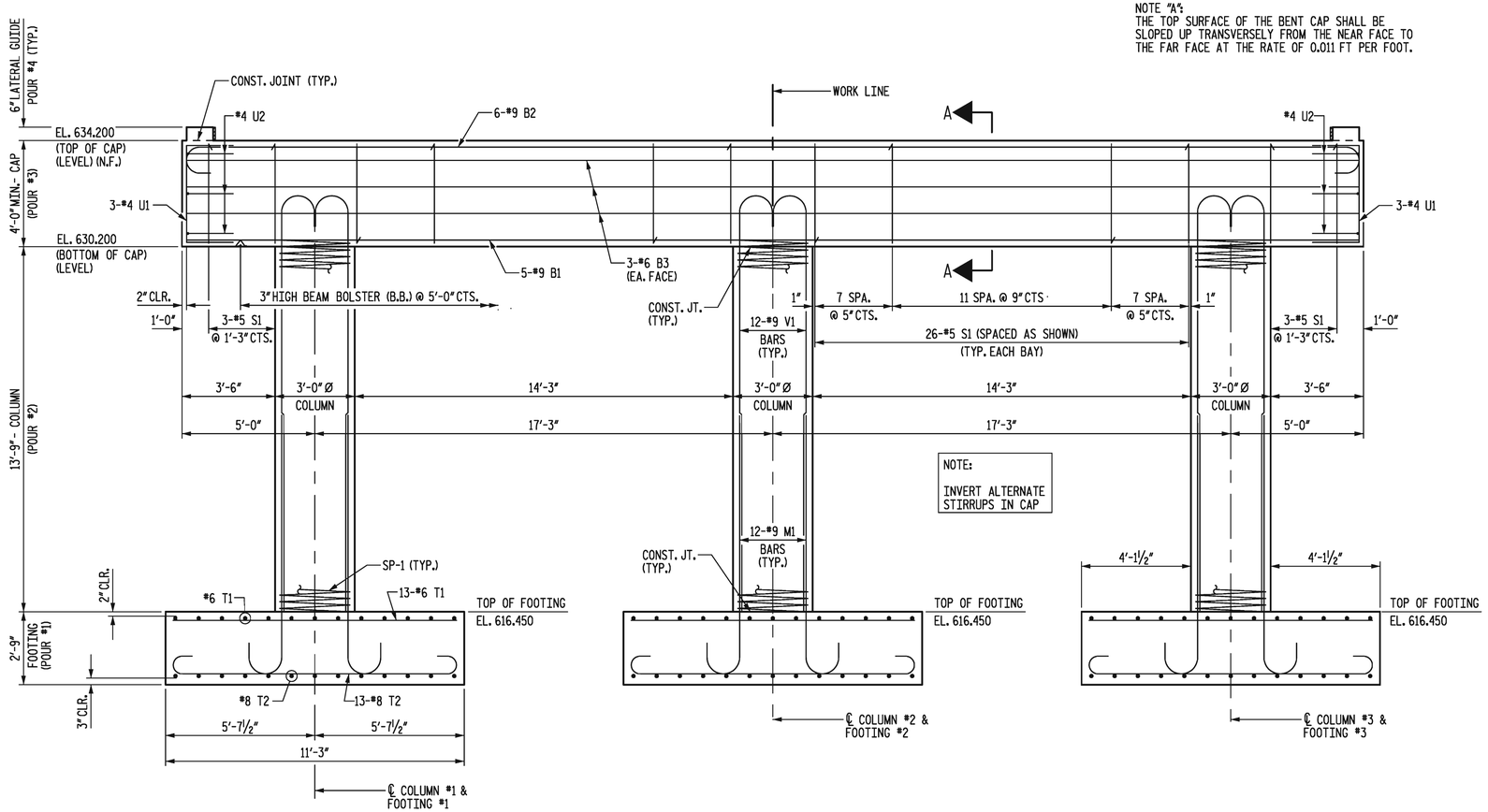

ELEVATION

DETAILS SHOWN FOR FOOTINGS ARE TYPICAL.

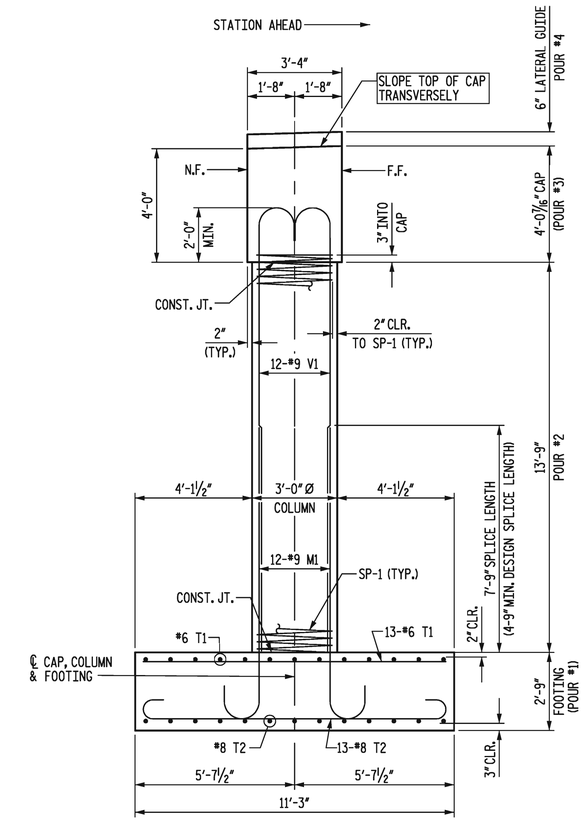

END ELEVATION

PROJECT NO. 42561
COUNTY: MECKLENBURG
STATION: 17 + 01.00 –L–
SHEET 1 OF 2

STATE OF NORTH CAROLINA
DEPARTMENT OF TRANSPORTATION
RALEIGH

SUBSTRUCTURE
BENT #1

Florence & Hutcheson
CONSULTING ENGINEERS
5121 Kingdom Way, Suite 100 Raleigh, NC 27607
NC License No: F-0258

NORTH CAROLINA PROFESSIONAL SEAL 10331 ENGINEER JAMES E. MONDOLFI
5-4-12

REVISIONS						SHEET NO.
NO.	BY	DATE	NO.	BY	DATE	S-10
1			3			TOTAL SHEETS
2			4			14

DRAWN BY: D.H. CARTER DATE: MAY 2012
CHECKED BY: J.E. MONDOLFI DATE: MAY 2012

5/4/2012
p:\rdma\dv10\meckln_59\ma10007b\structures\bk5114_sd_b1a.dgn
Florence & Hutcheson, Inc.

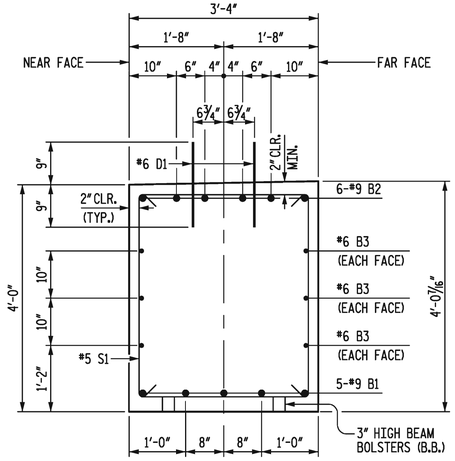

SECTION A-A

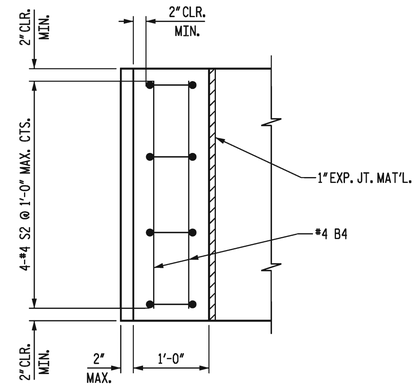

PLAN

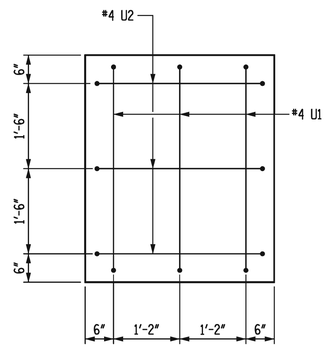

CAP END VIEW

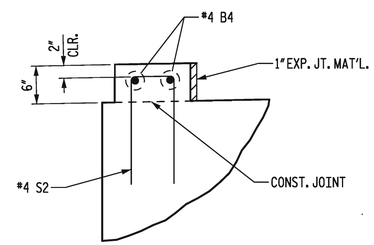

ELEVATION

DETAIL "A"

BAR TYPES

ALL BAR DIMENSIONS ARE OUT TO OUT.

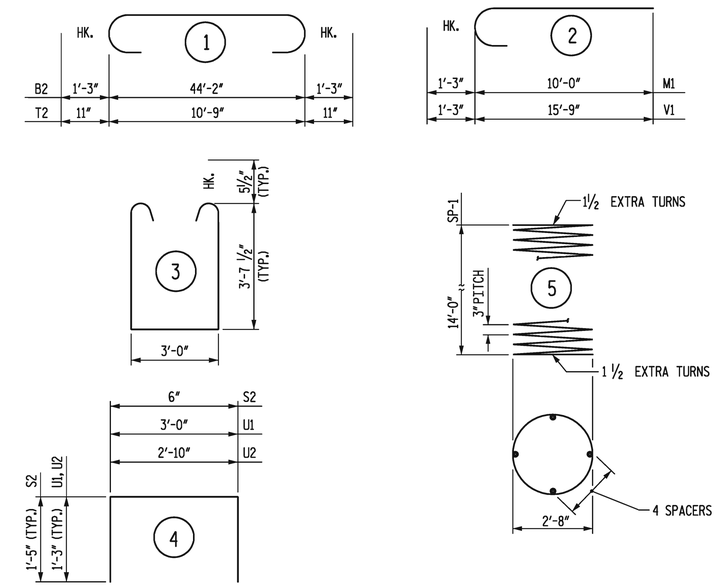

BILL OF MATERIAL

BENT #1

BAR	NO.	SIZE	TYPE	LENGTH	WEIGHT
B1	5	9	STR	44'-2"	751
B2	6	9	1	46'-8"	952
B3	6	6	STR	44'-2"	398
B4	4	4	STR	3'-0"	8
D1	56	6	STR	1'-6"	126
M1	36	9	2	11'-3"	1,377
S1	58	5	3	11'-2"	676
S2	8	4	4	3'-4"	18
T1	78	6	STR	10'-9"	1,259
T2	78	8	1	12'-7"	2,621
U1	6	4	4	5'-6"	22
U2	6	4	4	5'-4"	21
V1	36	9	2	17'-0"	2,081

REINFORCING STEEL TOTAL 10,310 LB

SPIRAL COLUMN REINFORCING STEEL

BAR	NO.	SIZE	TYPE	LENGTH	WEIGHT
SP-1	3	**	5	486'-9"	975

SPIRAL COLUMN REINF. STEEL TOTAL 975 LB

POUR #1 FOOTINGS	38.7	CY
POUR #2 COLUMNS	10.8	CY
POUR #3 CAP	22.0	CY
POUR #4 LATERAL GUIDES	0.1	CY
TOTAL	71.6	CY

** NOTE: THE SP-1 SPIRAL REINFORCING STEEL SHALL BE W20 OR D-20 COLD DRAWN WIRE OR #4 PLAIN OR DEFORMED BAR.

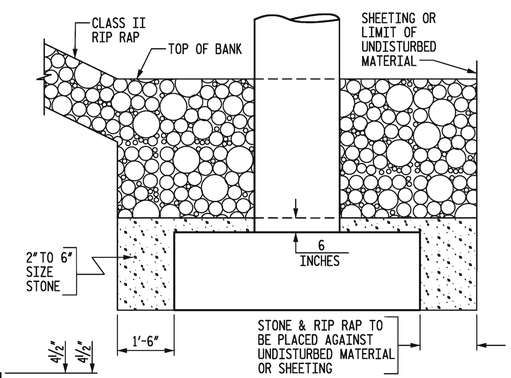

PIER SCOUR PROTECTION

NOTES FOR SUBSTRUCTURE SCOUR PROTECTION

SUBSTRUCTURE SCOUR PROTECTION SHALL BE PROVIDED AS INDICATED IN THE PLANS. THE TWO TO SIX INCH SIZE STONE SHALL BE PLACED AFTER FOOTING FORMWORK HAS BEEN REMOVED AND WHILE THE EXCAVATION IS DEWATERED. THE RIP RAP STONE SHALL BE PLACED BEFORE COFFERDAM SHEETING IS REMOVED. EITHER BEFORE OR AFTER THE EXCAVATION IS ALLOWED TO FLOOD. WHEN NO SHEETING IS USED, EACH STONE TYPE SHALL BE PLACED TO THE REQUIRED THICKNESS AND SHALL EXTEND HORIZONTALLY TO THE UNDISTURBED MATERIAL.

THE TWO TO SIX INCH SIZE SCOUR PROTECTION STONE SHALL BE HARD AND DURABLE IN NATURE. WHILE NO SPECIFIC GRADATION IS REQUIRED THE VARIOUS SIZES OF STONE SHALL BE REASONABLY EQUALLY DISTRIBUTED WITHIN THE REQUIRED SIZE RANGE. THE STONE SHALL BE ESSENTIALLY CUBICAL IN SHAPE.

THE COST OF THE ABOVE WORK INCLUDING THE TWO TO SIX INCH SIZE STONE, MATERIALS, EQUIPMENT, TOOLS, LABOR AND INCIDENTALS NECESSARY TO COMPLETE THE WORK SHALL BE INCLUDED IN THE LUMP SUM PRICE BID FOR GRADING. CLASS II RIP RAP SHALL BE PAID FOR AT THE CONTRACT UNIT PRICE BID FOR CLASS II RIP RAP PER TON. FOUNDATION EXCAVATION COST SHALL BE INCLUDED IN THE LUMP SUM PRICE FOR GRADING.

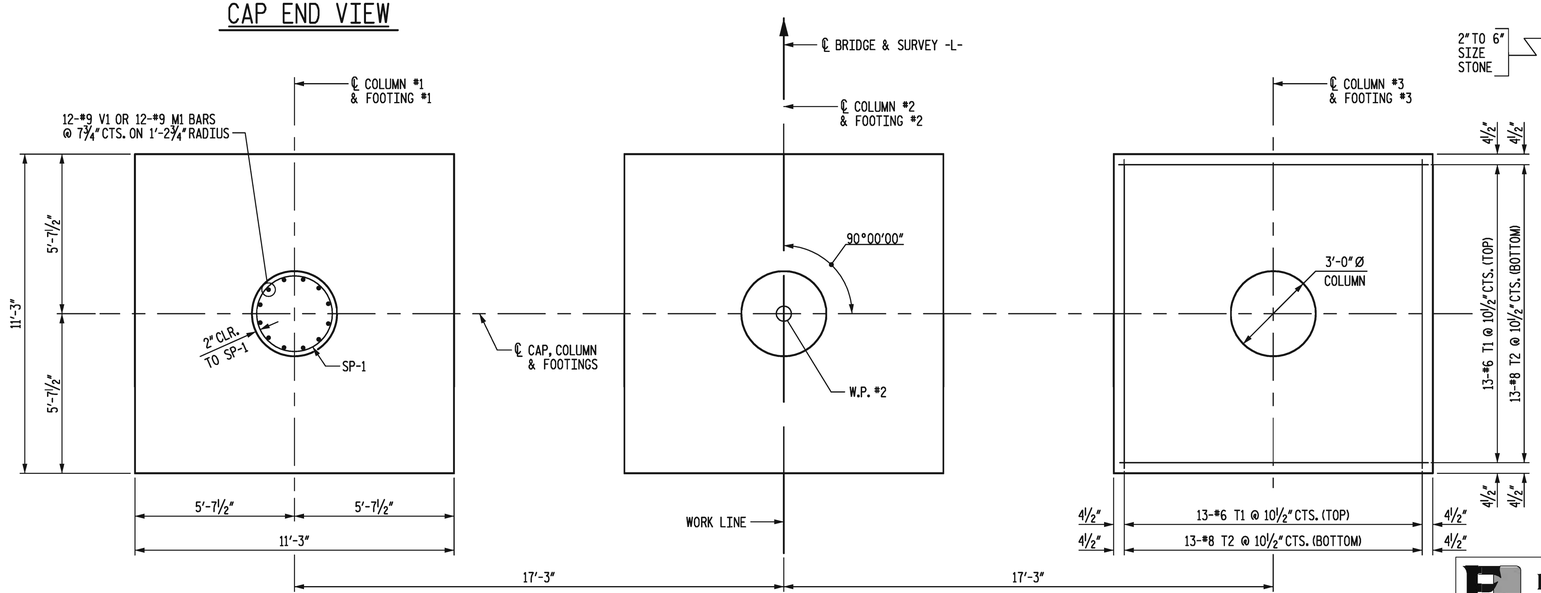

PLAN OF FOOTINGS

DETAILS SHOWN FOR FOOTINGS AND COLUMNS ARE TYPICAL.

PROJECT NO. 42561
COUNTY: MECKLENBURG
STATION: 17+01.00 -L-

SHEET 2 OF 2

STATE OF NORTH CAROLINA
DEPARTMENT OF TRANSPORTATION
RALEIGH

SUBSTRUCTURE
BENT DETAILS

Florence & Hutcheson
CONSULTING ENGINEERS
5121 Kingdom Way, Suite 100 Raleigh, NC 27607
NC License No: F-0258

NORTH CAROLINA PROFESSIONAL SEAL ENGINEER JAMES E. MONDOLFI
5-4-12

REVISIONS						SHEET NO.
NO.	BY	DATE	NO.	BY	DATE	S-11
1			3			TOTAL SHEETS
2			4			14

DRAWN BY: D.H. CARTER DATE: MAY 2012
CHECKED BY: J.E. MONDOLFI DATE: MAY 2012

5/4/2012
p:\rcma\div10\meckln_59\m010007b\structures\bk5114_sd_blb.dgn
Florence & Hutcheson, Inc.

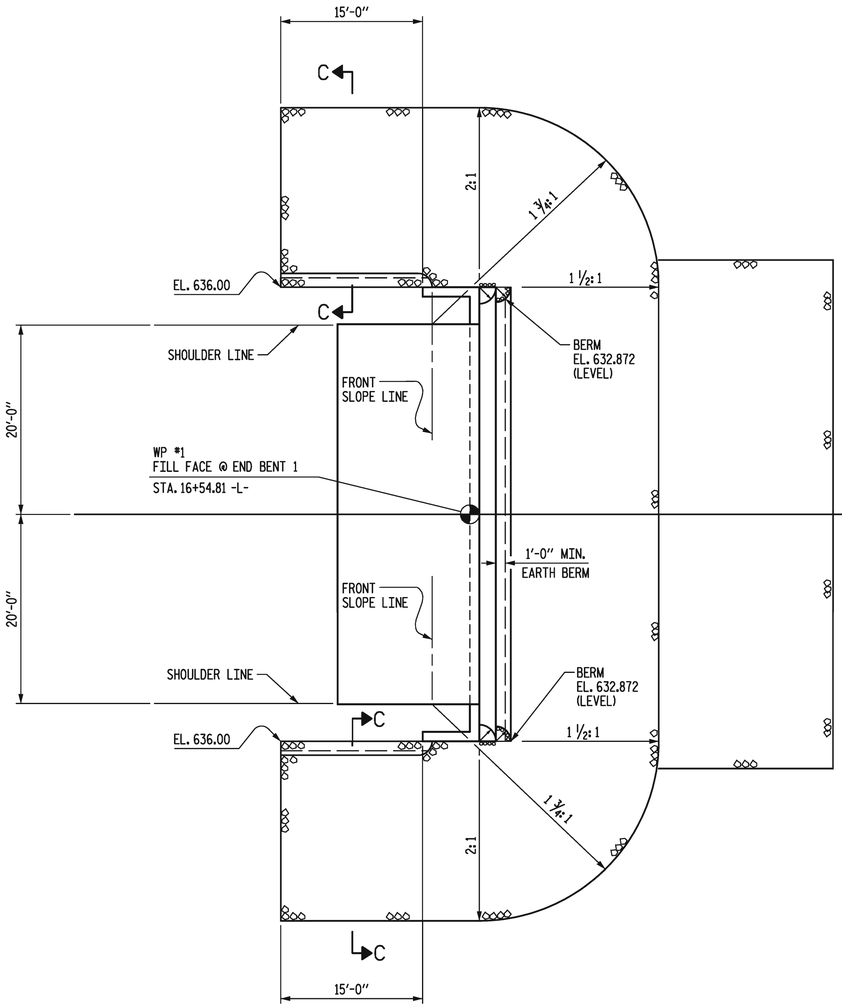

END BENT 1

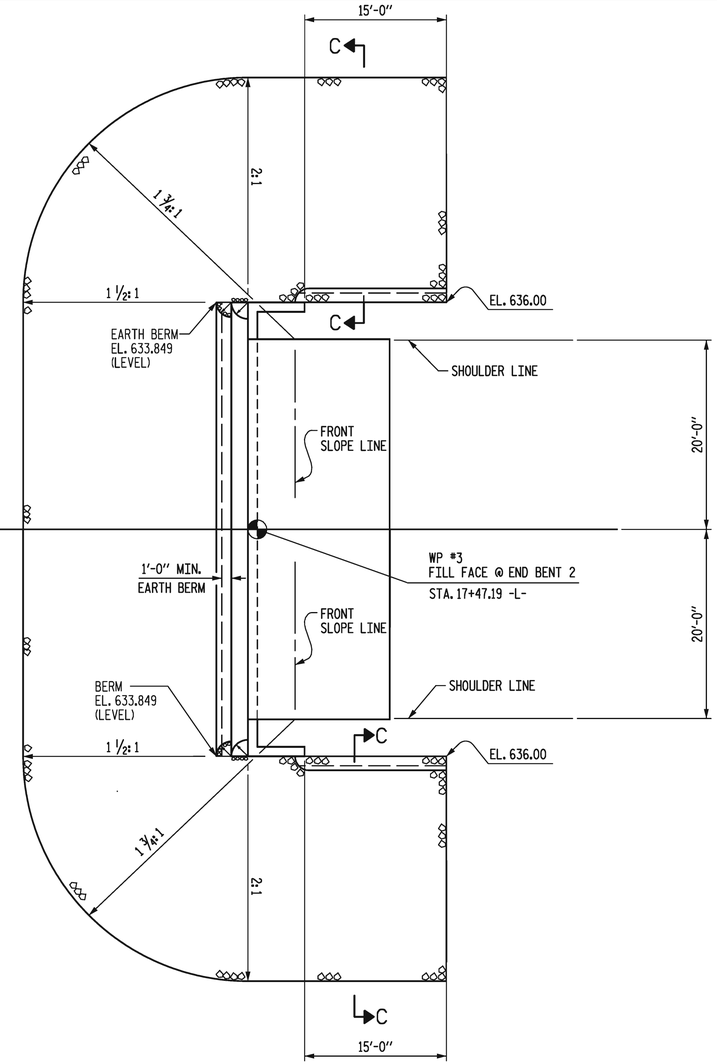

END BENT 2

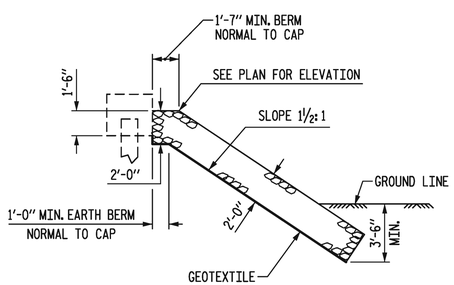

℄ SECTION
BERM RIP RAPPED

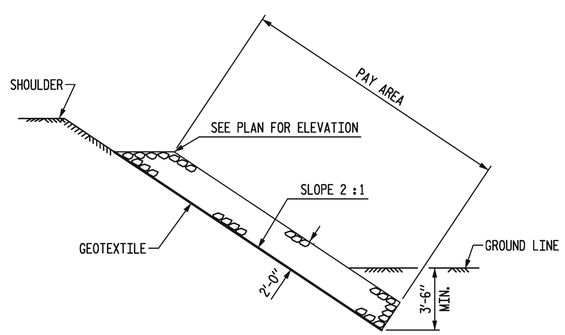

SECTION C-C

ESTIMATED QUANTITIES		
BRIDGE @ STA. 17+01.00 -L-	RIP RAP CLASS II (2'-0" THICK)	GEOTEXTILE FOR DRAINAGE
	TONS	SQUARE YARDS
END BENT 1	352	391
END BENT 2	339	377

PROJECT NO. 42561
COUNTY: MECKLENBURG
STATION: 17 + 01.00 -L-

STATE OF NORTH CAROLINA
DEPARTMENT OF TRANSPORTATION
RALEIGH

RIP RAP DETAILS

Florence & Hutcheson
CONSULTING ENGINEERS
5121 Kingdom Way, Suite 100 Raleigh, NC 27607
NC License No: F-0258

NORTH CAROLINA PROFESSIONAL SEAL 19863 ENGINEER JAMES E. MONDOLFI
5-4-12

REVISIONS						SHEET NO.
NO.	BY	DATE	NO.	BY	DATE	S-12
1			3			TOTAL SHEETS
2			4			14

DRAWN BY: D.H. CARTER DATE: MAY 2012
CHECKED BY: J.E. MONDOLFI DATE: MAY 2012

5/4/2012
P:\hcmd\div10\mecklen_59\md10007b\structures\bk5114_ed_rr.dgn
Florence & Hutcheson, Inc.

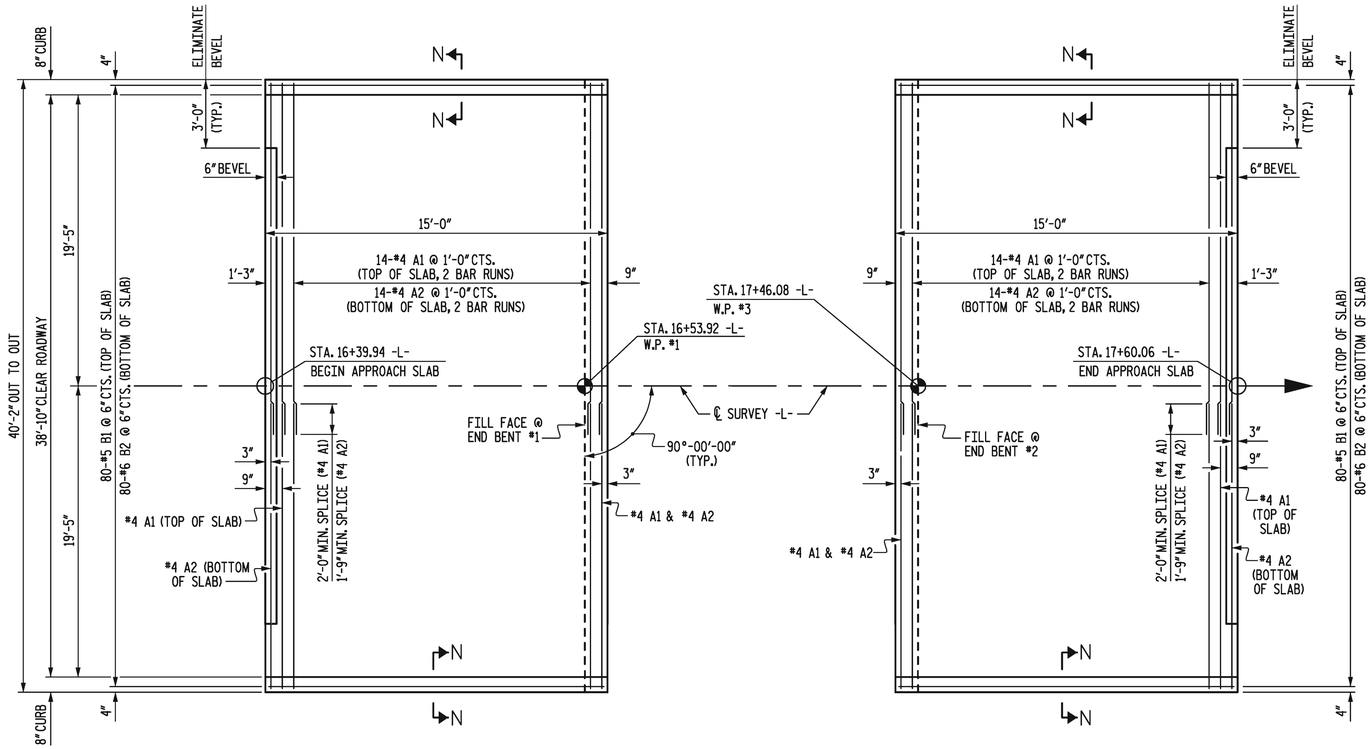

PLAN OF APPROACH SLABS

DIMENSIONS ARE TYPICAL FOR BOTH APPROACH SLABS

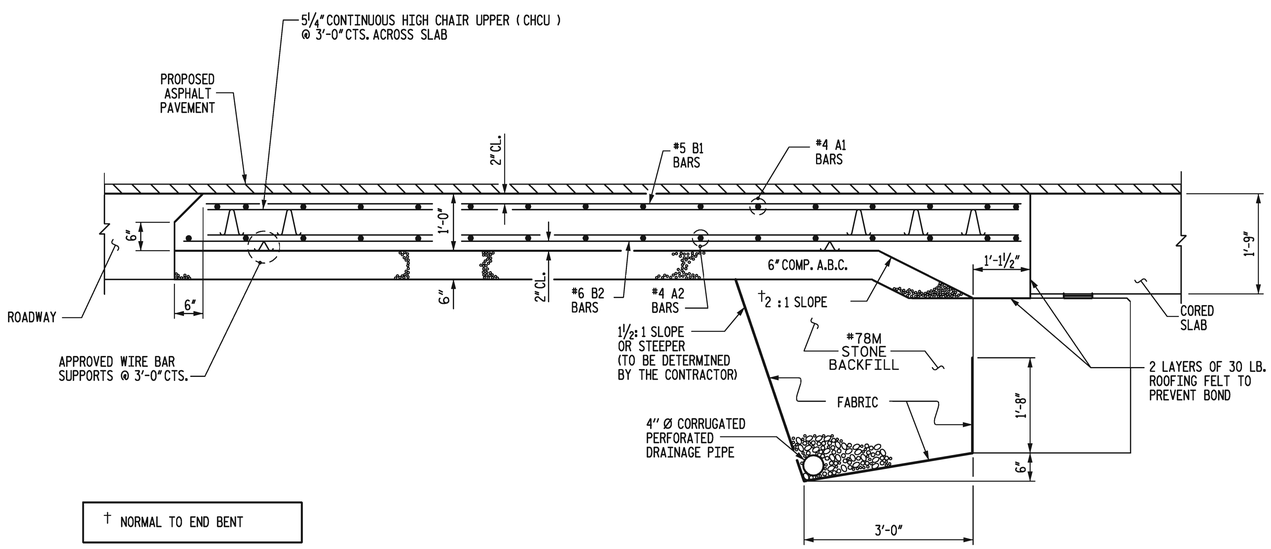

† NORMAL TO END BENT

SECTION THRU SLAB

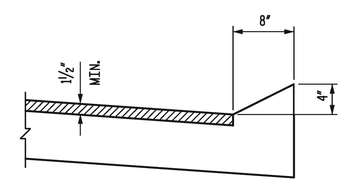

SECTION N-N

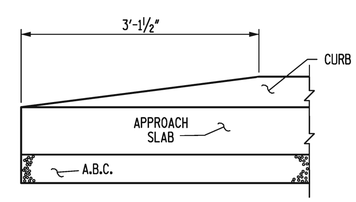

END OF CURB WITHOUT SHOULDER BERM GUTTER

CURB DETAILS

NOTES

FOR BRIDGE APPROACH FILL INCLUDING FABRIC, 4" Ø DRAINAGE PIPE, AND #78M STONE BACKFILL, SEE ROADWAY STANDARD DRAWINGS.

APPROACH SLAB SHALL NOT BE CONSTRUCTED PRIOR TO INSTALLATION OF CORED SLAB.

FABRIC SHALL BE TYPE 1 ENGINEERING FABRIC IN ACCORDANCE WITH THE STANDARD SPECIFICATIONS SECTION 1056.

#78M STONE BACKFILL (CLASS V SELECT MATERIAL) SHALL BE IN ACCORDANCE WITH STANDARD SPECIFICATIONS SECTION 1016.

#78M STONE BACKFILL IS TO BE CONTINUOUS ALONG FILL FACE OF END BENT CAP FROM OUTSIDE EDGE TO OUTSIDE EDGE OF APPROACH SLAB.

FOR THE 4" Ø DRAINAGE PIPE OUTLET(S), SEE ROADWAY STANDARD DRAWINGS..

AREA BETWEEN THE WINGWALL AND APPROACH SLAB SHALL BE GRADED TO DRAIN THE WATER AWAY FROM THE FILL FACE OF THE BRIDGE AND SHALL BE PAVED.

THE 6" COMP. A.B.C. SHALL BE FLUSH WITH THE ROADWAY END OF THE APPROACH SLAB AND SHALL EXTEND 1'-0" OUTSIDE OF EACH EDGE OF THE APPROACH SLAB.

THE CONTRACTOR MAY USE 4" TYPE B-25.0B ASPHALT CONCRETE BASE COURSE IN LIEU OF 6" COMP. A.B.C. IF THIS OPTION IS USED, THE BASE COURSE SHALL BE FLUSH WITH THE ROADWAY END OF THE APPROACH SLAB, AND THE WIDTH SHALL BE THE SAME AS THAT OF THE APPROACH SLAB.

THE CONTRACTOR MAY USE 5" CLASS "A" CONCRETE BASE IN LIEU OF 6" COMP. A.B.C. IF THIS OPTION IS USED, THE CONCRETE BASE SHALL BE FLUSH WITH THE ROADWAY END OF THE APPROACH SLAB, AND THE WIDTH SHALL BE THE SAME AS THAT OF THE APPROACH SLAB. THE CONCRETE SHALL BE FINISHED TO A SMOOTH SURFACE AND A LAYER OF 30 LB ROOFING FELT SHALL BE PLACED BETWEEN THE CONCRETE BASE AND THE APPROACH SLAB TO PREVENT BOND. THE APPROACH SLAB SHALL NOT BE CAST UNTIL THE CONCRETE BASE HAS REACHED AN AGE OF THREE CURING DAYS.

FOR JOINT DETAILS, SEE "PRESTRESSED CONCRETE CORED SLAB UNIT" SHEETS.

APPROACH SLAB GROOVING IS NOT REQUIRED.

BILL OF MATERIAL

APPROACH SLAB AT END BENT #1

BAR	NO.	SIZE	TYPE	LENGTH	WEIGHT
✳A1	32	#4	STR	20'-11"	447
A2	32	#4	STR	20'-10"	445
✳B1	80	#5	STR	14'-3"	1,189
B2	80	#6	STR	14'-8"	1,762
REINFORCING STEEL				LBS.	2,207
✳ EPOXY COATED REINFORCING STEEL				LBS.	1,636
CLASS AA CONCRETE AT END BENT #1				C. Y.	24.7

APPROACH SLAB AT END BENT #2

BAR	NO.	SIZE	TYPE	LENGTH	WEIGHT
✳A1	32	#4	STR	20'-11"	447
A2	32	#4	STR	20'-10"	445
✳B1	80	#5	STR	14'-3"	1,189
B2	80	#6	STR	14'-8"	1,762
REINFORCING STEEL				LBS.	2,207
✳ EPOXY COATED REINFORCING STEEL				LBS.	1,636
CLASS AA CONCRETE AT END BENT #2				C. Y.	24.8

PROJECT NO. 42561
COUNTY: MECKLENBURG
STATION: 17 + 01.00 -L-

SHEET 1 OF 2

STATE OF NORTH CAROLINA
DEPARTMENT OF TRANSPORTATION
RALEIGH

APPROACH SLAB
38'-10" CLEAR ROADWAY
90° SKEW
(SUB REGIONAL TIER)

Florence & Hutcheson
CONSULTING ENGINEERS
5121 Kingdom Way, Suite 100 Raleigh, NC 27607
NC License No: F-0258

NORTH CAROLINA PROFESSIONAL SEAL ENGINEER JAMES E. MONDOLFI
5-4-12

REVISIONS						SHEET NO.
NO.	BY	DATE	NO.	BY	DATE	S-13
1			3			TOTAL SHEETS
2			4			14

DRAWN BY: D.H. CARTER DATE: MAY 2012
CHECKED BY: J.E. MONDOLFI DATE: MAY 2012

5/4/2012
p:\hcma\div10\mecklen_59\ma10007b\structures\bk5114_sd_asl.dgn
Florence & Hutcheson, Inc.

STD. NO. BAS13

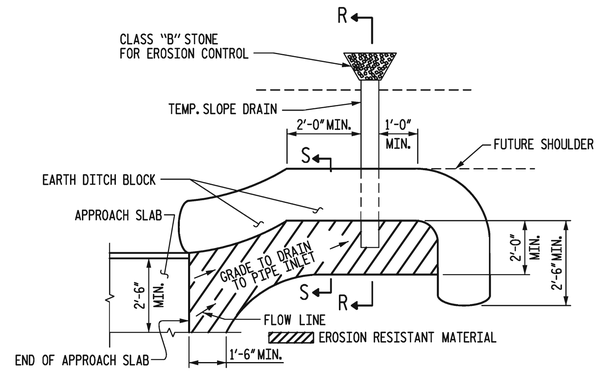

NOTE: IMMEDIATELY AFTER THE CONSTRUCTION OF THE APPROACH SLAB, THE CONTRACTOR SHALL PROVIDE TEMPORARY BERM AND SLOPE DRAIN. CONTRACTOR SHALL GRADE TO PIPE INLET AND PROVIDE EROSION RESISTANT MATERIAL AS SHOWN. THE EROSION RESISTANT MATERIAL SHALL BE EITHER 1) ASPHALT PLANT MIX, TYPE 1 OR TYPE 2, MIN. 2" DEPTH, 2) EROSION CONTROL MAT, OR 3) CONCRETE, AS DIRECTED BY THE ENGINEER. THE SLOPE DRAIN SHALL CONSIST OF A NON-PERFORATED TEMPORARY DRAINAGE PIPE, 12 INCHES IN DIAMETER.

PLAN VIEW

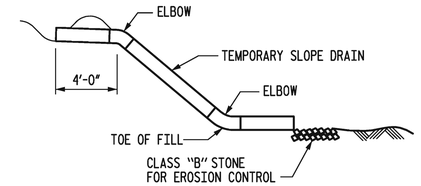

SECTION R-R

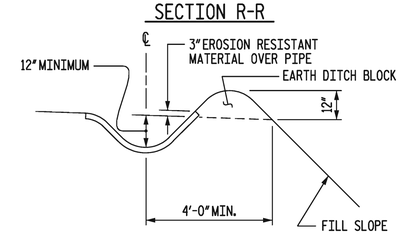

SECTION S-S

TEMPORARY BERM AND SLOPE DRAIN DETAILS

(TO BE USED WHEN SHOULDER BERM GUTTER IS REQUIRED)

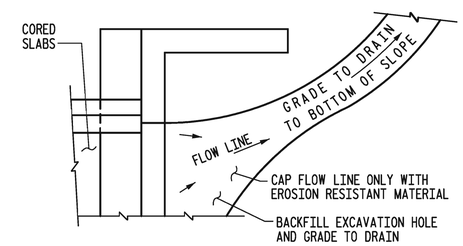

NOTE: IF THE APPROACH SLAB IS NOT CONSTRUCTED IMMEDIATELY AFTER THE BACKFILLING OF THE END BENT EXCAVATION, GRADE TO DRAIN TO THE BOTTOM OF THE SLOPE AND PROVIDE EROSION RESISTANT MATERIAL, SUCH AS FIBERGLASS ROVING OR AS DIRECTED BY THE ENGINEER TO PREVENT SOIL EROSION AND TO PROTECT THE AREA ADJACENT TO THE STRUCTURE. THE CONTRACTOR WILL BE REQUIRED TO REMOVE THESE MATERIALS PRIOR TO CONSTRUCTION OF THE APPROACH SLAB.

TEMPORARY DRAINAGE DETAIL

PROJECT NO. 42561
COUNTY: MECKLENBURG
STATION: 17+01.00 –L–

SHEET 2 OF 2

STATE OF NORTH CAROLINA
DEPARTMENT OF TRANSPORTATION
RALEIGH

STANDARD

BRIDGE APPROACH
SLAB DETAILS

Florence & Hutcheson
CONSULTING ENGINEERS
5121 Kingdom Way, Suite 100 Raleigh, NC 27607
NC License No: F-0258

NORTH CAROLINA PROFESSIONAL SEAL 035 ENGINEER JAMES E. MONDOLFI
5-4-12

REVISIONS						SHEET NO.
NO.	BY	DATE	NO.	BY	DATE	S-14
1			3			TOTAL SHEETS
2			4			14

STD. NO. BAS10

DRAWN BY: D.H. CARTER DATE: MAY 2012
CHECKED BY: J.E. MONDOLFI DATE: MAY 2012

STANDARD NOTES

DESIGN DATA:

SPECIFICATIONS	A.A.S.H.T.O. (CURRENT)
LIVE LOAD	SEE PLANS
IMPACT ALLOWANCE	SEE A.A.S.H.T.O.
STRESS IN EXTREME FIBER OF	
STRUCTURAL STEEL - AASHTO M270 GRADE 36	20,000 LBS. PER SQ. IN.
- AASHTO M270 GRADE 50W	27,000 LBS. PER SQ. IN.
- AASHTO M270 GRADE 50	27,000 LBS. PER SQ. IN.
REINFORCING STEEL IN TENSION	
GRADE 60	24,000 LBS. PER SQ. IN.
CONCRETE IN COMPRESSION	1,200 LBS. PER SQ. IN.
CONCRETE IN SHEAR	SEE A.A.S.H.T.O.
STRUCTURAL TIMBER - TREATED OR	
UNTREATED - EXTREME FIBER STRESS	1,800 LBS. PER SQ. IN.
COMPRESSION PERPENDICULAR TO GRAIN OF TIMBER	375 LBS. PER SQ. IN.
EQUIVALENT FLUID PRESSURE OF EARTH	30 LBS. PER CU. FT. (MINIMUM)

MATERIAL AND WORKMANSHIP:

EXCEPT AS MAY OTHERWISE BE SPECIFIED ON PLANS OR IN THE SPECIAL PROVISIONS, ALL MATERIAL AND WORKMANSHIP SHALL BE IN ACCORDANCE WITH THE 2012 "STANDARD SPECIFICATIONS FOR ROADS AND STRUCTURES" OF THE N. C. DEPARTMENT OF TRANSPORTATION.

STEEL SHEET PILING FOR PERMANENT OR TEMPORARY APPLICATIONS SHALL BE HOT ROLLED.

CONCRETE:

UNLESS OTHERWISE REQUIRED ON PLANS, CLASS A CONCRETE SHALL BE USED FOR ALL PORTIONS OF ALL STRUCTURES WITH THE EXCEPTION THAT: CLASS AA CONCRETE SHALL BE USED IN BRIDGE SUPERSTRUCTURES, ABUTMENT BACKWALLS, AND APPROACH SLABS; AND CLASS B CONCRETE SHALL BE USED FOR SLOPE PROTECTION AND RIP RAP.

CONCRETE CHAMFERS:

UNLESS OTHERWISE NOTED ON THE PLANS, ALL EXPOSED CORNERS ON STRUCTURES SHALL BE CHAMFERED 3/4" WITH THE FOLLOWING EXCEPTIONS: TOP CORNERS OF CURBS MAY BE ROUNDED TO 1-1/2" RADIUS WHICH IS BUILT INTO CURB FORMS; CORNERS OF TRANSVERSE FLOOR EXPANSION JOINTS SHALL BE ROUNDED WITH A 1/4" FINISHING TOOL UNLESS OTHERWISE REQUIRED ON PLANS; AND CORNERS OF EXPANSION JOINTS IN THE ROADWAY FACES AND TOPS OF CURBS AND SIDEWALKS SHALL BE ROUNDED TO A 1/4" RADIUS WITH A FINISHING STONE OR TOOL UNLESS OTHERWISE REQUIRED ON PLANS.

DOWELS:

DOWELS WHEN INDICATED ON PLANS AS FOR CULVERT EXTENSIONS, SHALL BE EMBEDDED AT LEAST 12" INTO THE OLD CONCRETE AND GROUTED INTO PLACE WITH 1:2 CEMENT MORTAR.

ALLOWANCE FOR DEAD LOAD DEFLECTION, SETTLEMENT, ETC. IN CASTING SUPERSTRUCTURES:

BRIDGES SHALL BE BUILT ON THE GRADE OR VERTICAL CURVE SHOWN ON PLANS. SLABS, CURBS AND PARAPETS SHALL CONFORM TO THE GRADE OR CURVE.

ALL DIMENSIONS WHICH ARE GIVEN IN SECTION AND ARE AFFECTED BY DEAD LOAD DEFLECTIONS ARE DIMENSIONS AT CENTER LINE OF BEARING UNLESS OTHERWISE NOTED ON PLANS. IN SETTING FORMS FOR STEEL BEAM BRIDGES AND PRESTRESSED CONCRETE GIRDER BRIDGES, ADJUSTMENTS SHALL BE MADE DUE TO THE DEAD LOAD DEFLECTIONS FOR THE ELEVATIONS SHOWN. WHERE BLOCKS ARE SHOWN OVER BEAMS FOR BUILDING UP TO THE SLAB, THE VERTICAL DIMENSIONS OF THE BLOCKS SHALL BE ADJUSTED BETWEEN BEARINGS TO COMPENSATE FOR DEAD LOAD DEFLECTIONS, VERTICAL CURVE ORDINATE, AND ACTUAL BEAM CAMBER. WHERE BOTTOM OF SLAB IS IN LINE WITH BOTTOM OF TOP FLANGES, DEPTH OF SLAB BETWEEN BEARINGS SHALL BE ADJUSTED TO COMPENSATE FOR DEAD LOAD DEFLECTION, VERTICAL CURVE ORDINATE, AND ACTUAL BEAM CAMBER.

IN SETTING FALSEWORK AND FORMS FOR REINFORCED CONCRETE SPANS, AN ALLOWANCE SHALL BE MADE FOR DEAD LOAD DEFLECTIONS, SETTLEMENT OF FALSEWORK, AND PERMANENT CAMBER WHICH SHALL BE PROVIDED FOR IN ADDITION TO THE ELEVATIONS SHOWN. AFTER REMOVAL OF THE FALSEWORK, THE FINISHED STRUCTURES SHALL CONFORM TO THE PROFILE AND ELEVATIONS SHOWN ON THE PLANS AND CONSTRUCTION ELEVATIONS FURNISHED BY THE ENGINEER.

DETAILED DRAWINGS FOR FALSEWORK OR FORMS FOR BRIDGE SUPERSTRUCTURE AND ANY STRUCTURE OR PARTS OF A STRUCTURE AS NOTED ON THE PLANS SHALL BE SUBMITTED TO THE ENGINEER FOR APPROVAL BEFORE CONSTRUCTION OF THE FALSEWORK OR FORMS IS STARTED.

REINFORCING STEEL:

ALL REINFORCING STEEL SHALL BE DEFORMED. DIMENSIONS RELATIVE TO PLACEMENT OF REINFORCING ARE TO CENTERS OF BARS UNLESS OTHERWISE INDICATED IN THE PLANS. DIMENSIONS ON BAR DETAILS ARE TO CENTERS OF BARS OR ARE OUT TO OUT AS INDICATED ON PLANS.

WIRE BAR SUPPORTS SHALL BE PROVIDED FOR REINFORCING STEEL WHERE INDICATED ON THE PLANS. WHEN BAR SUPPORT PIECES ARE PLACED IN CONTINUOUS LINES, THEY SHALL BE SO PLACED THAT THE ENDS OF THE SUPPORTING WIRES SHALL BE LAPPED TO LOCK LEGS ON ADJOINING PIECES.

STRUCTURAL STEEL:

AT THE CONTRACTOR'S OPTION, HE MAY SUBSTITUTE 7/8" Ø SHEAR STUDS FOR THE 3/4" Ø STUDS SPECIFIED ON THE PLANS. THIS SUBSTITUTION SHALL BE MADE AT THE RATE OF 3 - 7/8" Ø STUDS FOR 4 - 3/4" Ø STUDS, AND STUD SPACING CHANGES SHALL BE MADE AS NECESSARY TO PROVIDE THE SAME EQUIVALENT NUMBER OF 7/8" Ø STUDS ALONG THE BEAM AS SHOWN FOR 3/4" Ø STUDS BASED ON THE RATIO OF 3 - 7/8" Ø STUDS FOR 4 - 3/4" Ø STUDS. STUDS OF THE LENGTH SPECIFIED ON THE PLANS MUST BE PROVIDED. THE MAXIMUM SPACING SHALL BE 2'-0".

EXCEPT AT THE INTERIOR SUPPORTS OF CONTINUOUS BEAMS WHERE THE COVER PLATE IS IN CONTACT WITH BEARING PLATE, THE CONTRACTOR MAY, AT HIS OPTION, SUBSTITUTE FOR THE COVER PLATES DESIGNATED ON THE PLANS COVER PLATES OF THE EQUIVALENT AREA PROVIDED THESE PLATES ARE AT LEAST 5/16" IN THICKNESS AND DO NOT EXCEED A WIDTH EQUAL TO THE FLANGE WIDTH LESS 2" OR A THICKNESS EQUAL TO 2 TIMES THE FLANGE THICKNESS. THE SIZE OF FILLET WELDS SHALL CONFORM TO THE REQUIREMENTS OF THE CURRENT ANSI/AASHTO/AWS "BRIDGE WELDING CODE". ELECTROSLAG WELDING WILL NOT BE PERMITTED.

WITH THE SOLE EXCEPTION OF EDGES AT SURFACES WHICH BEAR ON OTHER SURFACES, ALL SHARP EDGES AND ENDS OF SHAPES AND PLATES SHALL BE SLIGHTLY ROUNDED BY SUITABLE MEANS TO A RADIUS OF APPROXIMATELY 1/16 INCH OR EQUIVALENT FLAT SURFACE AT A SUITABLE ANGLE PRIOR TO PAINTING, GALVANIZING, OR METALLIZING.

HANDRAILS AND POSTS:

METAL STANDARDS AND FACES OF THE CONCRETE END POSTS FOR THE METAL RAIL SHALL BE SET NORMAL TO THE GRADE OF THE CURB, UNLESS OTHERWISE SHOWN ON PLANS. THE METAL RAIL AND TOPS OF CONCRETE POSTS USED WITH THE ALUMINUM RAIL SHALL BE BUILT PARALLEL TO THE GRADE OF THE CURB.

METAL HANDRAILS SHALL BE IN ACCORDANCE WITH THE PLANS. RAILS SHALL BE AS MANUFACTURED FOR BRIDGE RAILING. CASTINGS SHALL BE OF A UNIFORM APPEARANCE. FINS AND OTHER DEFORMATIONS RESULTING FROM CASTING OR OTHERWISE SHALL BE REMOVED IN A MANNER SO THAT A UNIFORM COLORING OF THE COMPLETED CASTING SHALL BE OBTAINED. CASTINGS WITH DISCOLORATIONS OR OF NON-UNIFORM COLORING WILL NOT BE ACCEPTED. CERTIFIED MILL REPORTS ARE REQUIRED FOR METAL RAILS AND POSTS.

SPECIAL NOTES:

GENERALLY, IN CASE OF DISCREPANCY, THIS STANDARD SHEET OF NOTES SHALL GOVERN OVER THE SPECIFICATIONS, BUT THE REMAINDER OF THE PLANS SHALL GOVERN OVER NOTES HEREON, AND SPECIAL PROVISIONS SHALL GOVERN OVER ALL. SEE SPECIFICATIONS ARTICLE 105-4.

ENGLISH

JANUARY, 1990

DATUM DESCRIPTION

THE LOCALIZED COORDINATE SYSTEM DEVELOPED FOR THIS PROJECT IS BASED ON THE STATE PLANE COORDINATES ESTABLISHED BY NCGS FOR MONUMENT "NOLES"
WITH NAD 83 STATE PLANE GRID COORDINATES OF NORTHING: 551679.48 (ft) EASTING: 1495609.339 (ft)
THE AVERAGE COMBINED GRID FACTOR USED ON THIS PROJECT (GROUND TO GRID) IS: .999840095
THE N.C. LAMBERT GRID BEARING AND LOCALIZED HORIZONTAL GROUND DISTANCE FROM "NOLES" TO -L- STATION 14+00.00 IS S 3° 52' 03.2" E, 1517.45'
ALL LINEAR DIMENSIONS ARE LOCALIZED HORIZONTAL DISTANCES
VERTICAL DATUM USED IS NGVD 29

RIGHT OF WAY AREA DATA

PARCEL NO.	PROPERTY OWNERS NAME	TOTAL ACREAGE	AREA TAKEN	AREA REMAINING RIGHT	AREA REMAINING LEFT	CONSTR. EASEMENT	PERMANENT DRAINAGE EASEMENT	TEMPORARY UTILITY EASEMENT
1	HAROLD EUGENE MULLIS & ELISSA M. MULLIS		2852 sf			2989 sf		
2	McCARRON HOMEOWNERS ASSOC. INC.					1228 sf		5668 sf
3	HOOD ROAD DEVELOPMENT, LLC		1897 sf			42 sf		2398 sf
4	RODNEY L. PURSER		3124 sf			875 sf		
5	LODESTAR TOWER OF CHARLOTTE, INC.		0.14 ac					7329 sf

PI Sta 12+77.00
Δ = 32° 17' 48.5" (LT)
D = 11° 34' 01.1"
L = 279.22'
T = 143.43'
R = 495.34'

GRAPHIC SCALE 50 0 50 100

PROJECT REFERENCE NO.	SHEET NO.
BK-5114	4
R/W SHEET NO.	

ROADWAY DESIGN ENGINEER — NORTH CAROLINA PROFESSIONAL SEAL 22606 ENGINEER DAVID C. WALLER 5-7-12

HYDRAULICS ENGINEER — NORTH CAROLINA PROFESSIONAL SEAL 19732 ENGINEER SHINCHEN FUNG 5-04-2012

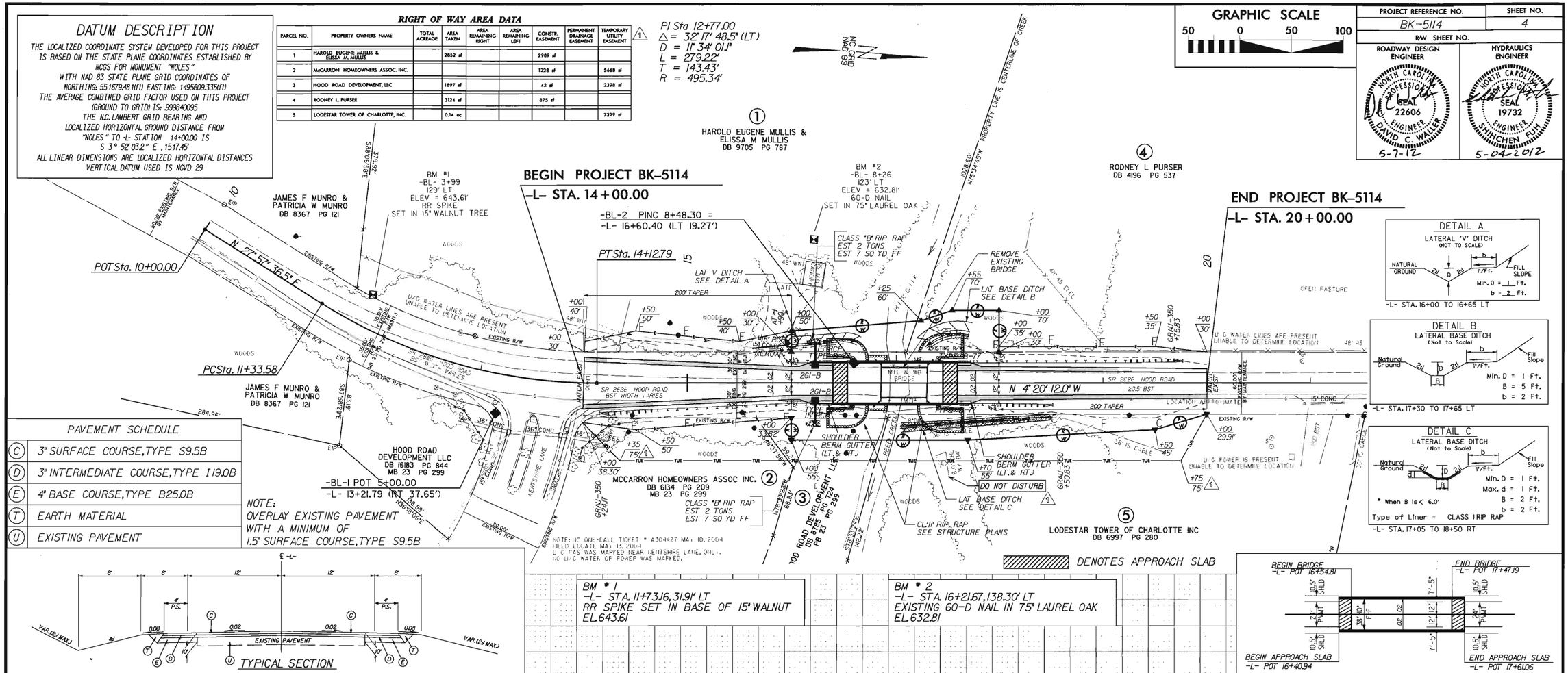

PAVEMENT SCHEDULE

C	3" SURFACE COURSE, TYPE S9.5B
D	3" INTERMEDIATE COURSE, TYPE I19.0B
E	4" BASE COURSE, TYPE B25.0B
T	EARTH MATERIAL
U	EXISTING PAVEMENT

NOTE:
OVERLAY EXISTING PAVEMENT WITH A MINIMUM OF 1.5" SURFACE COURSE, TYPE S9.5B

BM #1
-L- STA. 11+73.16, 31.91' LT
RR SPIKE SET IN BASE OF 15" WALNUT
EL. 643.61

BM #2
-L- STA. 16+21.67, 138.30' LT
EXISTING 60-D NAIL IN 75" LAUREL OAK
EL. 632.81

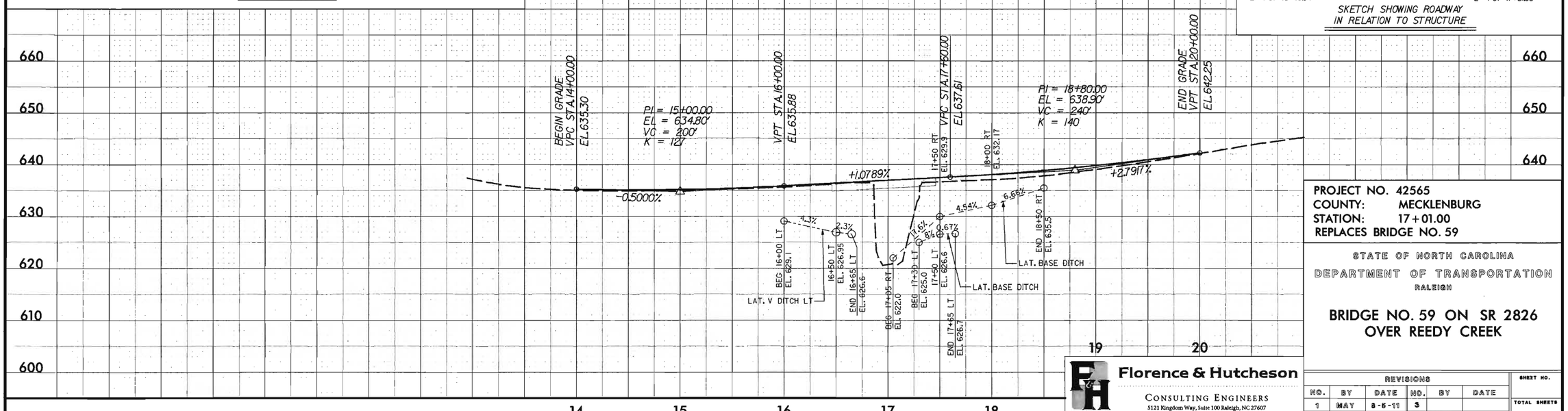

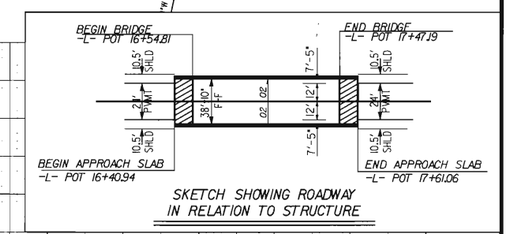

SKETCH SHOWING ROADWAY IN RELATION TO STRUCTURE

PROJECT NO. 42565
COUNTY: MECKLENBURG
STATION: 17+01.00
REPLACES BRIDGE NO. 59

STATE OF NORTH CAROLINA
DEPARTMENT OF TRANSPORTATION
RALEIGH

BRIDGE NO. 59 ON SR 2826 OVER REEDY CREEK

Florence & Hutcheson
CONSULTING ENGINEERS
5121 Kingdom Way, Suite 100 Raleigh, NC 27607
NC License No: F-0258

REVISIONS						SHEET NO.
NO.	BY	DATE	NO.	BY	DATE	TOTAL SHEETS
1	MAY	8-5-11	3			
2			4			

PROJECT REFERENCE NO.	SHEET NO.
42561	TMP-1

R/W SHEET NO.

NORTH CAROLINA PROFESSIONAL SEAL 15876 ENGINEER MICHAEL L. LEWIS
5-4-12

ROADWAY STANDARD DRAWINGS

THE FOLLOWING ROADWAY STANDARDS AS APPEAR IN "ROADWAY STANDARD DRAWINGS"- ROADWAY DESIGN UNIT-N.C. DEPARTMENT OF TRANSPORTATION-RALEIGH, N.C., DATED JANUARY 2012 ARE APPLICABLE TO THIS PROJECT AND BY REFERENCE HEREBY ARE CONSIDERED A PART OF THESE PLANS:

STD. NO.	TITLE
1101.03	TEMPORARY ROAD CLOSURES
1101.04	TEMPORARY SHOULDER CLOSURES
1145.01	BARRICADES
1205.01	PAVEMENT MARKINGS - LINE TYPES & OFFSETS
1205.02	PAVEMENT MARKINGS - 2 LANE & MULTILANE ROADWAYS
1205.12	PAVEMENT MARKINGS - BRIDGES
1250.01	PAVEMENT MARKER SPACING
1251.01	RAISED PAVEMENT MARKERS (TEMPORARY & PERMANENT)
1261.01	GUARDRAIL & BARRIER DELINEATOR SPACING
1261.02	GUARDRAIL & BARRIER DELINEATOR TYPES
1262.01	GUARDRAIL END DELINEATION

GENERAL NOTES

CHANGES MAY BE REQUIRED WHEN PHYSICAL DIMENSIONS IN THE DETAIL DRAWINGS, STANDARD DETAILS AND ROADWAY DETAILS ARE NOT ATTAINABLE TO MEET FIELD CONDITIONS OR RESULT IN DUPLICATE, OR UNDESIRED OVERLAPPING OF DEVICES. MODIFICATION MAY INCLUDE: MOVING, SUPPLEMENTING, COVERING OR REMOVAL OF DEVICES, AS DIRECTED BY THE ENGINEER.

THE FOLLOWING GENERAL NOTES APPLY AT ALL TIMES FOR THE DURATION OF THE CONSTRUCTION PROJECT, EXCEPT WHEN OTHERWISE NOTED IN THE PLAN, OR DIRECTED BY THE ENGINEER.

TRAFFIC PATTERN ALTERATIONS

A) NOTIFY THE ENGINEER TWENTY ONE (21) CALENDAR DAYS PRIOR TO ANY TRAFFIC PATTERN ALTERATION.

SIGNING

B) STATE FORCES WILL BE RESPONSIBLE FOR PERMANENT SIGNING.

C) STATE FORCES WILL PROVIDE SIGNING AND DEVICES REQUIRED TO CLOSE THE ROAD ACCORDING TO THE ROADWAY STANDARD DRAWINGS AND TRAFFIC CONTROL PLANS.

STATE FORCES WILL PROVIDE SIGNING REQUIRED FOR THE OFF-SITE DETOUR ROUTE AS SHOWN IN THE TRAFFIC CONTROL PLANS.

D) STATE FORCES WILL COVER OR REMOVE ALL SIGNS AND DEVICES REQUIRED TO CLOSE THE ROAD WHEN ROAD CLOSURE IS NOT IN OPERATION.

STATE FORCES WILL COVER OR REMOVE ALL SIGNS REQUIRED FOR THE OFF-SITE DETOUR WHEN THE DETOUR IS NOT IN OPERATION.

E) ENSURE ALL NECESSARY SIGNING IS IN PLACE PRIOR TO ALTERING ANY TRAFFIC PATTERN.

TRAFFIC CONTROL DEVICES

F) STATE FORCES WILL PLACE TYPE III BARRICADES, WITH "ROAD CLOSED" SIGN R11-2 ATTACHED, OF SUFFICIENT LENGTH TO CLOSE ENTIRE ROADWAY.

PAVEMENT MARKINGS AND MARKERS

G) INSTALL PAVEMENT MARKINGS AND PAVEMENT MARKERS ON THE FINAL SURFACE AS FOLLOWS:

ROAD NAME	MARKING	MARKER
1. SR 2828 (HOOD RD.)	THERMOPLASTIC	PERMANENT RAISED

H) TIE PROPOSED PAVEMENT MARKING LINES TO EXISTING PAVEMENT MARKING LINES.

LOCAL NOTES

1) CONTRACTOR TO MAINTAIN ACCESS TO ALL DRIVEWAYS, WITHIN THE PROJECT LIMITS, AT ALL TIMES.

PHASE I

STEP 1: - STATE FORCES WILL INSTALL ALL DETOUR SIGNING KEEPING SIGNS COVERED (SEE SHEET TMP-2).

STEP 2: - CLOSE SR 2828 (HOOD RD.) TO TRAFFIC, UNCOVER ALL DETOUR SIGNING AND SHIFT TRAFFIC TO DETOUR (SEE SHEET TMP-2).

STEP 3: - DISMANTLE AND REMOVE EXISTING BRIDGE NUMBER 59.

STEP 4: - COMPLETE CONSTRUCTION OF PROPOSED STRUCTURE, APPROACH ROADWAY TIE-INS, AND ASSOCIATED ITEMS.

STEP 5: - PLACE FINAL PAVEMENT MARKINGS (THERMOPLASTIC) AND FINAL MARKERS (PERMANENT RAISED) ON SR 2828 (HOOD RD.).

STEP 6: - STATE FORCES WILL REMOVE ALL DETOUR SIGNING, ALL TRAFFIC CONTROL DEVICES AND OPEN SR 2828 (HOOD RD.) TO TRAFFIC.

FINAL PAV'T MARKING SCHEDULE

SYMBOL	DESCRIPTION	QUANTITY BREAKDOWN	PAY ITEM	TOTAL QUANTITY
		PAVEMENT MARKING LINES		
			THERMOPLASTIC (4", 60mils)	
TA	WHITE EDGELINE	1,200 LF	TOTAL	1,200 LF
			THERMOPLASTIC (4", 120mils)	
TI	YELLOW DOUBLE CENTER LINE	1,200 LF	TOTAL	1,200 LF
		PAVEMENT MARKERS		
			PERMANENT RAISED	
MA	YELLOW & YELLOW	8 EA	TOTAL	8 EA

PROJECT NO. 42561
COUNTY: MECKLENBURG
STATE: 17+01.00

STATE OF NORTH CAROLINA
DEPARTMENT OF TRANSPORTATION
RALEIGH

BRIDGE NO. 59 ON SR 2868
OVER REEDY CREEK

Florence & Hutcheson
CONSULTING ENGINEERS
5171 Kingston Pike, Suite 100 Raleigh, NC 27607
NC License No. F-0586

REVISIONS						
NO.	BY	DATE	NO.	BY	DATE	
1			3			
2			4			

PROJECT REFERENCE NO.	SHEET NO.
42561	TMP-2
R/W SHEET NO.	

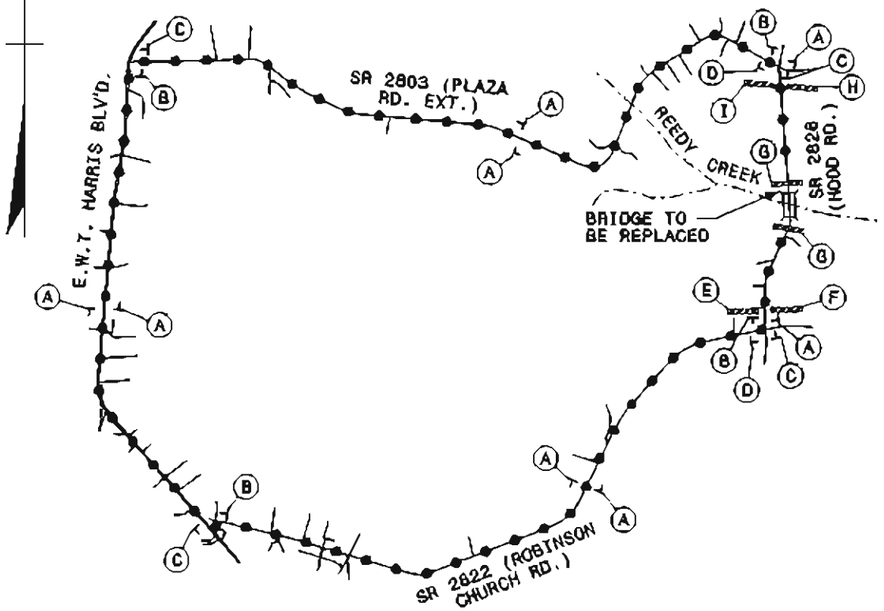

SIGN NUMBER: none
TYPE: D
QUANTITY: SEE PLANS

SIGN WIDTH: 4'-0"
HEIGHT: 1'-6"
TOTAL AREA: 6.0 Sq.Ft.

BORDER TYPE: INSET
RECESS: 0.375"
WIDTH: 0.63"
RADII: 1.5"

NO. X BARS:
LENGTH:

BACKG COLOR: Fluorescent Orange
COPY COLOR: Black

SYMBOL	X	Y	WID	HT

MAT'L: 0.080" (2.0 mm) ALUMINUM

DESIGN BY: GEF
PROJECT ID: 42561

CHECKED BY: F & H
DIV: 10

DATE: Apr 03, 2012

USE NOTES: 1 & 2

1. Legend and border shall be direct applied black non-reflective sheeting.
2. Background shall be Type VII, VIII, or IX (prismatic) fluorescent orange retroreflective sheeting.

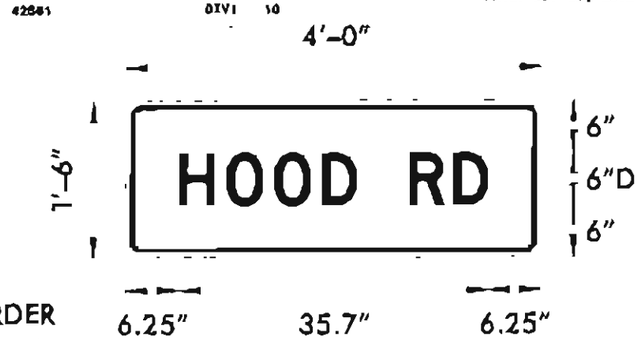

BORDER
R=1.5"
TH=0.63"
IN=0.375"

Spacing factor is 1 unless specified otherwise

LETTER POSITIONS

Letter locations are panel edge to lower left corner

H	O	O	D		R	D
6.2	11.6	17	22.5	28.7	32.7	37.8

Series/Size
Text Length
D 2000
35.7

FILENAME: D0T0SH

NORTH CAROLINA D.O.T. SIGN DETAIL

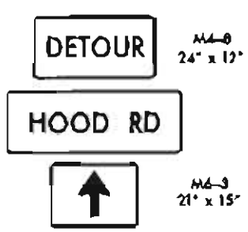

(A)

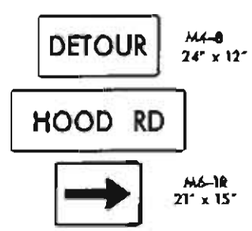

(B)

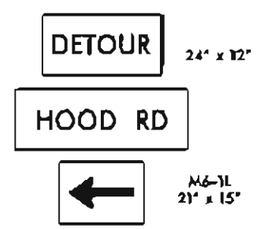

(C)

(D)

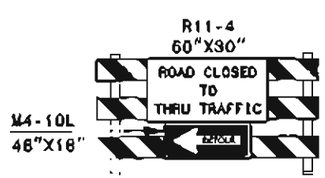

TYPE III BARRICADE

(E)

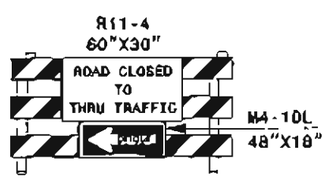

TYPE III BARRICADE

(F)

TYPE III BARRICADE

(G)

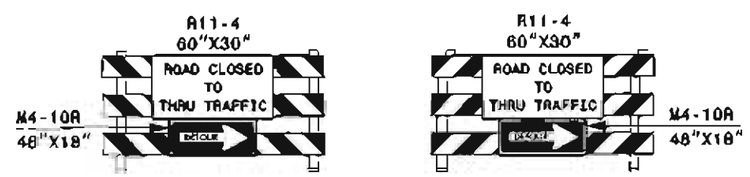

TYPE III BARRICADE

(H)

TYPE III BARRICADE

(I)

PRELIMINARY PLANS
DO NOT USE FOR CONSTRUCTION

LEGEND

DETOUR ROUTE

PROJECT NO. 42561
COUNTY: MECKLENBURG
STATION: 17+01.00

STATE OF NORTH CAROLINA
DEPARTMENT OF TRANSPORTATION
RALEIGH

BRIDGE NO. 59 ON SR 2826
OVER REEDY CREEK

Florence & Hutcheson
CONSULTING ENGINEERS

REVISIONS						
NO.	BY	DATE	NO.	BY	DATE	
1			3			
2			4			

STATE	PROJECT NO.	SHEET NO.	TOTAL SHEETS
N.C.		TCP-2	
F.A. PROJECT NO.			

NOTE: USE SIGN R11-4 IF 1 MILE OR LESS TO ROAD CLOSURE.

NOTE: WING BARRICADES WITH SIGN R11-3 SHOULD ALSO BE USED AT SIDE ROADS BETWEEN THE DETOUR POINT AND THE POINT OF CLOSURE.

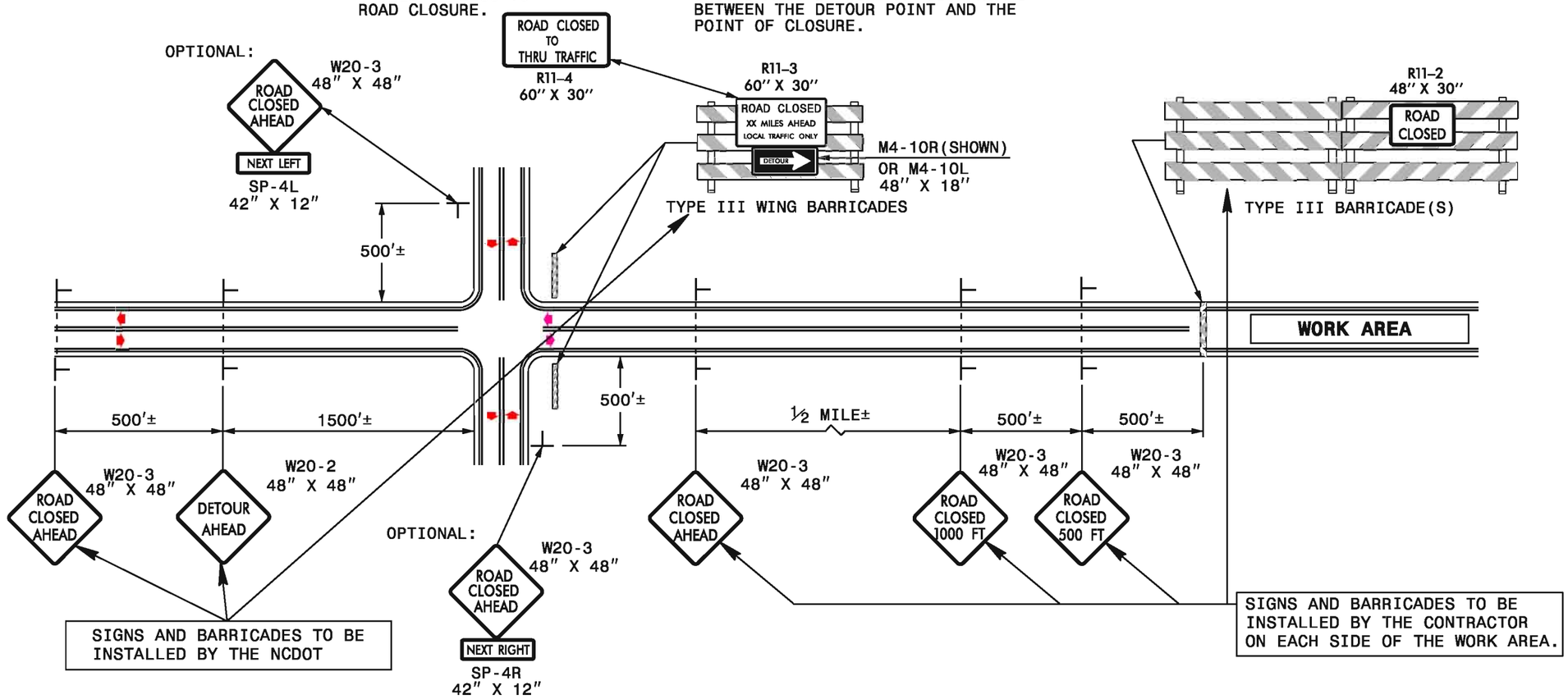

GENERAL NOTES

1-IF NECESSARY USE THIS STD. FOR TWO-LANE, TWO-WAY, AND MULTILANE DIVIDED AND UNDIVIDED ROADWAYS.

2-INSTALLATION OF DETOUR ROUTING PANELS, TEMPORARY ROUTE MARKERS, DESTINATION SIGNS, AND ANY NECESSARY MODIFICATIONS TO EXISTING OR PROPOSED REGULATORY OR WARNING SIGNS WILL BE MADE BY NCDOT FORCES UNLESS OTHERWISE DESIGNATED IN THE PLANS. PROVIDE A MINIMUM 21 CALENDAR DAY NOTICE TO STATE FORCES BEFORE A ROADWAY IS CLOSED TO TRAFFIC SUCH THAT THE NECESSARY PROVISIONS CAN BE MADE TO INSTALL DETOUR ROUTE SIGNS, INFORM LOCAL EMERGENCY AND LAW ENFORCEMENT PERSONNEL, SCHOOLS, OR ANY OTHER PARTIES AFFECTED BY THE ROAD CLOSURE.

3-INSTALL SIGNS BEFORE THE BARRICADES WHEN CLOSING THE ROADWAY TO TRAFFIC. REMOVE BARRICADES BEFORE SIGNS WHEN OPENING THE ROADWAY TO TRAFFIC. INSTALL/REMOVE SIGNS AND BARRICADES WITHIN THE SAME CALENDAR DAY.

4-USE ADDITIONAL TYPE III BARRICADES IN STAGGERED LOCATIONS SUPPLEMENTED WITH SIGN R11-4 "ROAD CLOSED TO THRU TRAFFIC" IN THE EVENT THAT TRAFFIC MUST BE MAINTAINED BEYOND THE DETOUR POINT.

5-DO NOT DISPLAY FRACTIONS OR DECIMALS ON SIGN R11-3 "ROAD CLOSED XX MILES AHEAD".

6-POSITION WING BARRICADES ON THE SHOULDERS AND SLOPE THE STRIPES DOWNWARD IN THE DIRECTION TOWARD WHICH TRAFFIC MUST TURN IN DETOURING.

7-USE PORTABLE SIGNS IF ROAD CLOSURE IS TO BE IMPLEMENTED FOR LESS THAN ONE DAY OR FOR EMERGENCIES.

LEGEND

- STATIONARY SIGN
- DIRECTION OF TRAFFIC FLOW

TEMPORARY ROAD CLOSURE
CLOSURE BEYOND DETOUR POINT

		REVISIONS
SCALE	-NA-	
DATE	1-19-10	
DWG. BY	TWB	
APPROVED	RWB	

EROSION CONTROL PLAN

PROJECT REFERENCE NO.	SHEET NO.
BK-5114	EC-1
R/W SHEET NO.	
ROADWAY DESIGN ENGINEER	HYDRAULICS ENGINEER

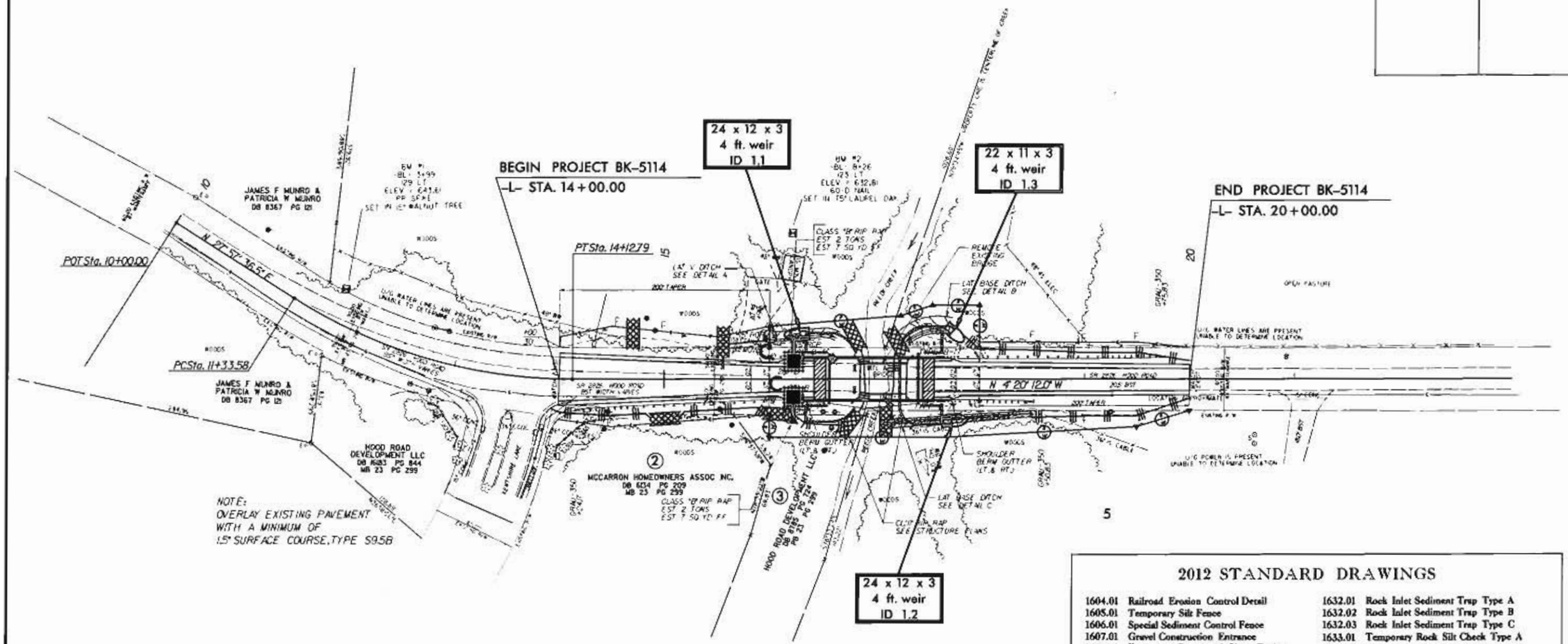

Std. #	Description	Symbol
1605.01	Temporary Silt Fence	
1607.01	Gravel Construction Entrance	
1622.01	Temporary Berms and Slope Drains	
1630.06	Special Stilling Basins	
1632.03	Rock Inlet Sediment Trap Type C	
1633.01	Temporary Rock Silt Check Type A	
1634.02	Temporary Rock Sediment Dam Type B	

THESE EROSION AND SEDIMENT CONTROL PLANS COMPLY WITH THE REGULATIONS SET FORTH BY THE NCG-010000 GENERAL CONSTRUCTION PERMIT EFFECTIVE AUGUST 3, 2011 ISSUED BY THE NORTH CAROLINA DEPARTMENT OF ENVIRONMENT AND NATURAL RESOURCES DIVISION OF WATER QUALITY.

ROADSIDE ENVIRONMENTAL UNIT
DEPARTMENT OF TRANSPORTATION
DIVISION OF HIGHWAYS
RALEIGH, N.C.

2012 STANDARD SPECIFICATIONS

NOTES: ANY DEVIATION FROM OPTIONS GIVEN WILL REQUIRE PRIOR APPROVAL BY ENGINEER.

ADDITIONAL EROSION CONTROL DEVICES MAY NEED TO BE INSTALLED AS DIRECTED BY THE ENGINEER.

2012 STANDARD DRAWINGS

1604.01	Railroad Erosion Control Detail	1632.01	Rock Inlet Sediment Trap Type A
1605.01	Temporary Silt Fence	1632.02	Rock Inlet Sediment Trap Type B
1606.01	Special Sediment Control Fence	1632.03	Rock Inlet Sediment Trap Type C
1607.01	Gravel Construction Entrance	1633.01	Temporary Rock Silt Check Type A
1622.01	Temporary Berms and Slope Drains	1633.02	Temporary Rock Silt Check Type B
1630.01	Riser Basin	1634.01	Temporary Rock Sediment Dam Type A
1630.02	Silt Basin Type B	1634.02	Temporary Rock Sediment Dam Type B
1630.03	Temporary Silt Ditch	1635.01	Rock Pipe Inlet Sediment Trap Type A
1630.04	Stilling Basin	1635.02	Rock Pipe Inlet Sediment Trap Type B
1630.05	Temporary Diversion	1640.01	Coir Fiber Baffle
1630.06	Special Stilling Basin	1645.01	Temporary Stream Crossing
1631.01	Matting Installation		

PROJECT NO. 42565
COUNTY: MECKLENBURG
STATION: 17+01.00
REPLACES BRIDGE NO. 59

STATE OF NORTH CAROLINA
DEPARTMENT OF TRANSPORTATION
RALEIGH

BRIDGE NO. 59 ON SR 2826
OVER REEDY CREEK

REVISIONS						SHEET NO.
NO.	BY	DATE	NO.	BY	DATE	1
1			3			TOTAL SHEETS
2			4			2

PROJECT REFERENCE NO.	SHEET NO.
BK-5114	EC-2

DIVISION OF HIGHWAYS
STATE OF NORTH CAROLINA

SOIL STABILIZATION TIMEFRAMES

SITE DESCRIPTION	STABILIZATION TIME	TIMEFRAME EXCEPTIONS
PERIMETER DIKES, SWALES, DITCHES AND SLOPES	7 DAYS	NONE
HIGH QUALITY WATER (HQW) ZONES	7 DAYS	NONE
SLOPES STEEPER THAN 3:1	7 DAYS	IF SLOPES ARE 10' OR LESS IN LENGTH AND ARE NOT STEEPER THAN 2:1, 14 DAYS ARE ALLOWED.
SLOPES 3:1 OR FLATTER	14 DAYS	7 DAYS FOR SLOPES GREATER THAN 50' IN LENGTH.
ALL OTHER AREAS WITH SLOPES FLATTER THAN 4:1	14 DAYS	NONE, EXCEPT FOR PERIMETERS AND HQW ZONES.

PROJECT NO. 42565
COUNTY: MECKLENBURG
STATION: 17+01.00
REPLACES BRIDGE NO. 59

STATE OF NORTH CAROLINA
DEPARTMENT OF TRANSPORTATION
RALEIGH

BRIDGE NO. 59 ON SR 2826
OVER REEDY CREEK

REVISIONS						SHEET NO.
NO.	BY	DATE	NO.	BY	DATE	2
1			3			TOTAL SHEETS
2			4			2

0 10	PROJ. REFERENCE NO.	SHEET NO.
	42561	X-1

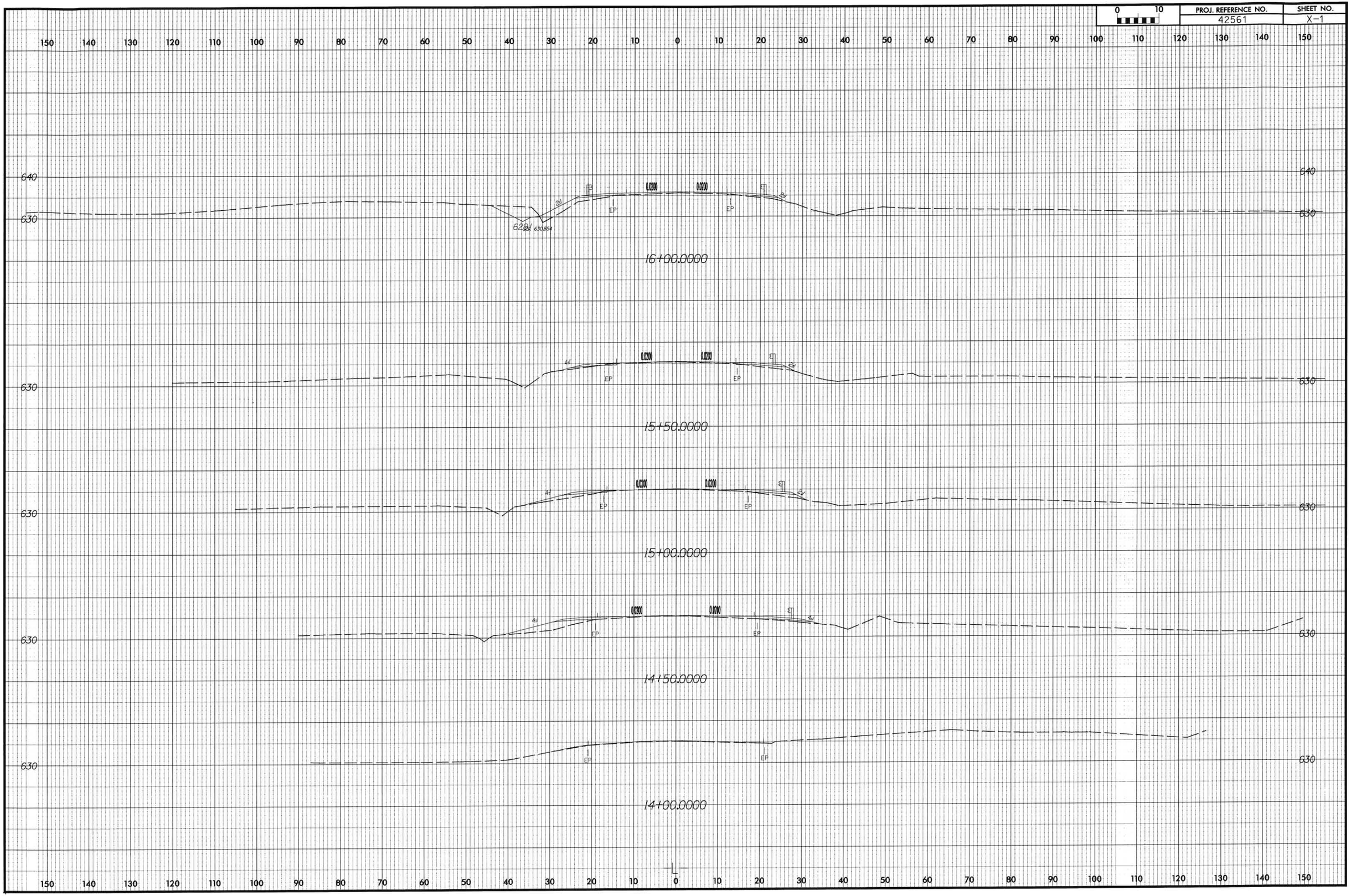

0 10	PROJ. REFERENCE NO.	SHEET NO.
	42561	X-2

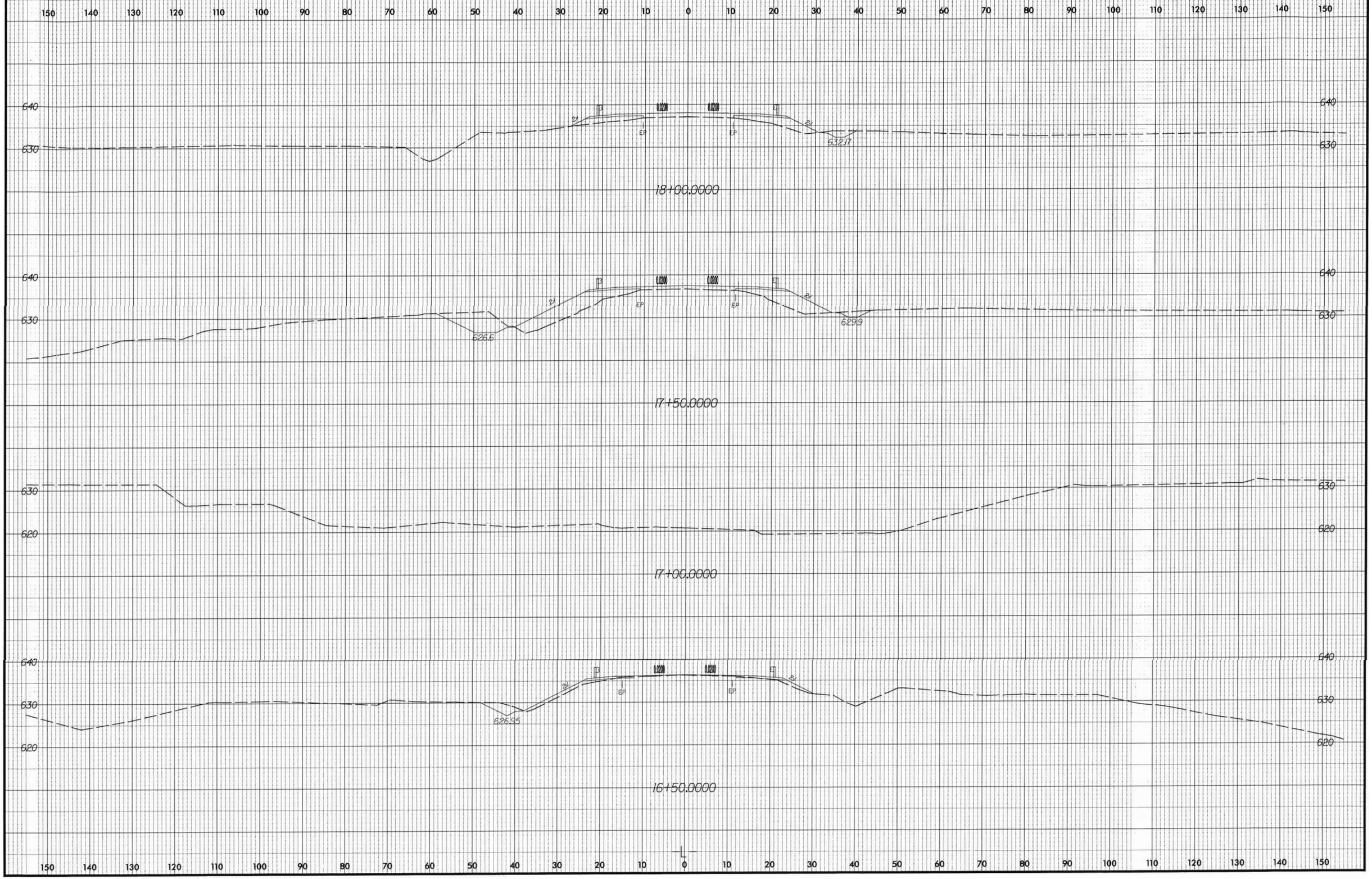

PROJ. REFERENCE NO.	SHEET NO.
42561	X-3