CONTRACT NO.: D000122 TIP: B-4644

STATE	STATE PROJECT REFERENCE NO.	SHEET NO.	TOTAL SHEETS
N.C.	B-4644	1	

STATE PROJECT NO.	F.A. PROJ. NO.	DESCRIPTION
33811.1.1	BRZ-1934(1)	P.E.
33811.2.1	BRZ-1934(1)	R/W
33811.3.1	BRZ-1934(1)	CONSTRUCTION

STATE OF NORTH CAROLINA
DIVISION OF HIGHWAYS

STANLY COUNTY

LOCATION: SR 1934 BRIDGE NO. 57 OVER HARDY CREEK

TYPE OF WORK: BRIDGE REPLACEMENT WITH PRESTRESSED CONCRETE CORED SLAB SUPERSTRUCTURE ON STEEL PILE END BENTS AND ROADWAY APPROACHES

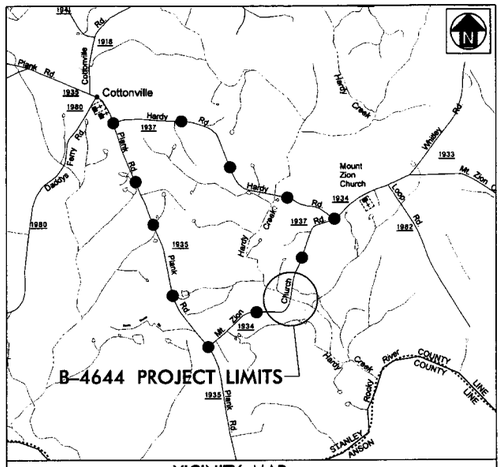

VICINITY MAP
(NOT TO SCALE)
OFFSITE DETOUR ROUTE

*DESIGN EXCEPTION: FOR
DESIGN SPEED
MAXIMUM GRADE
VERTICAL K FACTOR

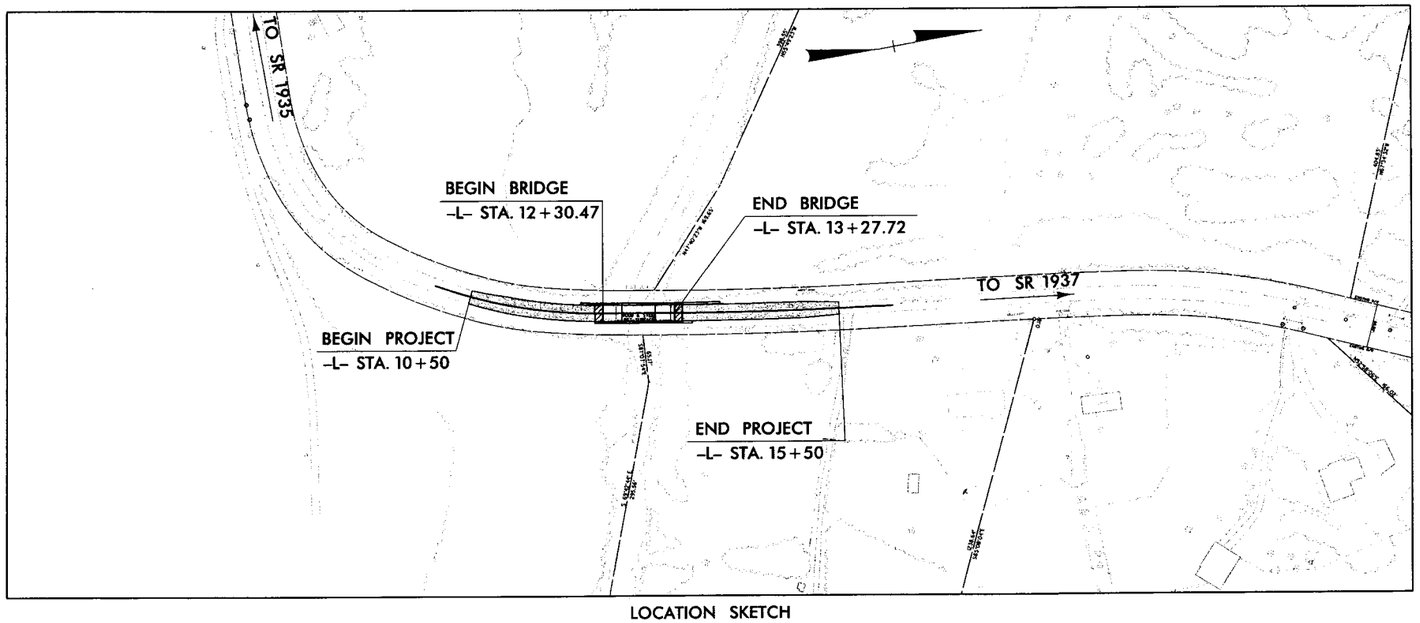

LOCATION SKETCH

STATE OF NORTH CAROLINA DEPARTMENT OF TRANSPORTATION

DESIGN DATA

ADT 2005 = 200

ADT 2025 = 300

V = 30 MPH

PROJECT LENGTH

LENGTH ROADWAY TIP PROJECT = 0.077 MILE

LENGTH STRUCTURE TIP PROJECT = 0.018 MILE

TOTAL LENGTH TIP PROJECT = 0.095 MILE

BRIDGE MANAGEMENT UNIT

NORTH CAROLINA DEPARTMENT OF TRANSPORTATION

2006 STANDARD SPECIFICATIONS

LETTING DATE:
MAY 31, 2011

DAN HOLDERMAN, PE
STATE BRIDGE MANAGEMENT ENGINEER

NCDOT CONTACT:

MIKE SUMMERS
BRIDGE MANAGEMENT PROJECT MANAGER

NORTH CAROLINA PROFESSIONAL SEAL 19831 ENGINEER DAVID B. SIMPSON, JR.
4-28-11

DAVID B. SIMPSON, JR., PE
DESIGN ENGINEER
SIMPSON ENGINEERS & ASSOCIATES
LICENSE C-2521

Prepared in the Office of:

SIMPSON ENGINEERS & ASSOCIATES
5520 Dillard Drive
Suite 120
Cary, NC 27518
(919) 852-0468
(919) 852-0598 (Fax)
www.simpsonengr.com

GIBSON ENGINEERS, PC
PO Box 700
Fuquay-Varina, NC 27526
(919) 552-2253
(919) 552-2254 (Fax)
www.gibsonengineers.com

4/28/2011
2:21:43 PM
R:\Roadway\Proj\b4644_rdy_tsh.dgn
ph56835

STANLY COUNTY (BRIDGE #57) TIP: B-4644

EXISTING BRIDGE NO. 57
19'-4" CLEAR ROADWAY
2 SPANS WITH OVERALL LENGTH OF 76.2'
WOOD AND STEEL W/BST SURFACE

BM 2: RR SPIKE IN BASE OF 18" OAK
-BL- STA. 21+30.00 LEFT 60'
-L- STA. 12+24.59 LEFT 48.90"
N = 522490.00 E = 1651049.00
EL = 240.63'

HYDROGRAPHIC DATA:

DESIGN DISCHARGE -	2800 CFS
FREQUENCY OF DESIGN FLOOD -	25 YEAR
DESIGN HIGH WATER ELEVATION -	238.8
DRAINAGE AREA -	15.2 SQ. MI.
BASIC DISCHARGE (Q 100) -	4100 CFS
BASIC HIGH WATER ELEVATION -	241.1

OVERTOPPING FLOOD DATA:

OVERTOPPING DISCHARGE -	5400 CFS
FREQUENCY OF OVERTOPPING FLOOD -	500+ YEAR
OVERTOPPING FLOOD ELEVATION -	244.0

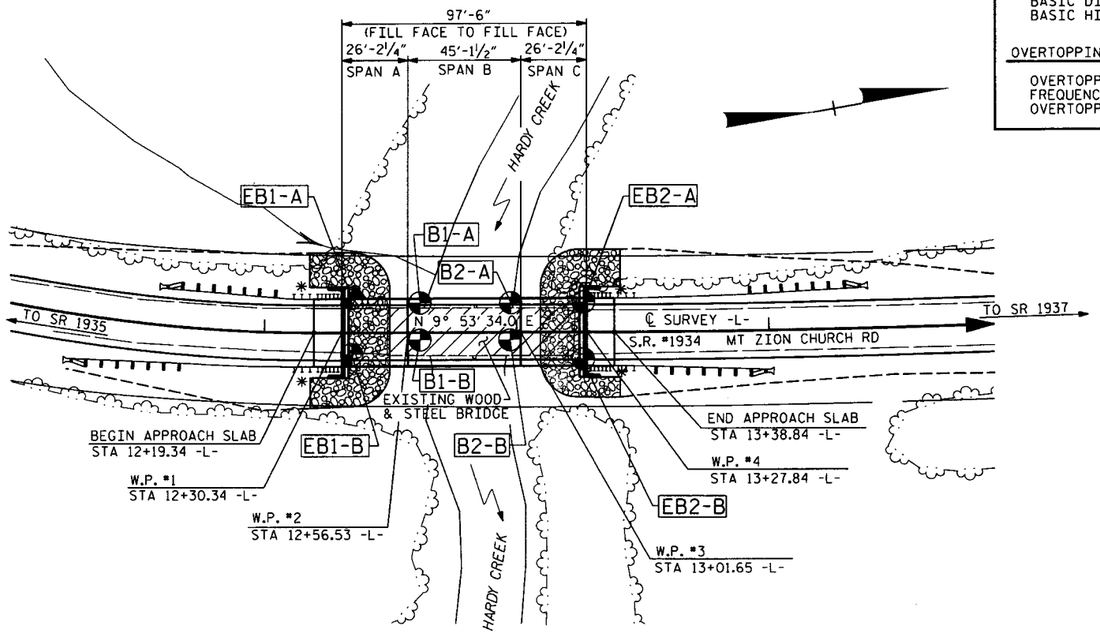

PLAN

SCALE : 1" = 30'

DENOTES GEO-TECH BORE HOLE LOCATIONS.

* DENOTES GUARDRAIL CONNECTION REQ'D., SEE "GUARDRAIL ANCHOR UNIT" SHEET.

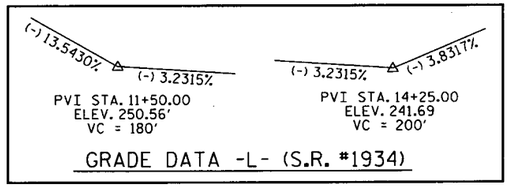

GRADE DATA -L- (S.R. #1934)

NOTES

FOR EROSION CONTROL MEASURES, SEE EROSION CONTROL PLANS.

REMOVAL OF THE EXISTING BRIDGE SHALL BE PERFORMED SO AS NOT TO ALLOW DEBRIS TO FALL INTO THE WATER. THE CONTRACTOR SHALL REMOVE THE BRIDGE AND SUBMIT PLANS FOR THE DEMOLITION IN ACCORDANCE WITH ARTICLE 402-2 OF THE STANDARD SPECIFICATIONS.

THE SUBSTRUCTURE OF THE EXISTING BRIDGE INDICATED ON THE PLANS IS FROM THE BEST INFORMATION AVAILABLE. SINCE THIS INFORMATION IS SHOWN FOR THE CONVENIENCE OF THE CONTRACTOR, THE CONTRACTOR SHALL HAVE NO CLAIM WHATSOEVER AGAINST THE DEPARTMENT OF TRANSPORTATION FOR ANY DELAYS OR ADDITIONAL COST INCURRED BASED ON DIFFERENCES BETWEEN THE EXISTING BRIDGE SUBSTRUCTURE SHOWN ON THE PLANS AND THE ACTUAL CONDITIONS AT THE PROJECT SITE.

THIS STRUCTURE HAS BEEN DESIGNED IN ACCORDANCE WITH HEC 18, "EVALUATING SCOUR AT BRIDGES". NOVEMBER 1995.

THIS BRIDGE HAS BEEN DESIGNED IN ACCORDANCE WITH THE REQUIREMENTS OF THE STANDARD SPECIFICATIONS FOR SEISMIC DESIGN OF HIGHWAY BRIDGES FOR SEISMIC CATEGORY A.

IN AS MUCH AS THE PAINT SYSTEM ON THE EXISTING STRUCTURAL STEEL CONTAINS LEAD, THE CONTRACTOR'S ATTENTION IS DIRECTED TO ARTICLE 107-1. OF THE STANDARD SPECIFICATIONS. ANY COSTS RESULTING FROM COMPLIANCE WITH APPLICABLE STATE OR FEDERAL REGULATIONS PERTAINING TO HANDLING OF MATERIALS CONTAINING LEAD BASED PAINT SHALL BE INCLUDED IN THE BID PRICE FOR "REMOVAL OF EXISTING STRUCTURE AT STATION 12+79.09".

WHEN DRIVING PILES, THE MAXIMUM BLOW COUNT SHALL NOT BE EXCEEDED.

THIS STRUCTURE HAS BEEN DESIGNED IN ACCORDANCE WITH FHWA'S TECHNICAL ADVISORY T5140.20 (SCOUR AT BRIDGES).

DRIVE PILES AT END BENT NO. 1 TO A REQUIRED BEARING CAPACITY OF 100 TONS PER PILE. THE REQUIRED BEARING CAPACITY IS EQUAL TO THE ALLOWABLE BEARING CAPACITY WITH A MINIMUM FACTOR OF SAFETY OF TWO. THE ALLOWABLE BEARING CAPACITY FOR PILES AT END BENT NO. 1 IS 50 TONS PER PILE.

DRIVE PILES AT END BENT NO. 2 TO A REQUIRED BEARING CAPACITY OF 100 TONS PER PILE. THE REQUIRED BEARING CAPACITY IS EQUAL TO THE ALLOWABLE BEARING CAPACITY WITH A MINIMUM FACTOR OF SAFETY OF TWO. THE ALLOWABLE BEARING CAPACITY FOR PILES AT END BENT NO. 2 IS 50 TONS PER PILE.

THE SCOUR CRITICAL ELEVATIONS FOR BENT NO. 1 AND BENT NO. 2 ARE THE BOTTOM OF FOOTING ELEVATION. BRIDGE MAINTENANCE USES THE SCOUR CRITICAL ELEVATIONS TO MONITOR POSSIBLE SCOUR PROBLEMS DURING THE LIFE OF THE STRUCTURE.

THE REQUIRED BEARING CAPACITIES FOR THE SPREAD FOOTINGS AT BENT NO. 1 AND BENT NO. 2 ARE 15 TSF. CHECK FIELD CONDITIONS FOR THE REQUIRED END BEARING CAPACITY JUST PRIOR TO PLACING CONCRETE.

THE ALLOWABLE BEARING CAPACITIES FOR SPREAD FOOTINGS AT BENT NO. 1 AND BENT NO. 2 ARE 5 TSF.

TO PROVIDE PROTECTION FROM POSSIBLE SCOUR, DO NOT CONSTRUCT SPREAD FOOTINGS AT BENT NO. 1 AND BENT NO. 2 AT ELEVATIONS HIGHER THAN SHOWN ON THE PLANS.

CARRY SPREAD FOOTINGS AT BENT NO. 1 AND BENT NO. 2 AT LEAST 12 IN. INTO ROCK WITH A MINIMUM THICKNESS AS SHOWN ON THE PLANS.

THE QUANTITY OF RIP RAP TO BE PAID FOR WILL BE THE ACTUAL NUMBER OF TONS OF EACH CLASS OF RIP RAP WHICH HAS BEEN INCORPORATED INTO THE COMPLETED AND ACCEPTED WORK. THE RIP RAP WILL BE MEASURED BY BEING WEIGHED IN TRUCKS ON CERTIFIED PLATFORM SCALES OR OTHER CERTIFIED WEIGHING DEVICES. THE QUANTITY OF RIP RAP WILL BE PAID FOR AT THE CONTRACT UNIT PRICE PER TON.

PLAIN RIP RAP CLASS II (2'-0" THICK) & FILTER FABRIC

END BENT #1	165 TONS &	145 SY FILTER FABRIC
END BENT #2	150 TONS &	135 SY FILTER FABRIC
TOTAL	315 TONS &	280 SY FILTER FABRIC

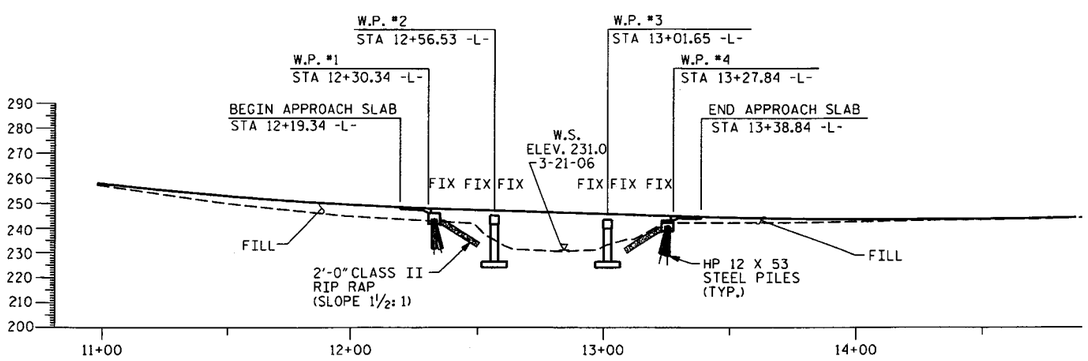

PROFILE ALONG ℄ SURVEY

SCALE : 1" = 30'

WBS NO. 33811.3.1

STANLY COUNTY

STATION: 12+79.09-L-

REPLACES BRIDGE NO. 57

NORTH CAROLINA PROFESSIONAL SEAL 023908 ENGINEER MARK A. AVERETTE
4-28-11

PLANS PREPARED BY:

SIMPSON ENGINEERS & ASSOCIATES

5520 Dillard Drive
Suite 120
Cary, NC 27518
(919) 852-0468
(919) 852-0598 (Fax)
www.simpsonengr.com
LICENSURE NO. C-2521

STATE OF NORTH CAROLINA
DEPARTMENT OF TRANSPORTATION
RALEIGH

GENERAL DRAWING
(BRIDGE ON 1934 OVER HARDY CREEK)

27'-0" CLEAR ROADWAY - 90° SKEW

REVISIONS						SHEET NO.
NO.	BY:	DATE:	NO.	BY:	DATE:	2
1			3			TOTAL SHEETS
2			4			31

DRAWN BY : D. G. VESTER DATE : 11-10
CHECKED BY : J. A. BATTS DATE : 11-10

4/28/2011 3:10:57 PM gr:\projects\bmu\stanly 57\drawings\B4644_sd_gd_01.dgn

PROJECT REFERENCE	SHEET NO.
B-4644	3

ROADWAY DESIGN ENGINEER

GIBSON ENGINEERS, PC
LICENSE C-2487

Prepared in the Office of: GIBSON ENGINEERS, PC

Note: Not to Scale

**S.U.E. = Subsurface Utility Engineering*

STATE OF NORTH CAROLINA
DIVISION OF HIGHWAYS

CONVENTIONAL PLAN SHEET SYMBOLS

BOUNDARIES AND PROPERTY:

- State Line
- County Line
- Township Line
- City Line
- Reservation Line
- Property Line
- Existing Iron Pin — CIP
- Property Corner
- Property Monument — CM
- Parcel/Sequence Number — 123
- Existing Fence Line
- Proposed Woven Wire Fence
- Proposed Chain Link Fence
- Proposed Barbed Wire Fence
- Existing Wetland Boundary — WLB
- Proposed Wetland Boundary — WLB
- Existing Endangered Animal Boundary — EAB
- Existing Endangered Plant Boundary — EPB

BUILDINGS AND OTHER CULTURE:

- Gas Pump Vent or U/G Tank Cap
- Sign — S
- Well — W
- Small Mine
- Foundation
- Area Outline
- Cemetery
- Building
- School
- Church
- Dam

HYDROLOGY:

- Stream or Body of Water
- Hydro, Pool or Reservoir
- Jurisdictional Stream — JS
- Buffer Zone 1 — BZ 1
- Buffer Zone 2 — BZ 2
- Flow Arrow
- Disappearing Stream
- Spring
- Wetland
- Proposed Lateral, Tail, Head Ditch — FLOW
- False Sump

RAILROADS:

- Standard Gauge — CSX TRANSPORTATION
- RR Signal Milepost — MILEPOST 35
- Switch — SWITCH
- RR Abandoned
- RR Dismantled

RIGHT OF WAY:

- Baseline Control Point
- Existing Right of Way Marker
- Existing Right of Way Line
- Proposed Right of Way Line
- Proposed Right of Way Line with Iron Pin and Cap Marker
- Proposed Right of Way Line with Concrete or Granite Marker
- Existing Control of Access — CA
- Proposed Control of Access — CA
- Existing Easement Line — E
- Proposed Temporary Construction Easement — E
- Proposed Temporary Drainage Easement — TDE
- Proposed Permanent Drainage Easement — PDE
- Proposed Permanent Utility Easement — PUE

ROADS AND RELATED FEATURES:

- Existing Edge of Pavement
- Existing Curb
- Proposed Slope Stakes Cut — C
- Proposed Slope Stakes Fill — F
- Proposed Wheel Chair Ramp — WCR
- Existing Metal Guardrail
- Proposed Guardrail
- Existing Cable Guiderail
- Proposed Cable Guiderail
- Equality Symbol
- Pavement Removal

VEGETATION:

- Single Tree
- Single Shrub
- Hedge
- Woods Line
- Orchard
- Vineyard — Vineyard

EXISTING STRUCTURES:

MAJOR:

- Bridge, Tunnel or Box Culvert — CONC
- Bridge Wing Wall, Head Wall and End Wall — CONC WW

MINOR:

- Head and End Wall — CONC HW
- Pipe Culvert
- Footbridge
- Drainage Box: Catch Basin, DI or JB — CB
- Paved Ditch Gutter
- Storm Sewer Manhole — S
- Storm Sewer — S

UTILITIES:

POWER:

- Existing Power Pole
- Proposed Power Pole
- Existing Joint Use Pole
- Proposed Joint Use Pole
- Power Manhole — P
- Power Line Tower
- Power Transformer
- U/G Power Cable Hand Hole — HH
- H-Frame Pole
- Recorded U/G Power Line — P
- Designated U/G Power Line (S.U.E.*) — P

TELEPHONE:

- Existing Telephone Pole
- Proposed Telephone Pole
- Telephone Manhole — T
- Telephone Booth
- Telephone Pedestal — T
- Telephone Cell Tower
- U/G Telephone Cable Hand Hole — HH
- Recorded U/G Telephone Cable — T
- Designated U/G Telephone Cable (S.U.E.*) — T
- Recorded U/G Telephone Conduit — TC
- Designated U/G Telephone Conduit (S.U.E.*) — TC
- Recorded U/G Fiber Optics Cable — T FO
- Designated U/G Fiber Optics Cable (S.U.E.*) — T FO

WATER:

- Water Manhole — W
- Water Meter
- Water Valve
- Water Hydrant
- Recorded U/G Water Line — W
- Designated U/G Water Line (S.U.E.*) — W
- Above Ground Water Line — A/G Water

TV:

- TV Satellite Dish
- TV Pedestal — C
- TV Tower
- U/G TV Cable Hand Hole — HH
- Recorded U/G TV Cable — TV
- Designated U/G TV Cable (S.U.E.*) — TV
- Recorded U/G Fiber Optic Cable — TV FO
- Designated U/G Fiber Optic Cable (S.U.E.*) — TV FO

GAS:

- Gas Valve
- Gas Meter
- Recorded U/G Gas Line — G
- Designated U/G Gas Line (S.U.E.*) — G
- Above Ground Gas Line — A/G Gas

SANITARY SEWER:

- Sanitary Sewer Manhole
- Sanitary Sewer Cleanout
- U/G Sanitary Sewer Line — SS
- Above Ground Sanitary Sewer — A/G Sanitary Sewer
- Recorded SS Forced Main Line — FSS
- Designated SS Forced Main Line (S.U.E.*) — FSS

MISCELLANEOUS:

- Utility Pole
- Utility Pole with Base
- Utility Located Object
- Utility Traffic Signal Box — S
- Utility Unknown U/G Line — ?UTL
- U/G Tank; Water, Gas, Oil
- A/G Tank; Water, Gas, Oil
- U/G Test Hole (S.U.E.*)
- Abandoned According to Utility Records — AATUR
- End of Information — E.O.I.

bphillips
proj\b4644_rdp_phlb.dgn
10/18/2018 3:32:30 PM

PROJECT REFERENCE	SHEET NO.
B-4644	4

ROADWAY DESIGN ENGINEER

GIBSON ENGINEERS, PC
LICENSE C-2487

Prepared in the Office of: GIBSON ENGINEERS, PC

GENERAL NOTES:

2006 SPECIFICATIONS
EFFECTIVE: 07-18-06
REVISED: 07-30-08

GRADE LINE:
GRADING AND SURFACING:

THE GRADE LINES SHOWN DENOTE THE FINISHED ELEVATION OF THE PROPOSED SURFACING AT GRADE POINTS SHOWN ON THE TYPICAL SECTIONS. GRADE LINES MAY BE ADJUSTED AT THEIR BEGINNING AND ENDING AND AT STRUCTURES AS DIRECTED BY THE ENGINEER IN ORDER TO SECURE A PROPER TIE-IN.

CLEARING:

CLEARING ON THIS PROJECT SHALL BE PERFORMED TO THE LIMITS ESTABLISHED BY METHOD II.

SAFETY CLEARING:

THE CONTRACTOR'S ATTENTION IS DIRECTED TO THE AREAS IN THE PLANS DESIGNATED SAFETY CLEARING. THE LIMITS ARE AS SHOWN AND THE CLEARING AND GRUBBING IS CONSIDERED A PART OF THE LUMP SUM ITEM FOR "CLEARING AND GRUBBING".

SUPERELEVATION:

ALL CURVES ON THIS PROJECT SHALL BE SUPERELEVATED IN ACCORDANCE WITH STD. NO. 225.04 USING THE RATE OF SUPERELEVATION AND RUNOFF SHOWN ON THE PLANS. SUPERELEVATION IS TO BE REVOLVED ABOUT THE GRADE POINTS SHOWN ON THE TYPICAL SECTIONS.

SHOULDER CONSTRUCTION:

ASPHALT, EARTH, AND CONCRETE SHOULDER CONSTRUCTION ON THE HIGH SIDE OF SUPERELEVATED CURVES SHALL BE IN ACCORDANCE WITH STD. NO. 560.01.

GUARDRAIL:

THE GUARDRAIL LOCATIONS SHOWN ON THE PLANS MAY BE ADJUSTED DURING CONSTRUCTION AS DIRECTED BY THE ENGINEER. THE CONTRACTOR SHOULD CONSULT WITH THE ENGINEER PRIOR TO ORDERING GUARDRAIL MATERIAL.

TEMPORARY SHORING:

SHORING REQUIRED FOR THE MAINTENANCE OF TRAFFIC WILL BE PAID FOR AS "EXTRA WORK" IN ACCORDANCE WITH SECTION 104-7.

SUBSURFACE PLANS:

NO SUBSURFACE PLANS ARE AVAILABLE ON THIS PROJECT. THE CONTRACTOR SHOULD MAKE HIS OWN INVESTIGATION AS TO THE SUBSURFACE CONDITIONS.

END BENTS:

THE ENGINEER SHALL CHECK THE STRUCTURE END BENT PLANS, DETAILS, AND CROSS-SECTION PRIOR TO SETTING OF THE SLOPE STAKES FOR THE EMBANKMENT OR EXCAVATION APPROACHING A BRIDGE.

UTILITIES:

ANY RELOCATION OF EXISTING UTILITIES WILL BE ACCOMPLISHED BY OTHERS.

APPROXIMATE GUARDRAIL LENGTH

STATION	LOCATION	STATION	LOCATION	LENGTH
-L- 11+17.94 +/-	RT	-L- 12+30.47 +/-	RT	112.5'
-L- 11+55.47 +/-	LT	-L- 12+30.47 +/-	LT	75'
-L- 13+27.72 +/-	RT	-L- 14+02.72 +/-	RT	75'
-L- 13+27.72 +/-	LT	-L- 14+40.22 +/-	LT	112.5'
		SUBTOTAL		375'
		ANCHOR DEDUCTIONS		275'
		TOTAL		100'
		SAY		112.5'

ANCHOR DEDUCTIONS		
GRAU-350	4 X 50'	200'
TYPE B-77	4 X 18.75'	75'
TOTAL ANCHOR DEDUCTIONS		275'

EFF. 07-18-06
REV. 01-02-07

2006 ROADWAY ENGLISH STANDARD DRAWINGS

The following Roadway Standards as appear in "Roadway Standard Drawings" Highway Design Branch - N. C. Department of Transportation - Raleigh, N. C., Dated July 18, 2006 are applicable to this project and by reference hereby are considered a part of these plans:

STD.NO.	TITLE
DIVISION 2 - EARTHWORK	
200.02	Method of Clearing - Method II
225.02	Guide for Grading Subgrade - Secondary and Local
225.04	Method of Obtaining Superelevation - Two Lane Pavement
DIVISION 4 - MAJOR STRUCTURES	
422.10	Reinforced Bridge Approach Fills
DIVISION 5 - SUBGRADE, BASES AND SHOULDERS	
560.01	Method of Shoulder Construction - High Side of Superelevated Curve - Method I
DIVISION 8 - INCIDENTALS	
840.29	Frames and Narrow Slot Flat Grates
840.35	Traffic Bearing Grated Drop Inlet - for Cast Iron Double Frame and Grates
840.46	Traffic Bearing Precast Drainage Structure
840.66	Drainage Structure Steps
846.01	Concrete Curb, Gutter and Curb & Gutter
846.04	Drop Inlet Installation in Shoulder Berm Gutter
862.01	Guardrail Placement
862.02	Guardrail Installation
862.03	Structure Anchor Units
862.04	Anchoring End of Guardrail - B-77 and B-83 Anchor Units

bphillips
r:\roadway\Proj\b4644_rdy_sheet 1a.dgn
10/18/2010 3:32:36 PM

PROJECT REFERENCE	SHEET NO.
B-4644	5

ROADWAY DESIGN ENGINEER

NORTH CAROLINA PROFESSIONAL SEAL 27361 ENGINEER

10/18/10

GIBSON ENGINEERS, PC
LICENSE C-2487

Prepared in the Office of: GIBSON ENGINEERS, PC

DESIGN DATA

ADT 2005 = 200
ADT 2025 = 300
V = 30 MPH
*DESIGN EXCEPTION: FOR
DESIGN SPEED
MAXIMUM GRADE
VERTICAL K FACTOR

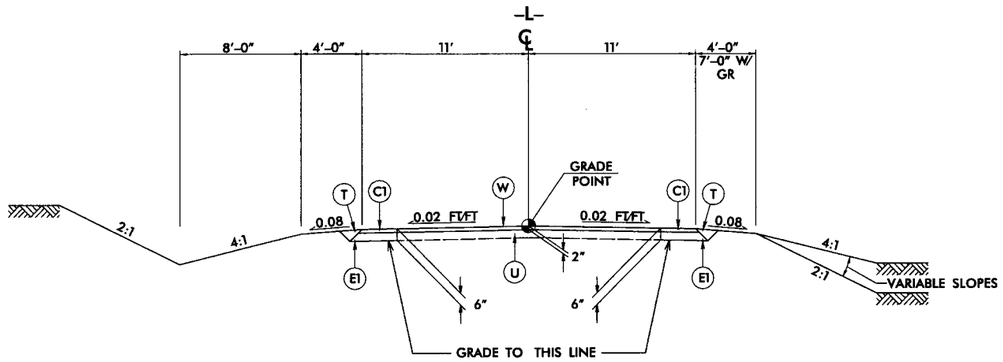

TYPICAL SECTION NO. 1

USE TYPICAL SECTION NO. 1:

-L- STA 10+50 TO 12+30.47
-L- STA 13+27.72 TO 15+50

NOTE: 1) FOR VARIABLE SLOPES SEE CROSS SECTIONS.
2) SEE PLANS FOR TAPERS.

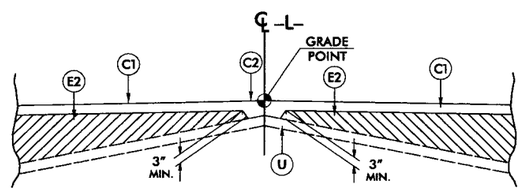

Detail Showing Method of Wedging

PAVEMENT SCHEDULE	
C1	PROP. APPROX. 2.0" ASPHALT CONCRETE SURFACE COURSE, TYPE SF9.5A, AT AN AVERAGE RATE OF 110 LBS. PER SQ. YD. IN EACH OF TWO LAYERS.
C2	PROP. VAR. DEPTH ASPHALT CONCRETE SURFACE COURSE, TYPE SF9.5A, AT AN AVERAGE RATE OF 110 LBS. PER SQ. YD. PER 1" DEPTH. TO BE PLACED IN LAYERS NOT TO EXCEED 1.5" IN DEPTH.
E1	PROP. APPROX. 4.0" ASPHALT CONCRETE BASE COURSE, TYPE B25.0B, AT AN AVERAGE RATE OF 456 LBS. PER SQ. YD.
E2	PROP. VAR. DEPTH ASPHALT CONCRETE BASE COURSE, TYPE B25.0B, AT AN AVERAGE RATE OF 114 LBS. PER SQ. YD. PER 1" DEPTH TO BE PLACED IN LAYERS NOT LESS THAN 3" IN DEPTH OR GREATER THAN 5½" IN DEPTH.
T	EARTH MATERIAL.
U	EXISTING PAVEMENT.
W	WEDGING (SEE DETAIL SHOWING METHOD OF WEDGING).

NOTE: PAVEMENT EDGE SLOPES ARE 1:1 UNLESS SHOWN OTHERWISE.

bphillips
rdwy\proj\B4644_rdy_typ.dgn
10/18/2010 3:32:41 PM

05-NOV-2009 11:35
s:\contracts\contracts\special details\erioward\stds\06' stds to special details\30001\0300d01.dgn
jhowerton AT PS237561

5/14/99

STATE OF NORTH CAROLINA
DEPT. OF TRANSPORTATION
DIVISION OF HIGHWAYS
RALEIGH, N.C.

7-06

ENGLISH DETAIL DRAWING FOR METHOD OF PIPE INSTALLATION

FLEXIBLE PIPE

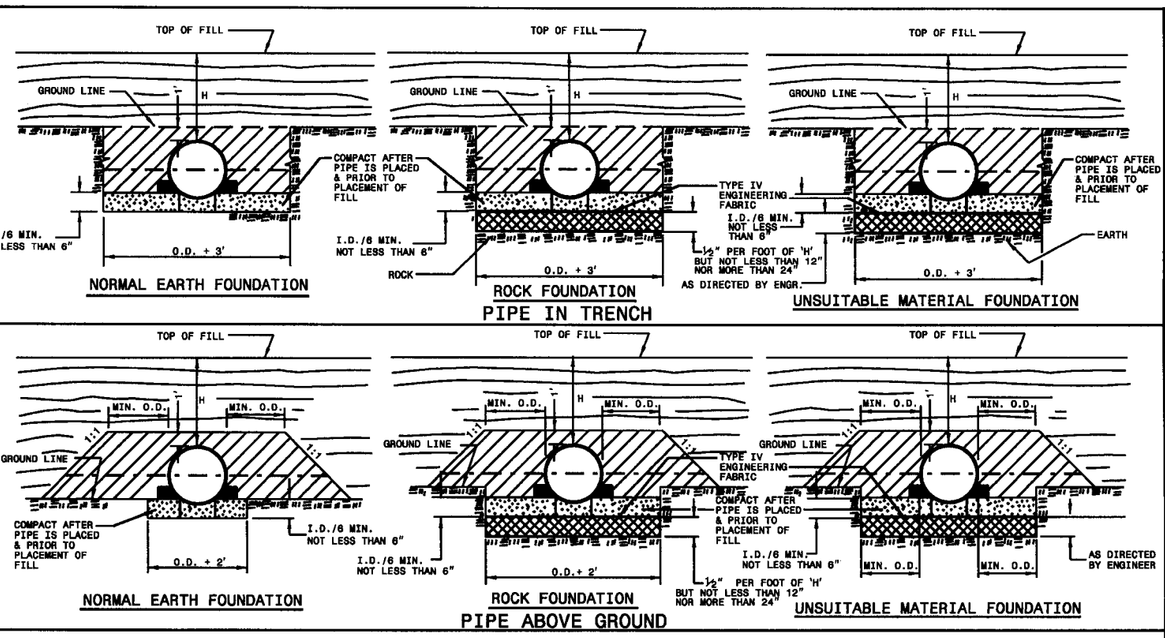

GENERAL NOTES:

I.D. = THE MAXIMUM HORIZONTAL INSIDE DIAMETER DIMENSION.

O.D. = THE MAXIMUM HORIZONTAL OUTSIDE DIAMETER DIMENSION.

H = THE FILL HEIGHT MEASURED VERTICALLY AT ANY POINT ALONG THE PIPE FROM THE TOP OF THE PIPE TO THE TOP OF THE EMBANKMENT AT THAT POINT.

TAKE CARE TO FULLY COMPACT HAUNCH ZONE OF PIPE BACKFILL.

LOOSELY PLACED SELECT MATERIAL CLASS III OR CLASS II, TYPE 1 FOR PIPE BEDDING. LEAVE SECTION DIRECTLY BENEATH PIPE UNCOMPACTED AS PIPE SEATING AND BACKFILL WILL ACCOMPLISH COMPACTION.

DO NOT OPERATE HEAVY EQUIPMENT OVER ANY PIPE CULVERT UNTIL THE PIPE CULVERT HAS BEEN PROPERLY BACKFILLED AND COVERED WITH AT LEAST 3 FEET OF APPROVED MATERIAL.

SPRINGLINE OF PIPE

SELECT BACKFILL MATERIAL CLASS III OR CLASS II, TYPE 1 ABOVE AND BELOW SPRINGLINE.

APPROVED SUITABLE LOCAL MATERIAL.

UNDISTURBED EARTH MATERIAL

SELECT MATERIAL CLASS V OR VI FOR FOUNDATION CONDITIONING. ENCAPSULATE WITH ENGINEERING FABRIC AS DIRECTED BY THE ENGINEER.

SHEET 1 OF 3

300D01

STATE OF NORTH CAROLINA
DEPT. OF TRANSPORTATION
DIVISION OF HIGHWAYS
RALEIGH, N.C.

7-06

ENGLISH DETAIL DRAWING FOR METHOD OF PIPE INSTALLATION

RIGID PIPE

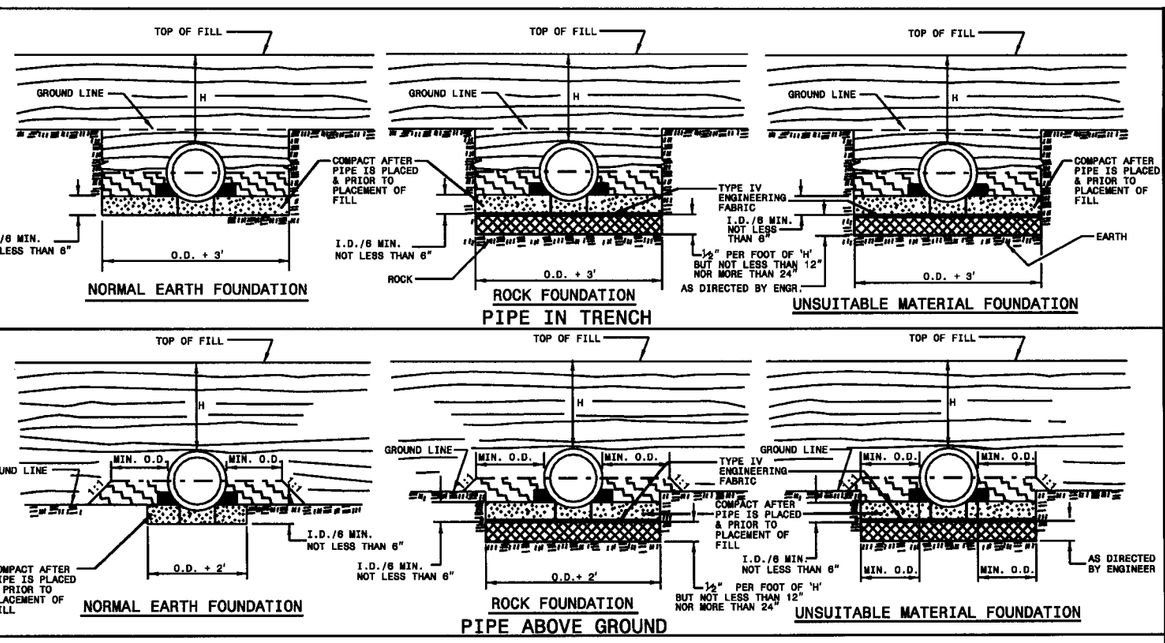

GENERAL NOTES:

I.D. = THE MAXIMUM HORIZONTAL INSIDE DIAMETER DIMENSION.

O.D. = THE MAXIMUM HORIZONTAL OUTSIDE DIAMETER DIMENSION.

H = THE FILL HEIGHT MEASURED VERTICALLY AT ANY POINT ALONG THE PIPE FROM THE TOP OF THE PIPE TO THE TOP OF THE EMBANKMENT AT THAT POINT.

TAKE CARE TO FULLY COMPACT HAUNCH ZONE OF PIPE BACKFILL.

LOOSELY PLACED SELECT MATERIAL CLASS III OR CLASS II, TYPE 1 FOR PIPE BEDDING. LEAVE SECTION DIRECTLY BENEATH PIPE UNCOMPACTED AS PIPE SEATING AND BACKFILL WILL ACCOMPLISH COMPACTION.

DO NOT OPERATE HEAVY EQUIPMENT OVER ANY PIPE CULVERT UNTIL THE PIPE CULVERT HAS BEEN PROPERLY BACKFILLED AND COVERED WITH AT LEAST 3 FEET OF APPROVED MATERIAL.

SPRINGLINE OF PIPE

SELECT BACKFILL MATERIAL CLASS III OR CLASS II, BELOW SPRINGLINE.

APPROVED SUITABLE LOCAL MATERIAL ABOVE SPRINGLINE.

UNDISTURBED EARTH MATERIAL

SELECT MATERIAL CLASS V OR VI FOR FOUNDATION CONDITIONING. ENCAPSULATE WITH ENGINEERING FABRIC AS DIRECTED BY THE ENGINEER.

SHEET 2 OF 3

300D01

PROJECT SERVICES UNIT
STANDARDS AND SPECIAL DESIGN
OFFICE 919-250-4128 FAX 919-250-4119

SEE PLATE FOR TITLE

ORIGINAL BY: KKempf DATE: 5-18-99
MODIFIED BY: DATE:
CHECKED BY: DATE:
FILE SPEC/Wp/kempf/k5001/k5001/k5001/k5001/0300d01.dgn

PROJECT REFERENCE NO. B-4444

SHEET NO. 8

STATE OF NORTH CAROLINA
DEPT. OF TRANSPORTATION
DIVISION OF HIGHWAYS
RALEIGH, N.C.

7-06

ENGLISH DETAIL DRAWING FOR
METHOD OF PIPE INSTALLATION
FILL HEIGHT TABLES

FLEXIBLE PIPE

Round Corrugated Steel Pipe
2 2/3 x ½ corrugation **

Diameter (inches)	Minimum cover (inches)	Maximum Height of Cover (feet) (Ga) 16	14	12	10	8
12	12	204	256			
15	12	162	204			
18	12	135	169	239		
21	12	115	145	204		
24	12	100	126	178		
30	12	79	100	142		
36	12	65	83	117	152	
42	12	55	70	100	130	160
48	12	48	61	87	113	139
54	12		54	77	100	123
60	12			69	90	111
66	12				81	100
72	12				74	91
78	12					81
84	12					69

Round Corrugated Aluminum Pipe
2 2/3 x ½ corrugation **

Diameter (inches)	Minimum cover (inches)	Maximum Height of Cover (feet) (Ga) 16	14	12	10	8
12	12	123	155	218	281	344
15	12	98	123	174	224	275
18	12	81	102	144	187	228
21	12	69	87	123	160	195
24	12	60	76	108	139	171
27	12		67	95	123	151
30	12		60	85	111	136
36	12		50	71	92	113
42	12			60	78	96
48	12			52	68	84
54	12			46	50	74
60	12				50	62
66	12					51
72	12					41

** FOR DIFFERENT CORRUGATIONS AND ARCH PIPES REFER TO ROADWAY DESIGN MANUAL OR MANUFACTURERS SPECIFICATION.

HDPE - * (Minimum fill) 2' for pipe diameters ≥ 12" and ≤ 60"
* (Maximum fill) 20' for pipe diameters ≤ 24"
17' for pipe diameters ≥ 30" and ≤ 60"

PVC - * (Minimum fill) 2' for pipe diameters ≥ 12" and ≤ 36"
* (Maximum fill) 30' for pipe diameters ≥ 12" and ≤ 36"

* FILL HEIGHT IS MEASURED FROM THE TOP OF THE PIPE TO THE BOTTOM OF THE PAVEMENT STRUCTURE

REFER TO THE FOLLOWING FOR PIPE SPECIFICATIONS

CSP - AASHTO M36
CAAP - AASHTO M196
HDPE - AASHTO M294
PVC - ASTM F949 or AASHTO M304

NOTES: FILL HEIGHTS SHOWN WERE CALCULATED USING AASHTO LRFD BRIDGE DESIGN SPECIFICATIONS

1' MINIMUM COVER FOR ALL SIDE DRAIN PIPE IN ACCORDANCE WITH THE STANDARD SPECIFICATIONS

RIGID PIPE

RCP - * (Minimum fill) 1' for Class IV & CLASS V
2' for Class III & Class II

* (Maximum fill) 10' - Class II pipe
20' - Class III pipe
30' - Class IV pipe
40' - Class V pipe

(For fills > 40' & < 80' use LRFD Direct Design Method)

* FILL HEIGHT IS MEASURED FROM THE TOP OF THE PIPE TO THE BOTTOM OF THE PAVEMENT STRUCTURE

REFER TO THE FOLLOWING FOR PIPE SPECIFICATIONS

RCP - AASHTO M170

NOTES: FILL HEIGHTS SHOWN WERE CALCULATED USING AASHTO LRFD BRIDGE DESIGN SPECIFICATIONS

1' MINIMUM COVER FOR ALL SIDE DRAIN PIPE IN ACCORDANCE WITH THE STANDARD SPECIFICATIONS

SHEET 3 OF 3
300D01

STATE OF NORTH CAROLINA
DEPT. OF TRANSPORTATION
DIVISION OF HIGHWAYS
RALEIGH, N.C.

7-06

ENGLISH DETAIL DRAWING FOR
METHOD OF PIPE INSTALLATION
FILL HEIGHT TABLES

SHEET 3 OF 3
300D01

PROJECT SERVICES UNIT
STANDARDS AND SPECIAL DESIGN
OFFICE 919-250-4128 FAX 919-250-4119

SEE PLATE FOR TITLE

ORIGINAL BY: KKempf DATE: 5-15-99
MODIFIED BY: DATE:
CHECKED BY: DATE:
FILE SPEC: s:\contracts\contracts\special details\erioward\stds\30001\300d01.dgn

PROJECT REFERENCE NO. B-4044
SHEET NO. 7

PROJECT REFERENCE NO.	SHEET NO.
B-4644	8

STATE OF
NORTH CAROLINA
DEPT. OF TRANSPORTATION
DIVISION OF HIGHWAYS
RALEIGH, N.C.

ENGLISH DETAIL DRAWING FOR
ANCHORAGE FOR FRAMES
BRICK/CONCRETE/PRECAST CONCRETE

SHEET 1 OF 1
840D25

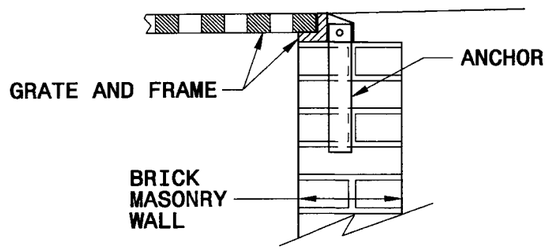

BRICK MASONRY CONSTRUCTION

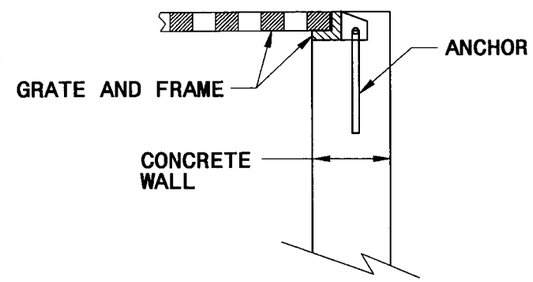

CONCRETE CONSTRUCTION

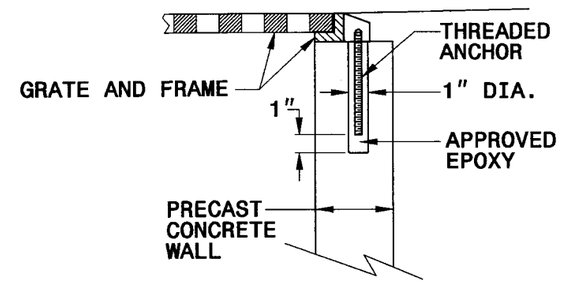

PRECAST CONCRETE CONSTRUCTION

DETAIL SHOWING ANCHORAGE OF FRAME FOR GRATED DROP INLET

NOTE:
CONSTRUCT GRATED DROP INLET TO COINCIDE WITH NORMAL OR SUPERELEVATED SHOULDER OR PAVEMENT SLOPE.

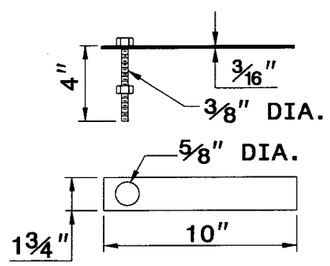

MASONRY ANCHOR
3/8" DIA. BOLT WITH PLATE

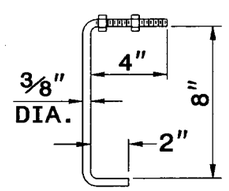

CONCRETE ANCHOR
3/8" DIA. BENT BAR

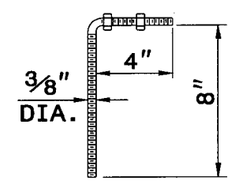

PRECAST CONCRETE ANCHOR
3/8" DIA. BENT BAR

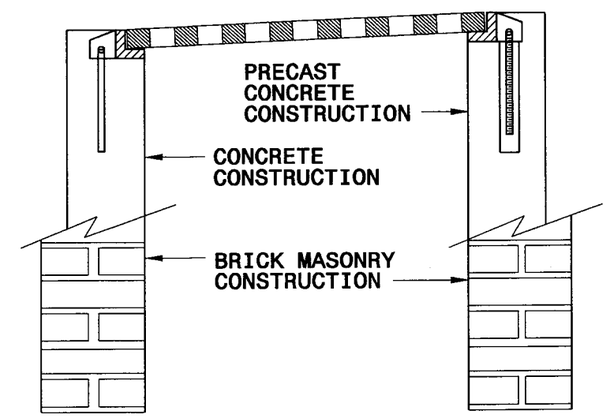

FRAME AND GRATE INSTALLATION FOR NORMAL CROWN AND SUPERELEVATED SECTIONS

STATE OF
NORTH CAROLINA
DEPT. OF TRANSPORTATION
DIVISION OF HIGHWAYS
RALEIGH, N.C.

ENGLISH DETAIL DRAWING FOR
ANCHORAGE FOR FRAMES
BRICK/CONCRETE/PRECAST CONCRETE

SHEET 1 OF 1
840D25

PROJECT SERVICES UNIT
STANDARDS AND SPECIAL DESIGN
Office 919-250-4128 FAX 919-250-4119

SEE PLATE FOR TITLE

ORIGINAL BY: 2006 STD 840.25 DATE: 07/18/06
MODIFIED BY: E.E. WARD DATE: 9/25/06
CHECKED BY: DATE:
FILE SPEC.:

27-SEP-2006 08:59
S:\Contracts\Contracts\Special Details\erioward\stds\V8'Stds to Special Details\84025 Anchorage for Frames\0840d25.dgn
erioward AT PS222293

PROJECT REFERENCE	SHEET NO.
B-4644	9
ROADWAY DESIGN ENGINEER	HYDRAULICS ENGINEER

GIBSON ENGINEERS, PC
LICENSE C-2487

Prepared in the Office of: GIBSON ENGINEERS, PC

VERTICAL SCALE 5' 0 5' 10'
HORIZONTAL SCALE 25' 0 25' 50'

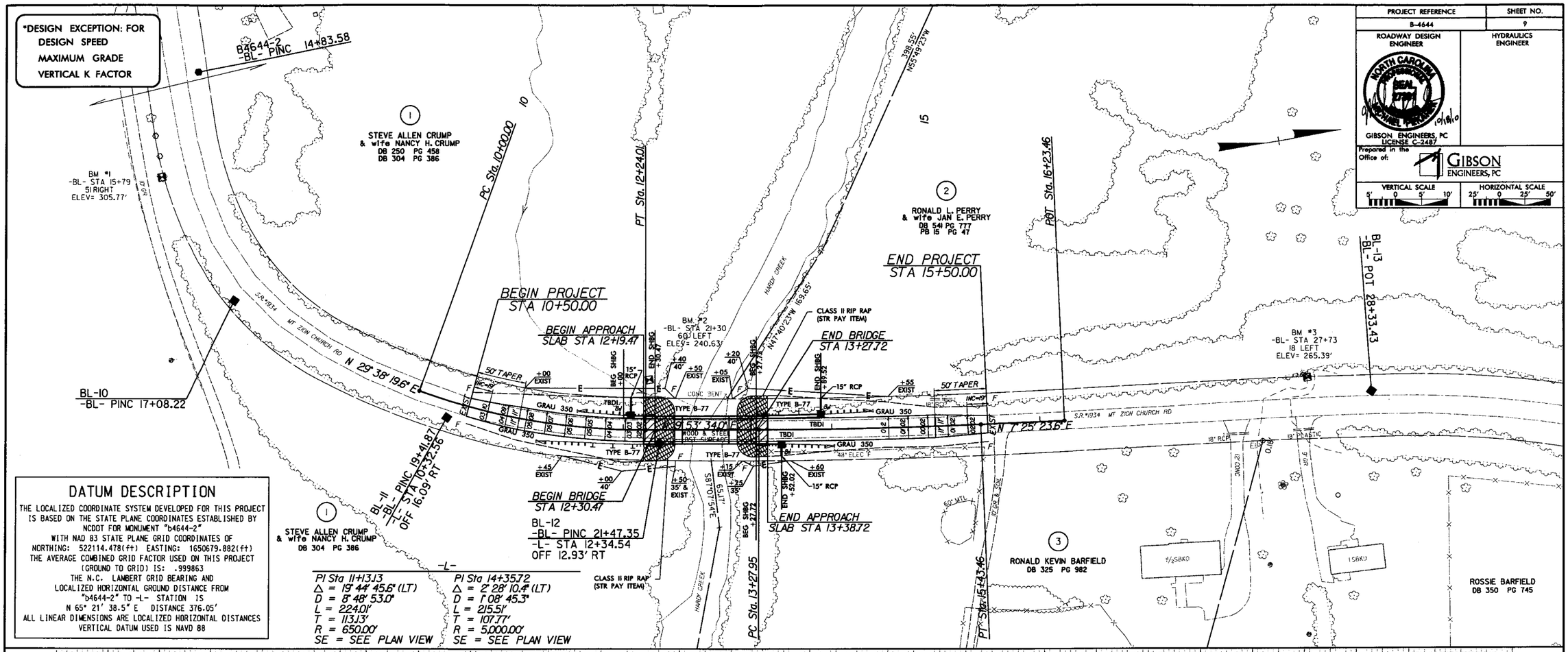

DATUM DESCRIPTION

THE LOCALIZED COORDINATE SYSTEM DEVELOPED FOR THIS PROJECT IS BASED ON THE STATE PLANE COORDINATES ESTABLISHED BY NCDOT FOR MONUMENT "b4644-2"
WITH NAD 83 STATE PLANE GRID COORDINATES OF
NORTHING: 522114.478(ft) EASTING: 1650679.882(ft)
THE AVERAGE COMBINED GRID FACTOR USED ON THIS PROJECT (GROUND TO GRID) IS: .999863
THE N.C. LAMBERT GRID BEARING AND LOCALIZED HORIZONTAL GROUND DISTANCE FROM "b4644-2" TO -L- STATION IS
N 65° 21' 38.5" E DISTANCE 376.05'
ALL LINEAR DIMENSIONS ARE LOCALIZED HORIZONTAL DISTANCES
VERTICAL DATUM USED IS NAVD 88

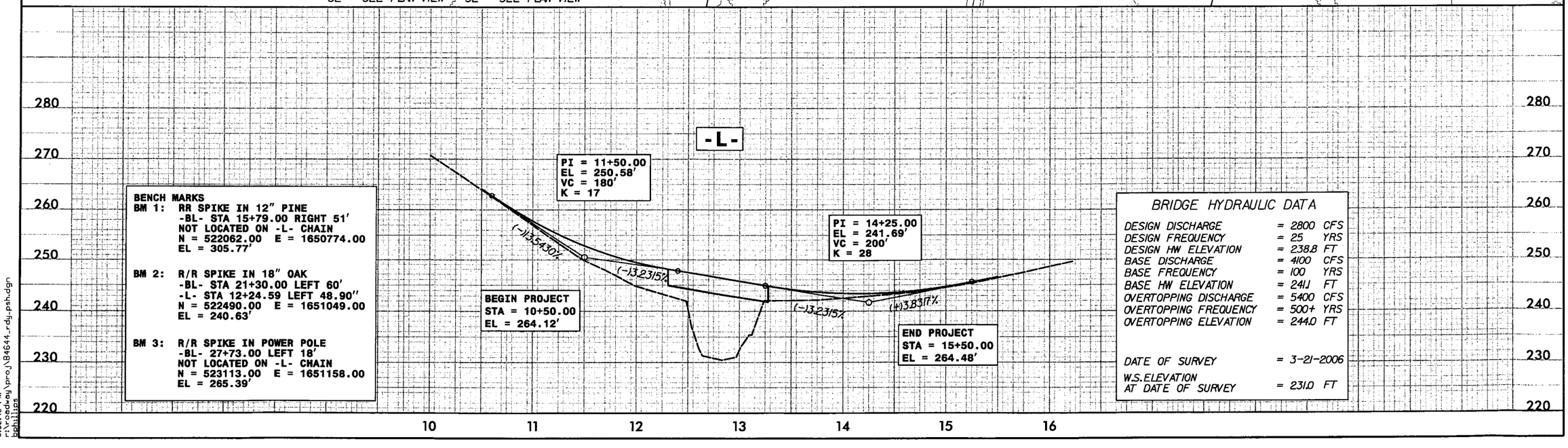

BENCH MARKS

BM 1: RR SPIKE IN 12" PINE
-BL- STA 15+79.00 RIGHT 51'
NOT LOCATED ON -L- CHAIN
N = 522062.00 E = 1650774.00
EL = 305.77'

BM 2: R/R SPIKE IN 18" OAK
-BL- STA 21+30.00 LEFT 60'
-L- STA 12+24.59 LEFT 48.90"
N = 522490.00 E = 1651049.00
EL = 240.63'

BM 3: R/R SPIKE IN POWER POLE
-BL- 27+73.00 LEFT 18'
NOT LOCATED ON -L- CHAIN
N = 523113.00 E = 1651158.00
EL = 265.39'

BRIDGE HYDRAULIC DATA

DESIGN DISCHARGE	= 2800	CFS
DESIGN FREQUENCY	= 25	YRS
DESIGN HW ELEVATION	= 238.8	FT
BASE DISCHARGE	= 4100	CFS
BASE FREQUENCY	= 100	YRS
BASE HW ELEVATION	= 241.1	FT
OVERTOPPING DISCHARGE	= 5400	CFS
OVERTOPPING FREQUENCY	= 500+	YRS
OVERTOPPING ELEVATION	= 244.0	FT
DATE OF SURVEY	= 3-21-2006	
W.S. ELEVATION AT DATE OF SURVEY	= 231.0	FT

10/18/2010
3:32:48 PM
r:\roadway\proj\B4644_rdy_psh.dgn
bphillips

PROJ. REFERENCE NO.	SHEET NO.
B-4644	10
STANLEY #57	

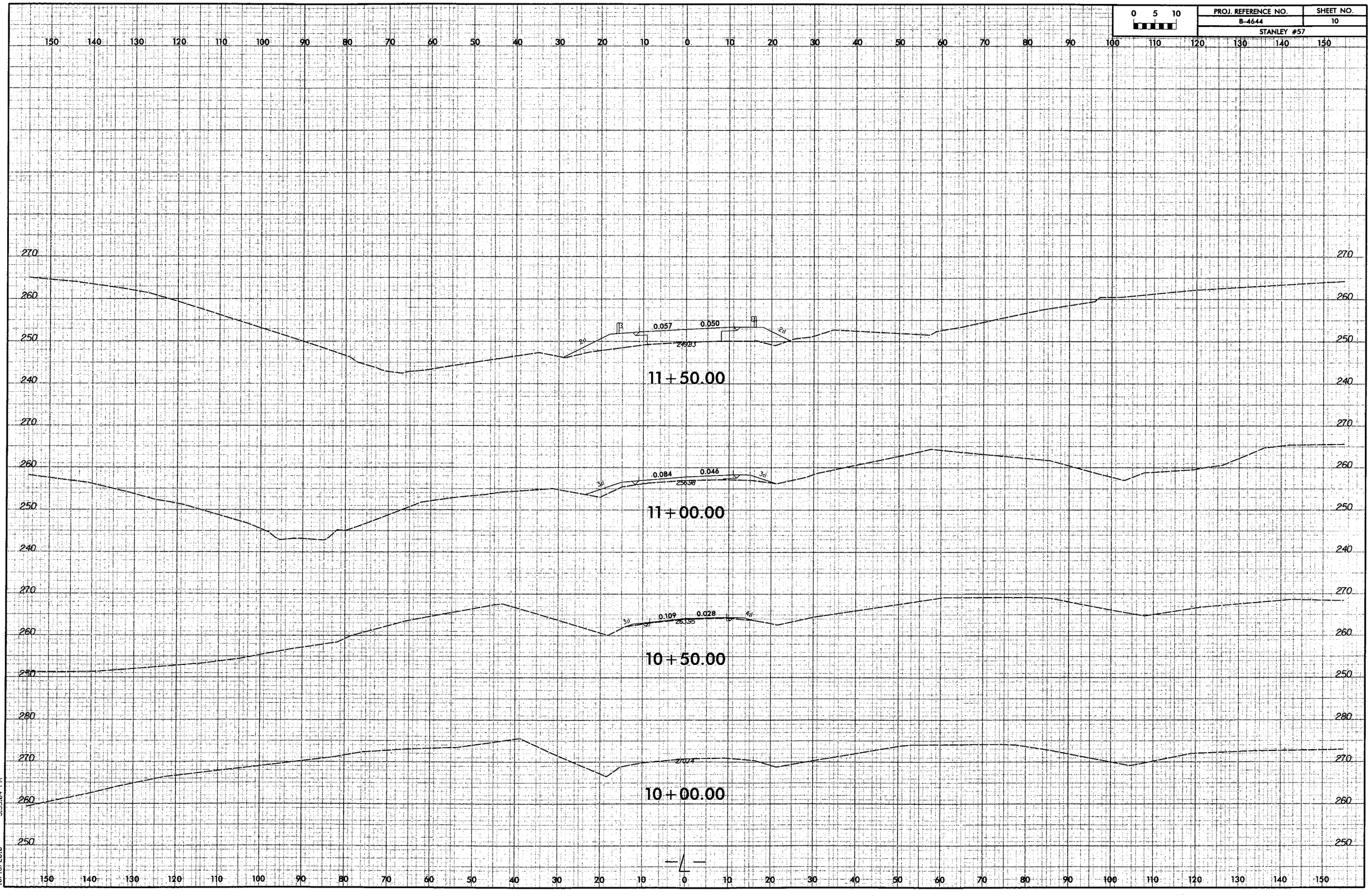

bphillips
r:\Roadway\Xsc\Xpl\B4644_rdy_xpl_L.dgn
10/18/2010 3:33:04 PM

PROJ. REFERENCE NO.	SHEET NO.
B-4644	11
STANLEY #57	

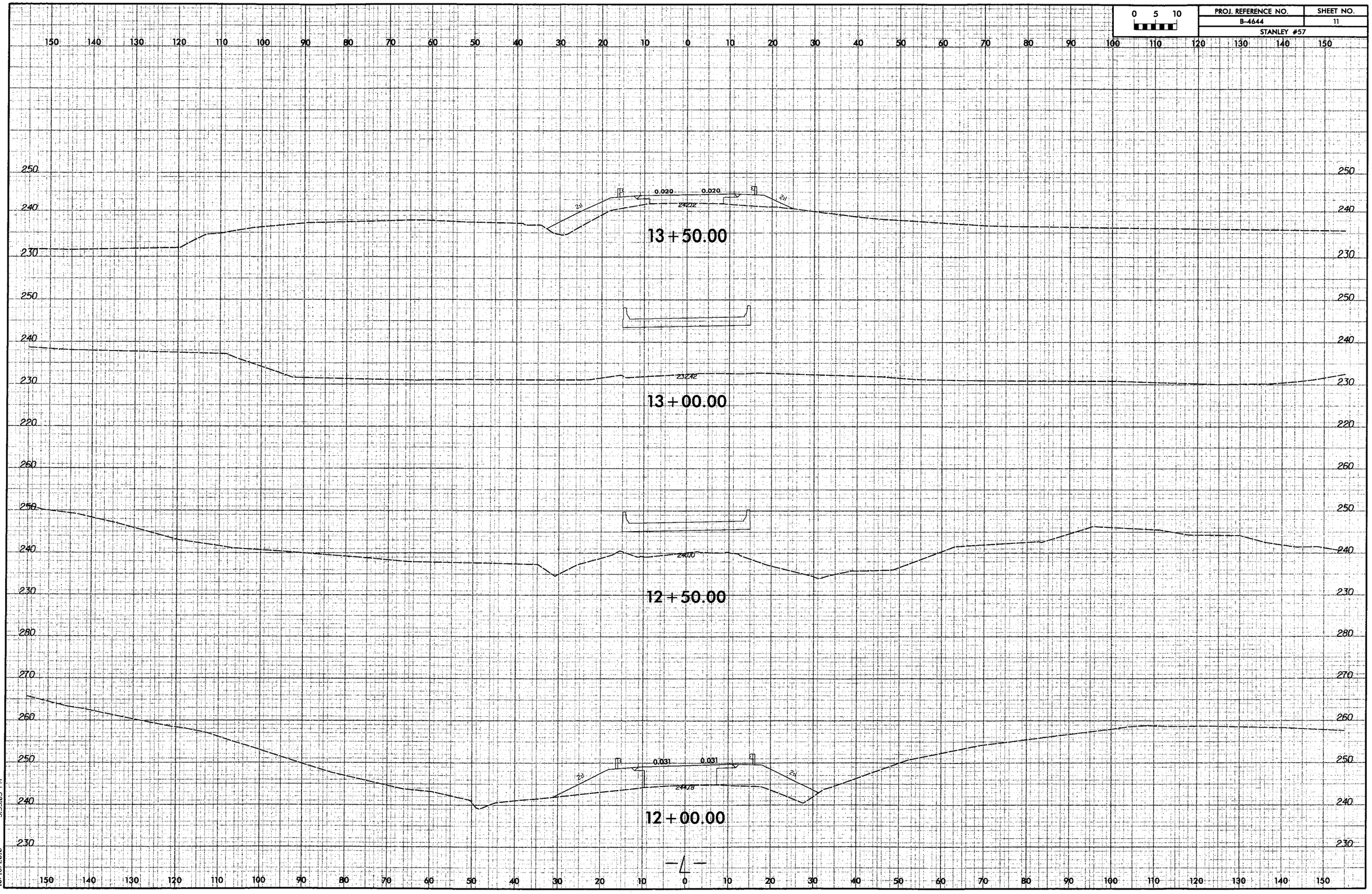

bphillips
r:\Roadway\Xsc\Xpl\B4644_rdy_xpl_L.dgn
10/18/2010 3:33:05 PM

PROJ. REFERENCE NO.	SHEET NO.
B-4644	12
STANLEY #57	

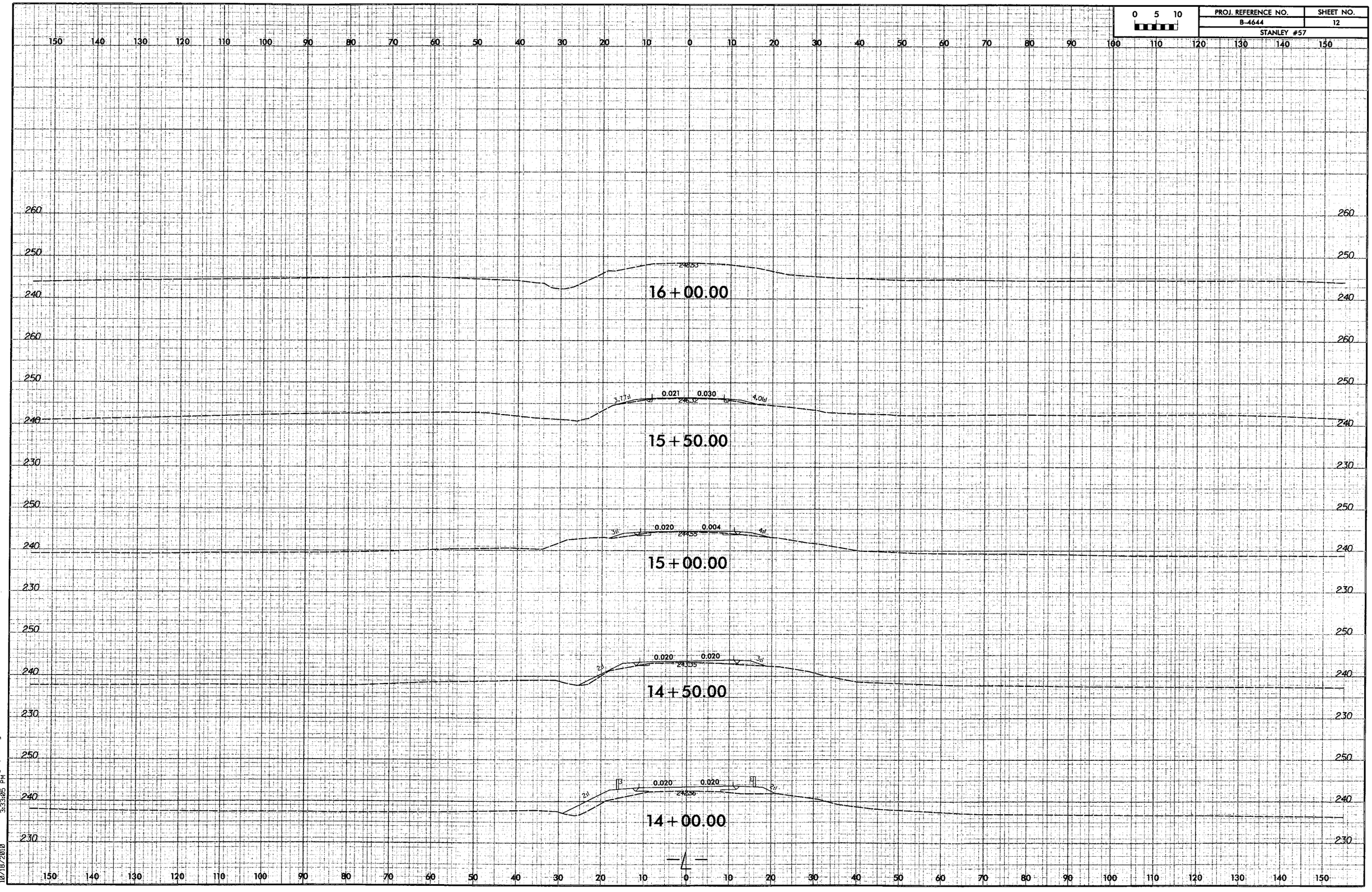

bphillips
B-4644_rdy_xpl_L.dgn
10/18/2018 3:33:05 PM

TOTAL BILL OF MATERIAL

	REMOVAL OF EXISTING STRUCTURE	UNCLASSFIED STRUCTURE EXCAVATION	CLASS A CONCRETE	BRIDGE APPROACH SLABS	REINFORCING STEEL	SPIRAL COLUMN REINFORCING STEEL	HP 12 X 53 STEEL PILES		PRECAST CONCRETE BARRIER RAIL	RIP RAP CLASS II (2'-0" THICK)	FILTER FABRIC FOR DRAINAGE	ELAST. BEARINGS	3'-0" X 1'-9" PRESTRESSED CONCRETE CORED SLABS	
	LUMP SUM	LUMP SUM	CU. YDS	LUMP SUM	LBS.	LBS.	NO.	LIN. FT.	LIN. FT.	TONS	SQ. YDS.	LUMP SUM	NO.	LIN. FT.
SUPERSTRUCTURE	LUMP SUM			LUMP SUM					190.0			LUMP SUM	30	950
END BENT 1			12.4		1,865		5	50		165	145			
BENT 1			41.5		8,216	707								
BENT 2			40.7		8,021	645								
END BENT 2			11.6		1,827		5	50		150	135			
TOTAL	LUMP SUM	LUMP SUM	106.2	LUMP SUM	19,929	1,352	10	100	190.0	315	280	LUMP SUM	30	950

4/28/2011 3:10:59 PM g:\projects\bmu\Stanly 57\Drawings\B4644_sd_bom.dgn

DRAWN BY : D.G. VESTER DATE : 2/11
CHECKED BY : M.A. AVERETTE DATE : 2/11

NORTH CAROLINA PROFESSIONAL SEAL 023908 ENGINEER MARK A. AVERETTE 4-28-11

PLANS PREPARED BY:

SIMPSON ENGINEERS & ASSOCIATES
5520 Dillard Drive
Suite 120
Cary, NC 27518
(919) 852-0468
(919) 852-0598 (Fax)
www.simpsonengr.com
LICENSURE NO. C-2521

WBS NO. 33811.3.1
STANLY COUNTY
STATION: 12+79.09 -L-
REPLACES BRIDGE NO. 57

STATE OF NORTH CAROLINA
DEPARTMENT OF TRANSPORTATION
RALEIGH

BILL OF MATERIAL

27' CLEAR ROADWAY - 90° SKEW

REVISIONS						SHEET NO.
NO.	BY:	DATE:	NO.	BY:	DATE:	13
1			3			TOTAL SHEETS
2			4			31

LOAD AND RESISTANCE FACTOR RATING (LRFR) SUMMARY FOR PRESTRESSED CONCRETE GIRDERS

LEVEL		VEHICLE	WEIGHT (W) (TONS)	CONTROLLING LOAD RATING (#)	MINIMUM RATING FACTORS (RF)	TONS = W × RF	STRENGTH I LIMIT STATE											SERVICE III LIMIT STATE						COMMENT NUMBER
								MOMENT					SHEAR						MOMENT					
							LIVE-LOAD FACTORS (γ_{LL})	DISTRIBUTION FACTORS (DF)	RATING FACTOR	SPAN	GIRDER LOCATION	DISTANCE FROM LEFT END OF SPAN (ft)	DISTRIBUTION FACTORS (DF)	RATING FACTOR	SPAN	GIRDER LOCATION	DISTANCE FROM LEFT END OF SPAN (ft)	LIVE-LOAD FACTORS (γ_{LL})	DISTRIBUTION FACTORS (DF)	RATING FACTOR	SPAN	GIRDER LOCATION	DISTANCE FROM LEFT END OF SPAN (ft)	
DESIGN LOAD RATING		HL-93 (INVENTORY)	N/A	1	1.31	--	1.75	0.297	1.31	B	EL	22.5	0.6	1.54	B	I	2.2	0.80	0.297	1.60	B	EL	22.5	1
		HL-93 (OPERATING)	N/A		1.70	--	1.35	0.297	1.70	B	EL	22.5	0.6	2.00	B	I	2.2	N/A	- -	- -	- -	- -	- -	1
		HS-20 (INVENTORY)	36.000	2	1.61	58.0	1.75	0.297	1.61	B	EL	22.5	0.6	1.95	B	I	2.3	0.80	0.297	1.96	B	EL	22.5	1
		HS-20 (OPERATING)	36.000		2.09	75.2	1.35	0.297	2.09	B	EL	22.5	0.6	2.52	B	I	2.3	N/A	- -	- -	- -	- -	- -	1
LEGAL LOAD RATING	SINGLE VEHICLE (SV)	SNSH	13.500		3.83	51.7	1.40	0.297	3.94	B	EL	22.5	0.6	6.28	B	I	3	0.80	0.297	3.83	B	EL	22.5	1
		SNGARBS2	20.000		3.10	62.0	1.40	0.297	3.18	B	EL	22.5	0.6	4.53	B	I	2.4	0.80	0.297	3.10	B	EL	22.5	1
		SNAGRIS2	22.000		3.04	66.9	1.40	0.297	3.10	B	EL	18	0.6	4.25	B	I	2.4	0.80	0.297	3.04	B	EL	18	1
		SNCOTTS3	27.250		1.91	52.0	1.40	0.297	1.97	B	EL	22.5	0.6	2.18	A	I	2.5	0.80	0.297	1.91	B	EL	22.5	1
		SNAGGRS4	34.925		1.69	59.0	1.40	0.297	1.74	B	EL	22.5	0.6	2.10	A	I	2.5	0.80	0.297	1.69	B	EL	22.5	1
		SNS5A	35.550		1.65	58.7	1.40	0.297	1.69	B	EL	22.5	0.6	2.18	A	I	2.5	0.80	0.297	1.65	B	EL	22.5	1
		SNS6A	39.950		1.55	61.9	1.40	0.297	1.59	B	EL	22.5	0.6	2.13	A	I	2.5	0.80	0.297	1.55	B	EL	22.5	1
		SNS7B	42.000	3	1.48	62.2	1.40	0.297	1.52	B	EL	22.5	0.6	2.14	A	I	2.5	0.80	0.297	1.48	B	EL	22.5	1
	TRUCK TRACTOR SEMI-TRAILER (TTST)	TNAGRIT3	33.000		1.90	62.7	1.40	0.297	1.95	B	EL	22.5	0.6	2.68	B	I	2.3	0.80	0.297	1.90	B	EL	22.5	1
		TNT4A	33.075		1.92	63.5	1.40	0.297	1.98	B	EL	22.5	0.6	2.37	A	I	2.5	0.80	0.297	1.92	B	EL	22.5	1
		TNT6A	41.600		1.61	67.0	1.40	0.297	1.66	B	EL	22.5	0.6	2.19	A	I	2.5	0.80	0.297	1.61	B	EL	22.5	1
		TNT7A	42.000		1.64	68.9	1.40	0.297	1.69	B	EL	22.5	0.6	2.19	B	I	2.3	0.80	0.297	1.64	B	EL	22.5	1
		TNT7B	42.000		1.71	71.8	1.40	0.297	1.76	B	EL	22.5	0.6	2.06	B	I	2.2	0.80	0.297	1.71	B	EL	22.5	1
		TNAGRIT4	43.000		1.63	70.1	1.40	0.297	1.68	B	EL	22.5	0.6	1.95	B	I	2.2	0.80	0.297	1.63	B	EL	22.5	1
		TNAGT5A	45.000		1.52	68.4	1.40	0.297	1.56	B	EL	22.5	0.6	2.01	B	I	2.2	0.80	0.297	1.52	B	EL	22.5	1
		TNAGT5B	45.000	3	1.48	66.6	1.40	0.297	1.52	B	EL	22.5	0.6	1.81	B	I	2.2	0.80	0.297	1.48	B	EL	22.5	1

LOAD FACTORS:

DESIGN LOAD RATING FACTORS	LIMIT STATE	γ_{DC}	γ_{DW}
	STRENGTH I	1.25	1.50
	SERVICE III	1.00	1.00

	YEAR	ADT
CURRENT	2005	200
FUTURE	2025	300

NOTES:

MINIMUM RATING FACTORS ARE BASED ON THE STRENGTH I AND SERVICE III LIMIT STATES.

ALLOWABLE STRESSES FOR SERVICE III LIMIT STATE ARE AS REQUIRED FOR DESIGN.

COMMENTS:

1. LEFT AND RIGHT EXTERIOR SLABS HAVE THE SAME RATING.

(#) CONTROLLING LOAD RATING

(1) DESIGN LOAD RATING (HL-93)

(2) DESIGN LOAD RATING (HS-20)

(3) LEGAL LOAD RATING **

** SEE CHART FOR VEHICLE TYPE

GIRDER LOCATION

I - INTERIOR GIRDER
EL - EXTERIOR LEFT GIRDER
ER - EXTERIOR RIGHT GIRDER

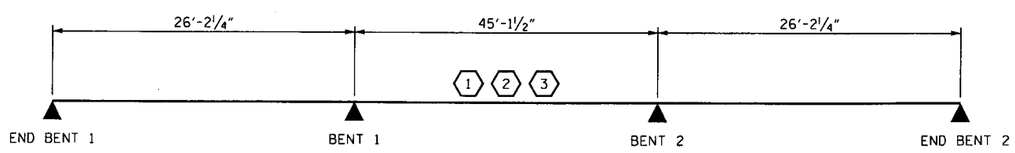

LRFR SUMMARY

WBS NO. 33811.3.1

STANLY COUNTY

STATION: 12+79.09 -L-

REPLACES BRIDGE NO. 57

NORTH CAROLINA PROFESSIONAL SEAL 023908 ENGINEER MARK A. AVERETTE 4-28-11

PLANS PREPARED BY:

SIMPSON ENGINEERS & ASSOCIATES

5520 Dillard Drive
Suite 120
Cary, NC 27518
(919) 852-0468
(919) 852-0598 (Fax)
www.simpsonengr.com

LICENSURE NO. C-2521

STATE OF NORTH CAROLINA
DEPARTMENT OF TRANSPORTATION
RALEIGH

LRFR SUMMARY FOR PRESTRESSED CORED SLABS

(NON-INTERSTATE TRAFFIC)
27' CLEAR ROADWAY - 90° SKEW

REVISIONS						SHEET NO.
NO.	BY:	DATE:	NO.	BY:	DATE:	14
1			3			TOTAL SHEETS
2			4			31

DRAWN BY : B. BUSH DATE : 2/11
CHECKED BY : M.A. AVERETTE DATE : 2/11

4/28/2011 3:11:02 PM g:\projects\bmu\stanly 57\drawings\B4644_sd_lrfr_01.dgn

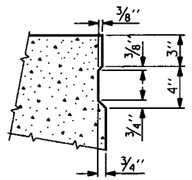

SHEAR KEY DETAIL

NOTE: OMIT SHEAR KEY ON OUTSIDE OF EXTERIOR CORED SLAB

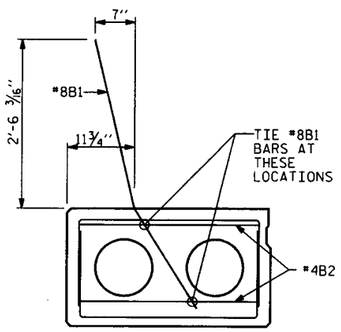

TIE LOCATION FOR #8B1

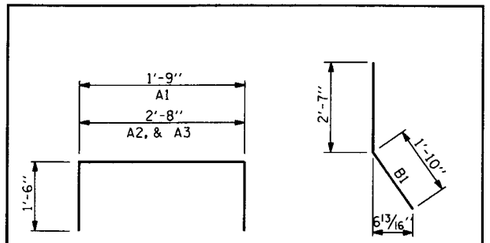

REINFORCING BAR TYPES

BAR DIMENSIONS ARE OUT TO OUT

SHEATH CHART		
SPAN LENGTH	NUMBER OF SHEATHED STRANDS PER EXTERIOR SLAB SECTIONS	NUMBER OF SHEATHED STRANDS PER INTERIOR SLAB SECTIONS
25'	0	0
45'	6	6

BOND SHALL BE BROKEN ON THESE STRANDS FOR A DISTANCE OF 4'-0" FROM END OF SLAB

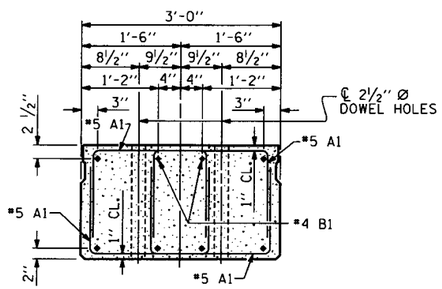

END ELEVATION

SHOWING PLACEMENT OF DOUBLE STIRRUPS AND LOCATION OF DOWEL HOLES. (STRAND LAYOUT NOT SHOWN.) INTERIOR SLAB SECTION SHOWN-EXTERIOR SLAB SECTION SIMILAR EXCEPT SHEAR KEY LOCATION. THE 2 1/2" Ø DOWEL HOLES OF SLAB SECTIONS SHALL BE FILED WITH GROUT. SEE SPECIAL PROVISIONS.

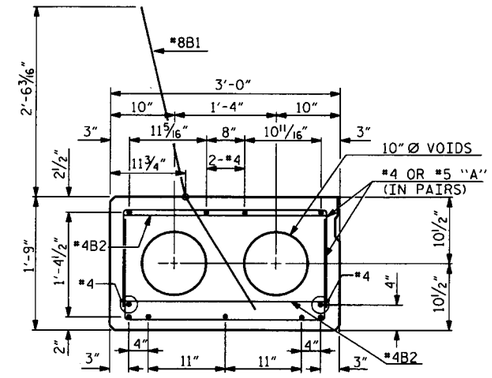

25' SPAN

7 - 0.6" Ø H.S. STRANDS
EXTERIOR SLAB SECTIONS

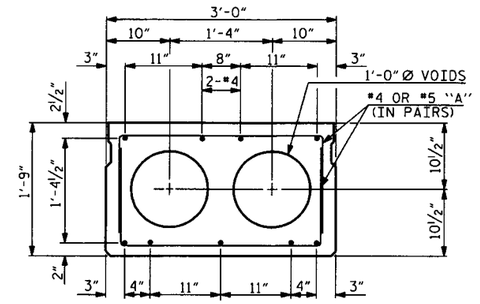

25' SPAN

7 - 0.6" Ø H.S. STRANDS
INTERIOR SLAB SECTIONS

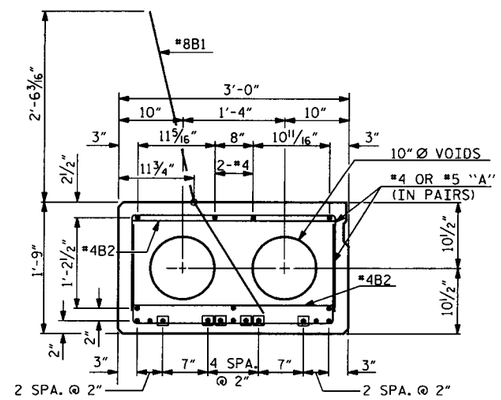

45' SPAN

14 - 0.6" Ø H.S. STRANDS
EXTERIOR SLAB SECTIONS

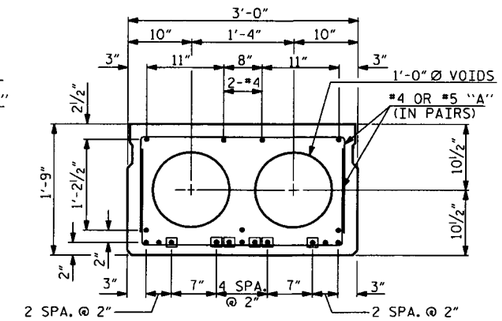

45' SPAN

14 - 0.6" Ø H.S. STRANDS
INTERIOR SLAB SECTIONS

▣ DENOTES SHEATHED STRAND (SEE SHEATH CHART)

GENERAL NOTES

ASSUMED LIVE LOAD = HL 93 OR ALTERNATE LOADING.

CONCRETE = f'c - 5000psi 25' SPAN ONLY (MIN. COMP. STRENGTH @ 28 DAYS).
f'ci - 4000psi 25' SPAN ONLY (MIN. COMP. STRENGTH @ TRANSFER OF STRESSING FORCE).

CONCRETE = f'c - 5000psi 45' SPAN ONLY (MIN. COMP. STRENGTH @ 28 DAYS).
f'ci - 4000psi 45' SPAN ONLY (MIN. COMP. STRENGTH @ TRANSFER OF STRESSING FORCE).

ALL PRESTRESSING STRANDS SHALL MEET THE REQUIREMENTS OF ASTM A416.

ALL PRESTRESSING STRANDS SHALL BE 7-WIRE LOW RELAXATION GRADE HIGH STRENGTH CABLES IN ACCORDANCE WITH THE STANDARD SPECIFICATIONS.

SIZE	TYPE	AREA	ULTIMATE STR.	APPLIED FORCE
0.6" Ø	HIGH STR.	0.217 SQ. IN. PER CABLE	58,600 LBS.	43,950 LBS. PER CABLE

EXP. JT. MAT'L. SHALL MEET THE REQUIREMENTS OF AASHTO SPECIFICATION M153 TYPE I, II, OR III.

JOINT SEALER SHALL BE LOW MODULUS SILICONE SEALANT. SEE SECTION 1028-4 OF THE STANDARD SPECIFICATIONS.

STRUCTURAL STEEL ITEMS SHALL BE OF A GRADE CONFORMING TO EITHER ASTM A36 OR A373, EXCEPT HIGH STRENGTH BOLTS. HIGH STRENGTH BOLTS SHALL BE ASTM A325. ALL STRUCTURAL STEEL SHALL BE GALVANIZED AS PER THE SPECIFICATION.

ALL MATERIAL AND WORKMANSHIP SHALL COMPLY WITH THE APPLICABLE REQUIREMEMNTS OF THE STANDARD SPECIFICATIONS FOR ROADS AND STRUCTURES OF THE NC DEPARTMENT OF TRANSPORTATION DATED JANUARY 2006 AND WITH THE SPECIAL PROVISIONS.

THE CONTRACTOR, AT HIS OPTION, MAY USE STRESS RELIEVED STRANDS IN LIEU OF LOW RELAXATION STRANDS. DESIGN AND STRAND PATTERN MUST PROVIDE AT LEAST THE SAME NET COMPRESSIVE STRESS AFTER THE LOSSES.

THE ULTIMATE STRENGTH OF THE CORED SLAB UNIT MUST MEET THE REQUIREMENTS OF THE APPLICABLE AASHTO SPECIFICATIONS. STRESS RELIEVED STRANDS SHALL BE TENSIONED AND ANCHORED AT A LOAD EQUAL TO 70% OF ITS ULTIMATE STRENGTH. THIS APPLIED PRESTRESSED FORCE SHALL BE SHOWN ON THE PLANS. SIZE OF STRESS RELIEVED STRANDS SHALL NOT BE SMALLER THAN THOSE SHOWN FOR LOW RELAXATION STRANDS. DESIGN AND DETAIL PLANS USING STRESS RELIEVED STRANDS MUST BE SUBMITTED TO THE ENGINEER. ANY ADDITIONAL COST DUE TO THE USE OF STRESS RELIEVED STRANDS WILL BE PAID FOR BY THE CONTRACTOR. STRANDS SHALL BE CUT FLUSH WITH THE ENDS OF THE SLABS AND EPOXY COATED. SEE SPECIAL PROVISIONS.

A POSITIVE HOLD-DOWN SYSTEM MUST BE EMPLOYED TO PREVENT VOIDS FROM RISING.

SPIRAL WIRE REINFORCEMENT MAY BE USED IN LIEU OF DEFORMED BARS FOR STIRRUPS. (MIN. W3.5 x 6" PITCH).

UNLESS OTHERWISE NOTED ON THE PLANS, ALL EXPOSED CORNERS ON STRUCTURES SHALL BE CHAMFERED 3/4".

FOR DEFLECTION TABLE, SEE "PRECAST CONCRETE BARRIER RAIL SECTIONS" SHEET.

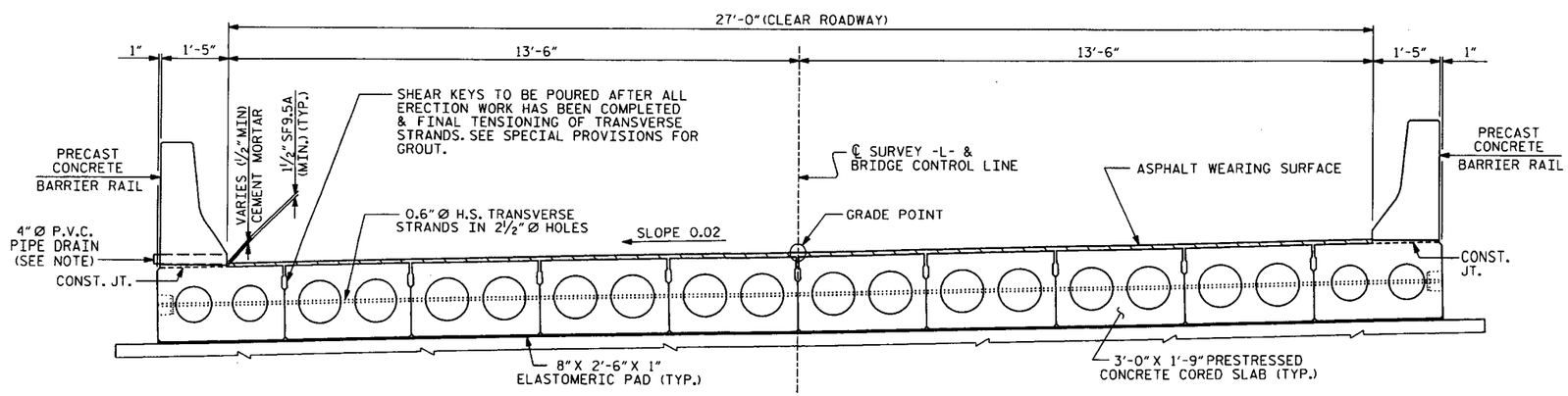

TYPICAL SECTION

NOTE: 4" Ø PVC DRAINS THROUGH THE PRECAST BARRIER RAIL ARE REQUIRED ON THE LEFT SIDE OF BRIDGE ONLY. NO DECK DRAINS ARE ALLOWED OVER OPEN WATER.

WBS NO. 33811.3.1

STANLY COUNTY

STATION: 12+79.09 -L-

REPLACES BRIDGE NO. 57

STATE OF NORTH CAROLINA
DEPARTMENT OF TRANSPORTATION
RALEIGH

PRESTRESSED CORED SLAB DETAILS 25' & 45' SPANS

27' CLEAR ROADWAY - 90° SKEW

NORTH CAROLINA PROFESSIONAL SEAL 023908 ENGINEER MARK A. AVERETTE 4-28-11

PLANS PREPARED BY:

SIMPSON ENGINEERS & ASSOCIATES
5520 Dillard Drive
Suite 120
Cary, NC 27518
(919) 852-0468
(919) 852-0598 (Fax)
www.simpsonengr.com
LICENSURE NO. C-2521

REVISIONS						
NO.	BY:	DATE:	NO.	BY:	DATE:	
1			3			
2			4			

SHEET NO. 15
TOTAL SHEETS 31

DRAWN BY : D.G. VESTER DATE : 2/11
CHECKED BY : M.A. AVERETTE DATE : 2/11

4/28/2011 3:11:04 PM g:\projects\bmu\stanly 57\drawings\B4644_sd_ts_01.dgn

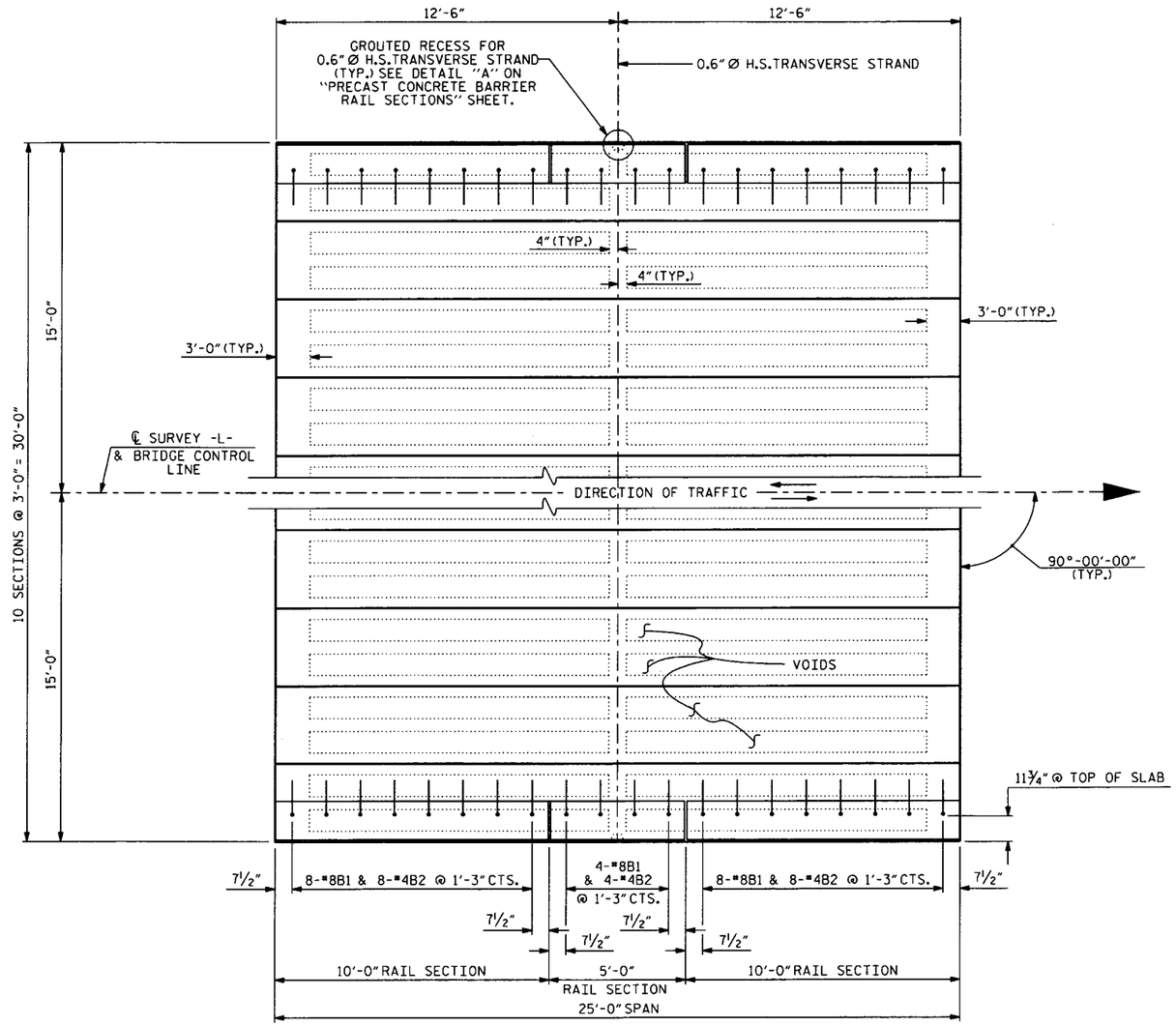

PLAN OF SPAN

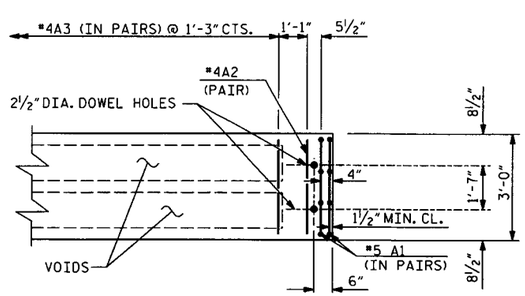

PART PLAN - SLAB SECTION

WBS NO. 33811.3.1

STANLY COUNTY

STATION: 12+79.09 -L-

REPLACES BRIDGE NO. 57

STATE OF NORTH CAROLINA
DEPARTMENT OF TRANSPORTATION
RALEIGH

PRESTRESSED CORED SLAB 25' SPAN

27' CLEAR ROADWAY - 90° SKEW

NORTH CAROLINA PROFESSIONAL SEAL 023908 ENGINEER MARK A. AVERETTE
4-28-11

PLANS PREPARED BY:

SIMPSON ENGINEERS & ASSOCIATES
5520 Dillard Drive
Suite 120
Cary, NC 27518
(919) 852-0468
(919) 852-0598 (Fax)
www.simpsonengr.com
LICENSURE NO. C-2521

REVISIONS						
NO.	BY:	DATE:	NO.	BY:	DATE:	
1			3			
2			4			

SHEET NO. 16

TOTAL SHEETS 31

DRAWN BY : D.G. VESTER DATE : 2/11
CHECKED BY : M.A. AVERETTE DATE : 2/11

4/28/2011 3:11:06 PM g:\projects\bmu\stanly 57\drawings\B4644_sd_csl_01.dgn

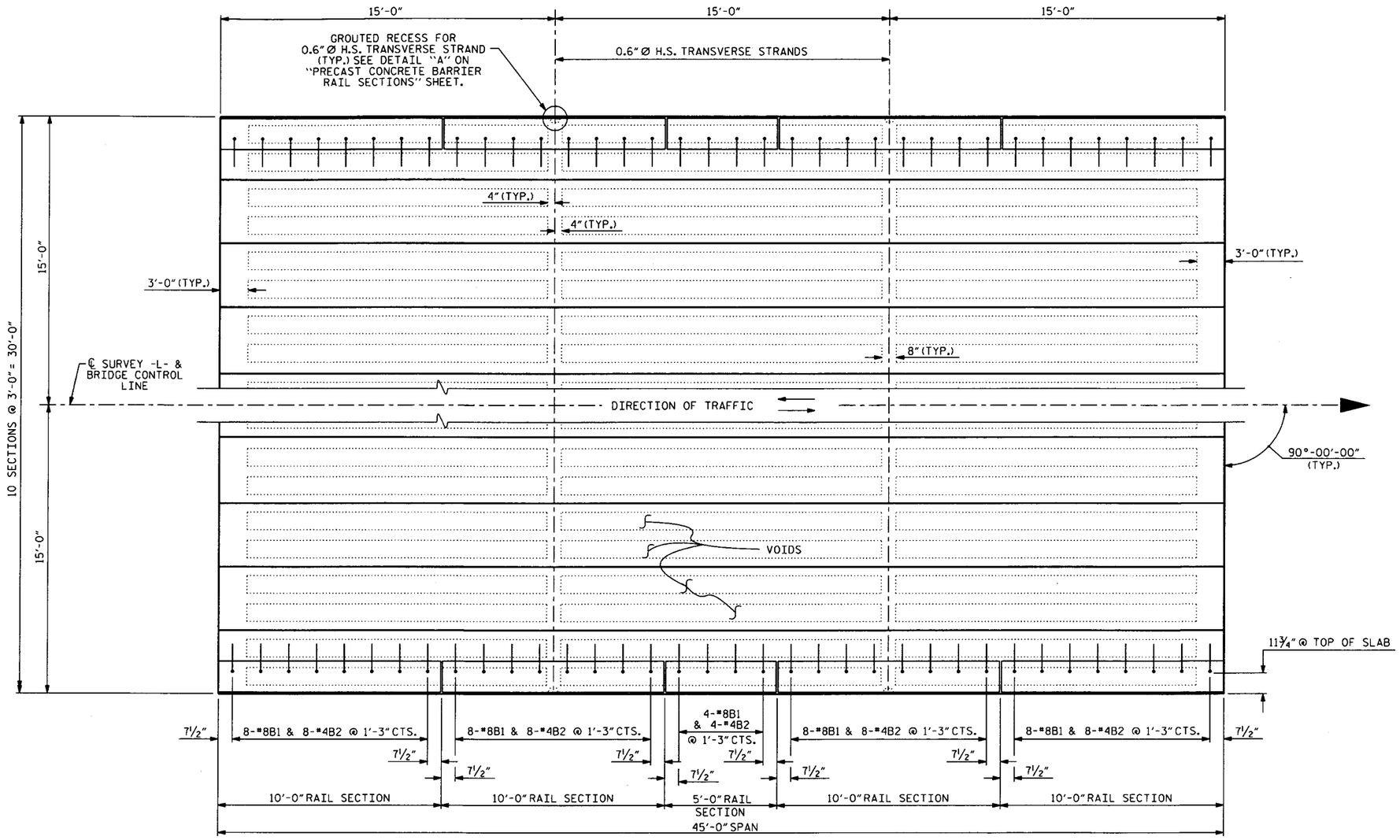

PLAN OF SPAN

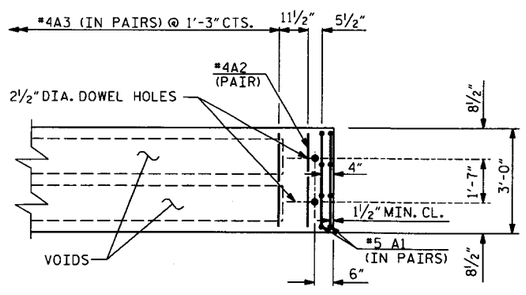

PART PLAN - SLAB SECTION

WBS NO. 33811.3.1

STANLY COUNTY

STATION: 12+79.09 -L-

REPLACES BRIDGE NO. 57

STATE OF NORTH CAROLINA
DEPARTMENT OF TRANSPORTATION
RALEIGH

PRESTRESSED CORED SLAB 45' SPAN

27' CLEAR ROADWAY - 90° SKEW

NORTH CAROLINA PROFESSIONAL SEAL 023908 ENGINEER MARK A. AVERETTE 4-28-11

PLANS PREPARED BY:

SIMPSON ENGINEERS & ASSOCIATES
5520 Dillard Drive
Suite 120
Cary, NC 27518
(919) 852-0468
(919) 852-0598 (Fax)
www.simpsonengr.com
LICENSURE NO. C-2521

REVISIONS							
NO.	BY:	DATE:	NO.	BY:	DATE:	SHEET NO.	17
1			3			TOTAL SHEETS	31
2			4				

DRAWN BY : D.G. VESTER DATE : 2/11
CHECKED BY : M.A. AVERETTE DATE : 2/11

4/28/2011 3:11:09 PM g:\projects\bmu\stanly 57\drawings\B4644_sd_cs2_01.dgn

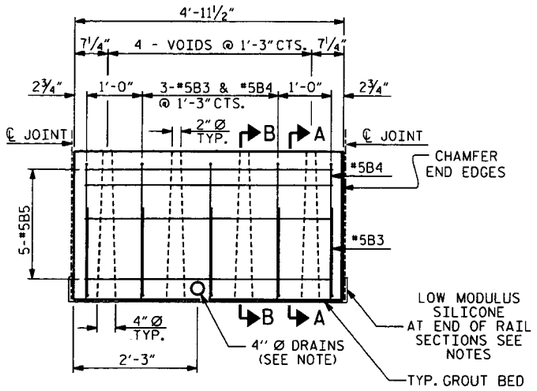

TYPICAL 5'-0" PRECAST UNIT

NOTE; 4" Ø PVC DRAINS THROUGH THE PRECAST BARRIER RAIL ARE REQUIRED ON THE LEFT SIDE OF THE BRIDGE ONLY. NO DECK DRAINS ARE ALLOWED OVER OPEN WATER.

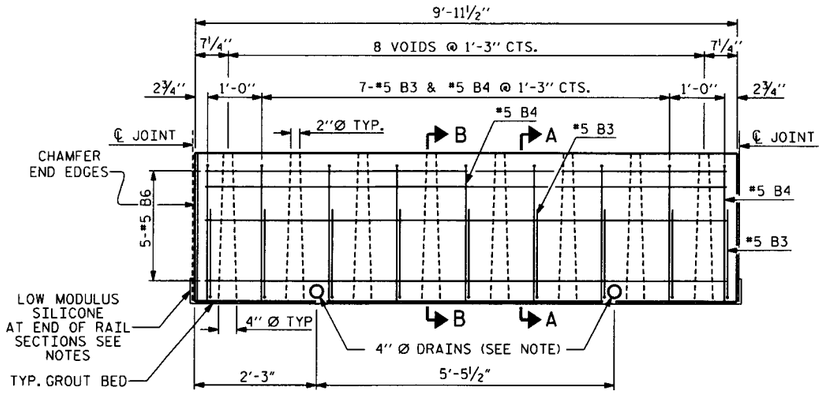

TYPICAL 10'-0" PRECAST UNIT

NOTE; 4" Ø PVC DRAINS THROUGH THE PRECAST BARRIER RAIL ARE REQUIRED ON THE LEFT SIDE OF THE BRIDGE ONLY. NO DECK DRAINS ARE ALLOWED OVER OPEN WATER.

NOTES

EACH PRECAST RAIL UNIT SHALL BE CAST WITH CLASS AA CONCRETE.

RAIL TO BE FLUSH WITH CORED SLAB UNITS AT EACH END OF SPAN.

EACH PRECAST RAIL UNIT SHALL BE SUPPLIED WITH LIFTING DEVICE(S). NO CABLES ARE TO BE WRAPPED AROUND THE RAIL UNITS FOR LIFTING.

THE EXPANSION JOINT SEALER SHALL BE LOW MODULUS SILICONE SEALANT. SEE SECTION 1028-4 OF THE STANDARD SPECIFICATIONS.

CONCRETE CHAMFERS:
UNLESS OTHERWISE NOTED ON THE PLANS, ALL EXPOSED CORNERS ON STRUCTURES SHALL BE CHAMFERED ¾" WITH THE FOLLOWING EXCEPTIONS: TOP CORNERS OF CURBS MAY BE ROUNDED TO 1½" RADIUS WHICH IS BUILT INTO CURB FORMS; CORNERS OF TRANSVERSE FLOOR EXPANSION JOINTS SHALL BE ROUNDED WITH A ¼" FINISHING TOOL UNLESS OTHERWISE REQUIRED ON PLANS; AND CORNERS OF EXPANSION JOINTS IN THE ROADWAY FACES AND TOPS OF CURBS AND SIDEWALKS SHALL BE ROUNDED TO A ¼" RADIUS WITH A FINISHING STONE OR TOOL UNLESS OTHERWISE ON PLANS.

GROUT SHALL BE 5" ABOVE GROUT BED BETWEEN RAIL SECTIONS EXCEPT AT END BENTS WHERE LOW MODULUS SILICON SHALL BE SUBSTITUTED IN PLACE OF GROUT.

BILL OF MATERIAL FOR ONE 5'-0" RAIL SECTION

BAR	NO.	SIZE	TYPE	LENGTH	WEIGHT
B3	5	#5	1	2'-8"	14
B4	5	#5	2	4'-11"	26
B5	5	#5	STR.	4'-7"	24
REINFORCING STEEL LBS. =					64
CLASS AA CONCRETE CU. YDS. =					0.5

BILL OF MATERIAL FOR ONE 10'-0" RAIL SECTION

BAR	NO.	SIZE	TYPE	LENGTH	WEIGHT
B3	9	#5	1	2'-8"	25
B4	9	#5	2	4'-11"	46
B6	5	#5	STR.	9'-7"	50
REINFORCING STEEL LBS. =					121
CLASS AA CONCRETE CU. YDS. =					1.0

BAR TYPES

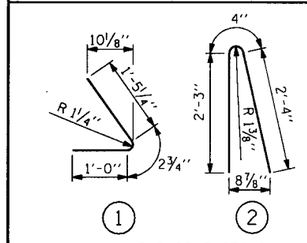

ALL BAR DIMENSIONS ARE OUT TO OUT

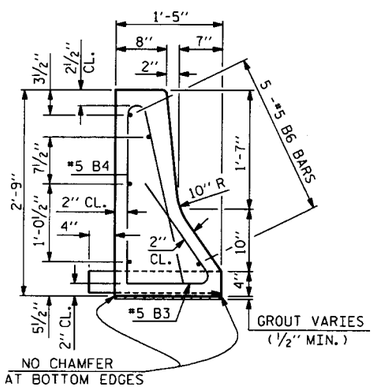

SECTION A-A

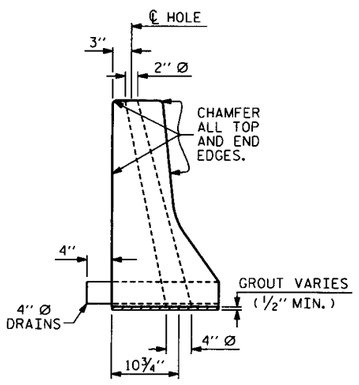

SECTION B-B

EXTERIOR SLAB UNIT	25'	45'
CAMBER (SLAB UNIT ALONE IN PLACE)	⅛" (UP)	1⅛" (UP)
DEFLECTION (SUPERIMPOSED DEAD LOAD)	* 0" (DOWN)	* 3/16" (DOWN)
FINAL DEFLECTION	⅛" (UP)	⅞" (UP)
* INCLUDES FUTURE WEARING SURFACE		

INTERIOR SLAB UNIT	25'	45'
CAMBER (SLAB UNIT ALONE IN PLACE)	⅛" (UP)	1¼" (UP)
DEFLECTION (SUPERIMPOSED DEAD LOAD)	* 0" (DOWN)	* 3/16" (DOWN)
FINAL DEFLECTION	⅛" (UP)	1 1/16" (UP)
* INCLUDES FUTURE WEARING SURFACE		

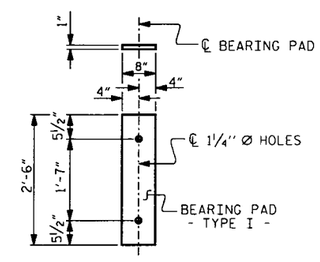

FIXED END
(TYPE I - 60 REO'D)

ELASTOMERIC BEARING DETAILS

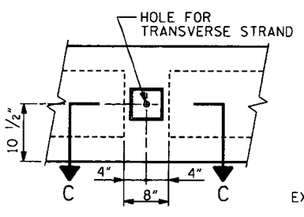

ELEVATION

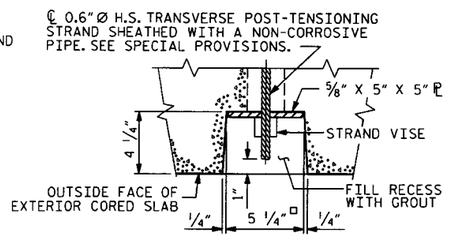

SECTION C-C

DETAIL "A"
GROUTED RECESS AT END OF POST-TENSIONED STRAND CORED SLAB

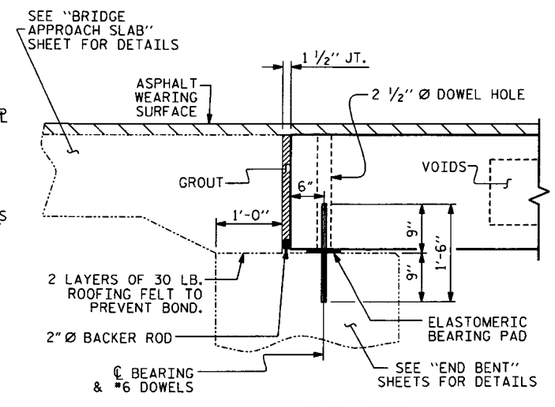

ELEVATION

SECTION AT END BENT

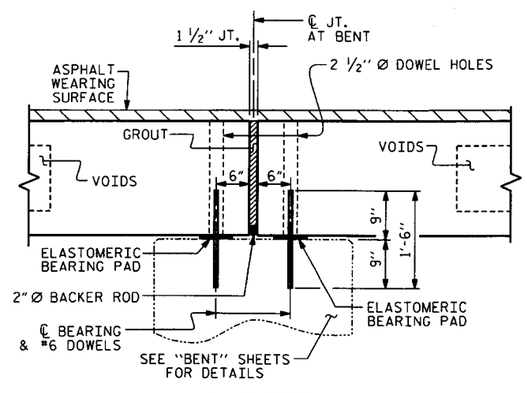

ELEVATION

SECTION AT BENT

WBS NO. 33811.3.1
STANLY COUNTY
STATION: 12+79.09 -L-

REPLACES BRIDGE NO. 57

STATE OF NORTH CAROLINA
DEPARTMENT OF TRANSPORTATION
RALEIGH

PRECAST CONCRETE BARRIER RAIL SECTIONS 25' & 45' SPAN

27' CLEAR ROADWAY - 90° SKEW

NORTH CAROLINA PROFESSIONAL SEAL 023908 ENGINEER M. A. AVERETTE
4-28-11

PLANS PREPARED BY:
SIMPSON ENGINEERS & ASSOCIATES
5520 Dillard Drive
Suite 120
Cary, NC 27518
(919) 852-0468
(919) 852-0598 (Fax)
www.simpsonengr.com
LICENSURE NO. C-2521

REVISIONS								SHEET NO.
NO.	BY:	DATE:	NO.	BY:	DATE:			18
1			3					TOTAL SHEETS
2			4					31

DRAWN BY : D.C. VESTER DATE : 2/11
CHECKED BY : M.A. AVERETTE DATE : 2/11

4/28/2011 3:11:11 PM g:\projects\bmu\stanly 57\drawings\B4644_sd_br_01.dgn

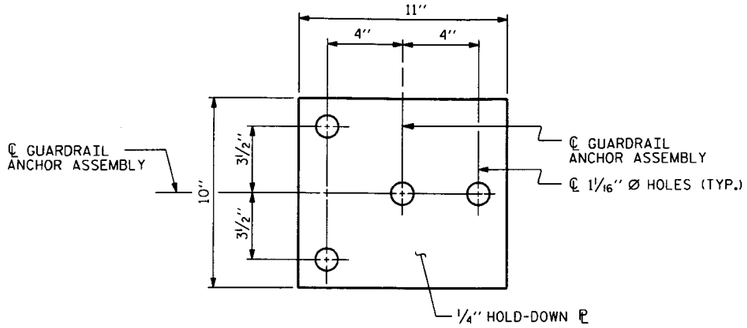

PLAN

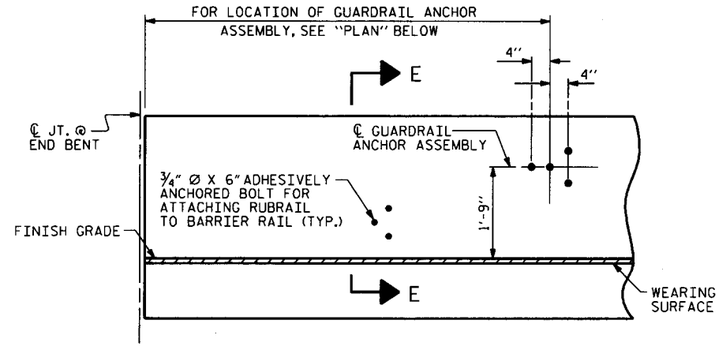

ELEVATION

FOR LOCATION OF RUBRAIL, SEE ROADWAY STD. 862.03

NOTES

THE GUARDRAIL ANCHOR ASSEMBLY SHALL CONSIST OF A ¼" HOLD DOWN PLATE AND 4 - ⅞" Ø BOLTS WITH NUTS AND WASHERS, RUBRAIL, AND ADHESIVELY ANCHORED BOLTS.

THE HOLD-DOWN PLATE SHALL CONFORM TO AASHTO M270 GRADE 36. AFTER FABRICATION, THE HOLD-DOWN PLATE SHALL BE HOT-DIP GALVANIZED IN ACCORDANCE WITH AASHTO M111.

BOLTS SHALL CONFORM TO THE REQUIREMENTS OF ASTM A307 AND NUTS SHALL CONFORM TO THE REQUIREMENTS OF AASHTO M291. BOLTS, NUTS AND WASHERS SHALL BE GALVANIZED. (AT THE CONTRACTOR'S OPTION, STAINLESS STEEL BOLTS, NUTS AND WASHERS MAY BE USED AS AN ALTERNATE FOR THE ⅞" Ø GALVANIZED BOLTS, NUTS AND WASHERS. THEY SHALL CONFORM TO OR EXCEED THE MECHANICAL REQUIREMENTS OF ASTM A307. THE USE OF THIS ALTERNATE SHALL BE APPROVED BY THE ENGINEER.)

THE GUARDRAIL ANCHOR ASSEMBLY IS REQUIRED AT ALL POINTS WHERE APPROACH GUARDRAIL IS TO BE ATTACHED TO THE END OF BARRIER RAIL. FOR POINTS OF ATTACHMENT, SEE SKETCH.

AFTER INSTALLATION, THE EXPOSED THREAD OF THE BOLT SHALL BE BURRED WITH A SHARP POINTED TOOL.

THE COST OF THE GUARDRAIL ANCHOR ASSEMBLY SHALL BE INCLUDED IN THE UNIT CONTRACT PRICE BID FOR GUARDRAIL ANCHOR UNIT TYPE B-77.

THE 1 ¼" Ø HOLES SHALL BE FORMED OR DRILLED WITH A CORE BIT. IMPACT TOOLS WILL NOT BE PERMITTED. ANY CONCRETE DAMAGED BY THIS WORK SHALL BE REPAIRED TO THE SATISFACTION OF THE ENGINEER.

THE C6 X 8.2 RUBRAIL IS TO BE ADHESIVELY ANCHORED TO THE RAIL USING THREE ¾" Ø X 6" BOLTS WITH WASHERS. LEVEL ONE FIELD TESTING IS REQUIRED, AND THE YIELD LOAD OF THE ¾" Ø BOLT IS 12 KIPS. FOR ADHESIVELY ANCHORED ANCHOR BOLTS OR DOWELS, SEE SPECIAL PROVISIONS. SEE ROADWAY STANDARD 862.03 FOR DETAILS AND LOCATION OF THE RUBRAIL.

FOR ADDITIONAL GUARDRAIL INFORMATION, SEE "GUARDRAIL ANCHOR UNIT" SHEET.

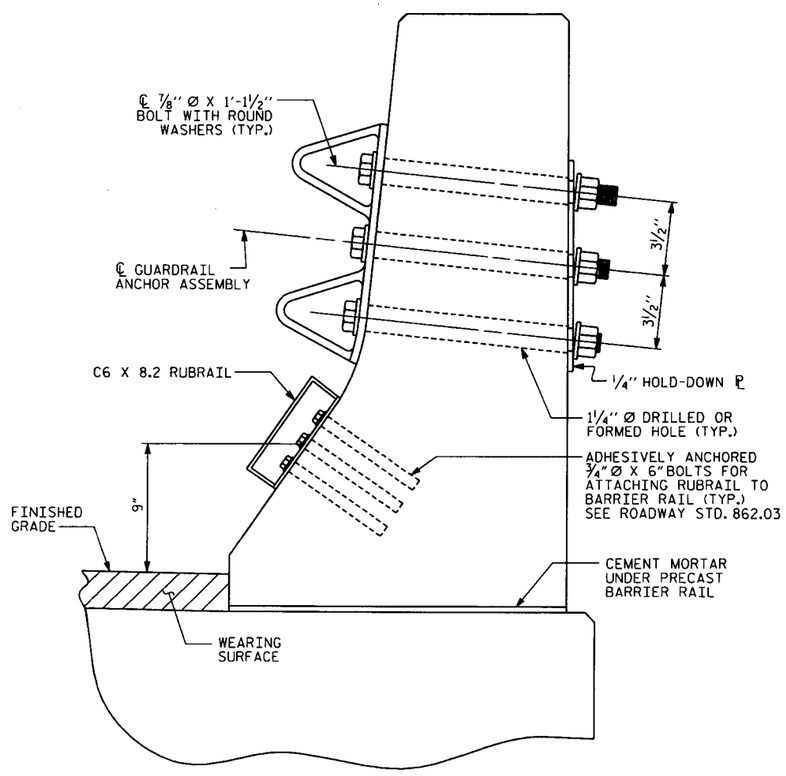

SECTION E-E

GUARDRAIL ANCHOR ASSEMBLY DETAILS

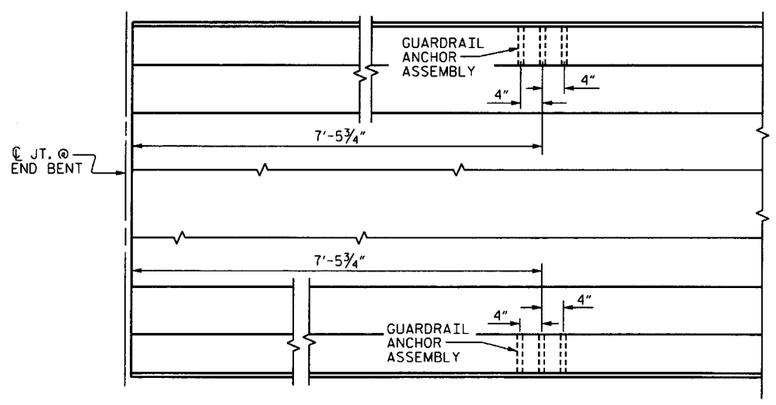

PLAN

LOCATION OF ANCHORS FOR GUARDRAIL

END BENT #1 SHOWN, END BENT #2 SIMILAR.

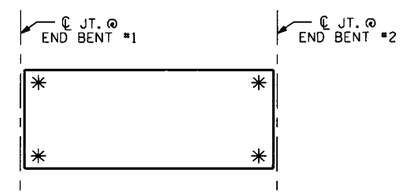

SKETCH SHOWING POINTS OF ATTACHMENTS

✳ DENOTES GUARDRAIL ANCHOR ASSEMBLY

WBS NO. 33811.3.1

STANLY COUNTY

STATION: 12+79.09 -L-

REPLACES BRIDGE NO. 57

NORTH CAROLINA PROFESSIONAL SEAL 023908 ENGINEER MARK A. AVERETTE 4-28-11

PLANS PREPARED BY:

SIMPSON ENGINEERS & ASSOCIATES
5520 Dillard Drive
Suite 120
Cary, NC 27518
(919) 852-0468
(919) 852-0598 (Fax)
www.simpsonengr.com
LICENSURE NO. C-2521

STATE OF NORTH CAROLINA
DEPARTMENT OF TRANSPORTATION
RALEIGH

GUARDRAIL ANCHORAGE FOR BARRIER RAIL

27' CLEAR ROADWAY - 90° SKEW

REVISIONS							
NO.	BY:	DATE:	NO.	BY:	DATE:	SHEET NO.	19
1			3			TOTAL SHEETS	31
2			4				

ASSEMBLED BY : D. G. VESTER	DATE : 11-10
CHECKED BY : M.A.AVERETTE	DATE : 11-10
DRAWN BY : TLA 5/06	ADDED 5/1/06R KMM/GM
CHECKED BY : GM 5/06	

4/28/2011 3:11:13 PM g:\projects\bmu\stanly 57\drawings\B4644_sd_gr_01.dgn

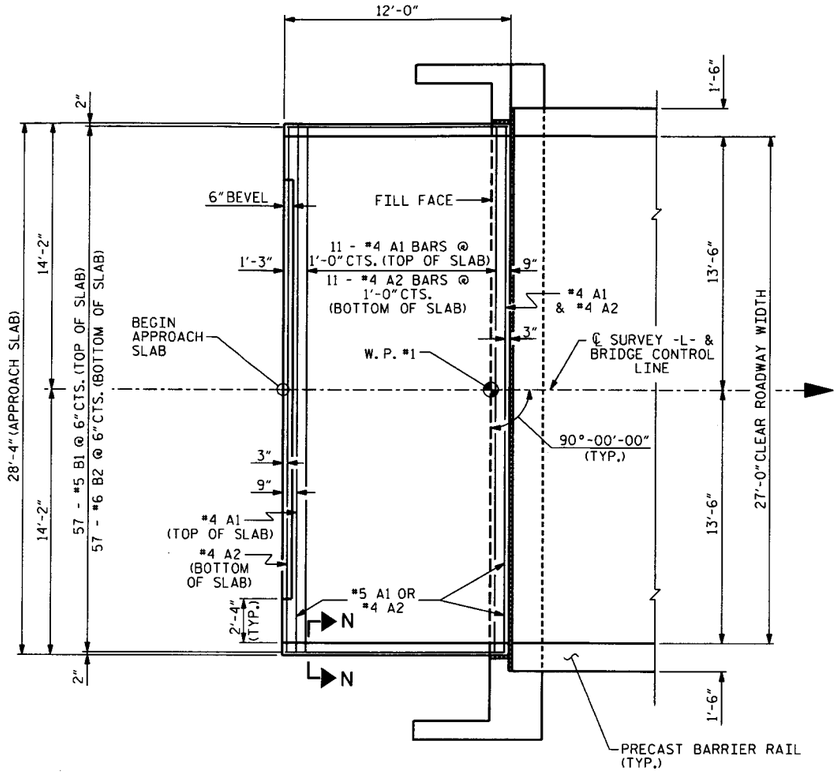

PLAN OF APPROACH SLAB

BEGIN APPROACH SLAB SHOWN, END APPROACH SLAB SIMILAR

NOTES

THE COST OF THE CURB ON THE APPROACH SLAB SHALL BE INCLUDED IN THE LUMP SUM CONTRACT PRICE BID FOR BRIDGE APPROACH SLABS.

TEMPORARY DRAINAGE AND TEMPORARY BERM AND SLOPE DRAINS WILL BE PAID FOR UNDER THE LUMP SUM PRICE FOR BRIDGE APPROACH SLAB.

FOR BRIDGE APPROACH FILL INCLUDING FABRIC, 4" Ø DRAINAGE PIPE, AND #78M STONE BACKFILL, SEE BRIDGE APPROACH FILLS, SHEET 20.

APPROACH SLAB SHALL NOT BE CONSTRUCTED PRIOR TO COMPLETION OF THE BRIDGE DECK.

FABRIC SHALL BE TYPE 1 ENGINEERING FABRIC IN ACCORDANCE WITH THE STANDARD SPECIFICATIONS SECTION 1056.

#78M STONE BACKFILL (CLASS V SELECT MATERIAL) SHALL BE IN ACCORDANCE WITH STANDARD SPECIFICATIONS SECTION 1016.

#78M STONE BACKFILL IS TO BE CONTINUOUS ALONG FILL FACE OF BACKWALL FROM OUTSIDE EDGE TO OUTSIDE EDGE OF APPROACH SLAB.

FOR THE 4" Ø DRAINAGE PIPE OUTLET(S), SEE BRIDGE APPROACH FILLS, SHEET 20.

AREA BETWEEN THE WINGWALL AND APPROACH SLAB SHALL BE GRADED TO DRAIN THE WATER AWAY FROM THE FILL FACE OF THE BRIDGE AND SHALL BE PAVED. SEE ROADWAY PLANS.

THE 6" COMP. A.B.C. SHALL BE FLUSH WITH THE ROADWAY END OF THE APPROACH SLAB AND SHALL EXTEND 1'-0" OUTSIDE OF EACH EDGE OF THE APPROACH SLAB.

THE CONTRACTOR MAY USE 4" TYPE B-25.0B ASPHALT CONCRETE BASE COURSE IN LIEU OF 6" COMP. A.B.C. IF THIS OPTION IS USED, THE BASE COURSE SHALL BE FLUSH WITH THE ROADWAY END OF THE APPROACH SLAB, AND THE WIDTH SHALL BE THE SAME AS THAT OF THE APPROACH SLAB.

THE CONTRACTOR MAY USE 5" CLASS "A" CONCRETE BASE IN LIEU OF 6" COMP. A.B.C. IF THIS OPTION IS USED, THE CONCRETE BASE SHALL BE FLUSH WITH THE ROADWAY END OF THE APPROACH SLAB, AND THE WIDTH SHALL BE THE SAME AS THAT OF THE APPROACH SLAB. THE CONCRETE SHALL BE FINISHED TO A SMOOTH SURFACE AND A LAYER OF 30 LB ROOFING FELT SHALL BE PLACED BETWEEN THE CONCRETE BASE AND THE APPROACH SLAB TO PREVENT BOND. THE APPROACH SLAB SHALL NOT BE CAST UNTIL THE CONCRETE BASE HAS REACHED AN AGE OF THREE CURING DAYS.

FOR JOINT DETAILS, SEE "PRESTRESSED CONCRETE CORED SLAB UNIT" SHEETS.

THE JOINT AT THE END BENT SHALL BE GROUTED AS SOON AS PRACTICAL AFTER THE CONSTRUCTION OF THE APPROACH SLABS.

APPROACH SLAB GROOVING IS NOT REQUIRED.

BILL OF MATERIAL
FOR ONE APPROACH SLAB (2 REQ'D)

BAR	NO.	SIZE	TYPE	LENGTH	WEIGHT
*A1	13	4	STR	28'-0"	243
A2	13	4	STR	28'-0"	243
*B1	57	5	STR	11'-2"	664
B2	57	6	STR	11'-8"	999
REINFORCING STEEL				LBS.	1,242
* EPOXY COATED REINFORCING STEEL				LBS.	907
CLASS "A" CONCRETE				C.Y.	14.2

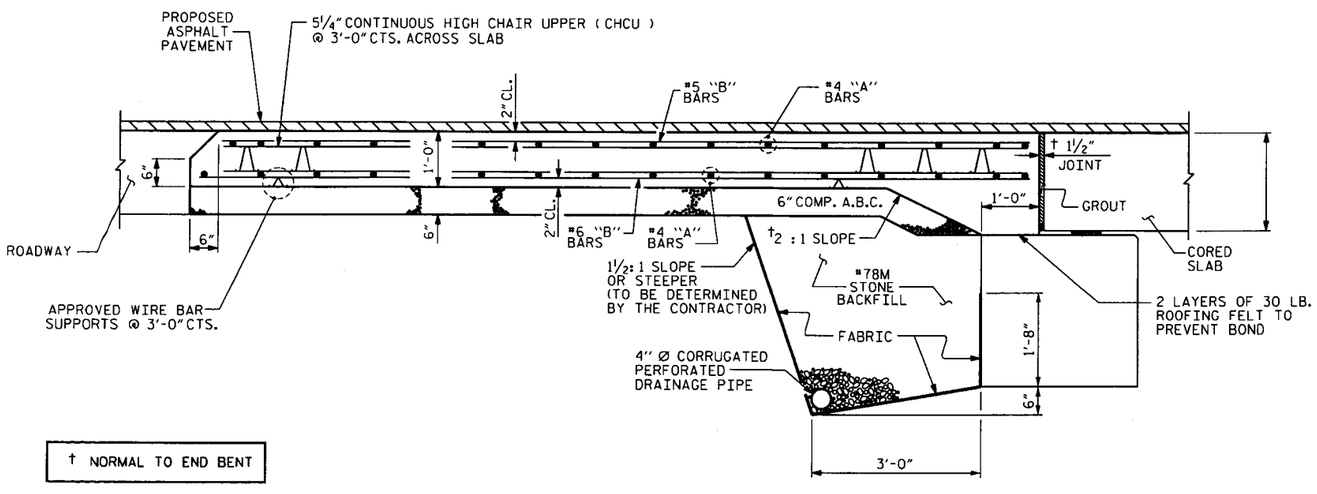

† NORMAL TO END BENT

SECTION THRU SLAB

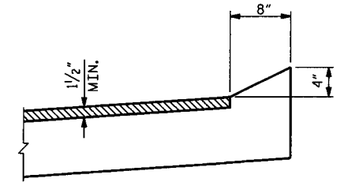

SECTION N-N

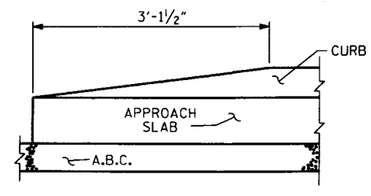

END OF CURB WITHOUT SHOULDER BERM GUTTER

CURB DETAILS

WBS NO. 33811.3.1

STANLY COUNTY

STATION: 12+79.09 -L-

REPLACES BRIDGE NO. 57

STATE OF NORTH CAROLINA
DEPARTMENT OF TRANSPORTATION
RALEIGH

APPROACH SLAB

27' CLEAR ROADWAY - 90° SKEW

NORTH CAROLINA PROFESSIONAL ENGINEER SEAL 023908 MARK A. AVERETTE 4-28-11

PLANS PREPARED BY:

SIMPSON ENGINEERS & ASSOCIATES
5520 Dillard Drive
Suite 120
Cary, NC 27518
(919) 852-0468
(919) 852-0598 (Fax)
www.simpsonengr.com
LICENSURE NO. C-2521

REVISIONS						
NO.	BY:	DATE:	NO.	BY:	DATE:	
1			3			
2			4			

SHEET NO. 20

TOTAL SHEETS 31

DRAWN BY : D.G. VESTER DATE : 2/11
CHECKED BY : M.A. AVERETTE DATE : 2/11

4/28/2011 3:11:15 PM g:\projects\bmu\stanly 57\drawings\B4644_sd_as1_01.dgn

PROJECT REFERENCE NO.	SHEET NO.
B-4644	21

PLAN VIEW
12' APPROACH SLAB

STATE OF NORTH CAROLINA DEPT. OF TRANSPORTATION DIVISION OF HIGHWAYS RALEIGH, N.C.

ENGLISH DETAIL DRAWING FOR
BRIDGE APPROACH FILLS
CORED SLAB & BOX BEAM BRIDGES
SUB REGIONAL TIER

SHEET 1 OF 2
422D11

SECTION A-A

SECTION B-B

12' APPROACH SLAB

STATE OF NORTH CAROLINA DEPT. OF TRANSPORTATION DIVISION OF HIGHWAYS RALEIGH, N.C.

ENGLISH DETAIL DRAWING FOR
BRIDGE APPROACH FILLS
CORED SLAB & BOX BEAM BRIDGES
SUB REGIONAL TIER

SHEET 2 OF 2
422D11

PROJECT SERVICES UNIT
STANDARDS AND SPECIAL DESIGN
Office 919-250-4128 FAX 919-250-4119

BRIDGE APPROACH FILLS
CORED SLAB & BOX BEAM BRIDGES
SUB REGIONAL TIER

ORIGINAL BY: K. A. Kempf DATE: 6-10-08
MODIFIED BY: DATE:
CHECKED BY: DATE:
FILE SPEC.: kkempf\english\bridge approach fills.dgn

4/28/2011 3:11:17 PM g:\projects\bmu\statewy 5f\drawings\B4644_sd_of_01.dgn

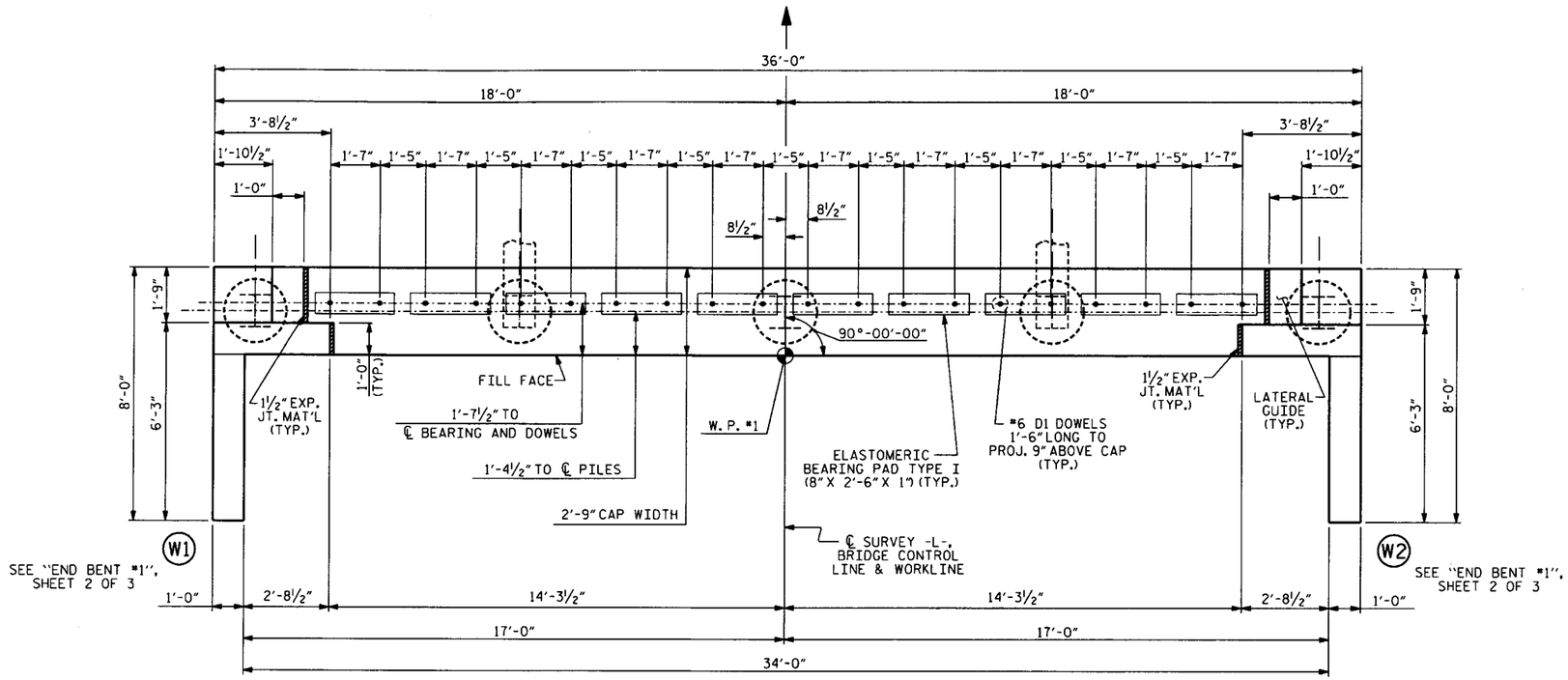

PLAN

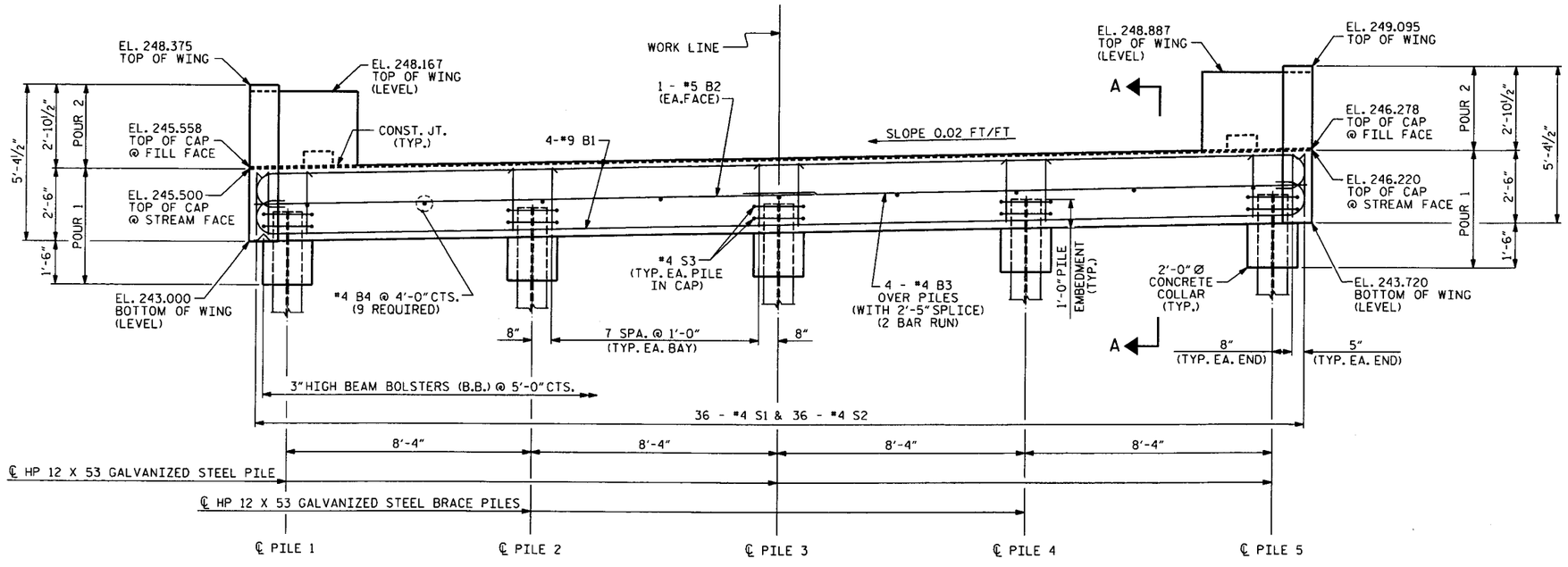

ELEVATION

NOTES

STIRRUPS IN CAP MAY BE SHIFTED AS NECESSARY TO CLEAR #6 D1 DOWELS.

TOP OF ℄ PILE ELEVATIONS	
PILE	ELEVATION
1	244.027
2	244.193
3	244.360
4	244.527
5	244.693

WBS NO. 33811.3.1

STANLY COUNTY

STATION: 12+79.09 -L-

REPLACES BRIDGE NO. 57 SHEET 1 OF 3

STATE OF NORTH CAROLINA
DEPARTMENT OF TRANSPORTATION
RALEIGH

SUBSTRUCTURE

END BENT #1

27' CLEAR ROADWAY - 90° SKEW

NORTH CAROLINA PROFESSIONAL SEAL 023908 ENGINEER MARK A. AVERETTE
4-28-11

PLANS PREPARED BY:

SIMPSON ENGINEERS & ASSOCIATES
5520 Dillard Drive
Suite 120
Cary, NC 27518
(919) 852-0468
(919) 852-0598 (Fax)
www.simpsonengr.com
LICENSURE NO. C-2521

REVISIONS							
NO.	BY:	DATE:	NO.	BY:	DATE:	SHEET NO.	
1			3			22	
2			4			TOTAL SHEETS	
						31	

DRAWN BY : D.G. VESTER DATE : 2/11
CHECKED BY : M.A. AVERETTE DATE : 2/11

4/28/2011 3:11:20 PM g:\projects\bmu\stanly 57\drawings\B4644_sd_ebla_01.dgn

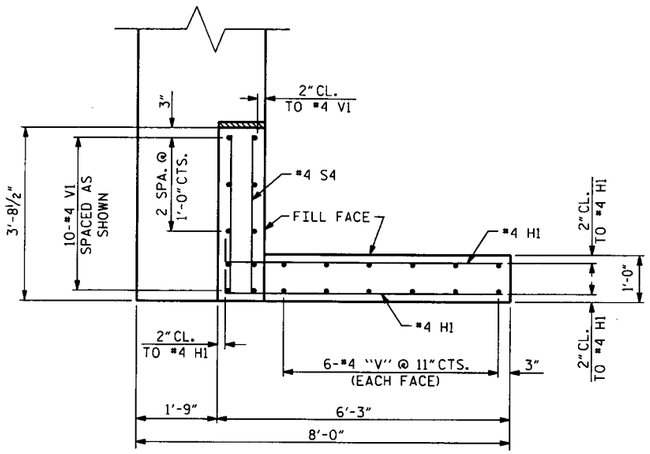

(W1) PLAN OF LEFT WING

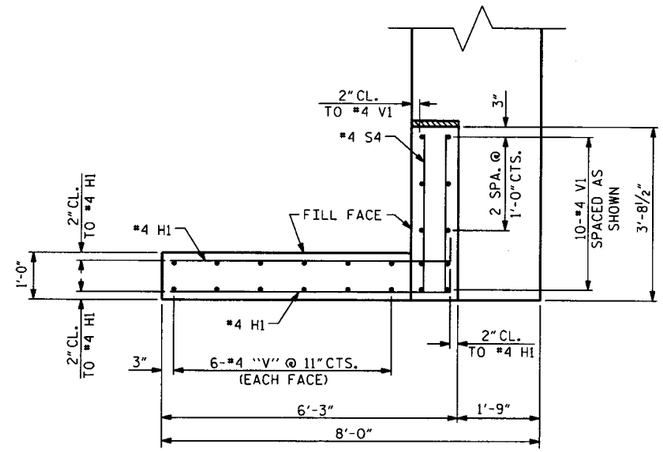

(W2) PLAN OF RIGHT WING

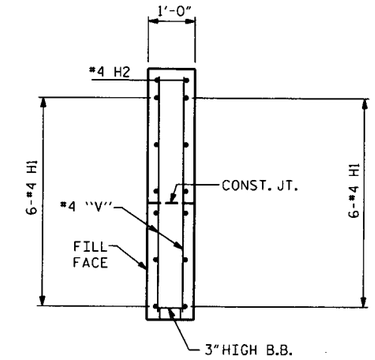

SECTION X-X

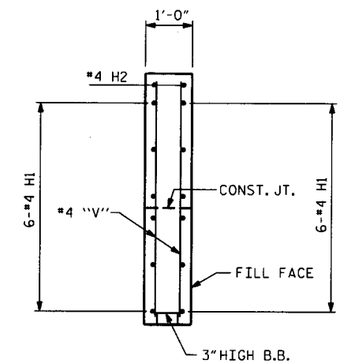

SECTION Y-Y

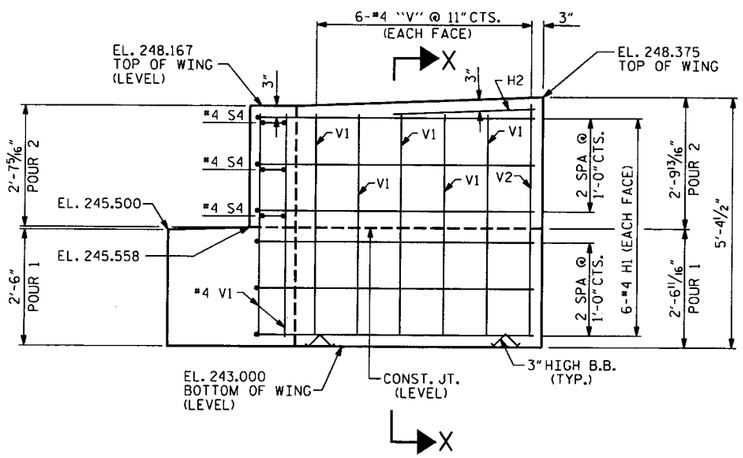

(W1) ELEVATION OF LEFT WING

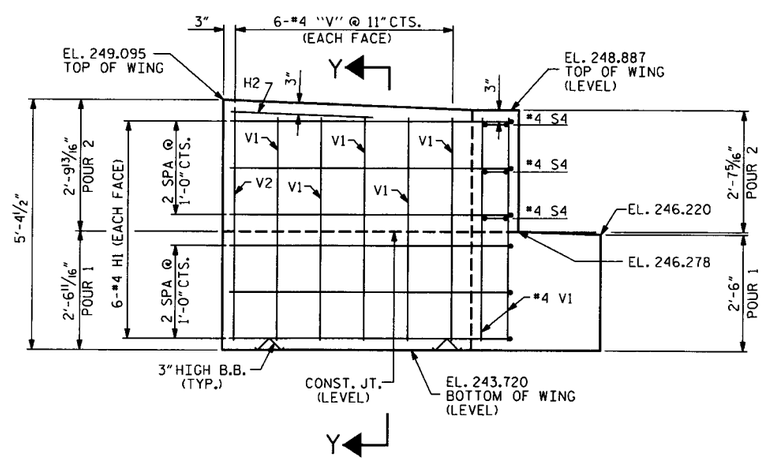

(W2) ELEVATION OF RIGHT WING

WBS NO. 33811.3.1

STANLY COUNTY

STATION: 12+79.09 -L-

REPLACES BRIDGE NO. 57 SHEET 2 OF 3

STATE OF NORTH CAROLINA
DEPARTMENT OF TRANSPORTATION
RALEIGH

SUBSTRUCTURE

END BENT #1

27' CLEAR ROADWAY - 90° SKEW

NORTH CAROLINA PROFESSIONAL SEAL 023908 ENGINEER MARK A. AVERETTE 4-28-11

PLANS PREPARED BY:

SIMPSON ENGINEERS & ASSOCIATES
5520 Dillard Drive
Suite 120
Cary, NC 27518
(919) 852-0468
(919) 852-0598 (Fax)
www.simpsonengr.com
LICENSURE NO. C-2521

REVISIONS						
NO.	BY:	DATE:	NO.	BY:	DATE:	
1			3			
2			4			

SHEET NO. 23
TOTAL SHEETS 31

DRAWN BY : D.G. VESTER DATE : 2/11
CHECKED BY : M.A. AVERETTE DATE : 2/11

4/28/2011 3:11:22 PM g:\projects\bmu\stanly 57\drawings\B4644_sd_ebtb_01.dgn

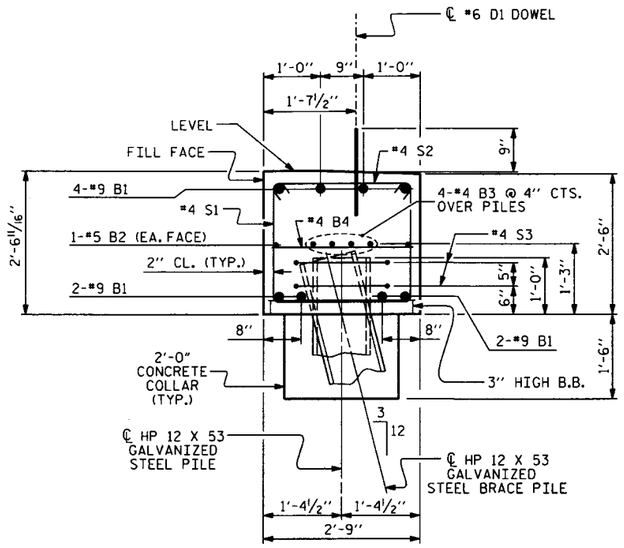

SECTION A-A

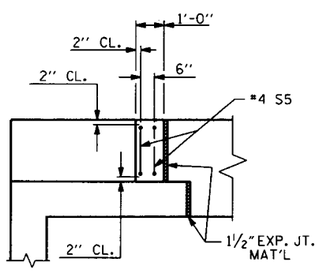

PLAN

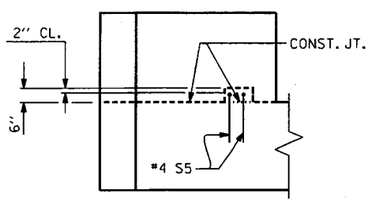

ELEVATION

LATERAL GUIDE DETAILS

BAR TYPES

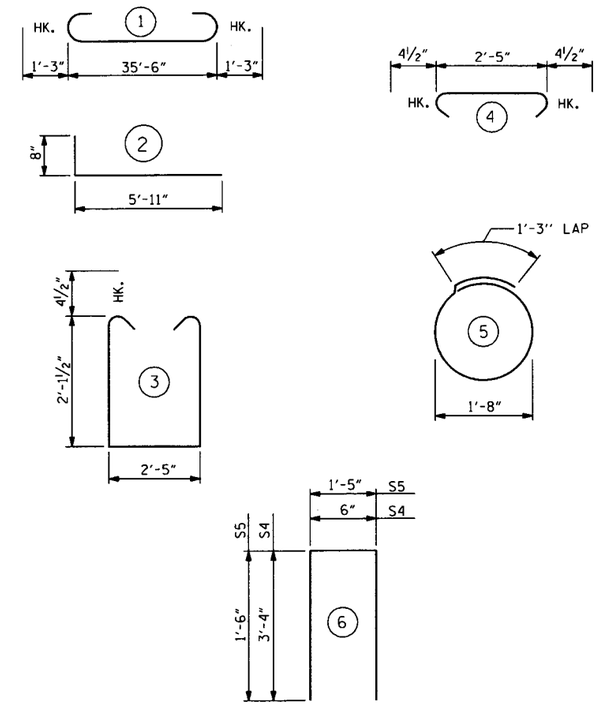

ALL BAR DIMENSIONS ARE OUT TO OUT

BILL OF MATERIAL

END BENT #1

BAR	NO.	SIZE	TYPE	LENGTH	WEIGHT
B1	8	9	1	38'-0"	1034
B2	2	5	STR	35'-6"	74
B3	8	4	STR	19'-0"	102
B4	9	4	STR	2'-5"	15
D1	20	6	STR	1'-6"	45
H1	24	4	2	6'-7"	106
H2	4	4	STR	3'-3"	9
S1	36	4	3	7'-5"	178
S2	36	4	4	3'-2"	76
S3	10	4	5	6'-6"	43
S4	6	4	6	7'-2"	29
S5	4	4	6	4'-5"	12
V1	40	4	STR	4'-10"	129
V2	4	4	STR	5'-0"	13

TOTAL REINFORCING STEEL 1865 LBS.

CLASS "A" CONCRETE BREAKDOWN

POUR #1	10.4 CU. YDS.
POUR #2	2.0 CU. YDS.
TOTAL	12.4 CU. YDS.

HP 12 X 53 GALVANIZED STEEL PILES

5 PILES REQUIRED - LIN. FEET 50.0

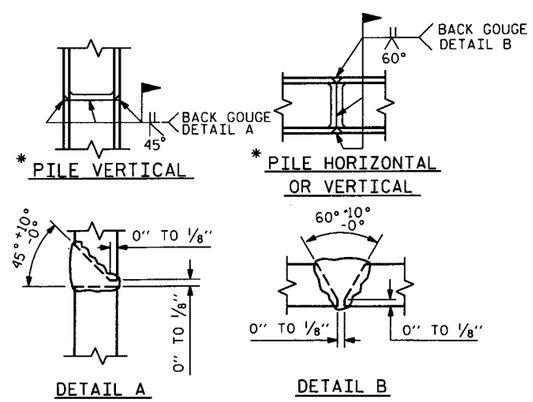

PILE SPLICE DETAILS

* POSITION OF PILE DURING WELDING.

WBS NO. 33811.3.1

STANLY COUNTY

STATION: 12+79.09 -L-

REPLACES BRIDGE NO. 57 SHEET 3 OF 3

STATE OF NORTH CAROLINA
DEPARTMENT OF TRANSPORTATION
RALEIGH

SUBSTRUCTURE

END BENT #1

27' CLEAR ROADWAY - 90° SKEW

NORTH CAROLINA PROFESSIONAL SEAL 023908 ENGINEER MARK A. AVERETTE
4-28-11

PLANS PREPARED BY:

SIMPSON ENGINEERS & ASSOCIATES
5520 Dillard Drive
Suite 120
Cary, NC 27518
(919) 852-0468
(919) 852-0598 (Fax)
www.simpsonengr.com
LICENSURE NO. C-2521

REVISIONS						SHEET NO.
NO.	BY:	DATE:	NO.	BY:	DATE:	24
1			3			TOTAL SHEETS
2			4			31

DRAWN BY : D.G. VESTER DATE : 2/11
CHECKED BY : M.A. AVERETTE DATE : 2/11

4/28/2011 3:11:24 PM g:\projects\bmu\stanly 57\drawings\B4644_sd_ebic_01.dgn

NOTES:

STIRRUPS IN THE CAP MAY BE SHIFTED AS NECESSARY TO CLEAR #6 D1 DOWELS.

HOOKS ON "M" BARS MAY BE TURNED AS NECESSARY FOR PLACING REINFORCING STEEL.

INVERT ALTERNATE STIRRUPS.

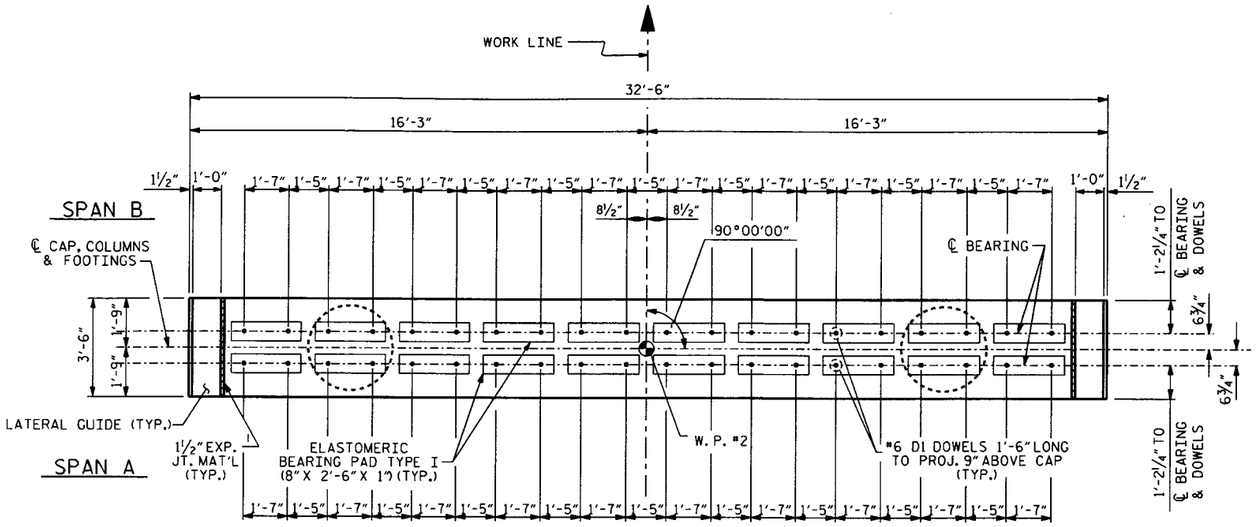
WORK LINE
32'-6"
16'-3"
16'-3"
SPAN B
SPAN A
℄ CAP, COLUMNS & FOOTINGS
℄ BEARING
90°00'00"
8½"
8½"
1½"
1'-0"
1'-7" 1'-5" 1'-7" 1'-5" 1'-7" 1'-5"

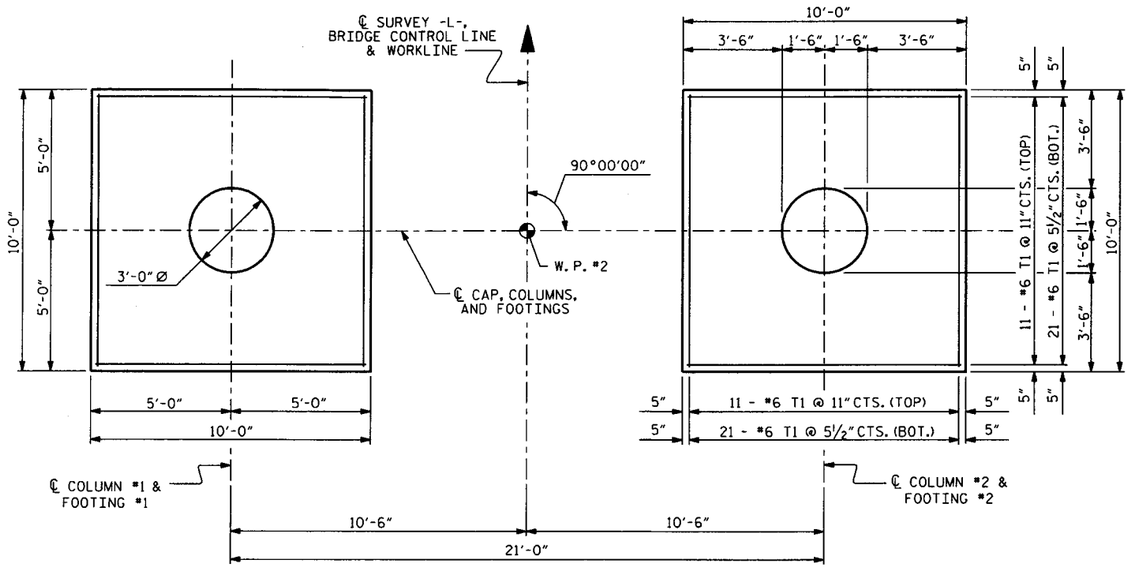

PLAN OF COLUMNS AND FOOTINGS

NOTE: REINFORCING STEEL AND DIMENSIONS ARE TYPICAL FOR EACH FOOTING.

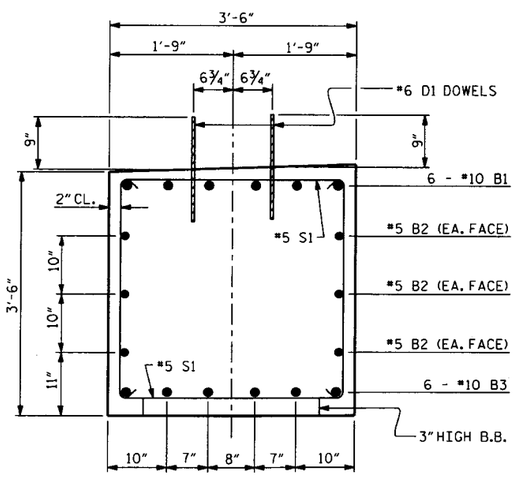

SECTION A-A

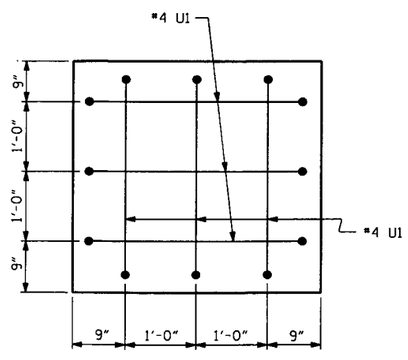

SECTION X-X

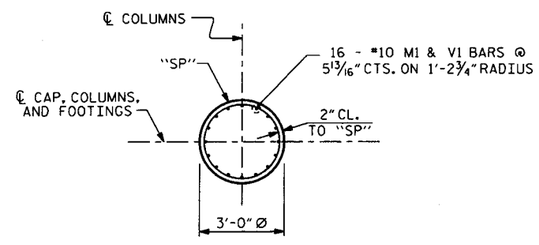

SECTION THRU COLUMN

(TYPICAL FOR ALL COLUMNS)

BAR TYPES

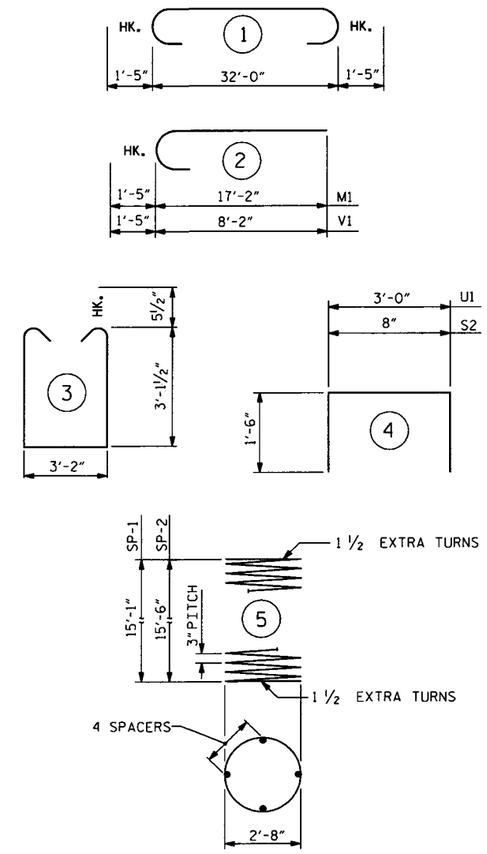

ALL BAR DIMENSIONS ARE OUT TO OUT.

BILL OF MATERIAL

FOR BENT #1

BAR	NO.	SIZE	TYPE	LENGTH	WEIGHT
B1	6	10	1	34'-10"	899
B2	6	5	STR	32'-0"	200
B3	6	10	STR	32'-0"	826
B4	4	4	STR	3'-2"	8
D1	40	6	STR	1'-6"	90
M1	32	10	2	18'-7"	2559
S1	39	5	3	10'-4"	420
S2	8	4	4	3'-8"	20
T1	128	6	STR	9'-6"	1826
U1	12	4	4	6'-0"	48
V1	32	10	2	9'-7"	1320
SP-1	1	**	5	522'-7"	349
SP-2	1	**	5	536'-4"	358

REINFORCING STEEL	8216 LBS.
SPIRAL REINFORCING STEEL	707 LBS.
CLASS "A" CONCRETE BREAKDOWN	
POUR #1 (FOOTINGS)	18.5 CU. YDS.
POUR #2 (COLUMNS)	7.9 CU. YDS.
POUR #3 (CAP)	15.1 CU. YDS.
TOTAL	41.5 CU. YDS.

** THE SP-1 AND SP-2 SPIRAL REINFORCING STEEL SHALL BE W20 OR D-20 COLD DRAWN WIRE OR #4 PLAIN OF DEFORMED BAR.

WBS NO. 33811.3.1

STANLY COUNTY

STATION: 12+79.09 -L-

REPLACES BRIDGE NO. 57 SHEET 2 OF 2

STATE OF NORTH CAROLINA
DEPARTMENT OF TRANSPORTATION
RALEIGH

SUBSTRUCTURE

BENT #1

27' CLEAR ROADWAY - 90° SKEW

NORTH CAROLINA PROFESSIONAL SEAL 023908 ENGINEER MARK A. AVERETTE 4-28-11

PLANS PREPARED BY:

SIMPSON ENGINEERS & ASSOCIATES
5520 Dillard Drive
Suite 120
Cary, NC 27518
(919) 852-0468
(919) 852-0598 (Fax)
www.simpsonengr.com
LICENSURE NO. C-2521

REVISIONS						
NO.	BY:	DATE:	NO.	BY:	DATE:	SHEET NO. 26
1			3			TOTAL SHEETS 31
2			4			

DRAWN BY : D.G. VESTER DATE : 2/11
CHECKED BY : M.A. AVERETTE DATE : 2/11

4/28/2011 3:11:29 PM g:\projects\bmu\stanly 57\drawings\B4644_sd.blb_01.dgn

NOTES:

STIRRUPS IN THE CAP MAY BE SHIFTED AS NECESSARY TO CLEAR #6 D1 DOWELS.

HOOKS ON "M" BARS MAY BE TURNED AS NECESSARY FOR PLACING REINFORCING STEEL.

INVERT ALTERNATE STIRRUPS.

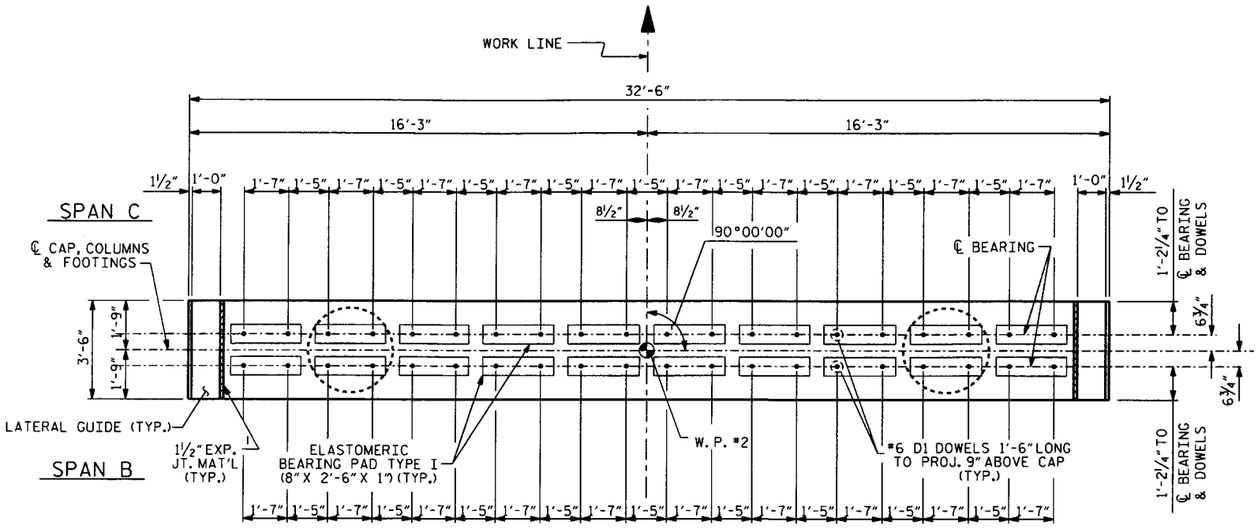

PLAN

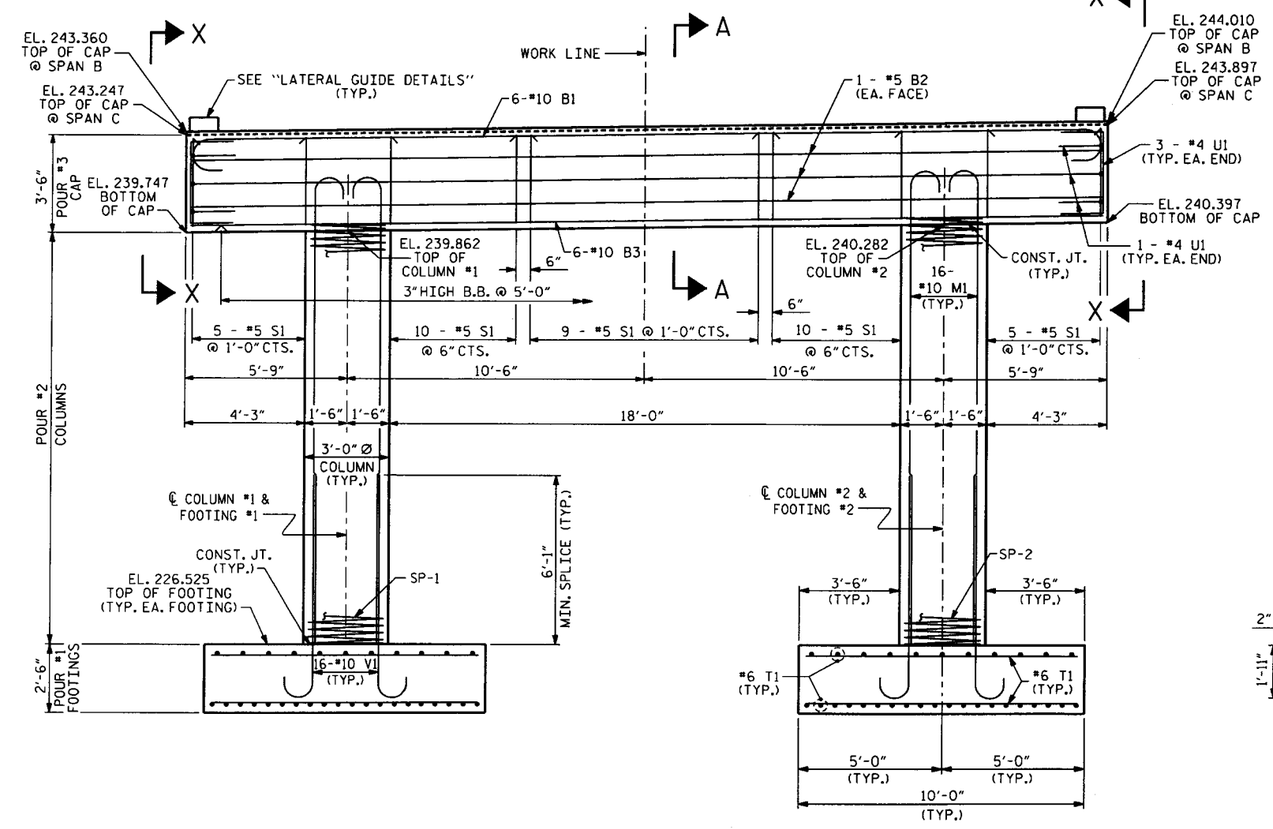

ELEVATION

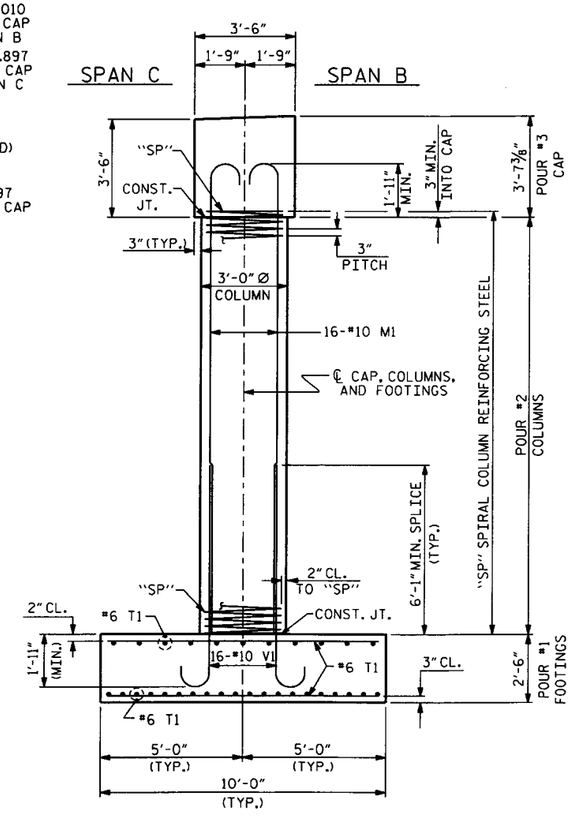

END ELEVATION

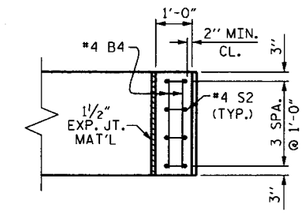

PLAN

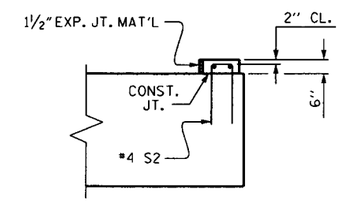

ELEVATION

LATERAL GUIDE DETAILS

WBS NO. 33811.3.1

STANLY COUNTY

STATION: 12+79.09 -L-

REPLACES BRIDGE NO. 57 SHEET 1 OF 2

STATE OF NORTH CAROLINA
DEPARTMENT OF TRANSPORTATION
RALEIGH

SUBSTRUCTURE

BENT #2

27' CLEAR ROADWAY - 90° SKEW

NORTH CAROLINA PROFESSIONAL SEAL 023908 ENGINEER MARK A. AVERETTE 4-28-11

PLANS PREPARED BY:

SIMPSON ENGINEERS & ASSOCIATES
5520 Dillard Drive
Suite 120
Cary, NC 27518
(919) 852-0468
(919) 852-0598 (Fax)
www.simpsonengr.com
LICENSURE NO. C-2521

REVISIONS								SHEET NO.
NO.	BY:	DATE:	NO.	BY:	DATE:			27
1			3					TOTAL SHEETS
2			4					31

DRAWN BY : D.G. VESTER DATE : 2/11
CHECKED BY : M.A. AVERETTE DATE : 2/11

4/28/2011 3:11:31 PM g:\projects\bmu\stanly 57\drawings\B4644_sd_b2a_01.dgn

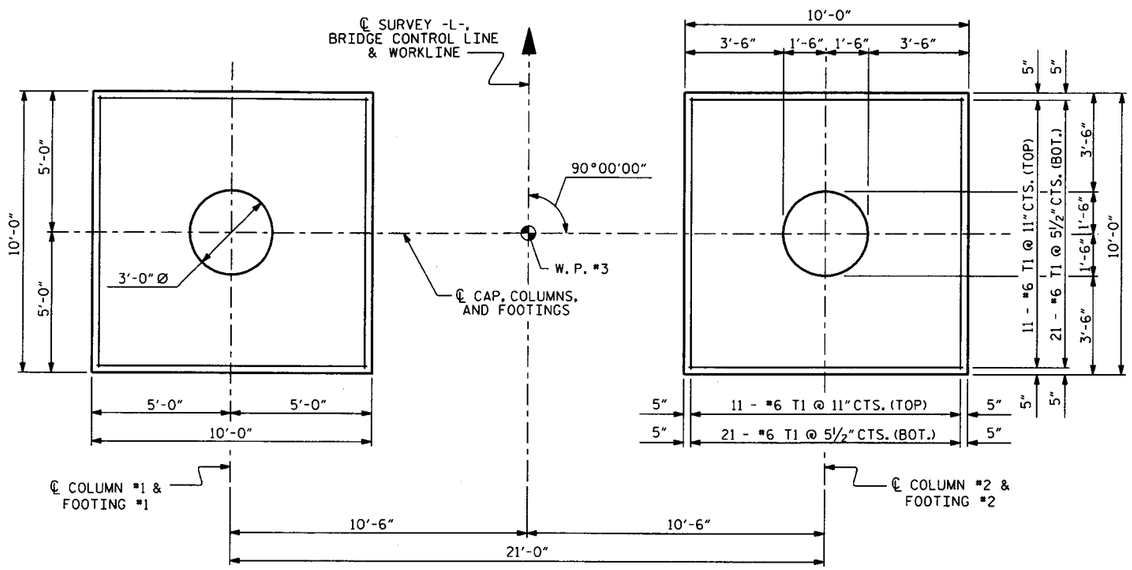

PLAN OF COLUMNS AND FOOTINGS

NOTE: REINFORCING STEEL AND DIMENSIONS ARE TYPICAL FOR EACH FOOTING.

BAR TYPES

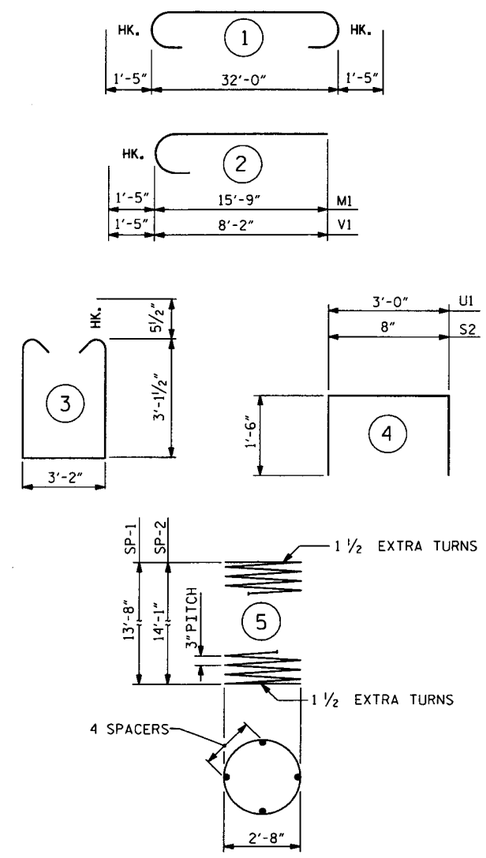

ALL BAR DIMENSIONS ARE OUT TO OUT.

BILL OF MATERIAL

FOR BENT #2

BAR	NO.	SIZE	TYPE	LENGTH	WEIGHT
B1	6	10	1	34'-10"	899
B2	6	5	STR	32'-0"	200
B3	6	10	STR	32'-0"	826
B4	4	4	STR	3'-2"	8
D1	40	6	STR	1'-6"	90
M1	32	10	2	17'-2"	2364
S1	39	5	3	10'-4"	420
S2	8	4	4	3'-8"	20
T1	128	6	STR	9'-6"	1826
U1	12	4	4	6'-0"	48
V1	32	10	2	9'-7"	1320
SP-1	1	**	5	475'-10"	318
SP-2	1	**	5	489'-7"	327

REINFORCING STEEL 8021 LBS.

SPIRAL REINFORCING STEEL 645 LBS.

CLASS "A" CONCRETE BREAKDOWN

POUR #1 (FOOTINGS)	18.5 CU. YDS.
POUR #2 (COLUMNS)	7.1 CU. YDS.
POUR #3 (CAP)	15.1 CU. YDS.
TOTAL	40.7 CU. YDS.

** THE SP-1 AND SP-2 SPIRAL REINFORCING STEEL SHALL BE W20 OR D-20 COLD DRAWN WIRE OR #4 PLAIN OR DEFORMED BAR.

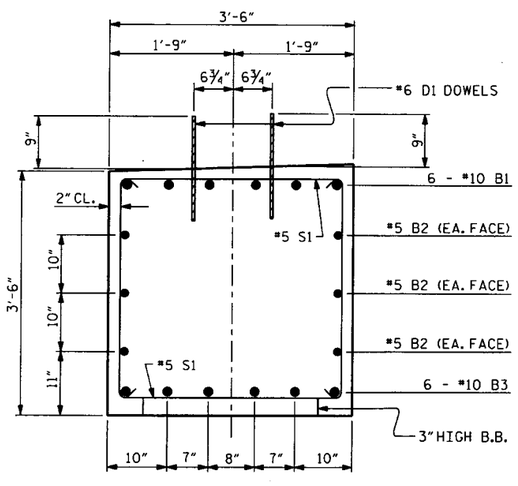

SECTION A-A

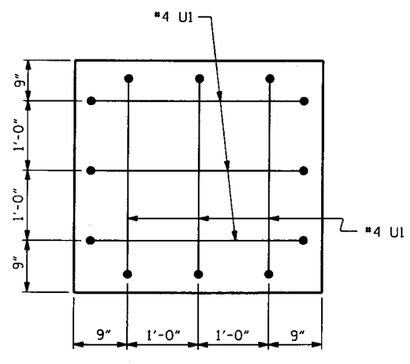

SECTION X-X

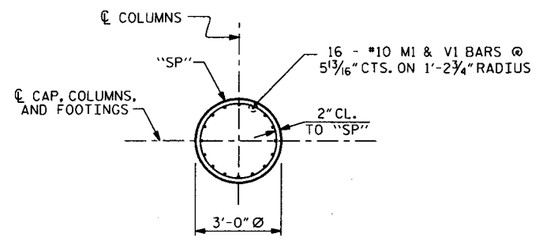

SECTION THRU COLUMN

(TYPICAL FOR ALL COLUMNS)

WBS NO. 33811.3.1

STANLY COUNTY

STATION: 12+79.09 -L-

REPLACES BRIDGE NO. 57 SHEET 2 OF 2

STATE OF NORTH CAROLINA
DEPARTMENT OF TRANSPORTATION
RALEIGH

SUBSTRUCTURE

BENT #2

27' CLEAR ROADWAY - 90° SKEW

NORTH CAROLINA PROFESSIONAL SEAL 023908 ENGINEER MARK A. AVERETTE 4-28-11

PLANS PREPARED BY:

SIMPSON ENGINEERS & ASSOCIATES
5520 Dillard Drive
Suite 120
Cary, NC 27518
(919) 852-0468
(919) 852-0598 (Fax)
www.simpsonengr.com
LICENSURE NO. C-2521

REVISIONS								SHEET NO.
NO.	BY:	DATE:	NO.	BY:	DATE:			28
1			3					TOTAL SHEETS
2			4					31

DRAWN BY : D.G. VESTER DATE : 2/11
CHECKED BY : M.A. AVERETTE DATE : 2/11

4/28/2011 3:11:34 PM g:\projects\bmu\stanly 57\drawings\B4644_sd_b2b_01.dgn

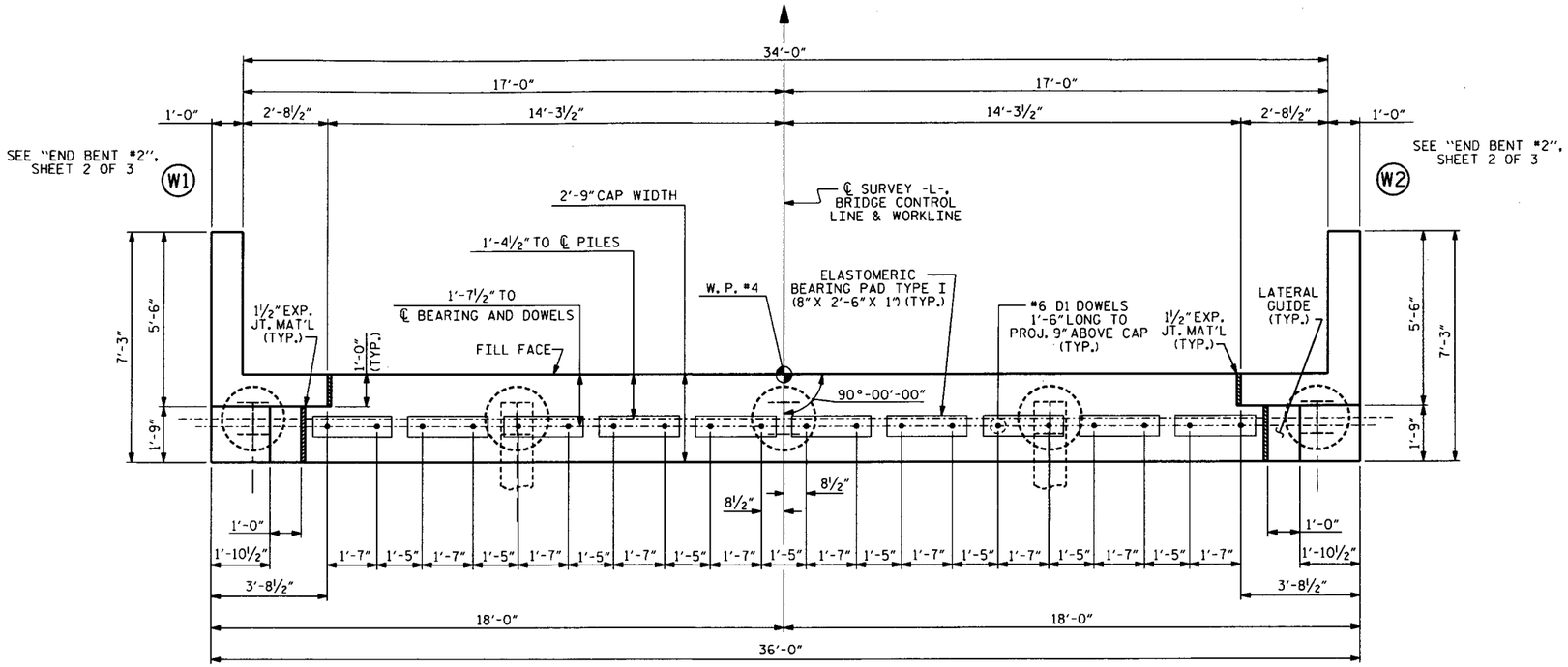

PLAN

NOTES

STIRRUPS IN CAP MAY BE SHIFTED AS NECESSARY TO CLEAR #6 D1 DOWELS.

TOP OF ℄ PILE ELEVATIONS	
PILE	ELEVATION
1	240.985
2	241.152
3	241.319
4	241.485
5	241.652

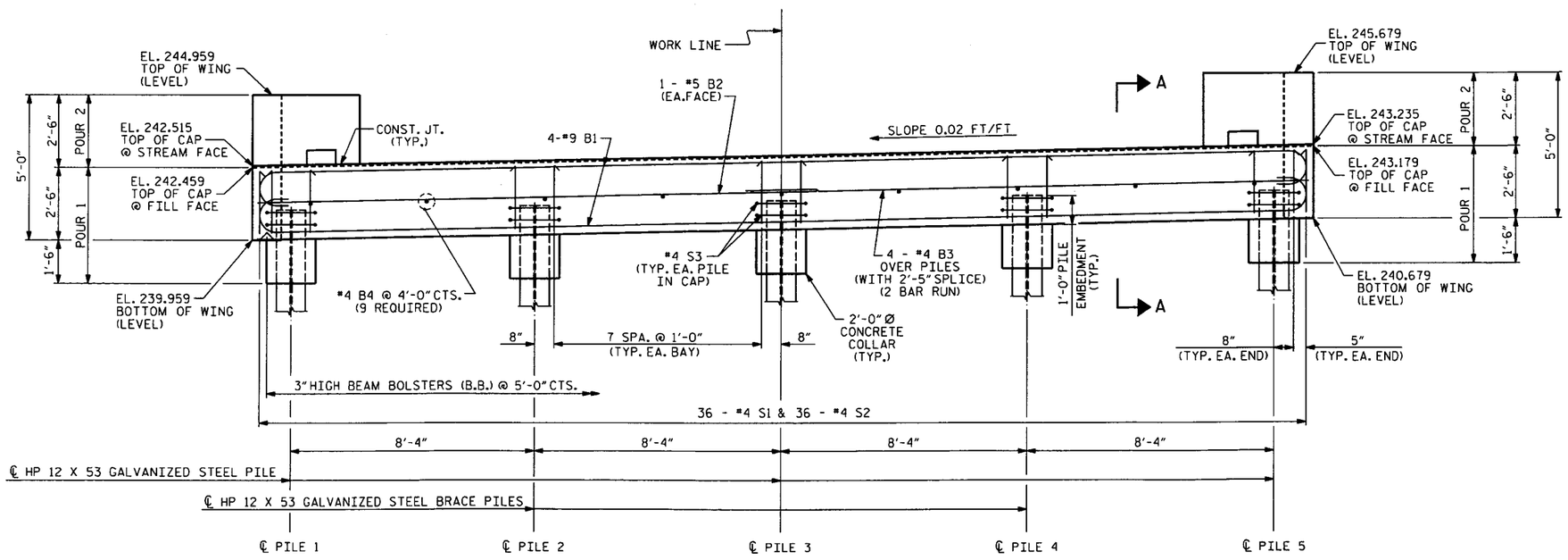

ELEVATION

WBS NO. 33811.3.1

STANLY COUNTY

STATION: 12+79.09 -L-

REPLACES BRIDGE NO. 57 SHEET 1 OF 3

STATE OF NORTH CAROLINA
DEPARTMENT OF TRANSPORTATION
RALEIGH

SUBSTRUCTURE

END BENT #2

27' CLEAR ROADWAY - 90° SKEW

NORTH CAROLINA PROFESSIONAL SEAL 023908 ENGINEER M.A. AVERETTE 4-28-11

PLANS PREPARED BY:

SIMPSON ENGINEERS & ASSOCIATES
5520 Dillard Drive
Suite 120
Cary, NC 27518
(919) 852-0468
(919) 852-0598 (Fax)
www.simpsonengr.com
LICENSURE NO. C-2521

REVISIONS						
NO.	BY:	DATE:	NO.	BY:	DATE:	
1			3			
2			4			

SHEET NO. 29

TOTAL SHEETS 31

DRAWN BY : D.G. VESTER DATE : 2/11
CHECKED BY : M.A. AVERETTE DATE : 2/11

4/28/2011 3:11:36 PM g:\projects\bmu\stanly 57\drawings\B4644_sd_eb2a_01.dgn

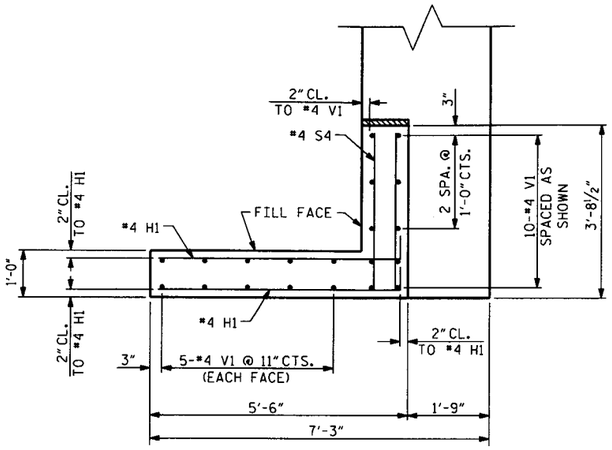

(W1) PLAN OF LEFT WING

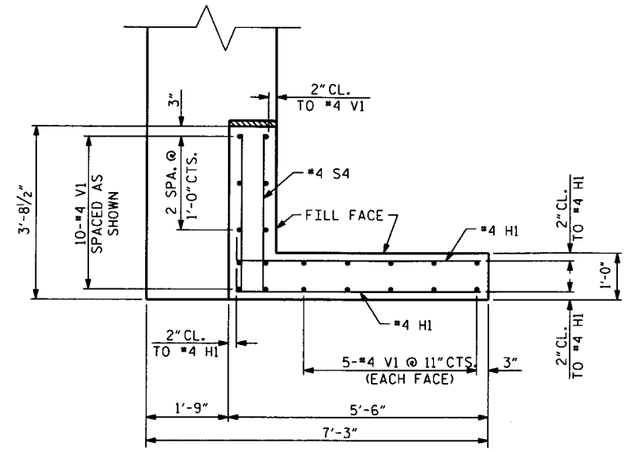

(W2) PLAN OF RIGHT WING

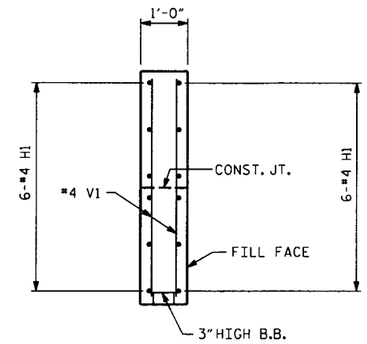

SECTION X-X

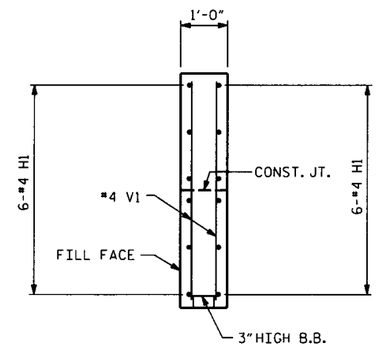

SECTION Y-Y

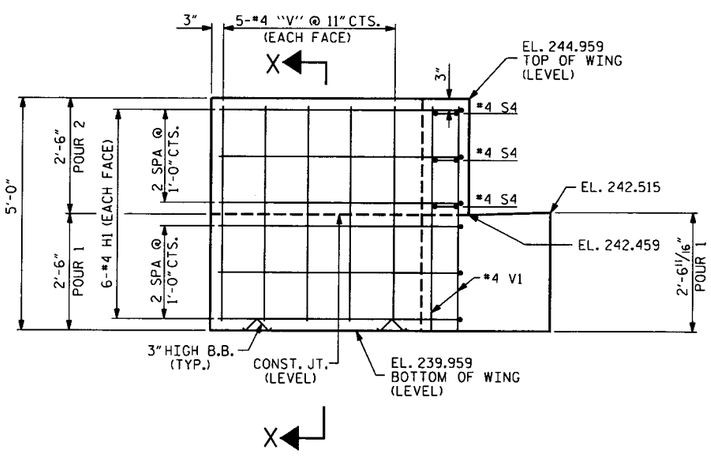

(W1) ELEVATION OF LEFT WING

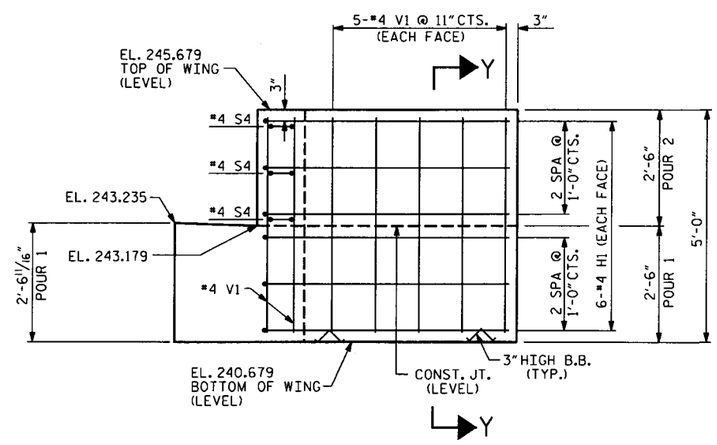

(W2) ELEVATION OF RIGHT WING

WBS NO. 33811.3.1

STANLY COUNTY

STATION: 12+79.09 -L-

REPLACES BRIDGE NO. 57 SHEET 2 OF 3

STATE OF NORTH CAROLINA
DEPARTMENT OF TRANSPORTATION
RALEIGH

SUBSTRUCTURE

END BENT #2

27' CLEAR ROADWAY - 90° SKEW

NORTH CAROLINA PROFESSIONAL SEAL 023908 ENGINEER MARK A. AVERETTE 4-28-11

PLANS PREPARED BY:

SIMPSON ENGINEERS & ASSOCIATES
5520 Dillard Drive
Suite 120
Cary, NC 27518
(919) 852-0468
(919) 852-0598 (Fax)
www.simpsonengr.com
LICENSURE NO. C-2521

REVISIONS						SHEET NO.
NO.	BY:	DATE:	NO.	BY:	DATE:	30
1			3			TOTAL SHEETS
2			4			31

DRAWN BY : D.G. VESTER DATE : 2/11
CHECKED BY : M.A. AVERETTE DATE : 2/11

4/28/2011 3:11:38 PM g:\projects\bmu\stanly 57\drawings\B4644_sd_eb2b_01.dgn

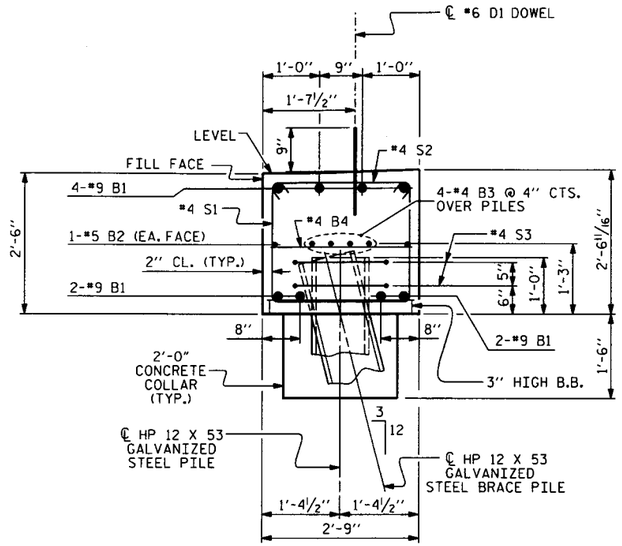

SECTION A-A

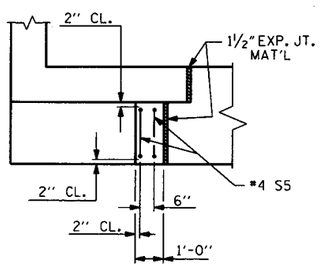

PLAN

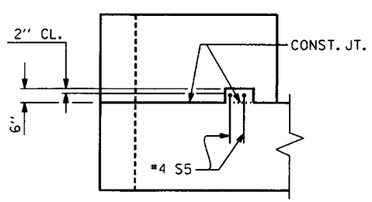

ELEVATION

LATERAL GUIDE DETAILS

BAR TYPES

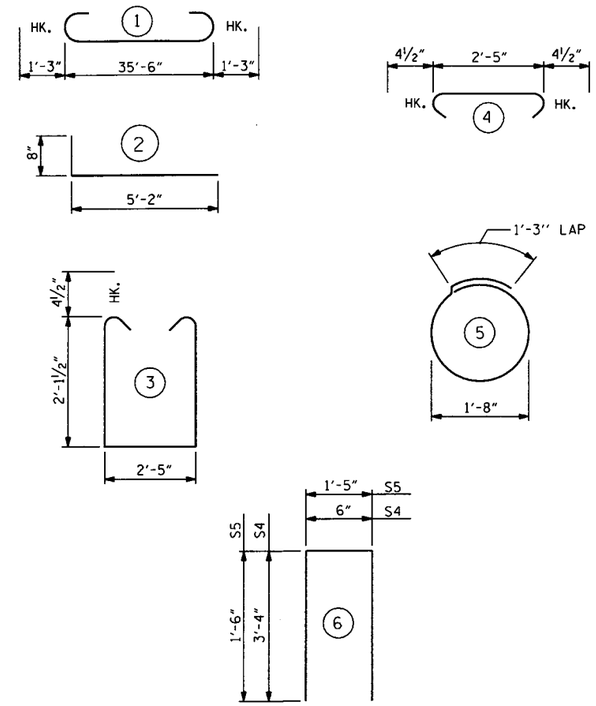

ALL BAR DIMENSIONS ARE OUT TO OUT

BILL OF MATERIAL

END BENT #2

BAR	NO.	SIZE	TYPE	LENGTH	WEIGHT
B1	8	9	1	38'-0"	1034
B2	2	5	STR	35'-6"	74
B3	8	4	STR	19'-0"	102
B4	9	4	STR	2'-5"	15
D1	20	6	STR	1'-6"	45
H1	24	4	2	5'-10"	94
S1	36	4	3	7'-5"	178
S2	36	4	4	3'-2"	76
S3	10	4	5	6'-6"	43
S4	6	4	6	7'-2"	29
S5	4	4	6	4'-5"	12
V1	40	4	STR	4'-8"	125

TOTAL REINFORCING STEEL 1827 LBS.

CLASS "A" CONCRETE BREAKDOWN

POUR #1	10.0 CU. YDS.
POUR #2	1.6 CU. YDS.
TOTAL	11.6 CU. YDS.

HP 12 X 53 GALVANIZED STEEL PILES

5 PILES REQUIRED - LIN. FEET 50.0

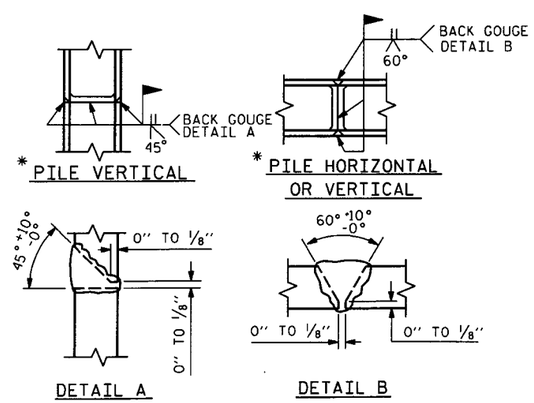

PILE SPLICE DETAILS

* POSITION OF PILE DURING WELDING.

WBS NO. 33811.3.1

STANLY COUNTY

STATION: 12+79.09 -L-

REPLACES BRIDGE NO. 57 SHEET 3 OF 3

STATE OF NORTH CAROLINA
DEPARTMENT OF TRANSPORTATION
RALEIGH

SUBSTRUCTURE

END BENT #2

27' CLEAR ROADWAY - 90° SKEW

NORTH CAROLINA PROFESSIONAL SEAL 023908 ENGINEER MARK A. AVERETTE
4-28-11

PLANS PREPARED BY:

SIMPSON ENGINEERS & ASSOCIATES
5520 Dillard Drive
Suite 120
Cary, NC 27518
(919) 852-0468
(919) 852-0598 (Fax)
www.simpsonengr.com
LICENSURE NO. C-2521

REVISIONS						SHEET NO.
NO.	BY:	DATE:	NO.	BY:	DATE:	31
1			3			TOTAL SHEETS
2			4			31

DRAWN BY : D.G. VESTER DATE : 2/11
CHECKED BY : M.A. AVERETTE DATE : 2/11

4/28/2011 3:11:40 PM g:\projects\bmu\stanly 57\drawings\B4644_sd_eb2c_01.dgn

STANLY #57

EROSION CONTROL PLAN

PROJECT REFERENCE	SHEET NO.
B-4644	EC-1
ROADWAY DESIGN ENGINEER	HYDRAULICS ENGINEER

BRIDGE MAINTENANCE B-4644
BRIDGE # 57 ON 1934 OVER
HARDY CREEK
STANLY COUNTY

VERTICAL SCALE 5' 0 5' 10'
HORIZONTAL SCALE 25' 0 25' 50'

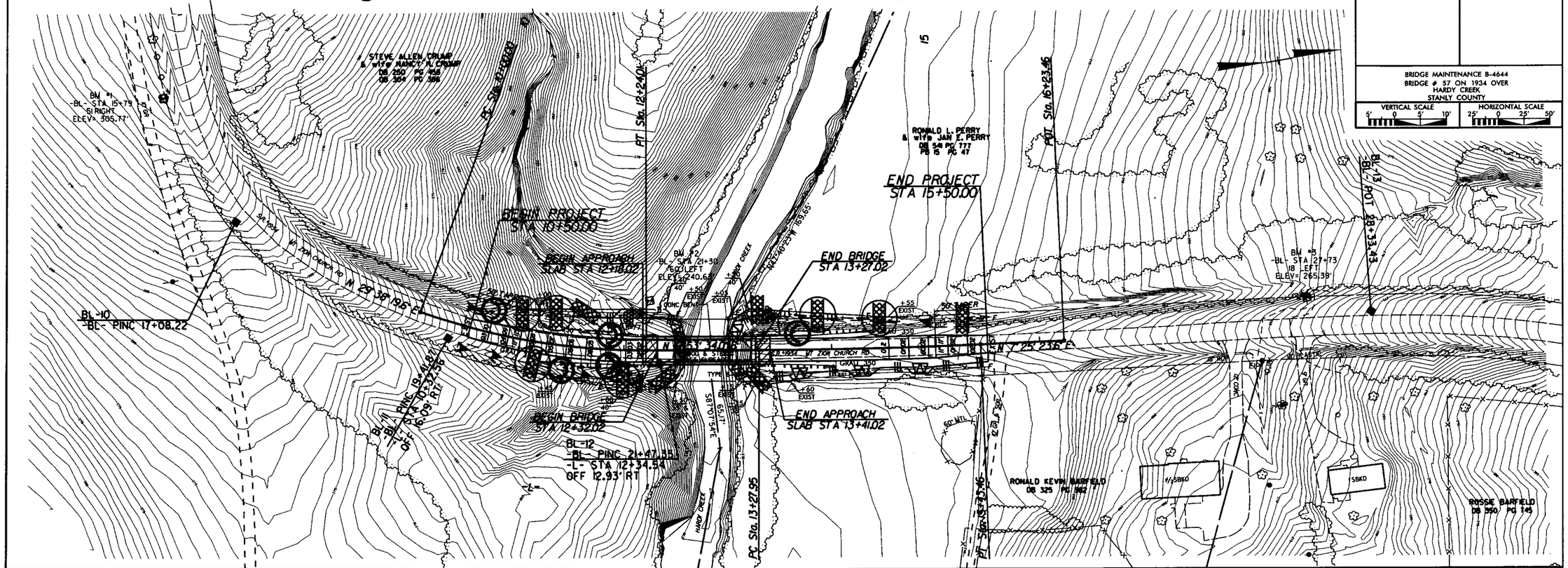

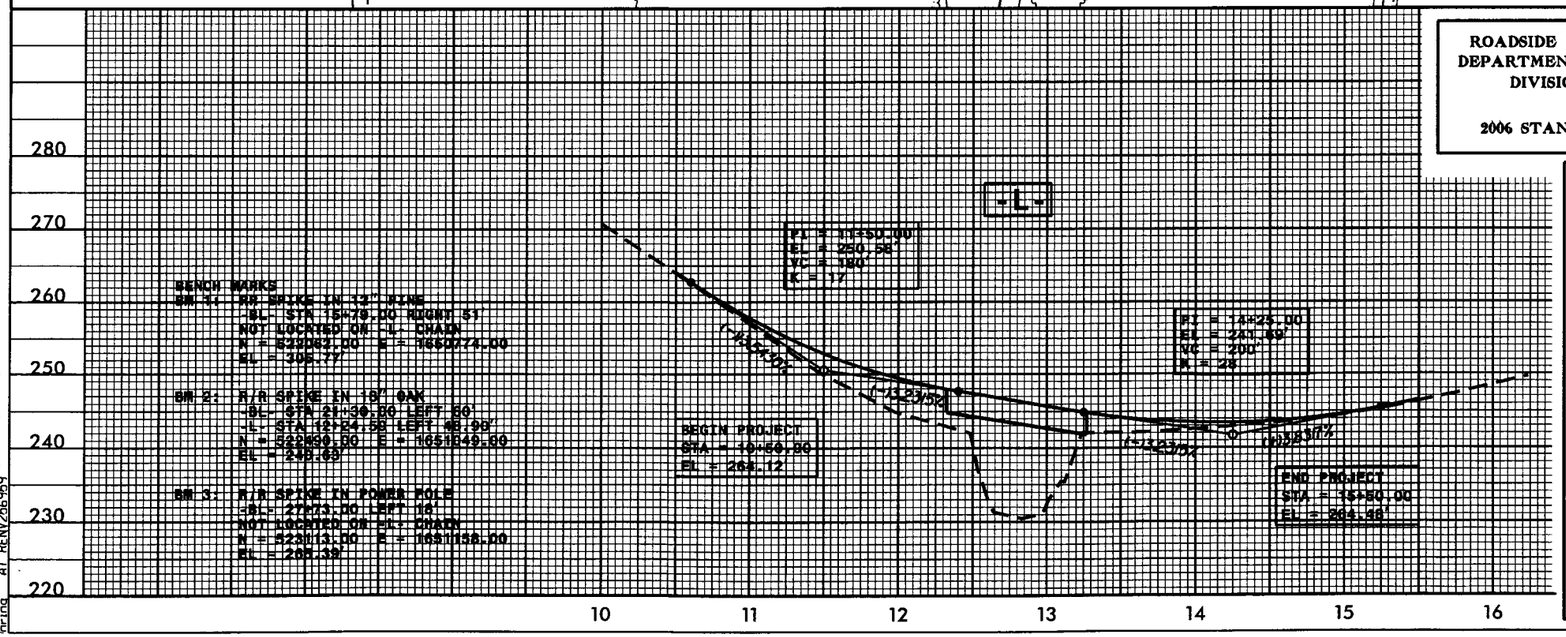

ROADSIDE ENVIRONMENTAL UNIT
DEPARTMENT OF TRANSPORTATION
DIVISION OF HIGHWAYS
RALEIGH, N.C.

2006 STANDARD SPECIFICATIONS

NOTES: ANY DEVIATION FROM OPTIONS GIVEN WILL REQUIRE PRIOR APPROVAL BY ENGINEER.

ADDITIONAL EROSION CONTROL DEVICES MAY NEED TO BE INSTALLED AS DIRECTED BY THE ENGINEER.

Std. #	Description	Symbol
1605.01	Temporary Silt Fence	
1606.01	Special Sediment Control Fence	
1607.01	Gravel Construction Entrance	
1622.01	Temporary Berms and Slope Drains	
1630.05	Temporary Diversion	TD
1630.06	Special Stilling Basin	
1633.01	Temporary Rock Silt Check Type-A	
	Temporary Rock Silt Check Type-A with Matting and Polyacrylamide (PAM)	
	Temporary Rock Silt Check Type-B	
	Wattle with Polyacrylamide (PAM)	

$$DATE$$
22-MAR-2011 15:05
C:\Documents and Settings\rring\Bridge Maint\Older Bridge Maintenance\Stanly #57\B4644_EC.dgn
rring AT REN\26696

PROJECT REFERENCE NO.	SHEET NO.
B-4644	EC-2
R/W SHEET NO.	
ROADWAY DESIGN ENGINEER	HYDRAULICS ENGINEER

TEMPORARY ROCK SILT CHECK TYPE 'B' DETAIL

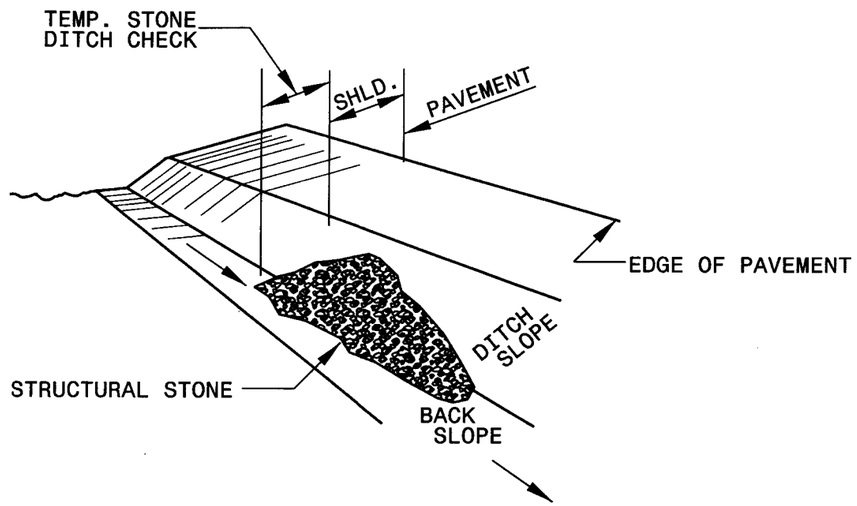

ISOMETRIC VIEW

NOTES:

USE CLASS 'B' EROSION CONTROL STONE FOR STRUCTURAL STONE.

THE ENGINEER MAY DIRECT THE OPTION OF CLASS "A" STONE FOR SITES HAVING LESS THAN ONE (1) ACRE DRAINAGE AREA AND A DITCH GRADE LESS THAN 3%.

ROADSIDE ENVIRONMENTAL UNIT
DEPARTMENT OF TRANSPORTATION
DIVISION OF HIGHWAYS
RALEIGH, N.C.

2006 STANDARD SPECIFICATIONS

NOTES: ANY DEVIATION FROM OPTIONS GIVEN WILL REQUIRE PRIOR APPROVAL BY ENGINEER.

ADDITIONAL EROSION CONTROL DEVICES MAY NEED TO BE INSTALLED AS DIRECTED BY THE ENGINEER.

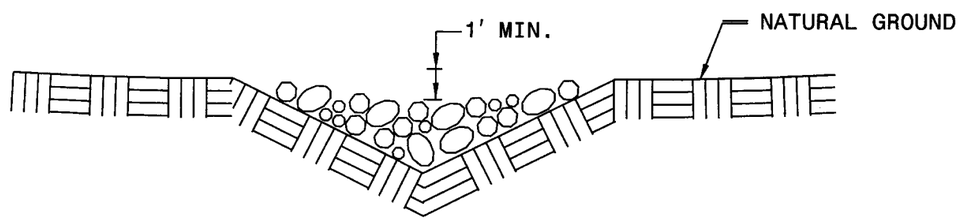

CROSS SECTION
VEE DITCH

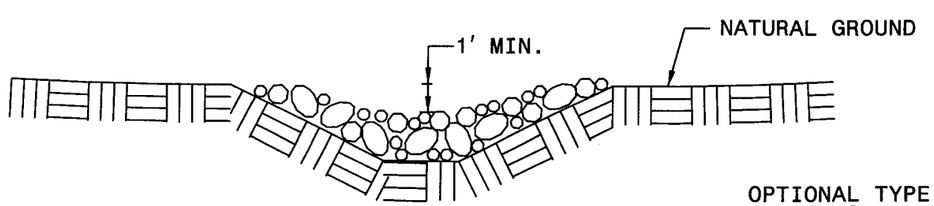

CROSS SECTION
TRAPEZOIDAL DITCH

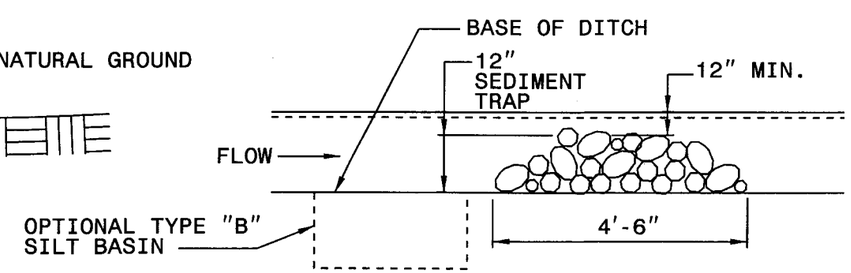

ELEVATION VIEW

PROJECT REFERENCE NO.	SHEET NO.
B-4644	EC-3
R/W SHEET NO.	
ROADWAY DESIGN ENGINEER	HYDRAULICS ENGINEER

WATTLE WITH POLYACRYLAMIDE (PAM) DETAIL

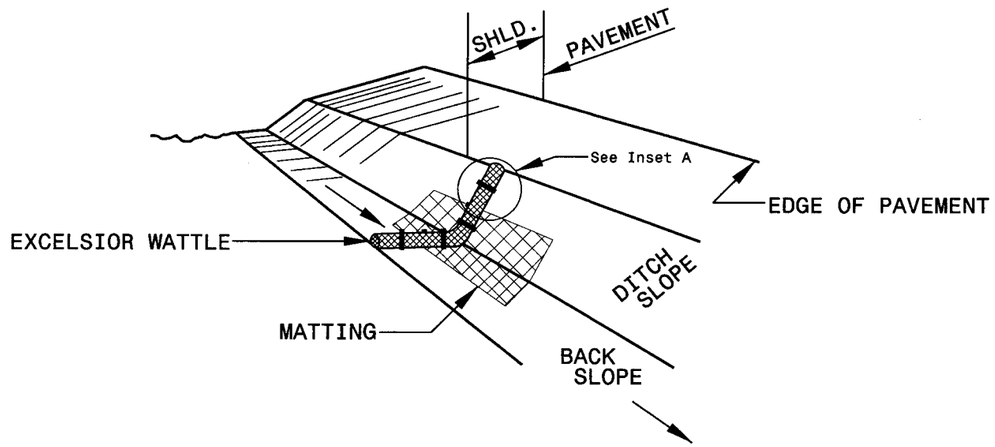

ISOMETRIC VIEW

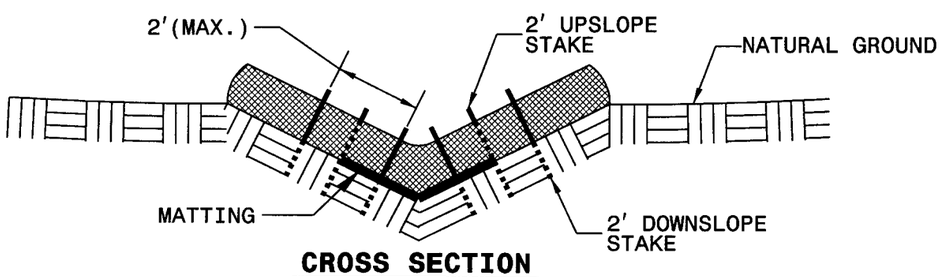

CROSS SECTION VEE DITCH

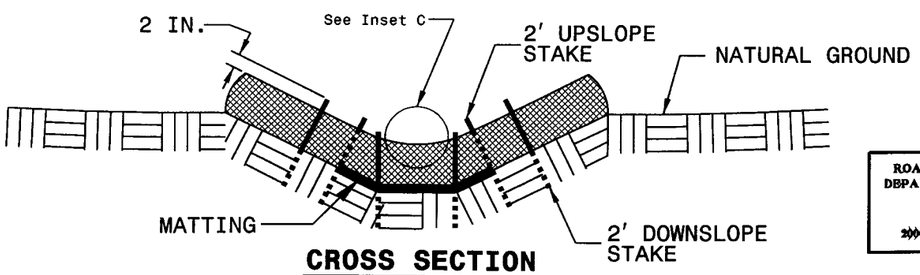

CROSS SECTION TRAPEZOIDAL DITCH

NOTES:

USE MINIMUM 12 IN. DIAMETER EXCELSIOR WATTLE.

USE 2 FT. WOODEN STAKES WITH A 2 IN. BY 2 IN. NOMINAL CROSS SECTION.

ONLY INSTALL WATTLE(S) TO A HEIGHT IN DITCH SO FLOW WILL NOT WASH AROUND WATTLE AND SCOUR DITCH SLOPES AND AS DIRECTED.

INSTALL A MINIMUM OF 2 UPSLOPE STAKES AND 4 DOWNSLOPE STAKES AT AN ANGLE TO WEDGE WATTLE TO BOTTOM OF DITCH.

PROVIDE STAPLES MADE OF 0.125 IN. DIAMETER STEEL WIRE FORMED INTO A U SHAPE NOT LESS THAN 12" IN LENGTH.

INSTALL STAPLES APPROXIMATELY EVERY 1 LINEAR FOOT ON BOTH SIDES OF WATTLE AND AT EACH END TO SECURE IT TO THE SOIL.

INSTALL MATTING IN ACCORDANCE WITH SECTION 1631 OF THE STANDARD SPECIFICATIONS.

PRIOR TO POLYACRYLAMIDE (PAM) APPLICATION, OBTAIN A SOIL SAMPLE FROM PROJECT LOCATION, AND FROM OFFSITE MATERIAL, AND ANALYZE FOR APPROPRIATE PAM FLOCCULANT TO BE APPLIED TO EACH WATTLE.

INITIALLY APPLY 2 OUNCES OF ANIONIC OR NEUTRALLY CHARGED PAM OVER WATTLE WHERE WATER WILL FLOW AND 1 OUNCE OF PAM ON MATTING ON EACH SIDE OF WATTLE. REAPPLY PAM AFTER EVERY RAINFALL EVENT THAT IS EQUAL TO OR EXCEEDS 0.50 IN.

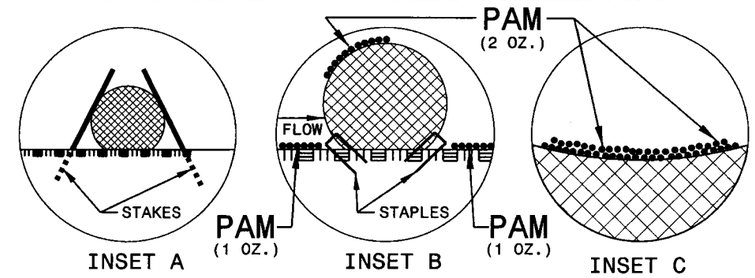

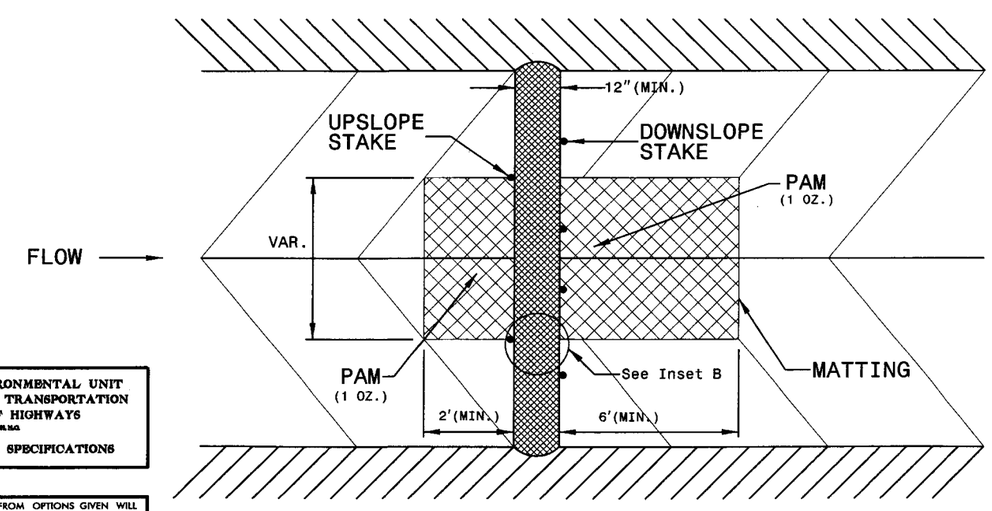

TOP VIEW

ROADSIDE ENVIRONMENTAL UNIT
DEPARTMENT OF TRANSPORTATION
DIVISION OF HIGHWAYS
RALEIGH, N.C.

2006 STANDARD SPECIFICATIONS

NOTES: ANY DEVIATION FROM OPTIONS GIVEN WILL REQUIRE PRIOR APPROVAL BY ENGINEER.

ADDITIONAL EROSION CONTROL DEVICES MAY NEED TO BE INSTALLED AS DIRECTED BY THE ENGINEER.

PROJECT REFERENCE NO.	SHEET NO.
B-4644	EC-4
R/W SHEET NO.	
ROADWAY DESIGN ENGINEER	HYDRAULICS ENGINEER

TEMPORARY ROCK SILT CHECK TYPE 'A' WITH EXCELSIOR MATTING AND POLYACRYLAMIDE (PAM)

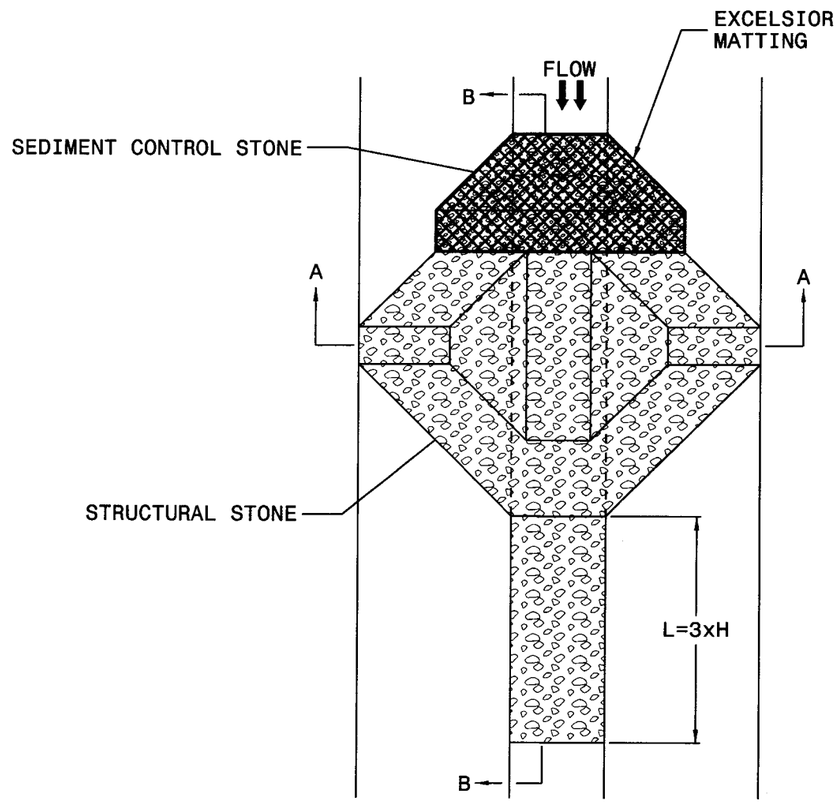

PLAN

NOTES

USE EXCELSIOR FOR MATTING MATERIAL AND ANCHOR MATTING SECTION AT TOP AND BOTTOM WITH CLASS B STONE.

PRIOR TO POLYACRYLAMIDE (PAM) APPLICATION, OBTAIN A SOIL SAMPLE FROM PROJECT LOCATION, AND FROM OFFSITE MATERIAL, AND ANALYZE FOR APPROPRIATE PAM FLOCCULANT TO BE APPLIED TO EACH ROCK SILT CHECK.

INITIALLY APPLY 3.5 OUNCES OF POLYACRYLAMIDE (PAM) TO TOP OF MATTING SECTION AND AFTER EVERY RAINFALL EVENT THAT EQUALS OR EXCEEDS 0.50 INCHES.

ROADSIDE ENVIRONMENTAL UNIT
DEPARTMENT OF TRANSPORTATION
DIVISION OF HIGHWAYS
RALEIGH, N.C.

2006 STANDARD SPECIFICATIONS

NOTES: ANY DEVIATION FROM OPTIONS GIVEN WILL REQUIRE PRIOR APPROVAL BY ENGINEER.

ADDITIONAL EROSION CONTROL DEVICES MAY NEED TO BE INSTALLED AS DIRECTED BY THE ENGINEER.

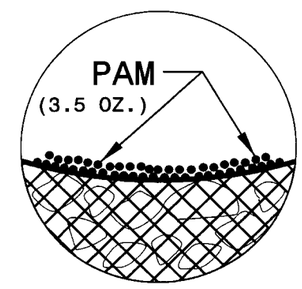

INSET A

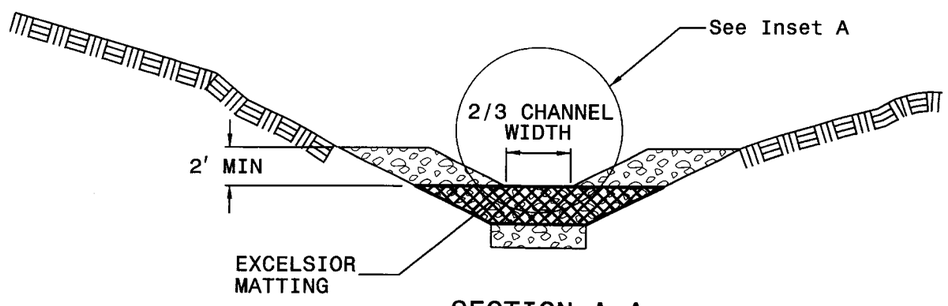

SECTION A-A

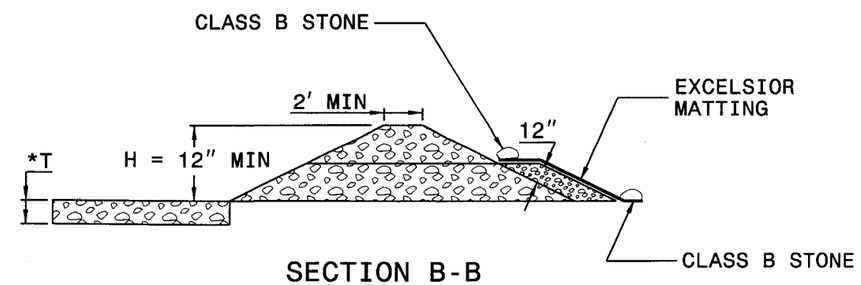

SECTION B-B

*T = 12" MIN., 18" MAX.

NOT TO SCALE

PROJECT REFERENCE NO.	SHEET NO.
B-4644	EC-5
R/W SHEET NO.	
ROADWAY DESIGN ENGINEER	HYDRAULICS ENGINEER

MATTING INSTALLATION DETAIL

ROADSIDE ENVIRONMENTAL UNIT
DEPARTMENT OF TRANSPORTATION
DIVISION OF HIGHWAYS
RALEIGH, N.C.

2006 STANDARD SPECIFICATIONS

NOTES: ANY DEVIATION FROM OPTIONS GIVEN WILL REQUIRE PRIOR APPROVAL BY ENGINEER.

ADDITIONAL EROSION CONTROL DEVICES MAY NEED TO BE INSTALLED AS DIRECTED BY THE ENGINEER.

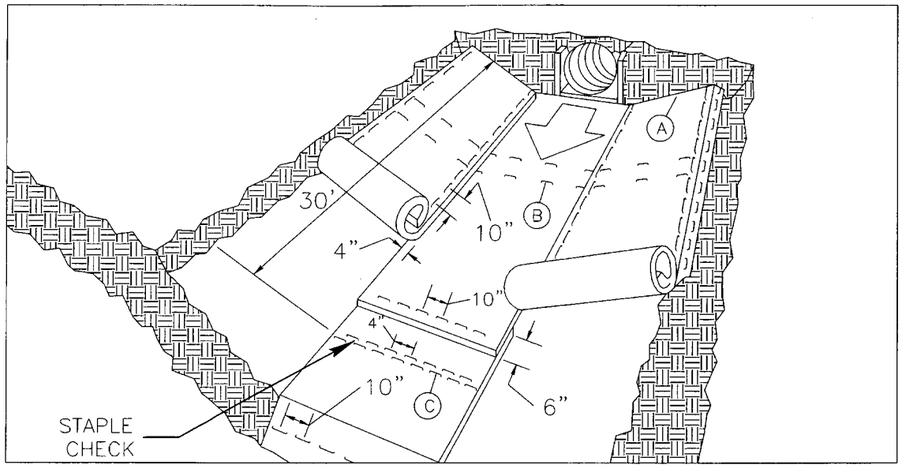

MATTING IN DITCHES

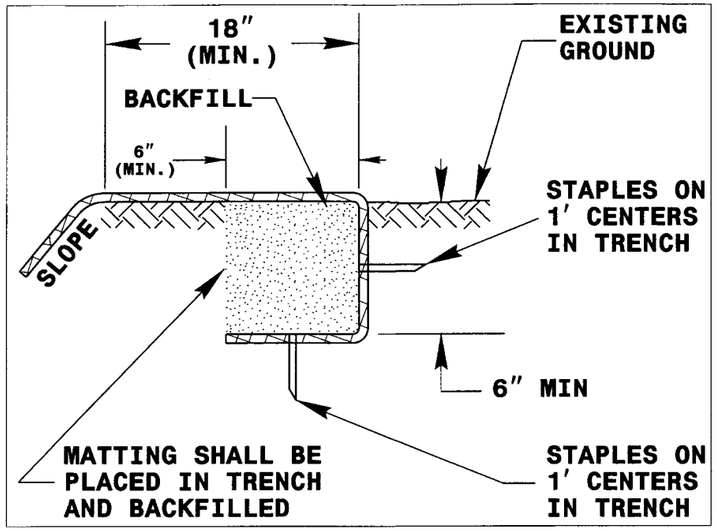

DIAGRAM (A)

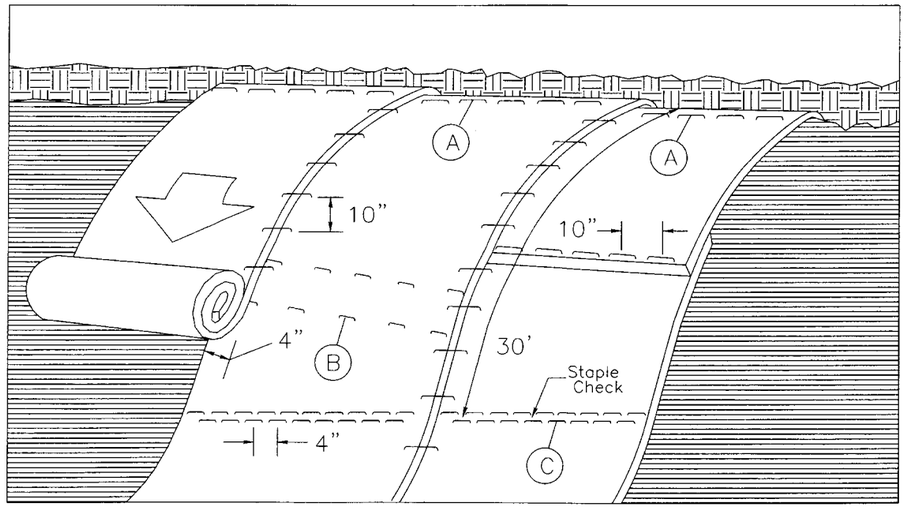

MATTING ON SLOPES

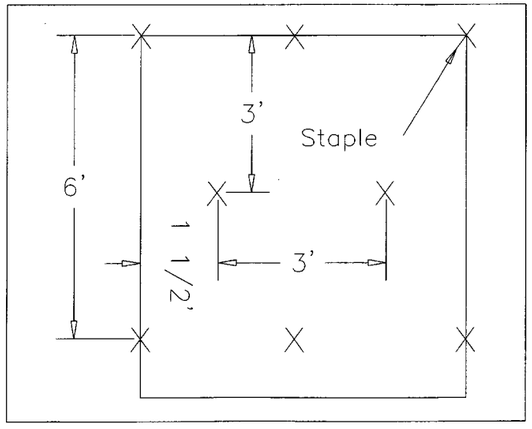

DIAGRAM (B)

Staple Check Pattern

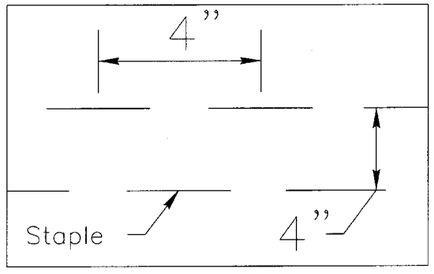

DIAGRAM (C)

NOTES:

THIS DETAIL APPLIES TO STRAW, EXCELSIOR, AND PERMANENT SOIL REINFORCEMENT MAT (PSRM) INSTALLATION.

STAPLES SHALL BE NO. 11 GAUGE STEEL WIRE FORMED INTO A "U" SHAPE WITH A MINIMUM THROAT WIDTH OF 1 INCH AND NOT LESS THAN 6 INCHES IN LENGTH.

NOT TO SCALE