CONTRACT NO.: DO00121 TIP: B-4232

STATE	STATE PROJECT REFERENCE NO.	SHEET NO.	TOTAL SHEETS
N.C.	B-4232	1	

STATE PROJECT NO.	F. A. PROJ. NO.	DESCRIPTION
33575.1.1	BRSTP-903(3)	P.E.
33575.2.1	BRSTP-903(3)	R/W
33575.3.1	BRSTP-903(3)	CONSTRUCTION

STATE OF NORTH CAROLINA
DIVISION OF HIGHWAYS

PITT COUNTY

LOCATION: NC 903 BRIDGE NO. 9 OVER SWIFT CREEK

TYPE OF WORK: BRIDGE REPLACEMENT WITH PRESTRESSED CONCRETE CORED SLAB SUPERSTRUCTURE ON STEEL PILE END BENTS AND ROADWAY APPROACHES

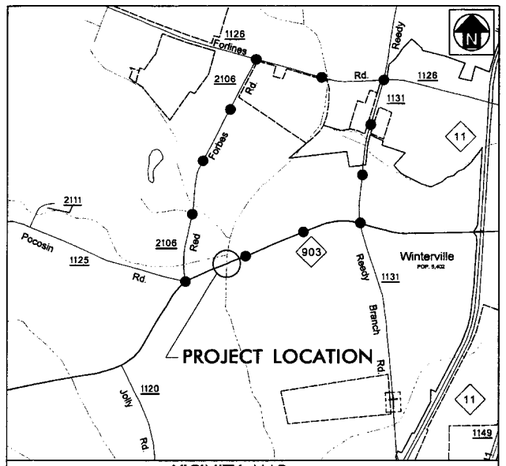

VICINITY MAP
(NOT TO SCALE)
OFFSITE DETOUR

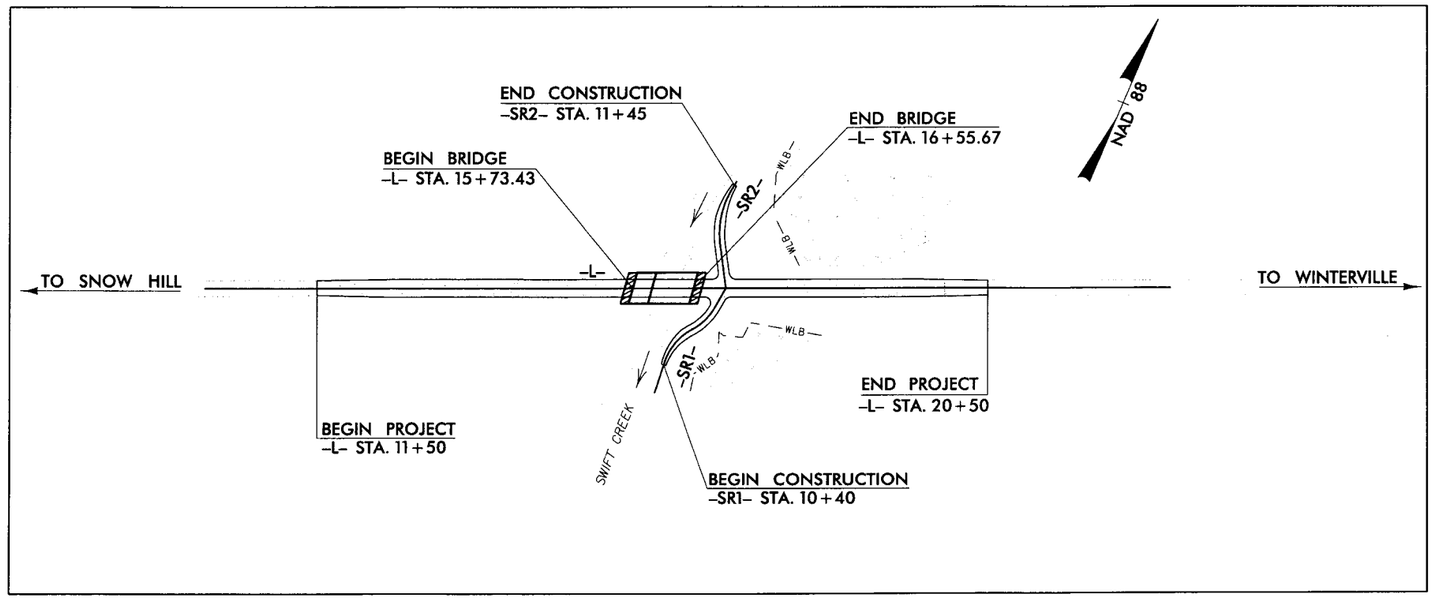

LOCATION SKETCH

STATE OF NORTH CAROLINA DEPARTMENT OF TRANSPORTATION

DESIGN DATA

ADT 2005 = 4200

ADT 2025 = 7800

V = 60 MPH

PROJECT LENGTH

LENGTH ROADWAY TIP PROJECT = 0.204 MILE

LENGTH STRUCTURE TIP PROJECT = 0.015 MILE

TOTAL LENGTH TIP PROJECT = 0.219 MILE

BRIDGE MANAGEMENT UNIT

NORTH CAROLINA DEPARTMENT OF TRANSPORTATION

2006 STANDARD SPECIFICATIONS

LETTING DATE:
MAY 31, 2011

DAN HOLDERMAN, PE
STATE BRIDGE MANAGEMENT ENGINEER

NCDOT CONTACT:

MIKE SUMMERS
BRIDGE MANAGEMENT PROJECT MANAGER

NORTH CAROLINA PROFESSIONAL SEAL 19831 ENGINEER DAVID B. SIMPSON, JR.
4-28-11

DAVID B. SIMPSON, JR., PE
DESIGN ENGINEER
Simpson Engineers C-2521

Prepared In the Office of:

SIMPSON ENGINEERS & ASSOCIATES
5520 Dillard Drive
Suite 120
Cary, NC 27518
(919) 852-0468
(919) 852-0598 (Fax)
www.simpsonengr.com

GIBSON ENGINEERS, PC
PO Box 700
Fuquay-Varina, NC 27526
(919) 552-2253
(919) 552-2254 (Fax)
www.gibsonengineers.com

4/28/2011
2:02:18 PM
R:\Roadway\Proj\b4232_rdy_tsh.dgn
ph56855

TIP: B-4232

PITT COUNTY (BRIDGE #9)

EXISTING BRIDGE #9
24'-0" CLEAR ROADWAY
SPANS: 1 @ 17'-5", 1 @ 17'-0" & 1 @ 17'-8"
REINFORCED CONCRETE FLOOR ON TIMBER JOISTS
ABUTMENTS & INTERIOR BENTS: TIMBER CAPS ON TIMBER PILES

BM #1:
RAILROAD SPIKE IN 18" TWIN HARDWOOD
141.22' RT. OF STA. 15+56.36 -L-
ELEV. = 51.27'

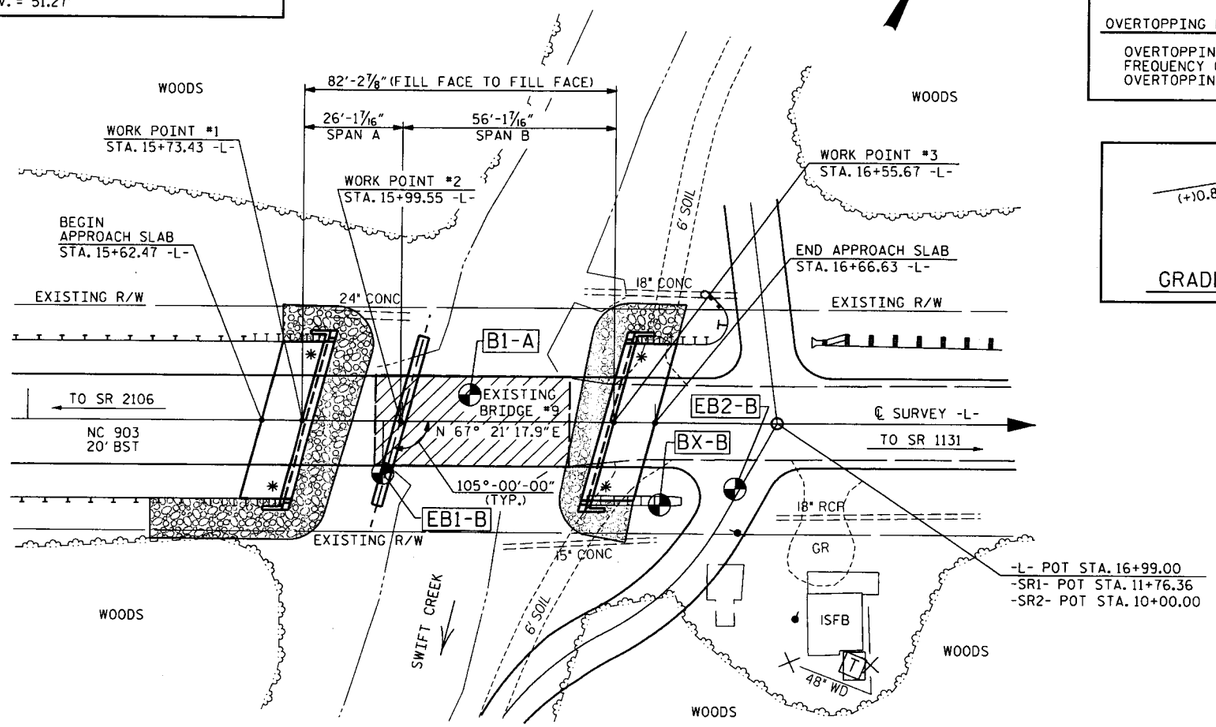

PLAN

SCALE : 1" = 20'

DENOTES GEO-TECH BORE HOLE LOCATIONS.

* DENOTES GUARDRAIL CONNECTION REQ'D., SEE "GUARDRAIL ANCHOR UNIT" SHEET.

HYDROGRAPHIC DATA:

DESIGN DISCHARGE -	1500 CFS
FREQUENCY OF DESIGN FLOOD -	50 YEAR
DESIGN HIGH WATER ELEVATION -	51.0
DRAINAGE AREA -	11.3 SQ. MI.
BASIC DISCHARGE (Q 100) -	1850 CFS
BASIC HIGH WATER ELEVATION -	51.6

OVERTOPPING FLOOD DATA:

OVERTOPPING DISCHARGE -	1815 CFS
FREQUENCY OF OVERTOPPING FLOOD -	50 YEAR
OVERTOPPING FLOOD ELEVATION -	52.2

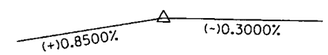

PVI STA. 14+50.00
ELEV. 54.62'
VC = 200'

GRADE DATA -L- (NC 903)

NOTES

FOR EROSION CONTROL MEASURES, SEE EROSION CONTROL PLANS.

REMOVAL OF THE EXISTING BRIDGE SHALL BE PERFORMED SO AS NOT TO ALLOW DEBRIS TO FALL INTO THE WATER. THE CONTRACTOR SHALL REMOVE THE BRIDGE AND SUBMIT PLANS FOR THE DEMOLITION IN ACCORDANCE WITH ARTICLE 402-2 OF THE STANDARD SPECIFICATIONS.

THE SUBSTRUCTURE OF THE EXISTING BRIDGE INDICATED ON THE PLANS IS FROM THE BEST INFORMATION AVAILABLE. SINCE THIS INFORMATION IS SHOWN FOR THE CONVENIENCE OF THE CONTRACTOR, THE CONTRACTOR SHALL HAVE NO CLAIM WHATSOEVER AGAINST THE DEPARTMENT OF TRANSPORTATION FOR ANY DELAYS OR ADDITIONAL COST INCURRED BASED ON DIFFERENCES BETWEEN THE EXISTING BRIDGE SUBSTRUCTURE SHOWN ON THE PLANS AND THE ACTUAL CONDITIONS AT THE PROJECT SITE.

THIS STRUCTURE HAS BEEN DESIGNED IN ACCORDANCE WITH HEC 18, "EVALUATING SCOUR AT BRIDGES", NOVEMBER 1995.

THIS BRIDGE HAS BEEN DESIGNED IN ACCORDANCE WITH THE REQUIREMENTS OF THE AASHTO LRFD BRIDGE DESIGN SPECIFICATIONS FOR SEISMIC PERFORMANCE ZONE 1.

IN AS MUCH AS THE PAINT SYSTEM ON THE EXISTING STRUCTURAL STEEL CONTAINS LEAD, THE CONTRACTOR'S ATTENTION IS DIRECTED TO ARTICLE 107-1, OF THE STANDARD SPECIFICATIONS. ANY COSTS RESULTING FROM COMPLIANCE WITH APPLICABLE STATE OR FEDERAL REGULATIONS PERTAINING TO HANDLING OF MATERIALS CONTAINING LEAD BASED PAINT SHALL BE INCLUDED IN THE BID PRICE FOR "REMOVAL OF EXISTING STRUCTURE AT STATION 16+14.55".

DRIVE PILES AT END BENT #1 AND END BENT #2 TO A REQUIRED BEARING CAPACITY OF 90 TONS PER PILE. THE REQUIRED BEARING CAPACITY IS EQUAL TO THE ALLOWABLE BEARING CAPACITY WITH A MINIMUM FACTOR OF SAFETY OF TWO.

THE ALLOWABLE BEARING CAPACITY FOR PILES AT END BENT #1 AND END BENT #2 IS 45 TONS PER PILE.

DRIVE PILES AT BENT #1 TO A REQUIRED BEARING CAPACITY OF 95 TONS PER PILE. THE REQUIRED BEARING CAPACITY IS EQUAL TO THE ALLOWABLE BEARING CAPACITY WITH A MINIMUM FACTOR OF SAFETY OF TWO PLUS ANY ADDITIONAL CAPACITY TO ACCOUNT FOR DOWN DRAG OR NEGATIVE SKIN FRICTION AND SCOUR.

THE ALLOWABLE BEARING CAPACITY FOR PILES AT BENT #1 IS 45 TONS PER PILE.

DRIVE PILES AT BENT #1 TO A TIP ELEVATION NO HIGHER THAN 0.0 FEET.

THE SCOUR CRITICAL ELEVATION FOR BENT #1 IS ELEVATION 30.0 FEET. SCOUR CRITIBAL ELEVATIONS ARE USED TO MONITOR POSSIBLE SCOUR PROBLEMS DURING THE LIFE OF THE STRUCTURE.

TESTING PILES WITH THE PILE DRIVING ANALYZER FOR LRFD MAY BE REQUIRED FOR PILES AT END BENT #1, BENT #1, OR END BENT #2. SEE PILE DRIVING ANALYZER FOR LRFD SPECIAL PROVISION.

THIS STRUCTURE HAS BEEN DESIGNED IN ACCORDANCE WITH FHWA'S TECHNICAL ADVISORY T5140.20 (SCOUR AT BRIDGES).

FOR INTERIOR BENT 1, ONLY PARTIAL GALVANIZING OF THE PILES IS REQUIRED. SEE INTERIOR BENT SHEETS FOR DETAILS.

THE QUANTITY OF RIP RAP TO BE PAID FOR WILL BE THE ACTUAL NUMBER OF TONS OF EACH CLASS OF RIP RAP WHICH HAS BEEN INCORPORATED INTO THE COMPLETED AND ACCEPTED WORK. THE RIP RAP WILL BE MEASURED BY BEING WEIGHED IN TRUCKS ON CERTIFIED PLATFORM SCALES OR OTHER CERTIFIED WEIGHING DEVICES. THE QUANTITY OF RIP RAP WILL BE PAID FOR AT THE CONTRACT UNIT PRICE PER TON:

PLAIN RIP RAP CLASS II (2'-0" THICK) & FILTER FABRIC

END BENT #1	140 TONS &	125 SY FILTER FABRIC
END BENT #2	85 TONS &	75 SY FILTER FABRIC
TOTAL	225 TONS &	200 SY FILTER FABRIC

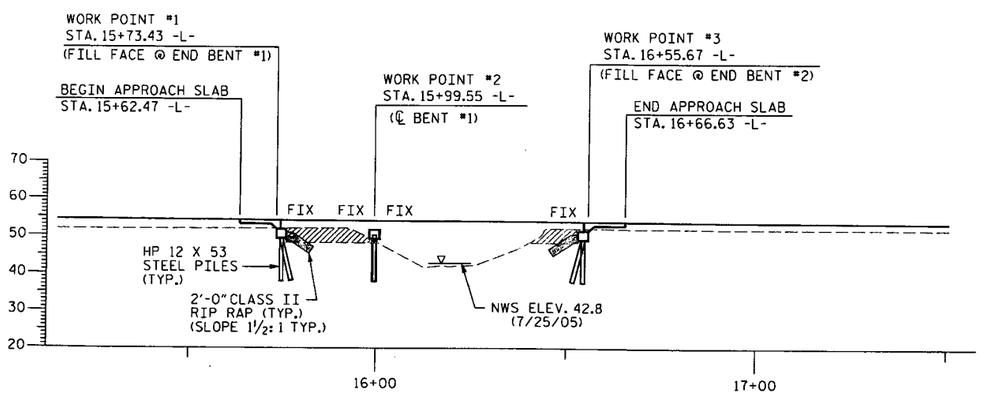

PROFILE ALONG ℄ SURVEY

SCALE : 1" = 20'

WBS NO. 33575.3.1

PITT COUNTY

STATION: 16+14.55 -L-

REPLACES BRIDGE NO. 9

NORTH CAROLINA PROFESSIONAL SEAL 023908 ENGINEER MARK A. AVERETTE 4-28-11

PLANS PREPARED BY:

SIMPSON ENGINEERS & ASSOCIATES

5520 Dillard Drive
Suite 120
Cary, NC 27518
(919) 852-0468
(919) 852-0598 (Fax)
www.simpsonengr.com

LICENSURE NO. C-2521

STATE OF NORTH CAROLINA
DEPARTMENT OF TRANSPORTATION
RALEIGH

GENERAL DRAWING

(BRIDGE ON NC 903 OVER SWIFT CREEK)

42' CLEAR ROADWAY-105° SKEW

REVISIONS							
NO.	BY:	DATE:	NO.	BY:	DATE:	SHEET NO.	2
1			3			TOTAL SHEETS	32
2			4				

DRAWN BY : R. SEALEY DATE : 6-08
CHECKED BY : M. AVERETTE DATE : 6-08

4/28/2011 2:29:42 PM g:\projects\bmu\pitt 9\drawings\B4232_sd_gd_01-V8.dgn

PROJECT REFERENCE	SHEET NO.
B-4232	3

Note: Not to Scale

**S.U.E. = Subsurface Utility Engineering*

STATE OF NORTH CAROLINA
DIVISION OF HIGHWAYS

CONVENTIONAL PLAN SHEET SYMBOLS

BOUNDARIES AND PROPERTY:

- State Line
- County Line
- Township Line
- City Line
- Reservation Line
- Property Line
- Existing Iron Pin — IP
- Property Corner
- Property Monument — CM
- Parcel/Sequence Number — 123
- Existing Fence Line
- Proposed Woven Wire Fence
- Proposed Chain Link Fence
- Proposed Barbed Wire Fence
- Existing Wetland Boundary — WLB
- Proposed Wetland Boundary — WLB
- Existing Endangered Animal Boundary — EAB
- Existing Endangered Plant Boundary — EPB

BUILDINGS AND OTHER CULTURE:

- Gas Pump Vent or U/G Tank Cap
- Sign — S
- Well — W
- Small Mine
- Foundation
- Area Outline
- Cemetery
- Building
- School
- Church
- Dam

HYDROLOGY:

- Stream or Body of Water
- Hydro, Pool or Reservoir
- Jurisdictional Stream — JS
- Buffer Zone 1 — BZ 1
- Buffer Zone 2 — BZ 2
- Flow Arrow
- Disappearing Stream
- Spring
- Wetland
- Proposed Lateral, Tail, Head Ditch — FLOW
- False Sump

RAILROADS:

- Standard Gauge — CSX TRANSPORTATION
- RR Signal Milepost — MILEPOST 35
- Switch — SWITCH
- RR Abandoned
- RR Dismantled

RIGHT OF WAY:

- Baseline Control Point
- Existing Right of Way Marker
- Existing Right of Way Line
- Proposed Right of Way Line
- Proposed Right of Way Line with Iron Pin and Cap Marker
- Proposed Right of Way Line with Concrete or Granite Marker
- Existing Control of Access
- Proposed Control of Access
- Existing Easement Line — E
- Proposed Temporary Construction Easement — E
- Proposed Temporary Drainage Easement — TDE
- Proposed Permanent Drainage Easement — PDE
- Proposed Permanent Utility Easement — PUE

ROADS AND RELATED FEATURES:

- Existing Edge of Pavement
- Existing Curb
- Proposed Slope Stakes Cut — C
- Proposed Slope Stakes Fill — F
- Proposed Wheel Chair Ramp — WCR
- Existing Metal Guardrail
- Proposed Guardrail
- Existing Cable Guiderail
- Proposed Cable Guiderail
- Equality Symbol
- Pavement Removal

VEGETATION:

- Single Tree
- Single Shrub
- Hedge
- Woods Line
- Orchard
- Vineyard — Vineyard

EXISTING STRUCTURES:

MAJOR:

- Bridge, Tunnel or Box Culvert — CONC
- Bridge Wing Wall, Head Wall and End Wall — CONC WW

MINOR:

- Head and End Wall — CONC HW
- Pipe Culvert
- Footbridge
- Drainage Box: Catch Basin, DI or JB — CB
- Paved Ditch Gutter
- Storm Sewer Manhole — S
- Storm Sewer — S

UTILITIES:

POWER:

- Existing Power Pole
- Proposed Power Pole
- Existing Joint Use Pole
- Proposed Joint Use Pole
- Power Manhole — P
- Power Line Tower
- Power Transformer
- U/G Power Cable Hand Hole — HH
- H-Frame Pole
- Recorded U/G Power Line — P
- Designated U/G Power Line (S.U.E.*) — P

TELEPHONE:

- Existing Telephone Pole
- Proposed Telephone Pole
- Telephone Manhole — T
- Telephone Booth
- Telephone Pedestal — T
- Telephone Cell Tower
- U/G Telephone Cable Hand Hole — HH
- Recorded U/G Telephone Cable — T
- Designated U/G Telephone Cable (S.U.E.*) — T
- Recorded U/G Telephone Conduit — TC
- Designated U/G Telephone Conduit (S.U.E.*) — TC
- Recorded U/G Fiber Optics Cable — T FO
- Designated U/G Fiber Optics Cable (S.U.E.*) — T FO

WATER:

- Water Manhole — W
- Water Meter
- Water Valve
- Water Hydrant
- Recorded U/G Water Line — W
- Designated U/G Water Line (S.U.E.*) — W
- Above Ground Water Line — A/G Water

TV:

- TV Satellite Dish
- TV Pedestal — C
- TV Tower
- U/G TV Cable Hand Hole — HH
- Recorded U/G TV Cable — TV
- Designated U/G TV Cable (S.U.E.*) — TV
- Recorded U/G Fiber Optic Cable — TV FO
- Designated U/G Fiber Optic Cable (S.U.E.*) — TV FO

GAS:

- Gas Valve
- Gas Meter
- Recorded U/G Gas Line — G
- Designated U/G Gas Line (S.U.E.*) — G
- Above Ground Gas Line — A/G Gas

SANITARY SEWER:

- Sanitary Sewer Manhole
- Sanitary Sewer Cleanout
- U/G Sanitary Sewer Line — SS
- Above Ground Sanitary Sewer — A/G Sanitary Sewer
- Recorded SS Forced Main Line — FSS
- Designated SS Forced Main Line (S.U.E.*) — FSS

MISCELLANEOUS:

- Utility Pole
- Utility Pole with Base
- Utility Located Object
- Utility Traffic Signal Box — S
- Utility Unknown U/G Line — ?UTL
- U/G Tank; Water, Gas, Oil
- A/G Tank; Water, Gas, Oil
- U/G Test Hole (S.U.E.*)
- Abandoned According to Utility Records — AATUR
- End of Information — E.O.I.

bphillips
r:\roadway\proj\b4232_rdy_pshtb.dgn
12/14/2010 2:24:48 PM

PROJECT REFERENCE	SHEET NO.
B-4232	4
ROADWAY DESIGN ENGINEER	HYDRAULICS ENGINEER

GIBSON ENGINEERS, PC
LICENSE C-2487
Prepared in the Office of: GIBSON ENGINEERS, PC

GENERAL NOTES:

2006 SPECIFICATIONS
EFFECTIVE: 07-18-06
REVISED: 07-30-08

GRADE LINE:
GRADING AND SURFACING:

THE GRADE LINES SHOWN DENOTE THE FINISHED ELEVATION OF THE PROPOSED SURFACING AT GRADE POINTS SHOWN ON THE TYPICAL SECTIONS. GRADE LINES MAY BE ADJUSTED AT THEIR BEGINNING AND ENDING AND AT STRUCTURES AS DIRECTED BY THE ENGINEER IN ORDER TO SECURE A PROPER TIE-IN.

GRADING:

THE GRADE LINES SHOWN DENOTE THE FINISHED ELEVATION OF THE PROPOSED OR FUTURE SURFACING AT GRADE POINTS SHOWN ON THE TYPICAL SECTIONS. GRADE LINES MAY BE ADJUSTED AT THEIR BEGINNING AND ENDING AND AT STRUCTURES AS DIRECTED BY THE ENGINEER IN ORDER TO SECURE A PROPER TIE-IN.

CLEARING:

CLEARING ON THIS PROJECT SHALL BE PERFORMED TO THE LIMITS ESTABLISHED BY METHOD II.

SUPERELEVATION:

ALL CURVES ON THIS PROJECT SHALL BE SUPERELEVATED IN ACCORDANCE WITH STD. NO. 225.04 USING THE RATE OF SUPERELEVATION AND RUNOFF SHOWN ON THE PLANS. SUPERELEVATION IS TO BE REVOLVED ABOUT THE GRADE POINTS SHOWN ON THE TYPICAL SECTIONS.

SHOULDER CONSTRUCTION:

ASPHALT, EARTH, AND CONCRETE SHOULDER CONSTRUCTION ON THE HIGH SIDE OF SUPERELEVATED CURVES SHALL BE IN ACCORDANCE WITH STD. NO. 560.01.

SIDE ROADS:

THE CONTRACTOR WILL BE REQUIRED TO DO ALL NECESSARY WORK TO PROVIDE SUITABLE CONNECTIONS WITH ALL ROADS, STREETS, AND DRIVES ENTERING THIS PROJECT. THIS WORK WILL BE PAID FOR AT THE CONTRACT UNIT PRICE FOR THE PARTICULAR ITEMS INVOLVED.

GUARDRAIL:

THE GUARDRAIL LOCATIONS SHOWN ON THE PLANS MAY BE ADJUSTED DURING CONSTRUCTION AS DIRECTED BY THE ENGINEER. THE CONTRACTOR SHOULD CONSULT WITH THE ENGINEER PRIOR TO ORDERING GUARDRAIL MATERIAL.

TEMPORARY SHORING:

SHORING REQUIRED FOR THE MAINTENANCE OF TRAFFIC NOT SHOWN ON THE PLANS WILL BE PAID FOR AT THE CONTRACT PRICE FOR "TEMPORARY SHORING".

SUBSURFACE PLANS:

NO SUBSURFACE PLANS ARE AVAILABLE ON THIS PROJECT. THE CONTRACTOR SHOULD MAKE HIS OWN INVESTIGATION AS TO THE SUBSURFACE CONDITIONS.

END BENTS:

THE ENGINEER SHALL CHECK THE STRUCTURE END BENT PLANS, DETAILS, AND CROSS-SECTION PRIOR TO SETTING OF THE SLOPE STAKES FOR THE EMBANKMENT OR EXCAVATION APPROACHING A BRIDGE.

UTILITIES:

ANY RELOCATION OF EXISTING UTILITIES WILL BE ACCOMPLISHED BY OTHERS.

APPROXIMATE GUARDRAIL LENGTH

STATION	LOCATION	STATION	LOCATION	LENGTH
-L- 14+42.00 +/-	LT	-L- 15+80.00 +/-	LT	137.5'
-L- 12+68.00 +/-	RT	-L- 15+68.00 +/-	RT	300'
-L- 16+60.00 +/-	LT	-L- 16+85.00 +/-	LT	25'
-L- 17+09.00 +/-	LT	-L- 19+59.00 +/-	LT	250'
-L- 16+48.00 +/-	RT	-L- 16+73.00 +/-	RT	25'
		SUBTOTAL		737.5
		ANCHOR DEDUCTIONS		281.25'
		TOTAL		456.25'
		SAY		462.5

ANCHOR DEDUCTIONS

GRAU-350	4 X 50'	200'
TYPE B-77	3 X 18.75'	56.25'
IA-350	1 X 25'	25'
TOTAL ANCHOR DEDUCTIONS		281.25'

APPROXIMATE GUARDRAIL LENGTH

STATION	LOCATION	STATION	LOCATION	LENGTH
-L- 16+60.00 +/-	LT	SHOP CURVE	LT	14.15'
		TOTAL		14.15'
		SAY		25'

EFF. 07-18-06
REV. 01-02-07

2006 ROADWAY ENGLISH STANDARD DRAWINGS

The following Roadway Standards as appear in "Roadway Standard Drawings" Highway Design Branch - N. C. Department of Transportation - Raleigh, N. C., Dated July 18, 2006 are applicable to this project and by reference hereby are considered a part of these plans:

STD.NO. TITLE

DIVISION 2 - EARTHWORK
200.02 Method of Clearing - Method II
225.02 Guide for Grading Subgrade - Secondary and Local
225.04 Method of Obtaining Superelevation - Two Lane Pavement

DIVISION 3 - PIPE CULVERTS
310.10 Driveway Pipe Construction

DIVISION 4 - MAJOR STRUCTURES
422.10 Reinforced Bridge Approach Fills

DIVISION 5 - SUBGRADE, BASES AND SHOULDERS
560.01 Method of Shoulder Construction - High Side of Superelevated Curve - Method I

DIVISION 8 - INCIDENTALS
840.29 Frames and Narrow Slot Flat Grates
840.35 Traffic Bearing Grated Drop Inlet - for Cast Iron Double Frame and Grates
840.46 Traffic Bearing Precast Drainage Structure
840.66 Drainage Structure Steps
848.04 Street Turnout
862.01 Guardrail Placement
862.02 Guardrail Installation
862.03 Structure Anchor Units
862.04 Anchoring End of Guardrail - B-77 and B-83 Anchor Units
876.02 Guide for Rip Rap at Pipe Outlets

bphillips
R:\Roadway\Proj\b4232_rdy_gshle.dgn
12/14/2010 2:43:24 PM

PROJECT REFERENCE	SHEET NO.
B-4232	5
ROADWAY DESIGN ENGINEER	HYDRAULICS ENGINEER

NORTH CAROLINA PROFESSIONAL SEAL 27304 MICHAEL L. CERAMI
12/14/10
GIBSON ENGINEERS, PC
LICENSE C-2487
Prepared in the Office of: GIBSON ENGINEERS, PC

DESIGN DATA

ADT 2005 = 4200 vpd
ADT 2025 = 7800 vpd
V = 60 MPH

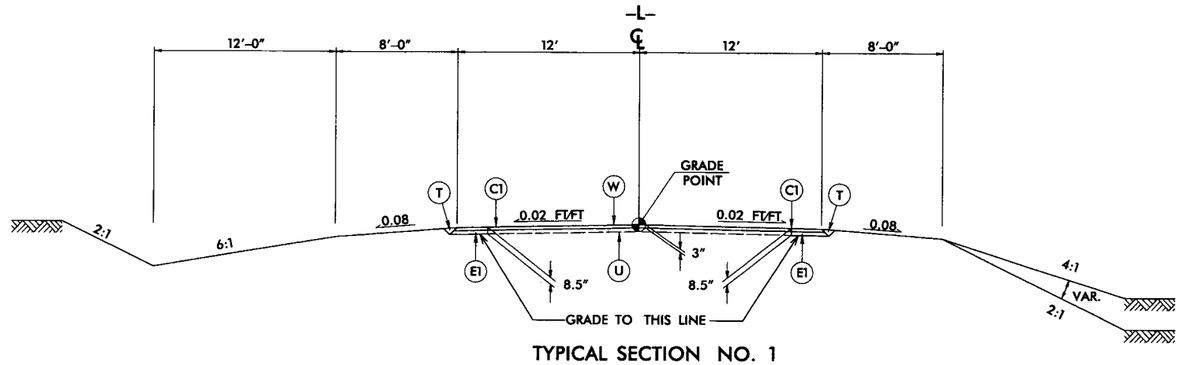

TYPICAL SECTION NO. 1

USE TYPICAL SECTION NO. 1:

-L- STA 11+50 TO 15+73.43 (BEG. BRIDGE)
-L- STA 16+55.67 (END BRIDGE) TO 20+50

NOTE: FOR VARIABLE SLOPES SEE CROSS SECTIONS. SEE PLANS FOR TAPERS.

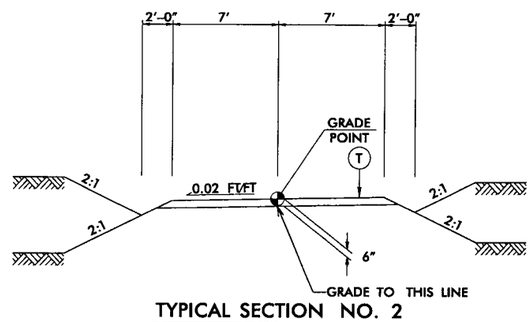

TYPICAL SECTION NO. 2

USE TYPICAL SECTION NO. 3:

-SR1- STA 10+40.00 TO 11+62.64
-SR2- STA 10+12.10 TO 11+45.00

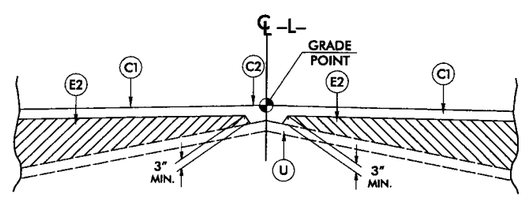

Detail Showing Method of Wedging

PAVEMENT SCHEDULE	
C1	PROP. APPROX. 3" ASPHALT CONCRETE SURFACE COURSE, TYPE S9.5B, AT AN AVERAGE RATE OF 168 LBS. PER SQ. YD. IN EACH OF TWO LAYERS.
C2	PROP. VAR. DEPTH ASPHALT CONCRETE SURFACE COURSE, TYPE S9.5B, AT AN AVERAGE RATE OF 112 LBS. PER SQ. YD. PER 1" DEPTH TO BE PLACED IN LAYERS NOT LESS THAN 1½" IN DEPTH OR GREATER THAN 2" IN DEPTH.
E1	PROP. APPROX. 5.5" ASPHALT CONCRETE BASE COURSE, TYPE B25.0B, AT AN AVERAGE RATE OF 627 LBS. PER SQ. YD.
E2	PROP. VAR. DEPTH ASPHALT CONCRETE BASE COURSE, TYPE B25.0B, AT AN AVERAGE RATE OF 114 LBS. PER SQ. YD. PER 1" DEPTH TO BE PLACED IN LAYERS NOT LESS THAN 3" IN DEPTH OR GREATER THAN 5½" IN DEPTH.
T	EARTH MATERIAL.
U	EXISTING PAVEMENT.
W	WEDGING (SEE DETAIL SHOWING METHOD OF WEDGING).

NOTE: PAVEMENT EDGE SLOPES ARE 1:1 UNLESS SHOWN OTHERWISE.

bphillips
r:\roadway\Proj\b4232_rdy_typ.dgn
12/14/2010 2:29:57 PM

5/14/99

STATE OF NORTH CAROLINA
DEPT. OF TRANSPORTATION
DIVISION OF HIGHWAYS
RALEIGH, N.C.

7-06

ENGLISH DETAIL DRAWING FOR
METHOD OF PIPE INSTALLATION
FLEXIBLE PIPE

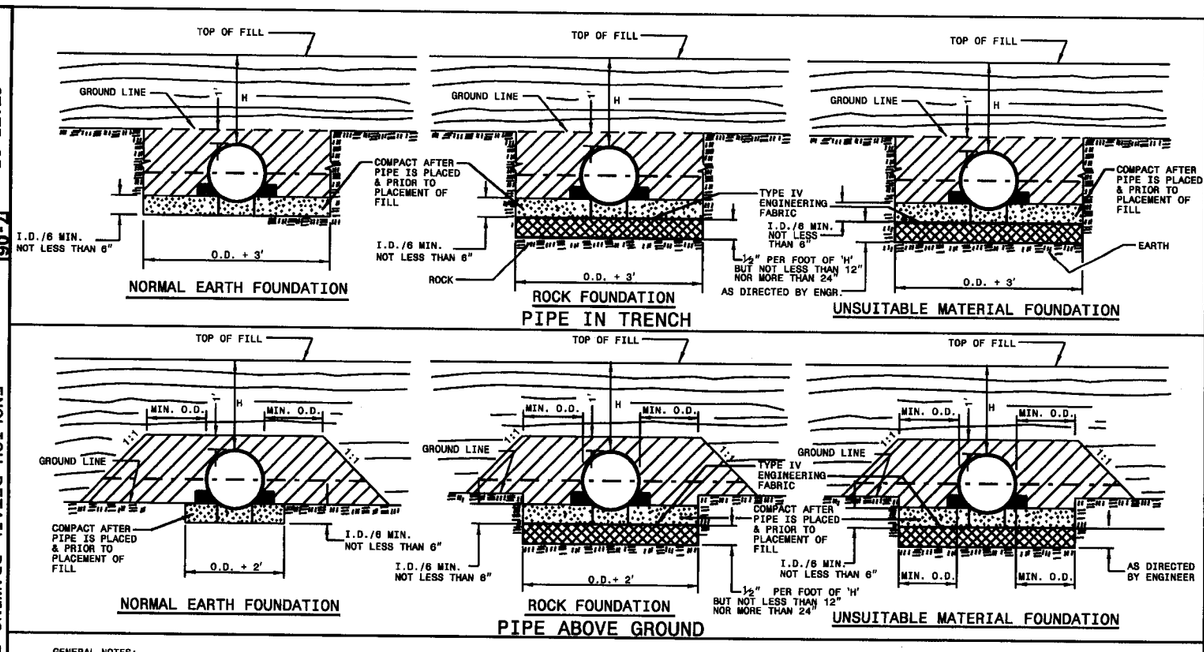

GENERAL NOTES:

I.D. = THE MAXIMUM HORIZONTAL INSIDE DIAMETER DIMENSION.

O.D. = THE MAXIMUM HORIZONTAL OUTSIDE DIAMETER DIMENSION.

H = THE FILL HEIGHT MEASURED VERTICALLY AT ANY POINT ALONG THE PIPE FROM THE TOP OF THE PIPE TO THE TOP OF THE EMBANKMENT AT THAT POINT.

TAKE CARE TO FULLY COMPACT HAUNCH ZONE OF PIPE BACKFILL.

LOOSELY PLACED SELECT MATERIAL CLASS III OR CLASS II, TYPE 1 FOR PIPE BEDDING. LEAVE SECTION DIRECTLY BENEATH PIPE UNCOMPACTED AS PIPE SEATING AND BACKFILL WILL ACCOMPLISH COMPACTION.

DO NOT OPERATE HEAVY EQUIPMENT OVER ANY PIPE CULVERT UNTIL THE PIPE CULVERT HAS BEEN PROPERLY BACKFILLED AND COVERED WITH AT LEAST 3 FEET OF APPROVED MATERIAL.

SPRINGLINE OF PIPE

SELECT BACKFILL MATERIAL CLASS III OR CLASS II, TYPE 1 ABOVE AND BELOW SPRINGLINE.

APPROVED SUITABLE LOCAL MATERIAL.

UNDISTURBED EARTH MATERIAL

SELECT MATERIAL CLASS V OR VI FOR FOUNDATION CONDITIONING. ENCAPSULATE WITH ENGINEERING FABRIC AS DIRECTED BY THE ENGINEER.

SHEET 1 OF 3
300D01

STATE OF NORTH CAROLINA
DEPT. OF TRANSPORTATION
DIVISION OF HIGHWAYS
RALEIGH, N.C.

7-06

ENGLISH DETAIL DRAWING FOR
METHOD OF PIPE INSTALLATION
RIGID PIPE

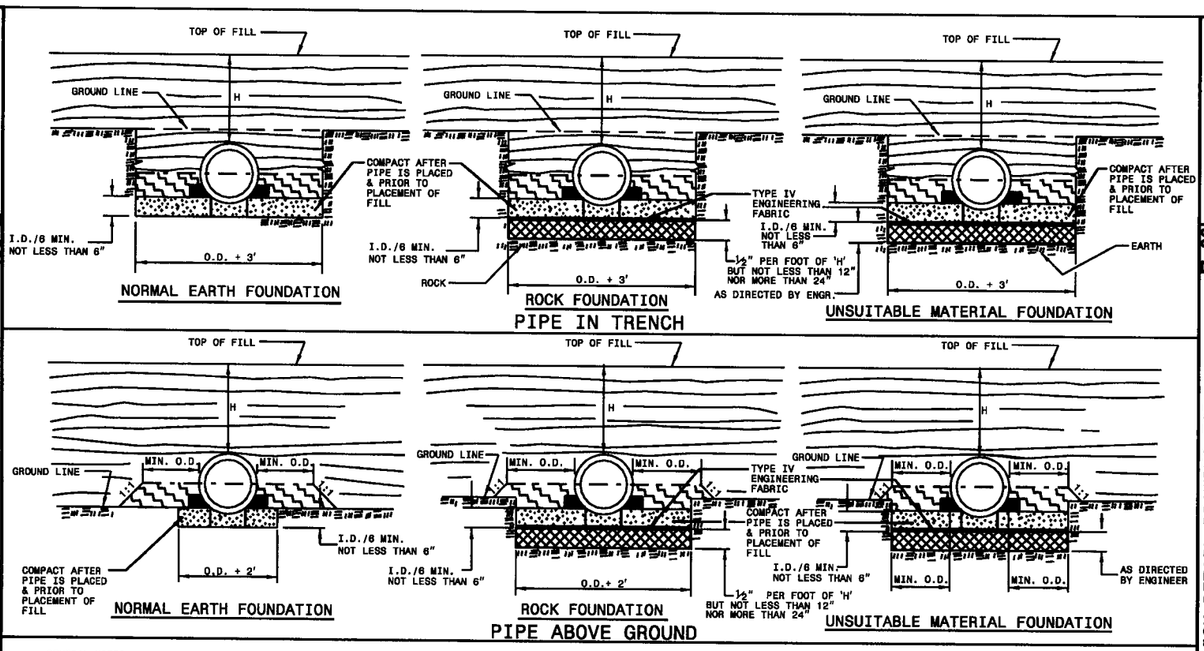

GENERAL NOTES:

I.D. = THE MAXIMUM HORIZONTAL INSIDE DIAMETER DIMENSION.

O.D. = THE MAXIMUM HORIZONTAL OUTSIDE DIAMETER DIMENSION.

H = THE FILL HEIGHT MEASURED VERTICALLY AT ANY POINT ALONG THE PIPE FROM THE TOP OF THE PIPE TO THE TOP OF THE EMBANKMENT AT THAT POINT.

TAKE CARE TO FULLY COMPACT HAUNCH ZONE OF PIPE BACKFILL.

LOOSELY PLACED SELECT MATERIAL CLASS III OR CLASS II, TYPE 1 FOR PIPE BEDDING. LEAVE SECTION DIRECTLY BENEATH PIPE UNCOMPACTED AS PIPE SEATING AND BACKFILL WILL ACCOMPLISH COMPACTION.

DO NOT OPERATE HEAVY EQUIPMENT OVER ANY PIPE CULVERT UNTIL THE PIPE CULVERT HAS BEEN PROPERLY BACKFILLED AND COVERED WITH AT LEAST 3 FEET OF APPROVED MATERIAL.

SPRINGLINE OF PIPE

SELECT BACKFILL MATERIAL CLASS III OR CLASS II, BELOW SPRINGLINE.

APPROVED SUITABLE LOCAL MATERIAL ABOVE SPRINGLINE.

UNDISTURBED EARTH MATERIAL

SELECT MATERIAL CLASS V OR VI FOR FOUNDATION CONDITIONING. ENCAPSULATE WITH ENGINEERING FABRIC AS DIRECTED BY THE ENGINEER.

SHEET 2 OF 3
300D01

PROJECT SERVICES UNIT
STANDARDS AND SPECIAL DESIGN
Office 919-250-4128 FAX 919-250-4119

SEE PLATE FOR TITLE

ORIGINAL BY: KKempf
MODIFIED BY: DATE: 5-15-09
CHECKED BY: DATE:
FILE SPEC/s:\cad\cd\stds\stdsdesign\special\30001\0300d01.dgn

PROJECT REFERENCE NO. B-1135
SHEET NO. 6

STATE OF NORTH CAROLINA
DEPT. OF TRANSPORTATION
DIVISION OF HIGHWAYS
RALEIGH, N.C.

7-06

ENGLISH DETAIL DRAWING FOR
METHOD OF PIPE INSTALLATION
FILL HEIGHT TABLES

SHEET 3 OF 3
300D01

FLEXIBLE PIPE

Round Corrugated Steel Pipe
2 2/3 x ½ corrugation **

Diameter (inches)	Minimum cover (inches)	Maximum Height of Cover (feet) (Ga) 16	14	12	10	8
12	12	204	256			
15	12	162	204			
18	12	135	169	239		
21	12	115	145	204		
24	12	100	126	178		
30	12	79	100	142		
36	12	65	83	117	152	
42	12	55	70	100	130	160
48	12	48	61	87	113	139
54	12		54	77	100	123
60	12			69	90	111
66	12				81	100
72	12				74	91
78	12					81
84	12					69

Round Corrugated Aluminum Pipe
2 2/3 x ½ corrugation **

Diameter (inches)	Minimum cover (inches)	Maximum Height of Cover (feet) (Ga) 16	14	12	10	8
12	12	123	155	218	281	344
15	12	98	123	174	224	275
18	12	81	102	144	187	228
21	12	69	87	123	160	195
24	12	60	76	108	139	171
27	12		67	95	123	151
30	12		60	85	111	136
36	12		50	71	92	113
42	12			60	78	96
48	12			52	68	84
54	12			46	50	74
60	12				50	62
66	12					51
72	12					41

** FOR DIFFERENT CORRUGATIONS AND ARCH PIPES REFER TO ROADWAY DESIGN MANUAL OR MANUFACTURERS SPECIFICATION.

HDPE - * (Minimum fill) 2' for pipe diameters ≥ 12" and ≤ 60"
* (Maximum fill) 20' for pipe diameters ≤ 24"
17' for pipe diameters ≥ 30" and ≤ 60"

PVC - * (Minimum fill) 2' for pipe diameters ≥ 12" and ≤ 36"
* (Maximum fill) 30' for pipe diameters ≥ 12" and ≤ 36"

* FILL HEIGHT IS MEASURED FROM THE TOP OF THE PIPE TO THE BOTTOM OF THE PAVEMENT STRUCTURE

REFER TO THE FOLLOWING FOR PIPE SPECIFICATIONS

CSP - AASHTO M36
CAAP - AASHTO M196
HDPE - AASHTO M294
PVC - ASTM F949 or AASHTO M304

NOTES: FILL HEIGHTS SHOWN WERE CALCULATED USING AASHTO LRFD BRIDGE DESIGN SPECIFICATIONS

1' MINIMUM COVER FOR ALL SIDE DRAIN PIPE IN ACCORDANCE WITH THE STANDARD SPECIFICATIONS

RIGID PIPE

RCP - * (Minimum fill) 1' for Class IV & CLASS V
2' for Class III & Class II

* (Maximum fill) 10' - Class II pipe
20' - Class III pipe
30' - Class IV pipe
40' - Class V pipe

(For fills > 40' & < 80' use LRFD Direct Design Method)

* FILL HEIGHT IS MEASURED FROM THE TOP OF THE PIPE TO THE BOTTOM OF THE PAVEMENT STRUCTURE

REFER TO THE FOLLOWING FOR PIPE SPECIFICATIONS

RCP - AASHTO M170

NOTES: FILL HEIGHTS SHOWN WERE CALCULATED USING AASHTO LRFD BRIDGE DESIGN SPECIFICATIONS

1' MINIMUM COVER FOR ALL SIDE DRAIN PIPE IN ACCORDANCE WITH THE STANDARD SPECIFICATIONS

STATE OF NORTH CAROLINA
DEPT. OF TRANSPORTATION
DIVISION OF HIGHWAYS
RALEIGH, N.C.

7-06

ENGLISH DETAIL DRAWING FOR
METHOD OF PIPE INSTALLATION
FILL HEIGHT TABLES

SHEET 3 OF 3
300D01

PROJECT SERVICES UNIT
STANDARDS AND SPECIAL DESIGN
Office 919-250-4128 FAX 919-250-4119

SEE PLATE FOR TITLE

ORIGINAL BY: KKempf DATE: 5-15-98
MODIFIED BY: DATE:
CHECKED BY: DATE:
FILE SPEC: m:\contracts\contracts\special details\erioward\stds\300d01\0300d01.dgn

PROJECT REFERENCE NO. 8-1135
SHEET NO. 7

PROJECT REFERENCE NO.	SHEET NO.
B-4232	8

STATE OF
NORTH CAROLINA
DEPT. OF TRANSPORTATION
DIVISION OF HIGHWAYS
RALEIGH, N.C.

ENGLISH DETAIL DRAWING FOR
ANCHORAGE FOR FRAMES
BRICK/CONCRETE/PRECAST CONCRETE

SHEET 1 OF 1
840D25

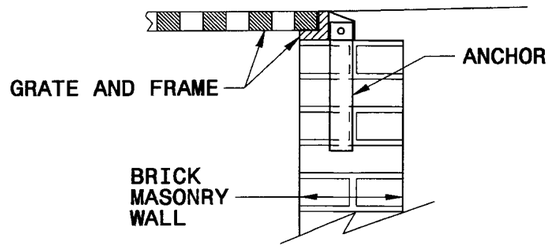

BRICK MASONRY CONSTRUCTION

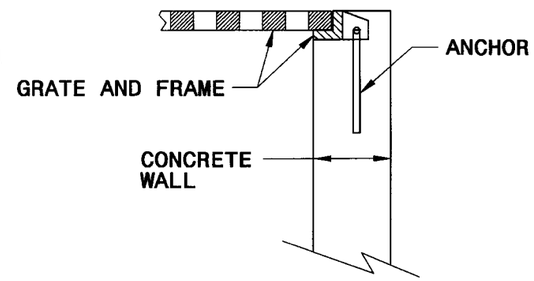

CONCRETE CONSTRUCTION

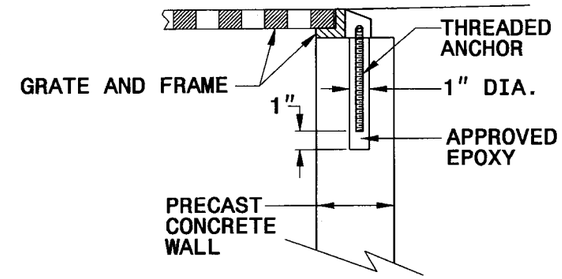

PRECAST CONCRETE CONSTRUCTION

DETAIL SHOWING ANCHORAGE OF FRAME FOR GRATED DROP INLET

NOTE:
CONSTRUCT GRATED DROP INLET TO COINCIDE WITH NORMAL OR SUPERELEVATED SHOULDER OR PAVEMENT SLOPE.

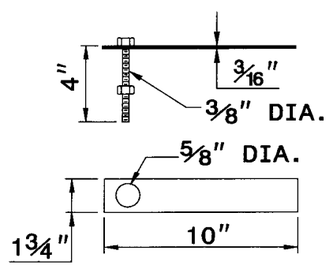

MASONRY ANCHOR
3/8" DIA. BOLT WITH PLATE

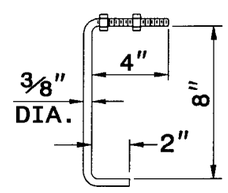

CONCRETE ANCHOR
3/8" DIA. BENT BAR

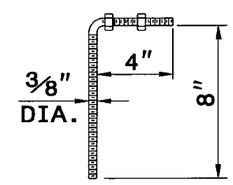

PRECAST CONCRETE ANCHOR
3/8" DIA. BENT BAR

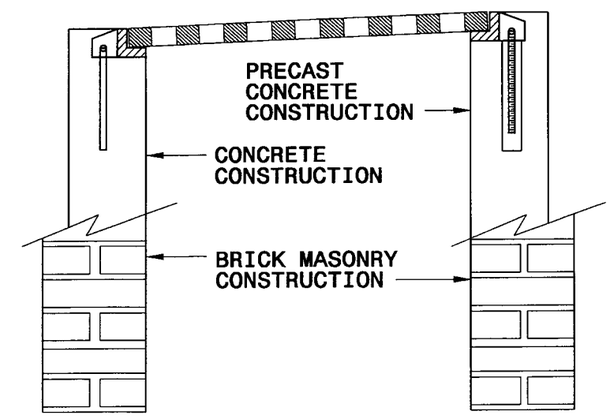

FRAME AND GRATE INSTALLATION FOR NORMAL CROWN AND SUPERELEVATED SECTIONS

STATE OF
NORTH CAROLINA
DEPT. OF TRANSPORTATION
DIVISION OF HIGHWAYS
RALEIGH, N.C.

ENGLISH DETAIL DRAWING FOR
ANCHORAGE FOR FRAMES
BRICK/CONCRETE/PRECAST CONCRETE

SHEET 1 OF 1
840D25

PROJECT SERVICES UNIT
STANDARDS AND SPECIAL DESIGN
Office 919-250-4128 FAX 919-250-4119

SEE PLATE FOR TITLE

ORIGINAL BY: 2006 STD 840.25 DATE: 07/18/06
MODIFIED BY: E.E. WARD DATE: 9/25/06
CHECKED BY: DATE:
FILE SPEC.:

27-SEP-2006 08:59
S:\Contracts\Contracts\Special Details\erioward\stds\06 Stds to Special Details\84025 Anchorage for Frames\0840d25.dgn
erioward AT PS2222293

PROJECT REFERENCE	SHEET NO.
B-4232	9
ROADWAY DESIGN	HYDRAULICS ENGINEER

GIBSON ENGINEERS, PC
LICENSE C-2487

Prepared in the Office of: GIBSON ENGINEERS, PC

VERTICAL SCALE 5' 0 5' 10'
HORIZONTAL SCALE 25' 0 25' 50'

NOTE: FOR PROFILE OF -SRI- AND -SR2- SEE SHEET 10

NOTE: BRIDGE HAS WOOD BENTS, PILES HEAD AND WING WALLS, AND GIRDERS. DECK IS WOOD WITH BST SURFACE

-SR2-
PI Sta 11+01.04
Δ = 38° 19' 39.5" (RT)
D = 47° 44' 47.3"
L = 80.27'
T = 41.70'
R = 120.00'

NAD 88

-SR2- POT Sta. 11+51.08

END CONSTRUCTION
-SR2- POT Sta. 11+45.00

-SR2- PT Sta. 11+39.61

N 29° 53' 40.5" W

N 8° 25' 59.0" E

-SR2- PC Sta. 10+59.33

-L- POT Sta. 16+99.00
-SRI- POT Sta. 11+76.36
-SR2- POT Sta. 10+00.00

-BL- 3 POT 5+00.00
-L- POT 10+60.99 OFF 15.16'

-BL- 4 PINC 10+91.57
-L- POT 16+52.55 OFF 17.60'

-BL- 5 POT 16+67.01
-L- POT 22+27.99 OFF 15.32'

-L- POT Sta. 22+95.41

-L- POT Sta. 10+00.00

BEGIN PROJECT B-4232
-L- Sta. 11+50.00

END PAVING B-4232
-L- Sta. 20+50.00

END PROJECT B-4232
-L- Sta. 21+30.00

-L- PT Sta. 11+46.36

-SRI- PRC Sta. 11+02.40

-SRI- PC Sta. 10+43.96

BEGIN CONSTRUCTION
-SRI- POT Sta. 10+40.00

-SRI- POT Sta. 10+00.00

N 67° 21' 17.9" E

N 6° 21' 18.0" E

N 4° 42' 27.0" W

1 MARY VIRGINIA LANGSTON DB 1218 - PG 305

2 KARL B. MANNING ESTATE DB 97E - PG 331 DB W41 - PG 269

3 CAROLINA TELEPHONE AND TELEGRAPH DB 120 - PG 164 DB 2041 - PG 727

4 LAYMAN S. SMITH DB 94E - PG 505

5 PHYLLIS M. CARRAWAY DB 340 - PG 394

KARL B. MANNING DB J45 - PG 392

THOMAS E. RIGSBY DB 653 - PG 257

LEOLO BRILEY CARAWAN DB 00E - PG 389

ISBKD

BRIDGE NO. 9

SWIFT CREEK

BM #1
-BL- 9+94.75
158.76 RT
ELEV. 51.27'

GRASS SWALE SPECIAL BASE DITCH SEE DETAIL A

TELEPHONE PLATFORM (WD)
CLASS B RIP RAP
EST 2 TONS
EST 7 SY FF

DETAIL SHOWING PAVEMENT - BRIDGE RELATIONSHIP

BEGIN APPROACH SLAB STA. 15+62.47
END APPROACH SLAB STA. 16+66.63
** TYPE B-77
AT-1
42' CLEAR ROADWAY
GRAU 350
BEGIN BRIDGE STA. 15+73.43
END BRIDGE STA. 16+55.67
** G/R ANCHOR UNIT REQUIRED

DETAIL A
SPECIAL 'V' DITCH
GRASS SWALE
(Not to Scale)
Natural Ground
Min. D = 1.0 Ft.
B = 1.0 Ft.
Fill Slope
STA. 14+00 TO STA. 15+50 LT.

-SRI-
PI Sta 10+74.76
Δ = 44° 38' 45.9" (RT)
D = 76° 23' 39.7"
L = 58.44'
T = 30.79'
R = 75.00'

PI Sta 11+25.03
Δ = 33° 35' 00.9" (LT)
D = 76° 23' 39.7"
L = 43.96'
T = 22.63'
R = 75.00'

DATUM DESCRIPTION

THIS IS AN ENGLISH PROJECT BASED ON HARN-NAD83/95 DATUM.
NCDOT GPS MONUMENT "B4232-1" WAS HELD AS A GRID COORDINATE AND THE NETWORK WAS LOCALIZED FROM THERE.
STATE PLANE GRID COORDINATES OF
NORTHING: 649854.6025(ft) EASTING: 2467340.1637(ft)
THE AVERAGE COMBINED GRID FACTOR USED ON THIS PROJECT (GROUND TO GRID) IS: 0.99988680
THE N.C. LAMBERT GRID BEARING AND LOCALIZED HORIZONTAL GROUND DISTANCE FROM "B4232-1" TO -L- STATION 10+00 IS
N 69° 59' 06.2" E 419.32'
ALL LINEAR DIMENSIONS ARE LOCALIZED HORIZONTAL DISTANCES
VERTICAL DATUM USED IS NAVD 88

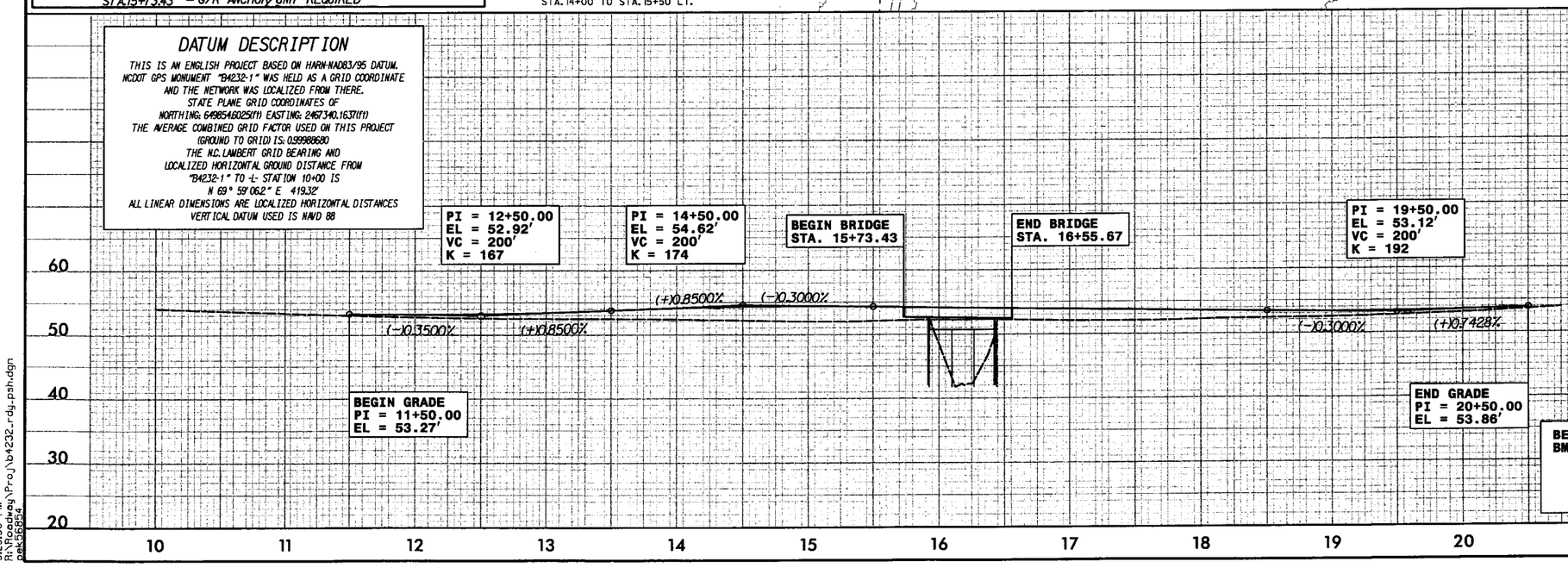

BRIDGE HYDRAULIC DATA

DESIGN DISCHARGE	= 1,500	CFS
DESIGN FREQUENCY	= 50	YRS
DESIGN HW ELEVATION	= 51.0	FT
BASE DISCHARGE	= 1,850	CFS
BASE FREQUENCY	= 100	YRS
BASE HW ELEVATION	= 51.6	FT
OVERTOPPING DISCHARGE	= 1,815	CFS
OVERTOPPING FREQUENCY	= 50+	YRS
OVERTOPPING ELEVATION	= 52.2	FT
DATE OF SURVEY	= 7-25-05	
W.S. ELEVATION AT DATE OF SURVEY	=	FT

BENCH MARK
BM 1: RR SPIKE SET IN 18" TWIN HARDWOOD
-BL- STA 9+95 RIGHT 159'
-L- STA 15+56.36 RIGHT 141.22'
N 650082 E 2468302
EL = 51.27'

4/6/2011
5:25:30 PM
R:\Roadway\Proj\b4232_rdy_psh.dgn
pak56854

PROJECT REFERENCE NO.	SHEET NO.
B-4232	10
ROADWAY DESIGN ENGINEER	HYDRAULICS ENGINEER
GIBSON ENGINEERS, PC LICENSE C-2487	

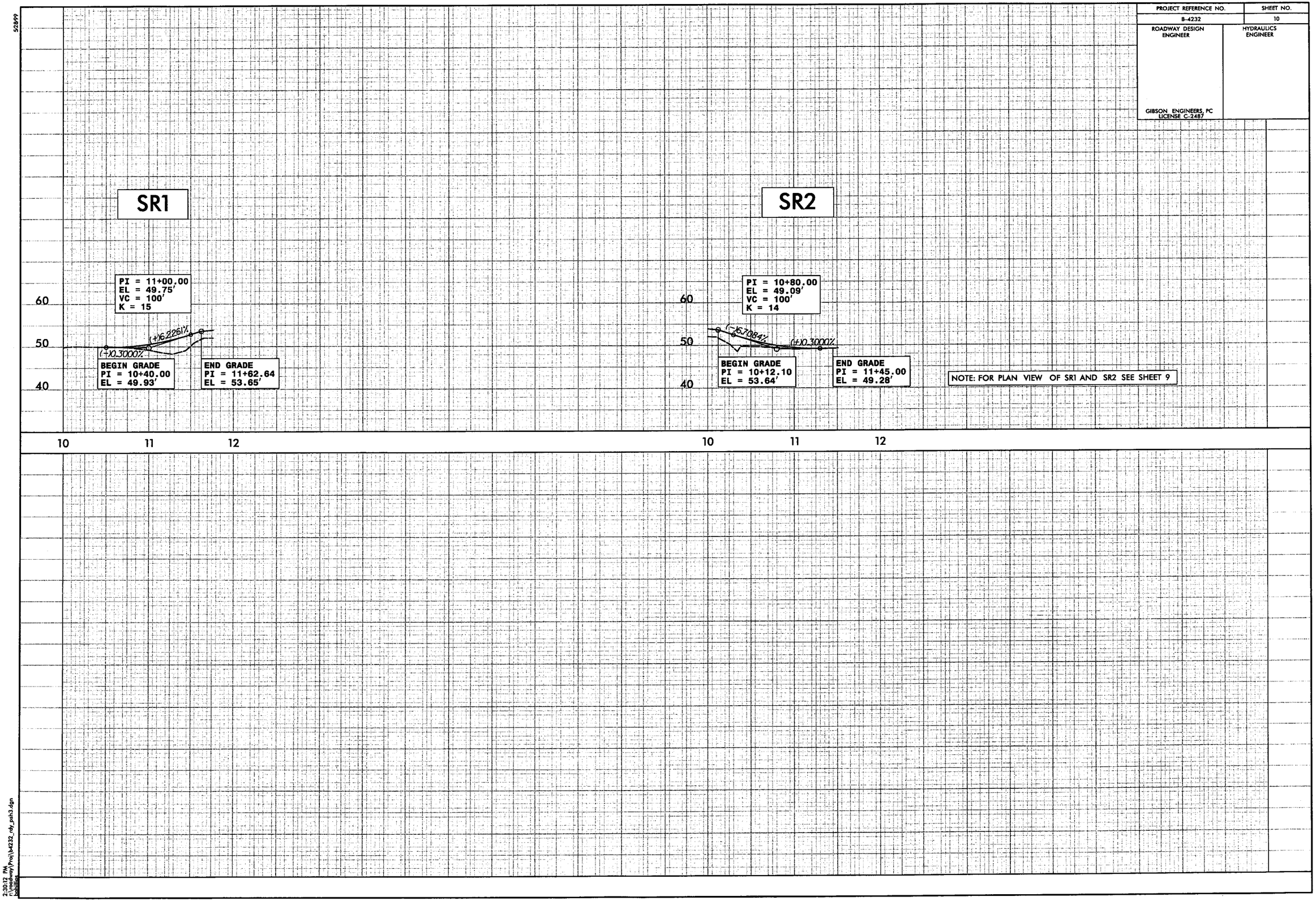

NOTE: FOR PLAN VIEW OF SR1 AND SR2 SEE SHEET 9

52899

2:30:12 PM
c:\pwworking\Proj\b4232_rdy_pah3.dgn
bobbliss

PROJ. REFERENCE NO.	SHEET NO.
B-4232	11
PITT #9	

0 5 10

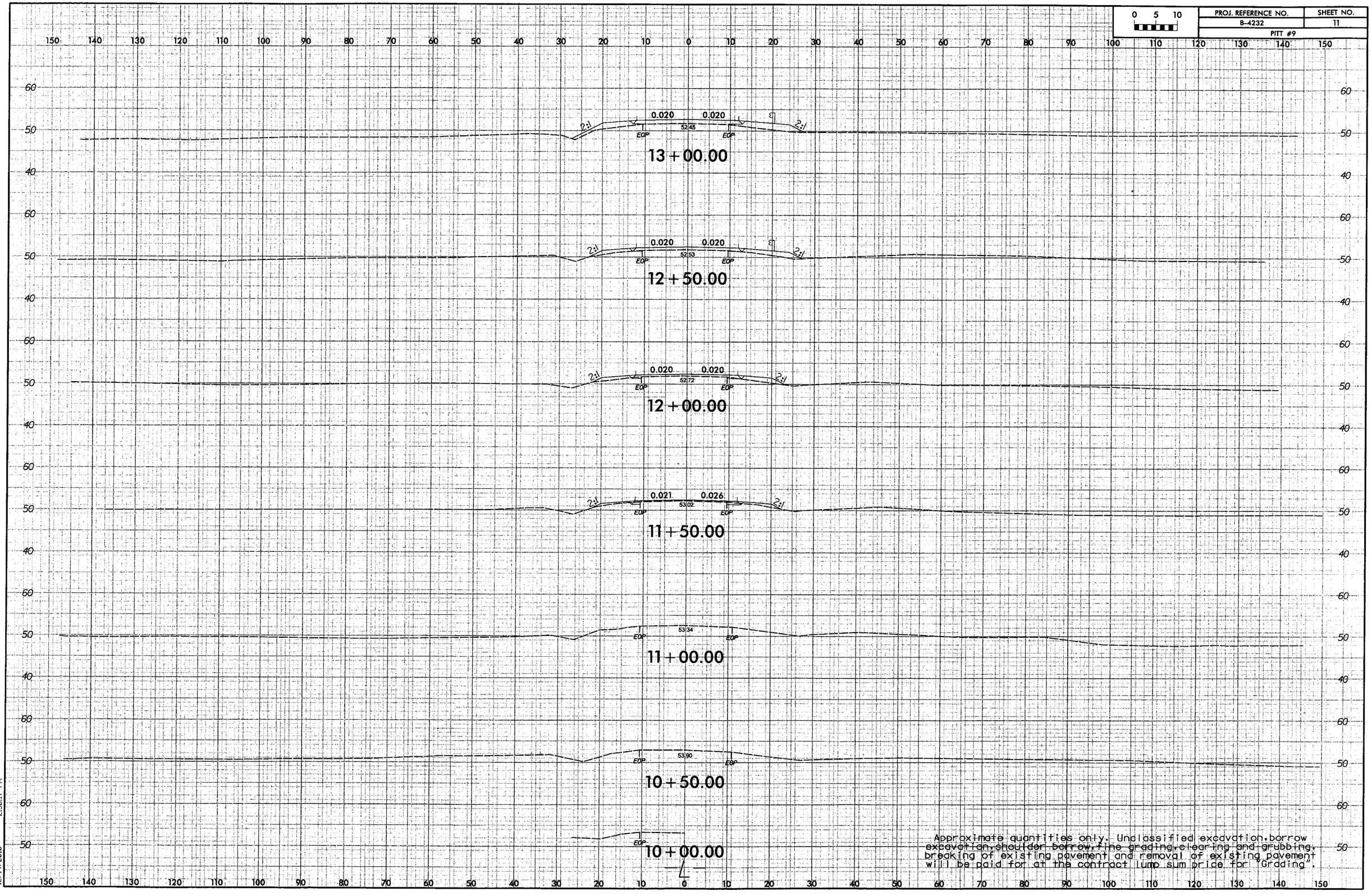

Approximate quantities only. Unclassified excavation, borrow excavation, shoulder borrow, fine grading, clearing and grubbing, breaking of existing pavement and removal of existing pavement will be paid for at the contract lump sum price for "Grading".

bphillips
r:\roadway\xsc\xpl\b4232_rdy_xpl_1.dgn
12/14/2010 2:38:17 PM

PROJ. REFERENCE NO.	SHEET NO.
B-4232	12
PITT #9	

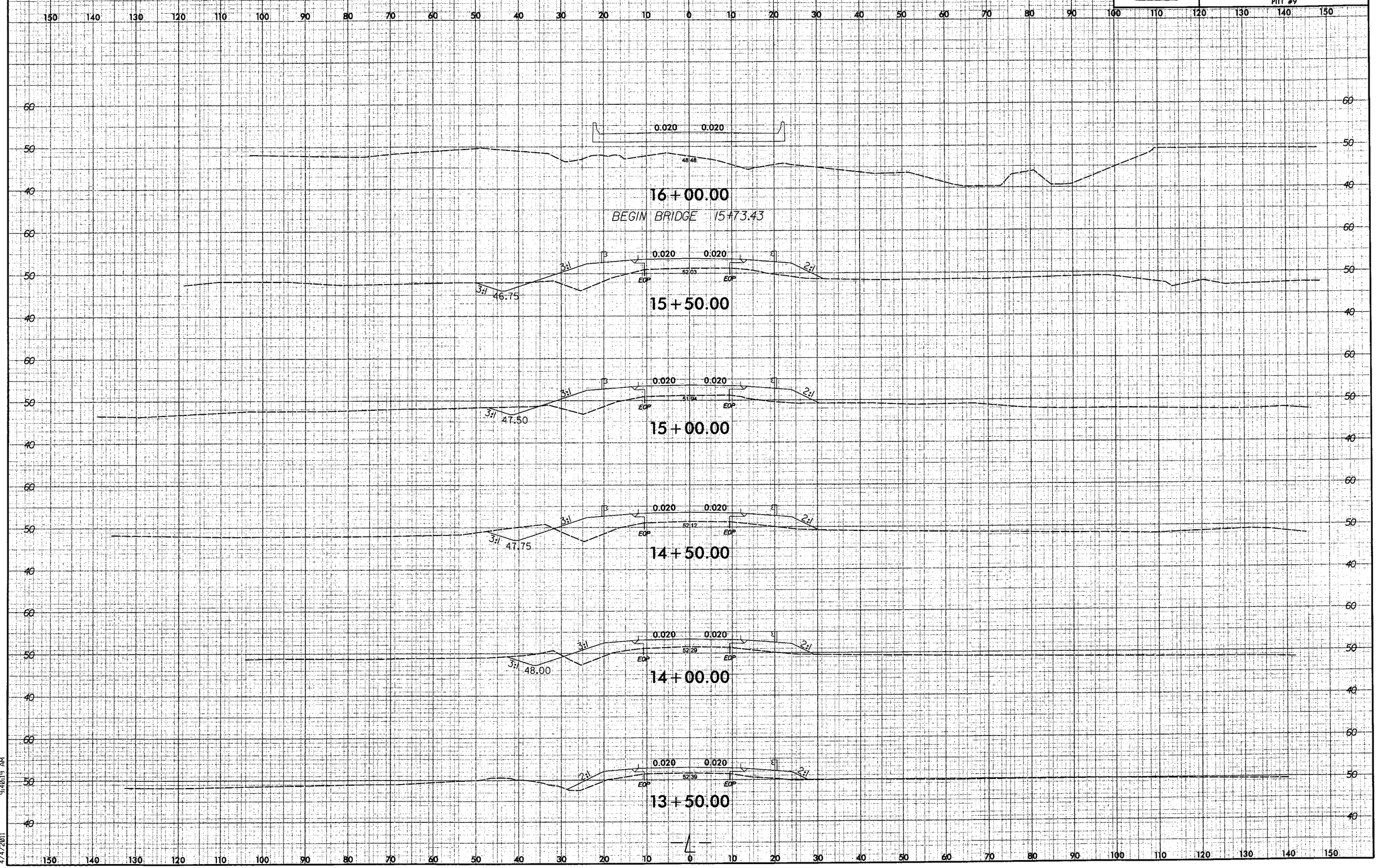

pek56854
R:\Roadway\Xsc\XPL\b4232_rdy_xpl1.dgn
4/4/2011 9:40:19 AM

PROJ. REFERENCE NO.	SHEET NO.
B-4232	13
PITT #9	

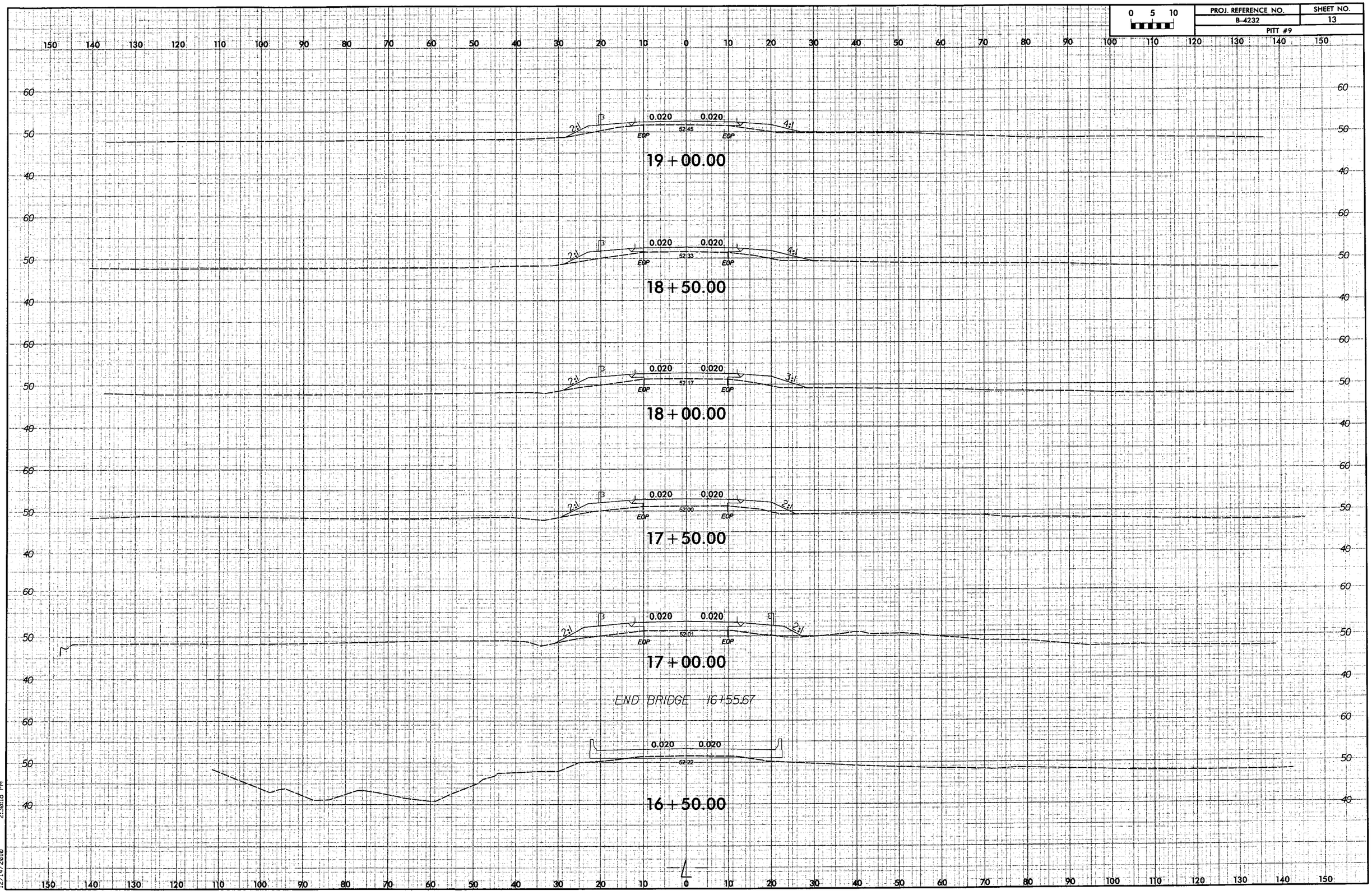

bphillips
r:\roadway\xsc\xpl\b4232_rdy_xpl1.dgn
12/14/2010 2:36:18 PM

PROJ. REFERENCE NO.	SHEET NO.
B-4232	14
PITT #9	

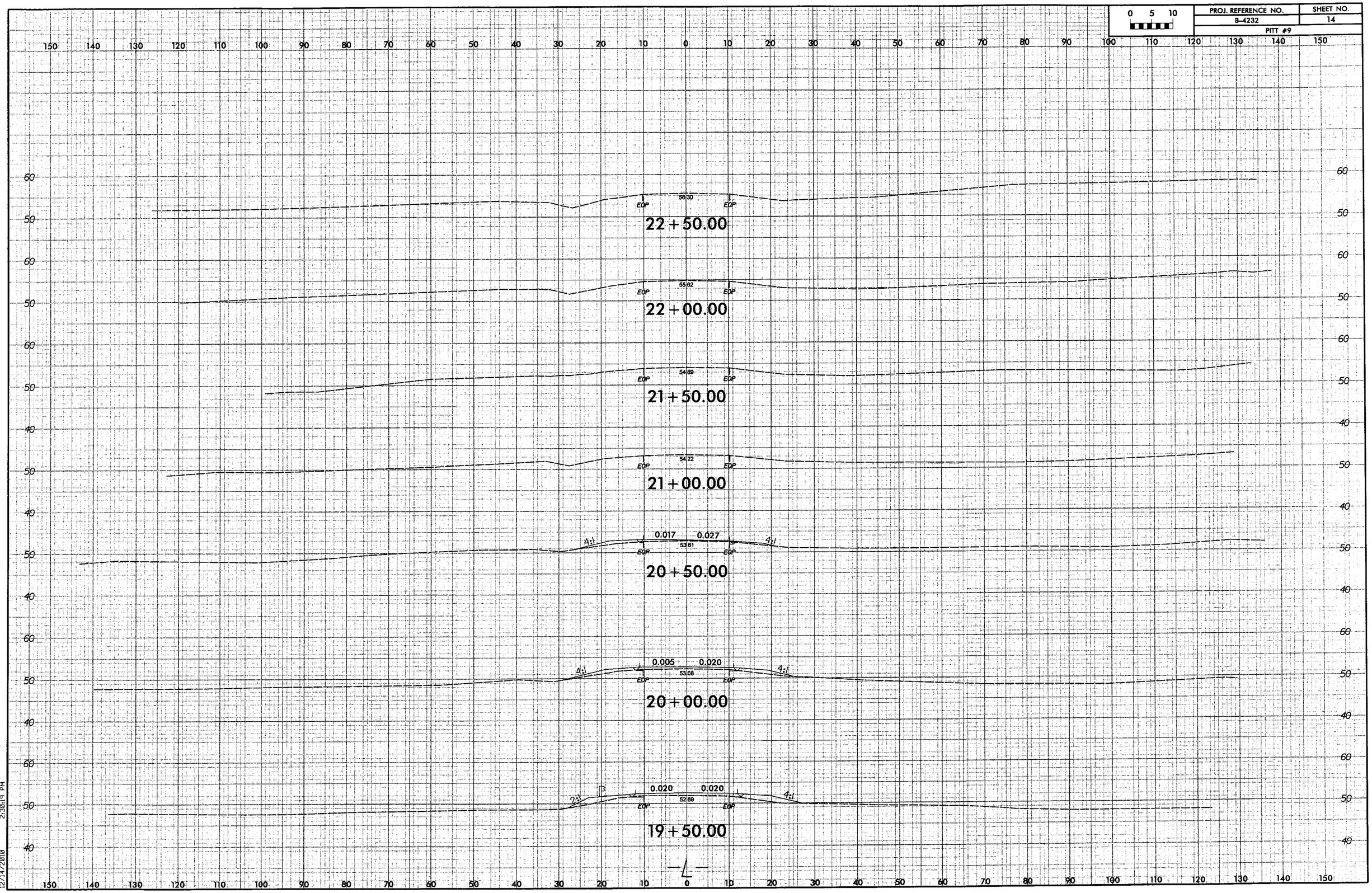

bphillips
r:\roadway\xsc\xpl\b4232_rdy_xpl_1.dgn
12/14/2010 2:30:19 PM

PROJ. REFERENCE NO.	SHEET NO.
B-4232	15
PITT #9	

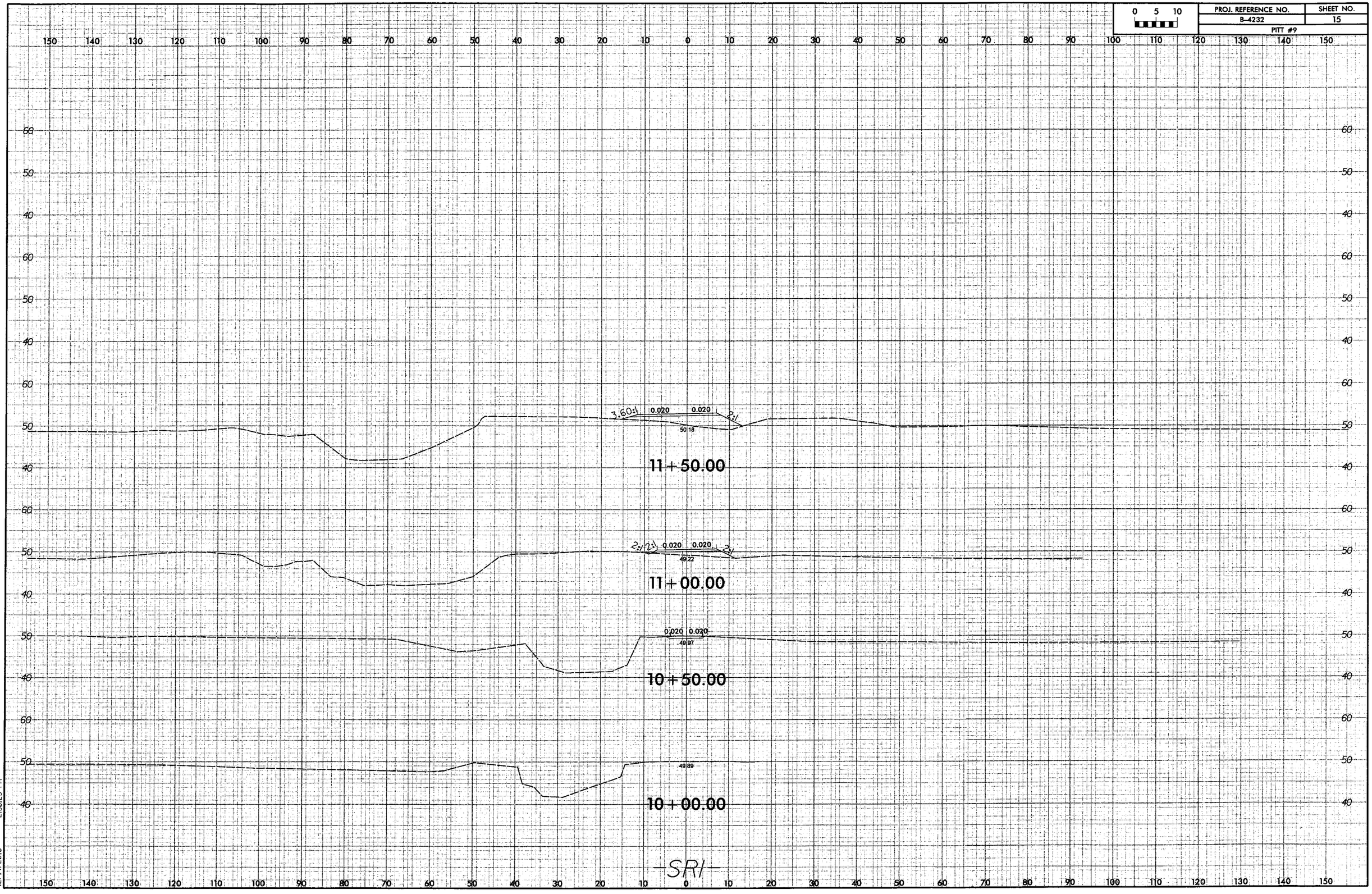

bphillips
rhoopes
12/14/2010
2:30:23 PM
Xsc\XPL\b4232_rdu_xpl_sr1_3.dgn

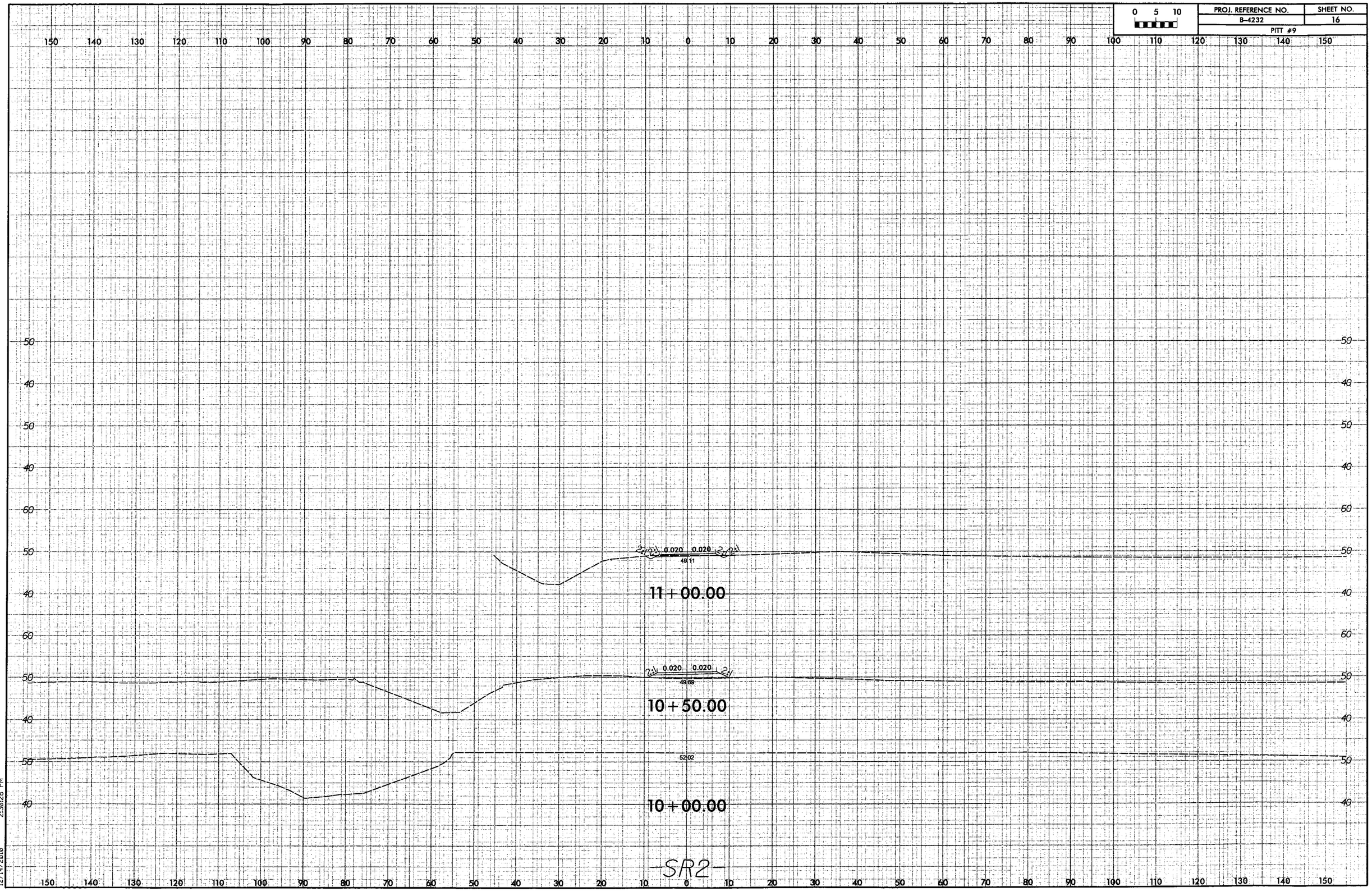

bphillips
r:\roadway\Xsc\XPL\b4232_rdy_xpl_sr2_3.dgn
12/14/2010 2:38:28 PM

TOTAL BILL OF MATERIAL

	REMOVAL OF EXISTING STRUCTURE	UNCLASSFIED STRUCTURE EXCAVATION	CLASS A CONCRETE	BRIDGE APPROACH SLABS	REINFORCING STEEL	HP 12 X 53 STEEL PILES		PRECAST CONCRETE BARRIER RAIL	RIP RAP CLASS II (2'-0" THICK)	FILTER FABRIC FOR DRAINAGE	ELAST. BEARINGS	3'-0" X 1'-9" PRESTRESSED CONCRETE CORED SLABS	
	LUMP SUM	LUMP SUM	CU. YDS	LUMP SUM	LBS.	NO.	LIN. FT.	LIN. FT.	TONS	SQ. YDS.	LUMP SUM	NO.	LIN. FT.
SUPERSTRUCTURE	LUMP SUM			LUMP SUM				160.0			LUMP SUM	30	1200
END BENT 1			17.3		2,515	7	420		140	125			
BENT 1			12.8		2,512	9	495						
END BENT 2			17.6		2,519	10	550		85	75			
TOTAL	LUMP SUM	LUMP SUM	47.7	LUMP SUM	7,546	26	1465	160.0	225	200	LUMP SUM	30	1200

WBS NO. 33575.3.1

PITT COUNTY

STATION: 16+14.55 -L-

REPLACES BRIDGE NO. 9

STATE OF NORTH CAROLINA
DEPARTMENT OF TRANSPORTATION
RALEIGH

BILL OF MATERIAL

42' CLEAR ROADWAY-105° SKEW

NORTH CAROLINA PROFESSIONAL SEAL 023908 ENGINEER MARK A. AVERETTE
4-28-11

PLANS PREPARED BY:

SIMPSON ENGINEERS & ASSOCIATES
5520 Dillard Drive
Suite 120
Cary, NC 27518
(919) 852-0468
(919) 852-0598 (Fax)
www.simpsonengr.com
LICENSURE NO. C-2521

REVISIONS						SHEET NO.
NO.	BY:	DATE:	NO.	BY:	DATE:	17
1			3			TOTAL SHEETS
2			4			32

DRAWN BY : D. G. VESTER DATE : 6-08
CHECKED BY : M. A. AVERETTE DATE : 6-08

4/28/2011 2:52:04 PM G:\Projects\BMU\Pitt 9\Drawings\B4232_sd_bom.dgn

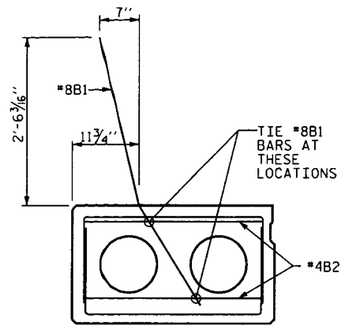

TIE LOCATION FOR #8B1

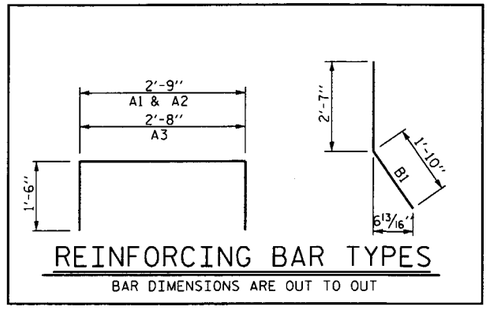

REINFORCING BAR TYPES

BAR DIMENSIONS ARE OUT TO OUT

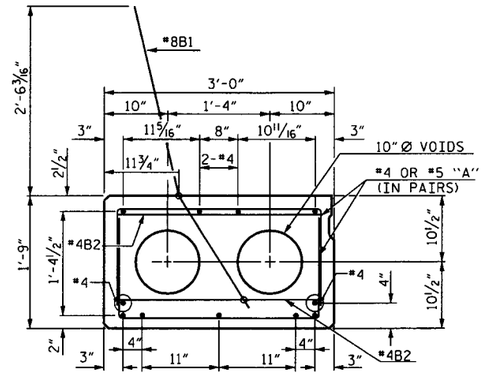

25' SPAN

7 - 0.6" Ø H.S. STRANDS
EXTERIOR SLAB SECTIONS

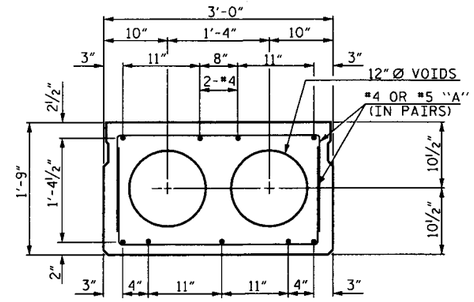

25' SPAN

7 - 0.6" Ø H.S. STRANDS
INTERIOR SLAB SECTIONS

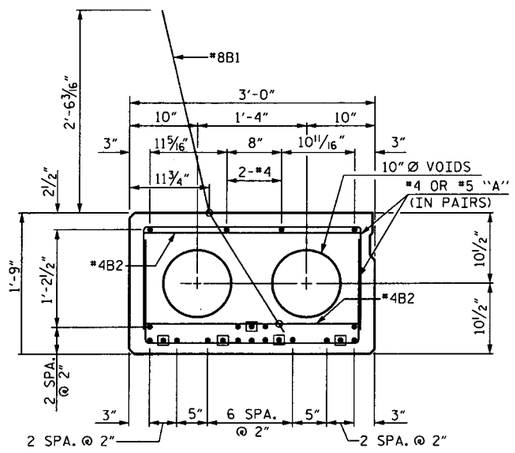

55' SPAN

20 - 0.6" Ø H.S. STRANDS
EXTERIOR SLAB SECTIONS

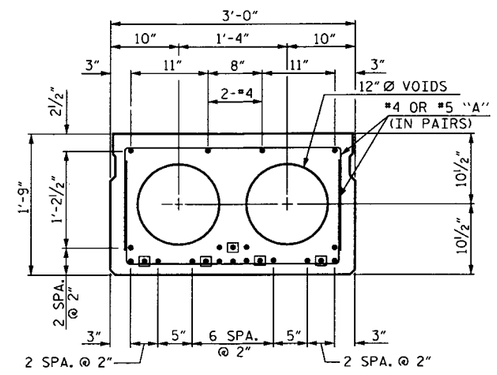

55' SPAN

20 - 0.6" Ø H.S. STRANDS
INTERIOR SLAB SECTIONS

⊞ DENOTES SHEATHED STRAND
(SEE SHEATH CHART)

GENERAL NOTES

ASSUMED LIVE LOAD = HS 20 OR ALTERNATE LOADING. EXCEPT THAT CORED SLAB UNITS HAVE BEEN DESIGNED FOR HS-25.

CONCRETE = f'c - 5000psi 25' SPAN ONLY (MIN. COMP. STRENGTH @ 28 DAYS).
f'ci - 4000psi 25' SPAN ONLY (MIN. COMP. STRENGTH @ TRANSFER OF STRESSING FORCE).

CONCRETE = f'c - 7000psi 55' SPAN ONLY (MIN. COMP. STRENGTH @ 28 DAYS).
f'ci - 5500psi 55' SPAN ONLY (MIN. COMP. STRENGTH @ TRANSFER OF STRESSING FORCE).

ALL PRESTRESSING STRANDS SHALL MEET THE REQUIREMENTS OF ASTM A416.

ALL PRESTRESSING STRANDS SHALL BE 7-WIRE LOW RELAXATION GRADE HIGH STRENGTH CABLES IN ACCORDANCE WITH THE STANDARD SPECIFICATIONS.

SIZE	TYPE	AREA	ULTIMATE STR.	APPLIED FORCE
0.6" Ø	HIGH STR.	0.217 SQ. IN. PER CABLE	58,590 LBS.	43,940 LBS. PER CABLE

EXP. JT. MAT'L. SHALL MEET THE REQUIREMENTS OF AASHTO SPECIFICATION M153 TYPE I, II, OR III.

JOINT SEALER SHALL BE LOW MODULUS SILICONE SEALANT. SEE SECTION 1028-4 OF THE STANDARD SPECIFICATIONS.

STRUCTURAL STEEL ITEMS SHALL BE OF A GRADE CONFORMING TO EITHER ASTM A36 OR A373, EXCEPT HIGH STRENGTH BOLTS. HIGH STRENGTH BOLTS SHALL BE ASTM A325. ALL STRUCTURAL STEEL SHALL BE GALVANIZED AS PER THE SPECIFICATION.

ALL MATERIAL AND WORKMANSHIP SHALL COMPLY WITH THE APPLICABLE REQUIREMENNTS OF THE STANDARD SPECIFICATIONS FOR ROADS AND STRUCTURES OF THE NC DEPARTMENT OF TRANSPORTATION DATED JANUARY 2006 AND WITH THE SPECIAL PROVISIONS.

THE CONTRACTOR, AT HIS OPTION, MAY USE STRESS RELIEVED STRANDS IN LIEU OF LOW RELAXATION STRANDS. DESIGN AND STRAND PATTERN MUST PROVIDE AT LEAST THE SAME NET COMPRESSIVE STRESS AFTER THE LOSSES.

THE ULTIMATE STRENGTH OF THE CORED SLAB UNIT MUST MEET THE REQUIREMENTS OF THE APPLICABLE AASHTO SPECIFICATIONS. STRESS RELIEVED STRANDS SHALL BE TENSIONED AND ANCHORED AT A LOAD EQUAL TO 70% OF ITS ULTIMATE STRENGTH. THIS APPLIED PRESTRESSED FORCE SHALL BE SHOWN ON THE PLANS. SIZE OF STRESS RELIEVED STRANDS SHALL NOT BE SMALLER THAN THOSE SHOWN FOR LOW RELAXATION STRANDS. DESIGN AND DETAIL PLANS USING STRESS RELIEVED STRANDS MUST BE SUBMITTED TO THE ENGINEER. ANY ADDITIONAL COST DUE TO THE USE OF STRESS RELIEVED STRANDS WILL BE PAID FOR BY THE CONTRACTOR. STRANDS SHALL BE CUT FLUSH WITH THE ENDS OF THE SLABS AND EPOXY COATED. SEE SPECIAL PROVISIONS.

A POSITIVE HOLD-DOWN SYSTEM MUST BE EMPLOYED TO PREVENT VOIDS FROM RISING.

SPIRAL WIRE REINFORCEMENT MAY BE USED IN LIEU OF DEFORMED BARS FOR STIRRUPS. (MIN. W3.5 x 6" PITCH).

UNLESS OTHERWISE NOTED ON THE PLANS, ALL EXPOSED CORNERS ON STRUCTURES SHALL BE CHAMFERED 3/4".

FOR DEFLECTION TABLE, SEE "PRECAST CONCRETE BARRIER RAIL SECTIONS" SHEET.

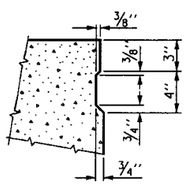

SHEAR KEY DETAIL

NOTE: OMIT SHEAR KEY ON OUTSIDE OF EXTERIOR CORED SLAB

SHEATH CHART

SPAN LENGTH	NUMBER OF SHEATHED STRANDS PER EXTERIOR SLAB SECTIONS	NUMBER OF SHEATHED STRANDS PER INTERIOR SLAB SECTIONS
25'	0	0
55'	5	5

BOND SHALL BE BROKEN ON THESE STRANDS FOR A DISTANCE OF 5'-0" FROM END OF SLAB

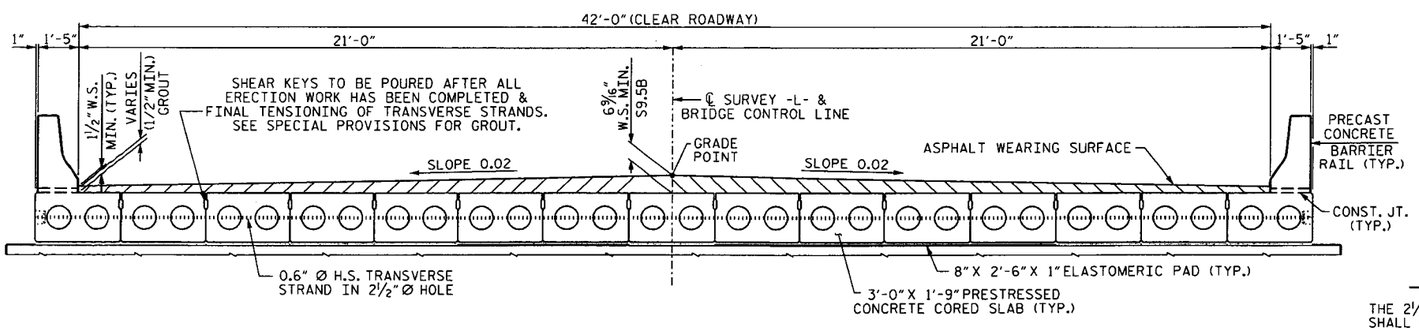

TYPICAL SECTION

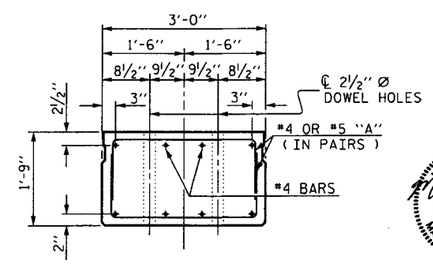

SLAB END ELEVATION

THE 2 1/2" Ø DOWEL HOLES AT FIXED ENDS OF SLAB SECTIONS SHALL BE FILLED WITH GROUT. SEE SPECIAL PROVISIONS.

NORTH CAROLINA PROFESSIONAL SEAL 023908 ENGINEER MARK A. AVERETTE 9-28-11

PLANS PREPARED BY:

SIMPSON ENGINEERS & ASSOCIATES
5520 Dillard Drive
Suite 120
Cary, NC 27518
(919) 852-0468
(919) 852-0598 (Fax)
www.simpsonengr.com
LICENSURE NO. C-2521

WBS NO. 33575.3.1

PITT COUNTY

STATION: 16+14.55 -L-

REPLACES BRIDGE NO. 9

STATE OF NORTH CAROLINA
DEPARTMENT OF TRANSPORTATION
RALEIGH

PRESTRESSED CORED SLAB DETAILS 25' & 55' SPANS

42' CLEAR ROADWAY-105° SKEW

REVISIONS						SHEET NO.
NO.	BY:	DATE:	NO.	BY:	DATE:	18
1			3			TOTAL SHEETS
2			4			32

DRAWN BY : D. G. VESTER DATE : 6-08
CHECKED BY : M. A. AVERETTE DATE : 6-08

4/28/2011 2:29:47 PM g:\projects\bmu\pitt 9\drawings\B4232_sd_ts_01.dgn

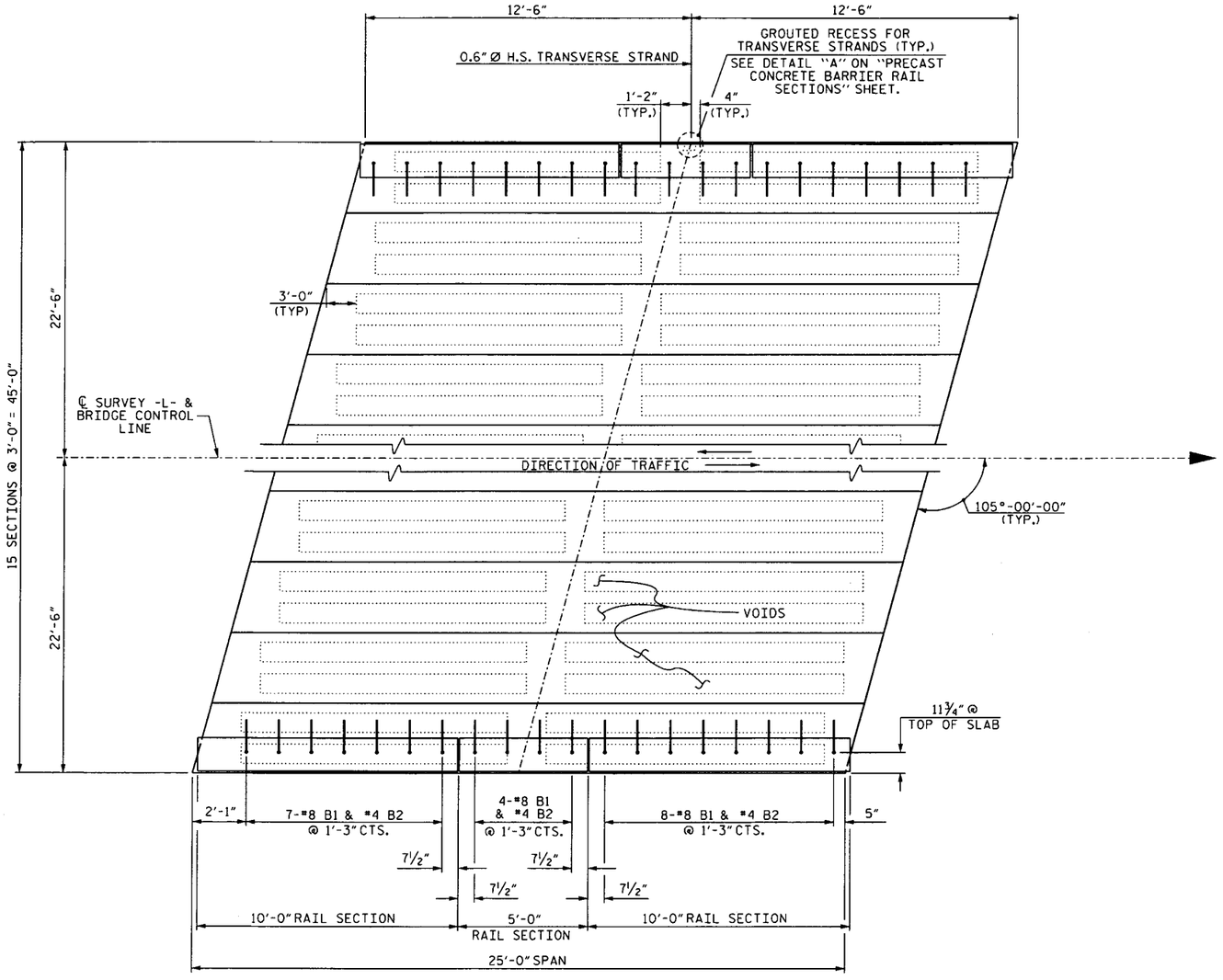

PLAN OF SPAN

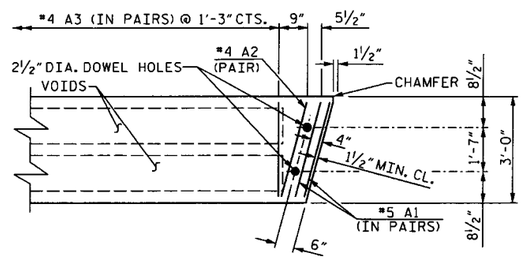

PART PLAN - SLAB SECTION

WBS NO. 33575.3.1

PITT COUNTY

STATION: 16+14.55 -L-

REPLACES BRIDGE NO. 9

STATE OF NORTH CAROLINA
DEPARTMENT OF TRANSPORTATION
RALEIGH

PRESTRESSED CORED SLAB 25' SPAN

42' CLEAR ROADWAY-105° SKEW

NORTH CAROLINA PROFESSIONAL SEAL 023908 ENGINEER MARK A. AVERETTE 7-29-11

PLANS PREPARED BY:

SIMPSON ENGINEERS & ASSOCIATES
5520 Dillard Drive
Suite 120
Cary, NC 27518
(919) 852-0468
(919) 852-0598 (Fax)
www.simpsonengr.com
LICENSURE NO. C-2521

REVISIONS						SHEET NO.
NO.	BY:	DATE:	NO.	BY:	DATE:	19
1			3			TOTAL SHEETS
2			4			32

DRAWN BY : D. G. VESTER DATE : 6-08
CHECKED BY : M. A. AVERETTE DATE : 6-08

4/28/2011 2:29:49 PM g:\projects\bmu\pitt 9\drawings\B4232_sd_csi_01.dgn

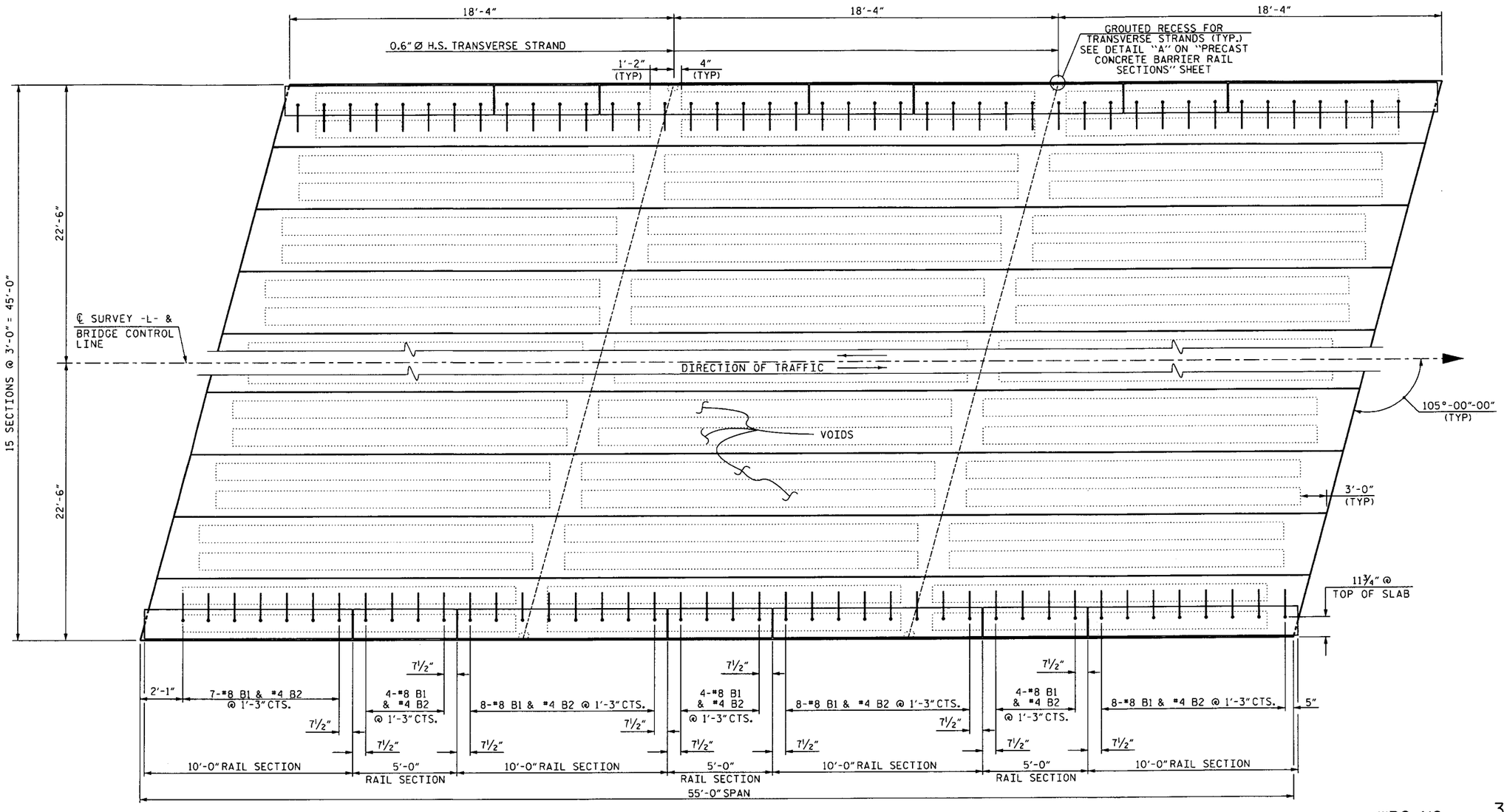

PLAN OF SPAN

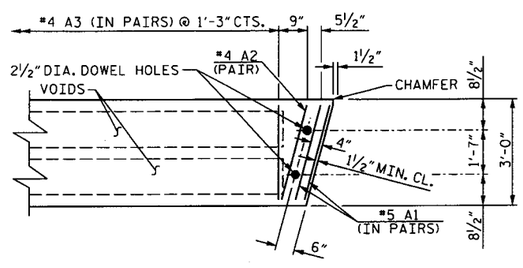

PART PLAN - SLAB SECTION

WBS NO. 33575.3.1

PITT COUNTY

STATION: 16+14.55 -L-

REPLACES BRIDGE NO. 9

STATE OF NORTH CAROLINA
DEPARTMENT OF TRANSPORTATION
RALEIGH

PRESTRESSED CORED SLAB 55' SPAN

42' CLEAR ROADWAY-105° SKEW

NORTH CAROLINA PROFESSIONAL SEAL 023908 ENGINEER MARK A. AVERETTE 4-28-11

PLANS PREPARED BY:

SIMPSON ENGINEERS & ASSOCIATES
5520 Dillard Drive
Suite 120
Cary, NC 27518
(919) 852-0468
(919) 852-0598 (Fax)
www.simpsonengr.com
LICENSURE NO. C-2521

REVISIONS						SHEET NO.
NO.	BY:	DATE:	NO.	BY:	DATE:	20
1			3			TOTAL SHEETS
2			4			32

DRAWN BY : D. G. VESTER DATE : 6-08
CHECKED BY : M. A. AVERETTE DATE : 6-08

4/28/2011 2:36:37 PM g:\projects\bmu\pit+ 9\drawings\84232_sd_cs2_01.dgn

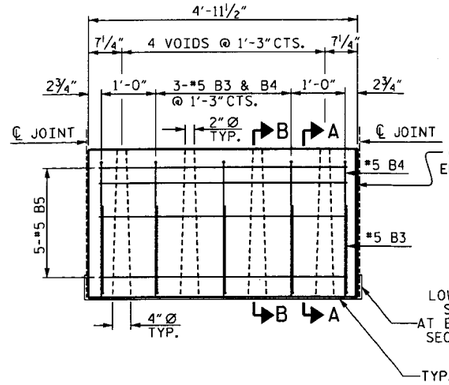

TYPICAL 5'-0" PRECAST UNIT

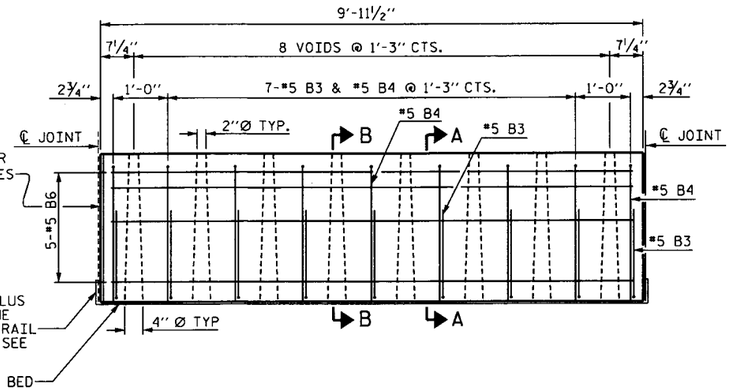

TYPICAL 10'-0" PRECAST UNIT

NOTES

EACH PRECAST RAIL UNIT SHALL BE CAST WITH CLASS AA CONCRETE.

RAIL TO BE FLUSH WITH CORED SLAB UNITS AT EACH END OF SPAN.

EACH PRECAST RAIL UNIT SHALL BE SUPPLIED WITH LIFTING DEVICE(S). NO CABLES ARE TO BE WRAPPED AROUND THE RAIL UNITS FOR LIFTING.

THE EXPANSION JOINT SEALER SHALL BE LOW MODULUS SILICONE SEALANT. SEE SECTION 1028-4 OF THE STANDARD SPECIFICATIONS.

CONCRETE CHAMFERS:
UNLESS OTHERWISE NOTED ON THE PLANS, ALL EXPOSED CORNERS ON STRUCTURES SHALL BE CHAMFERED ¾" WITH THE FOLLOWING EXCEPTIONS: TOP CORNERS OF CURBS MAY BE ROUNDED TO 1½" RADIUS WHICH IS BUILT INTO CURB FORMS; CORNERS OF TRANSVERSE FLOOR EXPANSION JOINTS SHALL BE ROUNDED WITH A ¼" FINISHING TOOL UNLESS OTHERWISE REQUIRED ON PLANS; AND CORNERS OF EXPANSION JOINTS IN THE ROADWAY FACES AND TOPS OF CURBS AND SIDEWALKS SHALL BE ROUNDED TO A ¼" RADIUS WITH A FINISHING STONE OR TOOL UNLESS OTHERWISE ON PLANS.

GROUT SHALL BE 5" ABOVE GROUT BED BETWEEN RAIL SECTIONS EXCEPT AT END BENTS WHERE LOW MODULUS SILICON SHALL BE SUBSTITUTED IN PLACE OF GROUT.

NO DECK DRAINS ALLOWED.

BILL OF MATERIAL FOR ONE 5'-0" RAIL SECTION

BAR	NO.	SIZE	TYPE	LENGTH	WEIGHT
B3	5	#5	1	2'-8"	14
B4	5	#5	2	4'-11"	26
B5	5	#5	STR.	4'-7"	24
REINFORCING STEEL LBS. =					64
CLASS AA CONCRETE CU. YDS. =					0.5

BILL OF MATERIAL FOR ONE 10'-0" RAIL SECTION

BAR	NO.	SIZE	TYPE	LENGTH	WEIGHT
B3	9	#5	1	2'-8"	25
B4	9	#5	2	4'-11"	46
B6	5	#5	STR.	9'-7"	50
REINFORCING STEEL LBS. =					121
CLASS AA CONCRETE CU. YDS. =					1.0

BAR TYPES

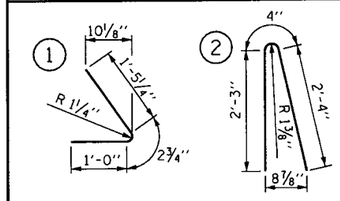

ALL BAR DIMENSIONS ARE OUT TO OUT

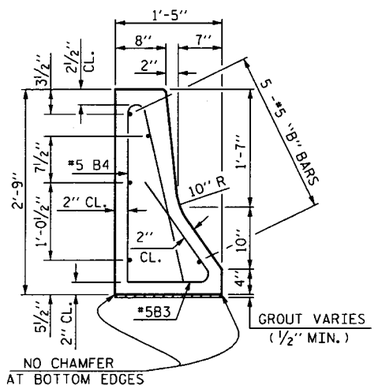

SECTION A-A

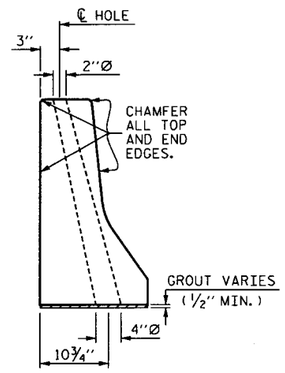

SECTION B-B

INTERIOR SLAB UNIT	25'	55'
CAMBER (SLAB UNIT ALONE IN PLACE)	⅛" (UP)	2⅝" (UP)
DEFLECTION (SUPERIMPOSED DEAD LOAD)	* 0" (DOWN)	* 7/16" (DOWN)
FINAL DEFLECTION	⅛" (UP)	2³⁄₁₆" (UP)

* INCLUDES FUTURE WEARING SURFACE

EXTERIOR SLAB UNIT	25'	55'
CAMBER (SLAB UNIT ALONE IN PLACE)	⅛" (UP)	2⅜" (UP)
DEFLECTION (SUPERIMPOSED DEAD LOAD)	* 0" (DOWN)	* 7/16" (DOWN)
FINAL DEFLECTION	⅛" (UP)	1¹⁵⁄₁₆" (UP)

* INCLUDES FUTURE WEARING SURFACE

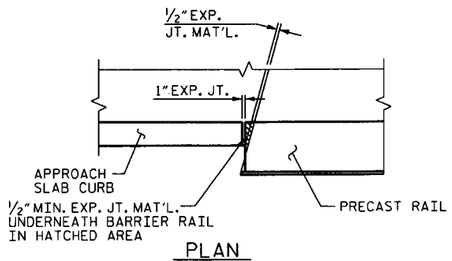

PLAN

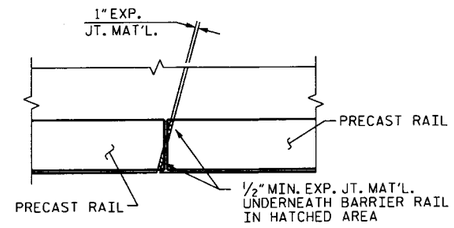

PLAN

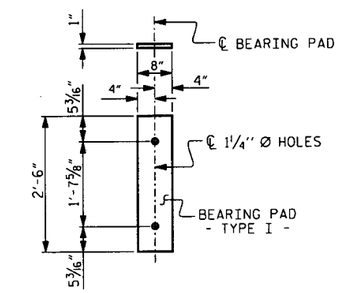

FIXED END
(TYPE I - 60 REQ'D)

ELASTOMERIC BEARING DETAILS

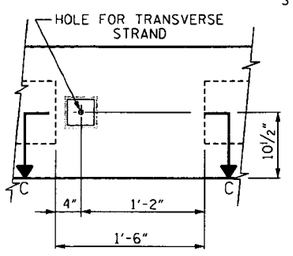

ELEVATION

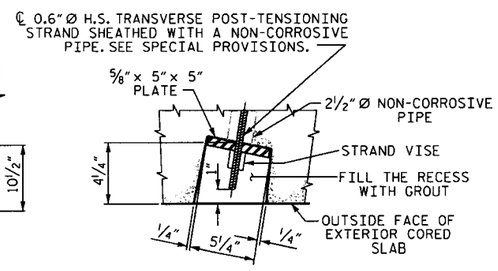

SECTION C-C

DETAIL A
GROUTED RECESS AT END OF POST-TENSIONED STRAND CORED SLAB

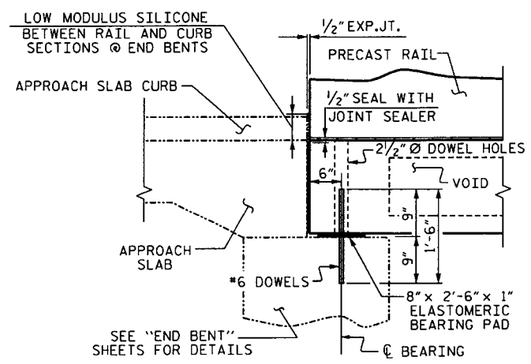

ELEVATION
SECTION AT END BENT

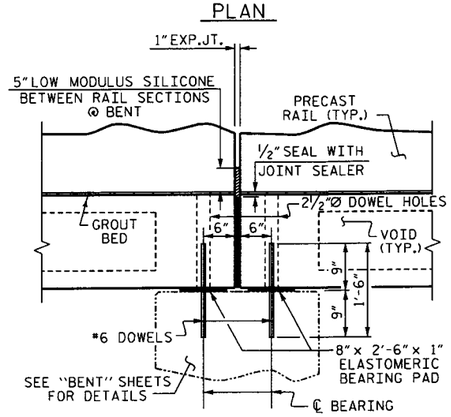

ELEVATION
SECTION AT BENT

WBS NO. 33575.3.1
PITT COUNTY
STATION: 16+14.55 -L-

REPLACES BRIDGE NO. 9

NORTH CAROLINA PROFESSIONAL SEAL 023908 ENGINEER MARK A. AVERETTE 4-28-11

PLANS PREPARED BY:
SIMPSON ENGINEERS & ASSOCIATES
5520 Dillard Drive
Suite 120
Cary, NC 27518
(919) 852-0468
(919) 852-0598 (Fax)
www.simpsonengr.com
LICENSURE NO. C-2521

STATE OF NORTH CAROLINA
DEPARTMENT OF TRANSPORTATION
RALEIGH

PRECAST CONCRETE BARRIER RAIL SECTIONS 25' & 55' SPANS

42' CLEAR ROADWAY-105° SKEW

REVISIONS						SHEET NO.
NO.	BY:	DATE:	NO.	BY:	DATE:	21
1			3			TOTAL SHEETS
2			4			32

DRAWN BY: D. G. VESTER DATE: 6-08
CHECKED BY: M. A. AVERETTE DATE: 6-08

4/28/2011 2:36:39 PM g:\projects\bmu\pitt 9\drawings\84232.sd.br.01.dgn

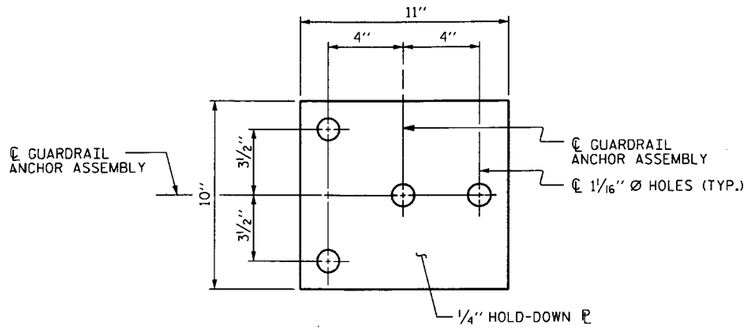

PLAN

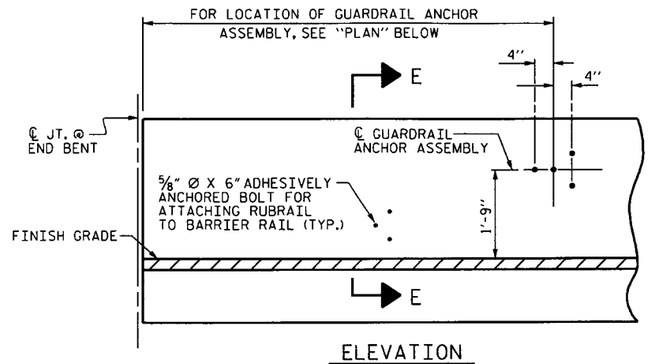

ELEVATION

FOR LOCATION OF RUBRAIL, SEE ROADWAY STD. 862.03

NOTES

THE GUARDRAIL ANCHOR ASSEMBLY SHALL CONSIST OF A ¼" HOLD DOWN PLATE AND 4 - ⅞" Ø BOLTS WITH NUTS AND WASHERS, RUBRAIL, AND ADHESIVELY ANCHORED BOLTS.

THE HOLD-DOWN PLATE SHALL CONFORM TO AASHTO M270 GRADE 36. AFTER FABRICATION, THE HOLD-DOWN PLATE SHALL BE HOT-DIP GALVANIZED IN ACCORDANCE WITH AASHTO M111.

BOLTS SHALL CONFORM TO THE REQUIREMENTS OF ASTM A307 AND NUTS SHALL CONFORM TO THE REQUIREMENTS OF AASHTO M291. BOLTS, NUTS AND WASHERS SHALL BE GALVANIZED. (AT THE CONTRACTOR'S OPTION, STAINLESS STEEL BOLTS, NUTS AND WASHERS MAY BE USED AS AN ALTERNATE FOR THE ⅞" Ø GALVANIZED BOLTS, NUTS AND WASHERS. THEY SHALL CONFORM TO OR EXCEED THE MECHANICAL REQUIREMENTS OF ASTM A307. THE USE OF THIS ALTERNATE SHALL BE APPROVED BY THE ENGINEER.)

THE GUARDRAIL ANCHOR ASSEMBLY IS REQUIRED AT ALL POINTS WHERE APPROACH GUARDRAIL IS TO BE ATTACHED TO THE END OF BARRIER RAIL. FOR POINTS OF ATTACHMENT, SEE SKETCH.

AFTER INSTALLATION, THE EXPOSED THREAD OF THE BOLT SHALL BE BURRED WITH A SHARP POINTED TOOL.

THE COST OF THE GUARDRAIL ANCHOR ASSEMBLY SHALL BE INCLUDED IN THE UNIT CONTRACT PRICE BID FOR CONCRETE BARRIER RAIL.

THE 1 ¼" Ø HOLES SHALL BE FORMED OR DRILLED WITH A CORE BIT. IMPACT TOOLS WILL NOT BE PERMITTED. ANY CONCRETE DAMAGED BY THIS WORK SHALL BE REPAIRED TO THE SATISFACTION OF THE ENGINEER.

THE C6 X 8.2 RUBRAIL IS TO BE ADHESIVELY ANCHORED TO THE RAIL USING THREE ⅝" Ø X 6" BOLTS WITH WASHERS. SEE ROADWAY STANDARD 862.03 FOR DETAILS AND LOCATION OF THE RUBRAIL.

FOR ADDITIONAL GUARDRAIL INFORMATION, SEE SHEET NO. 4.

FOR IA-350 ATTENUATOR TO BE USED AT END BENT #2, SEE MANUFACTURER DETAILS FOR ADDITTIONAL INFORMATION.

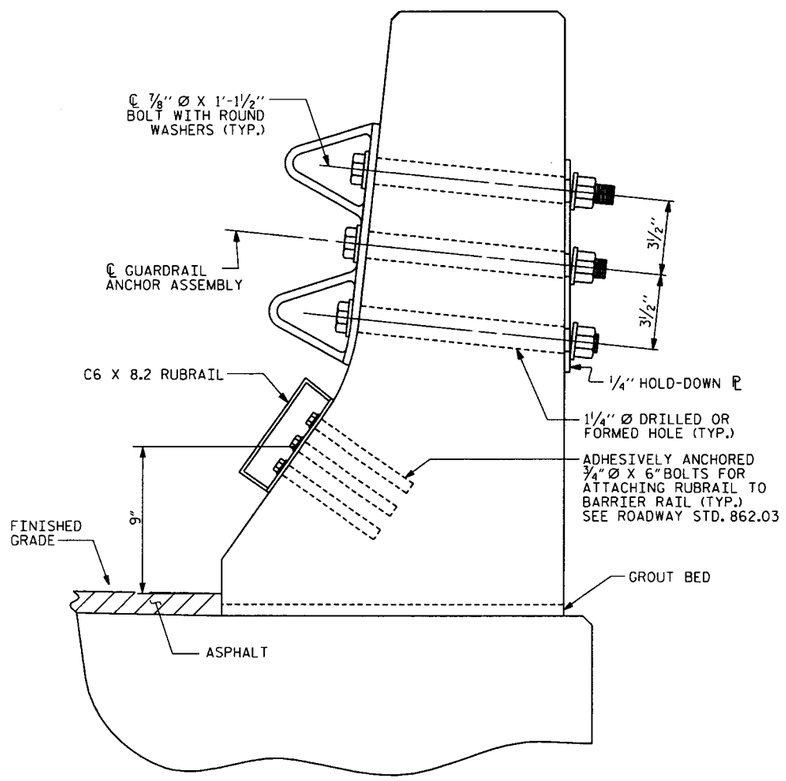

SECTION E-E

GUARDRAIL ANCHOR ASSEMBLY DETAILS

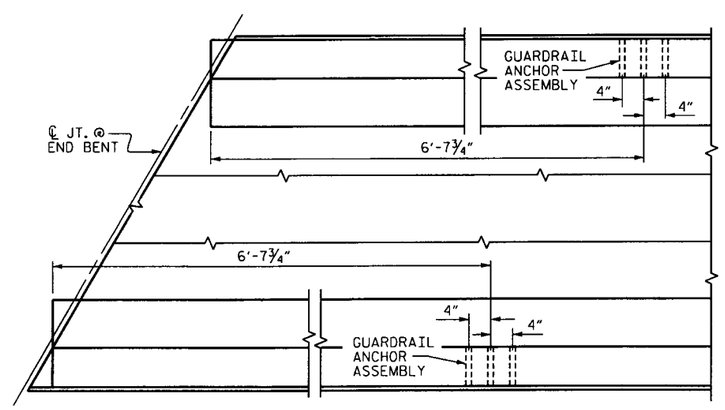

PLAN

LOCATION OF ANCHORS FOR GUARDRAIL

END BENT #1 SHOWN

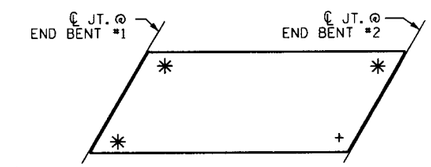

SKETCH SHOWING POINTS OF ATTACHMENTS

✳ DENOTES GUARDRAIL ANCHOR ASSEMBLY

\+ DENOTES IA-350 ATTENUATOR

WBS NO. 33575.3.1

PITT COUNTY

STATION: 16+14.55 -L-

REPLACES BRIDGE NO. 9

NORTH CAROLINA PROFESSIONAL SEAL 023908 ENGINEER MARK A. AVERETTE
4-28-11

PLANS PREPARED BY:

SIMPSON ENGINEERS & ASSOCIATES
5520 Dillard Drive
Suite 120
Cary, NC 27518
(919) 852-0468
(919) 852-0598 (Fax)
www.simpsonengr.com
LICENSURE NO. C-2521

STATE OF NORTH CAROLINA
DEPARTMENT OF TRANSPORTATION
RALEIGH

GUARDRAIL ANCHORAGE FOR BARRIER RAIL

42' CLEAR ROADWAY-105° SKEW

REVISIONS						SHEET NO.
NO.	BY:	DATE:	NO.	BY:	DATE:	22
1			3			TOTAL SHEETS
2			4			32

DRAWN BY : D. G. VESTER DATE : 6-08
CHECKED BY : M. A. AVERETTE DATE : 6-08

4/28/2011 2:36:41 PM g:\projects\bmu\pitt 9\drawings\84232_sd_gr_01.dgn

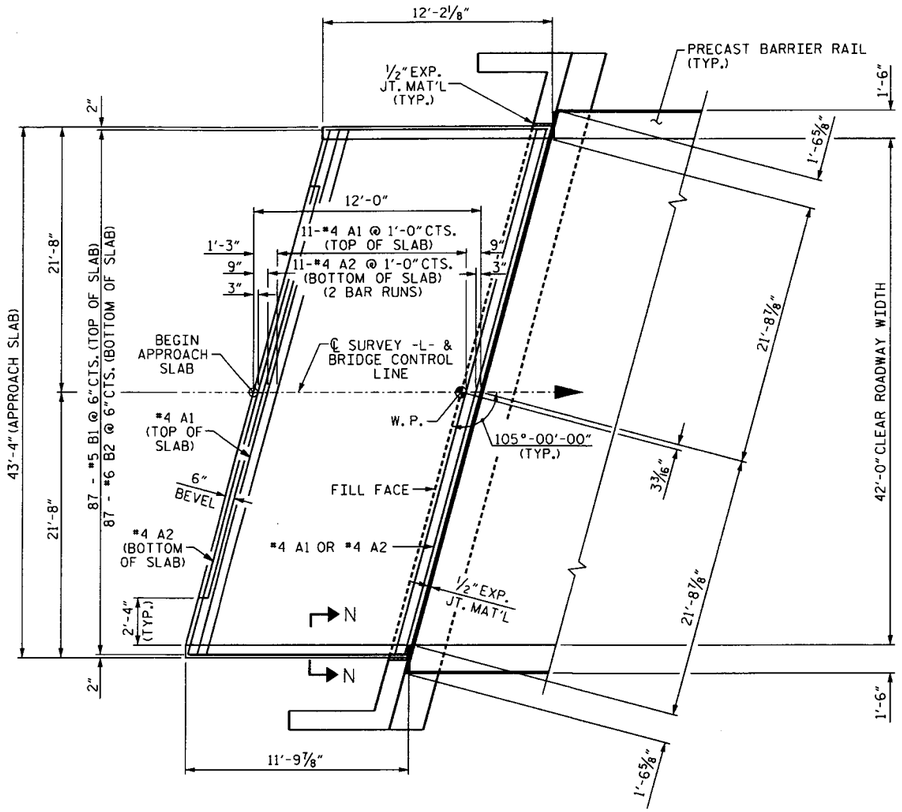

PLAN OF APPROACH SLAB

BEGIN APPROACH SLAB SHOWN
END APPROACH SLAB SIMILAR

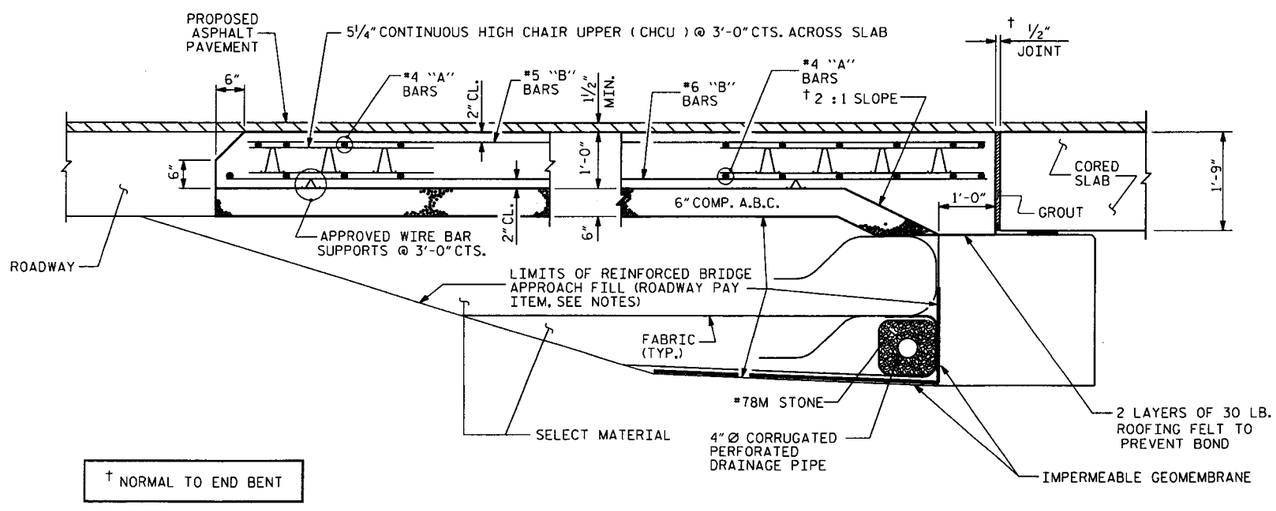

† NORMAL TO END BENT

SECTION THRU SLAB

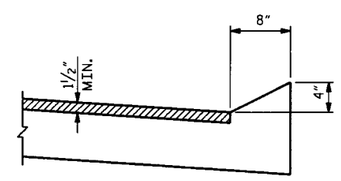

SECTION N-N

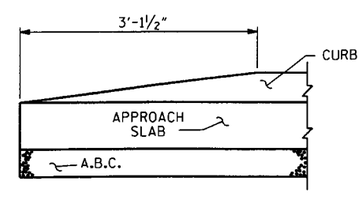

END OF CURB WITHOUT SHOULDER BERM GUTTER

CURB DETAILS

NOTES

FOR REINFORCED BRIDGE APPROACH FILL INCLUDING FABRIC, IMPERMEABLE GEOMEMBRANE, 4" Ø DRAINAGE PIPE, #78M STONE, AND SELECT MATERIAL, SEE ROADWAY PLANS.

AREA BETWEEN THE WINGWALL AND APPROACH SLAB SHALL BE GRADED TO DRAIN THE WATER AWAY FROM THE FILL FACE OF THE BRIDGE AND SHALL BE PAVED. SEE ROADWAY PLANS.

THE 6" COMP. A.B.C. SHALL BE FLUSH WITH THE ROADWAY END OF THE APPROACH SLAB AND SHALL EXTEND 1'-0" OUTSIDE OF EACH EDGE OF THE APPROACH SLAB.

THE CONTRACTOR MAY USE 4" TYPE B-25.0B ASPHALT CONCRETE BASE COURSE IN LIEU OF 6" COMP. A.B.C. IF THIS OPTION IS USED, THE BASE COURSE SHALL BE FLUSH WITH THE ROADWAY END OF THE APPROACH SLAB, AND THE WIDTH SHALL BE THE SAME AS THAT OF THE APPROACH SLAB.

THE CONTRACTOR MAY USE 5" CLASS "A" CONCRETE BASE IN LIEU OF 6" COMP. A.B.C. IF THIS OPTION IS USED, THE CONCRETE BASE SHALL BE FLUSH WITH THE ROADWAY END OF THE APPROACH SLAB, AND THE WIDTH SHALL BE THE SAME AS THAT OF THE APPROACH SLAB. THE CONCRETE SHALL BE FINISHED TO A SMOOTH SURFACE AND A LAYER OF 30 LB ROOFING FELT SHALL BE PLACED BETWEEN THE CONCRETE BASE AND THE APPROACH SLAB TO PREVENT BOND. THE APPROACH SLAB SHALL NOT BE CAST UNTIL THE CONCRETE BASE HAS REACHED AN AGE OF THREE CURING DAYS.

FOR JOINT DETAILS, SEE "PRESTRESSED CONCRETE CORED SLAB UNIT" SHEETS.

THE JOINT AT THE END BENT SHALL BE GROUTED AS SOON AS PRACTICAL AFTER THE CONSTRUCTION OF THE APPROACH SLABS.

APPROACH SLAB GROOVING IS NOT REQUIRED.

BILL OF MATERIAL

APPROACH SLAB AT EB #1

BAR	NO.	SIZE	TYPE	LENGTH	WEIGHT
* A1	26	4	STR	23'-4"	405
A2	26	4	STR	23'-4"	405
* B1	87	5	STR	11'-2"	1013
B2	87	6	STR	11'-8"	1525
REINFORCING STEEL				LBS.	1,930
* EPOXY COATED REINFORCING STEEL				LBS.	1,418
CLASS "AA" CONCRETE				C.Y.	22.7

APPROACH SLAB AT EB #2

BAR	NO.	SIZE	TYPE	LENGTH	WEIGHT
* A1	26	4	STR	23'-4"	405
A2	26	4	STR	23'-4"	405
* B1	87	5	STR	11'-2"	1013
B2	87	6	STR	11'-8"	1525
REINFORCING STEEL				LBS.	1,930
* EPOXY COATED REINFORCING STEEL				LBS.	1,418
CLASS "AA" CONCRETE				C.Y.	22.7

WBS NO. 33575.3.1
PITT COUNTY
STATION: 16+14.55 -L-

REPLACES BRIDGE NO. 9 — SHEET 1 OF 2

STATE OF NORTH CAROLINA
DEPARTMENT OF TRANSPORTATION
RALEIGH

APPROACH SLABS

42' CLEAR ROADWAY-105° SKEW

NORTH CAROLINA PROFESSIONAL SEAL 023908 ENGINEER MARK A. AVERETTE
7-28-11

PLANS PREPARED BY:
SIMPSON ENGINEERS & ASSOCIATES
5520 Dillard Drive
Suite 120
Cary, NC 27518
(919) 852-0468
(919) 852-0598 (Fax)
www.simpsonengr.com
LICENSURE NO. C-2521

REVISIONS								SHEET NO.
NO.	BY:	DATE:	NO.	BY:	DATE:			23
1			3					TOTAL SHEETS
2			4					32

DRAWN BY : D. G. VESTER DATE : 6-08
CHECKED BY : M. A. AVERETTE DATE : 6-08

4/28/2011 2:36:44 PM g:\projects\bmu\pitt 9\drawings\B4232_sd_as1_01.dgn

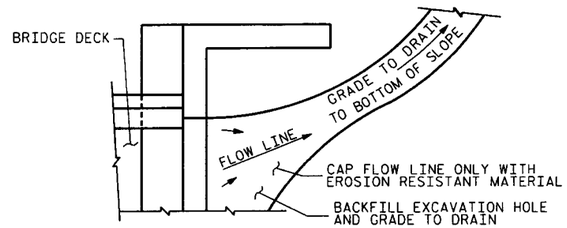

NOTE: IF THE APPROACH SLAB IS NOT CONSTRUCTED IMMEDIATELY AFTER THE BACKFILLING OF THE END BENT EXCAVATION, GRADE TO DRAIN TO THE BOTTOM OF THE SLOPE AND PROVIDE EROSION RESISTANT MATERIAL, SUCH AS FIBERGLASS ROVING OR AS DIRECTED BY THE ENGINEER TO PREVENT SOIL EROSION AND TO PROTECT THE AREA ADJACENT TO THE STRUCTURE. THE CONTRACTOR WILL BE REQUIRED TO REMOVE THESE MATERIALS PRIOR TO CONSTRUCTION OF THE APPROACH SLAB.

TEMPORARY DRAINAGE DETAIL

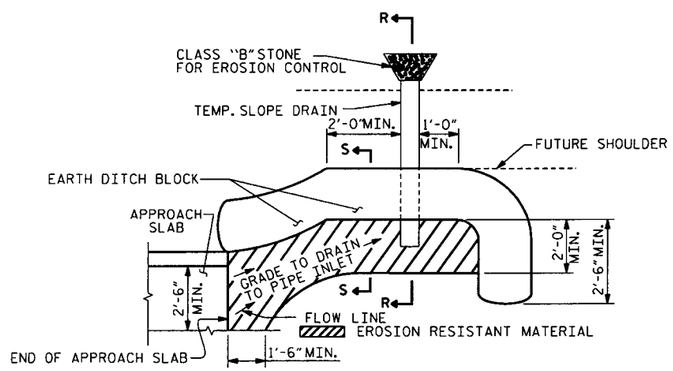

NOTE: IMMEDIATELY AFTER THE CONSTRUCTION OF THE APPROACH SLAB, THE CONTRACTOR SHALL PROVIDE TEMPORARY BERM AND SLOPE DRAIN. CONTRACTOR SHALL GRADE TO PIPE INLET AND PROVIDE EROSION RESISTANT MATERIAL AS SHOWN. THE EROSION RESISTANT MATERIAL SHALL BE EITHER 1) ASPHALT PLANT MIX, TYPE 1 OR TYPE 2, MIN. 2" DEPTH, 2) EROSION CONTROL MAT, OR 3) CONCRETE, AS DIRECTED BY THE ENGINEER. THE SLOPE DRAIN SHALL CONSIST OF A NON-PERFORATED TEMPORARY DRAINAGE PIPE, 12 INCHES IN DIAMETER.

PLAN VIEW

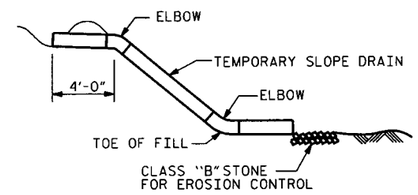

SECTION R-R

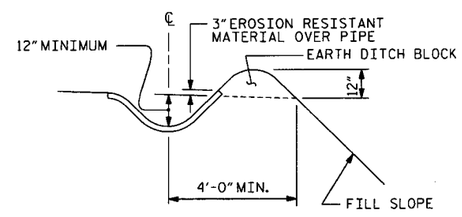

SECTION S-S

TEMPORARY BERM AND SLOPE DRAIN DETAILS

(TO BE USED WHEN SHOULDER BERM GUTTER IS REQUIRED)

WBS NO. 33575.3.1

PITT COUNTY

STATION: 16+14.55 -L-

REPLACES BRIDGE NO. 9 SHEET 2 OF 2

STATE OF NORTH CAROLINA
DEPARTMENT OF TRANSPORTATION
RALEIGH

APPROACH SLABS

42' CLEAR ROADWAY-105° SKEW

REVISIONS						SHEET NO.
NO.	BY:	DATE:	NO.	BY:	DATE:	24
1			3			TOTAL SHEETS
2			4			32

NORTH CAROLINA PROFESSIONAL SEAL 023908 ENGINEER MARK A. AVERETTE 4-28-11

PLANS PREPARED BY:

SIMPSON ENGINEERS & ASSOCIATES
5520 Dillard Drive
Suite 120
Cary, NC 27518
(919) 852-0468
(919) 852-0598 (Fax)
www.simpsonengr.com
LICENSURE NO. C-2521

DRAWN BY : D. G. VESTER DATE : 6-08
CHECKED BY : M. A. AVERETTE DATE : 6-08

4/28/2011 2:36:46 PM g:\projects\bmu\pitt 9\drawings\84232.sd.gs2.01.dgn

NOTES

STIRRUPS IN CAP MAY BE SHIFTED AS NECESSARY TO CLEAR #6 D1 DOWELS.

THE CONTRACTOR HAS THE OPTION TO OMIT THE LATERAL GUIDES IF APPROVED BY THE ENGINEER.

THE CONTRACTOR SHALL PROVIDE FOR INSTALLATION OF THE 4"Ø DRAIN PIPE THROUGH THE WING WALLS AS REQUIRED FOR REINFORCED APPROACH FILLS. REINFORCING STEEL IN THE WING WALLS MAY BE SHIFTED AS NECESSARY TO CLEAR THE DRAIN PIPE.

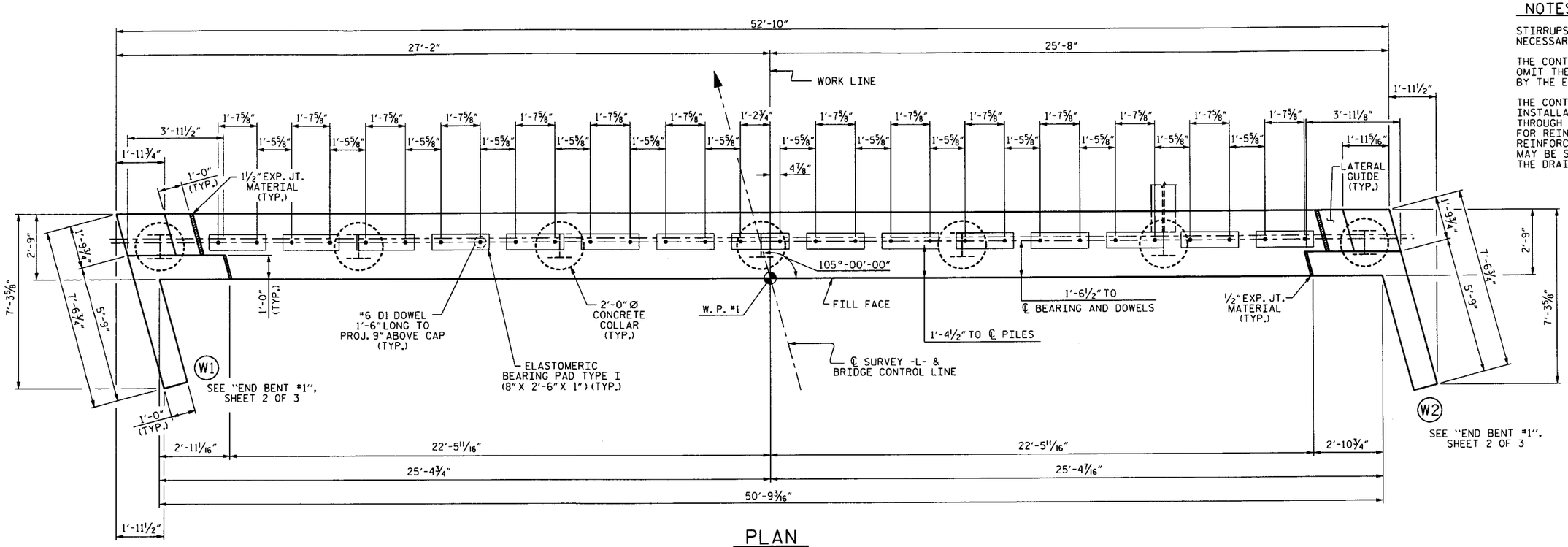

PLAN

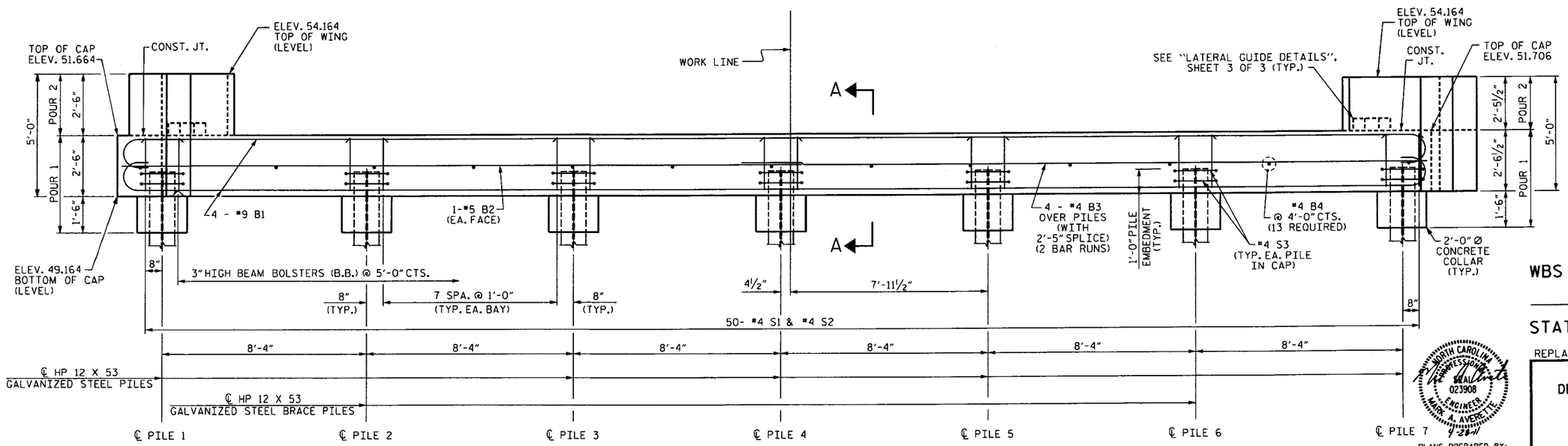

ELEVATION

WBS NO. 33575.3.1

PITT COUNTY

STATION: 16+14.55 -L-

REPLACES BRIDGE NO. 9 — SHEET 1 OF 3

STATE OF NORTH CAROLINA
DEPARTMENT OF TRANSPORTATION
RALEIGH

SUBSTRUCTURE

END BENT #1

42' CLEAR ROADWAY-105° SKEW

NORTH CAROLINA PROFESSIONAL SEAL 023908 ENGINEER MARK A. AVERETTE 4-28-11

PLANS PREPARED BY:

SIMPSON ENGINEERS & ASSOCIATES
5520 Dillard Drive
Suite 120
Cary, NC 27518
(919) 852-0468
(919) 852-0598 (Fax)
www.simpsonengr.com
LICENSURE NO. C-2521

REVISIONS							
NO.	BY:	DATE:	NO.	BY:	DATE:	SHEET NO.	25
1			3			TOTAL SHEETS	32
2			4				

DRAWN BY : D. G. VESTER DATE : 6-08
CHECKED BY : M. A. AVERETTE DATE : 6-08

4/28/2011 2:36:48 PM g:\projects\bmu\pitt 9\drawings\84232_sd_ebia_01.dgn

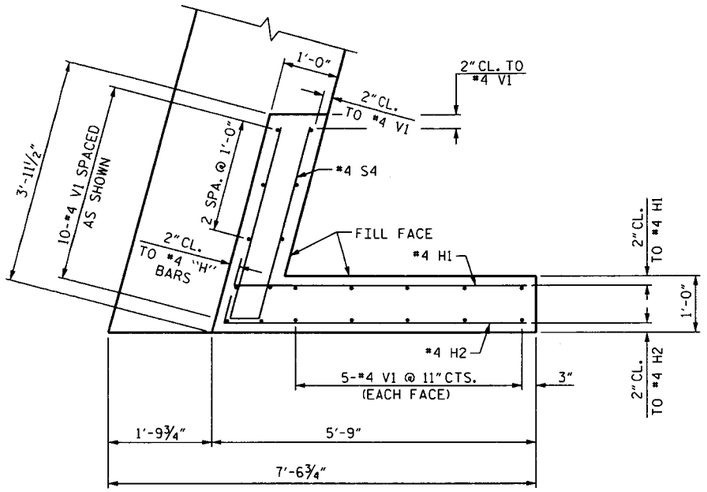

(W1) PLAN OF LEFT WING

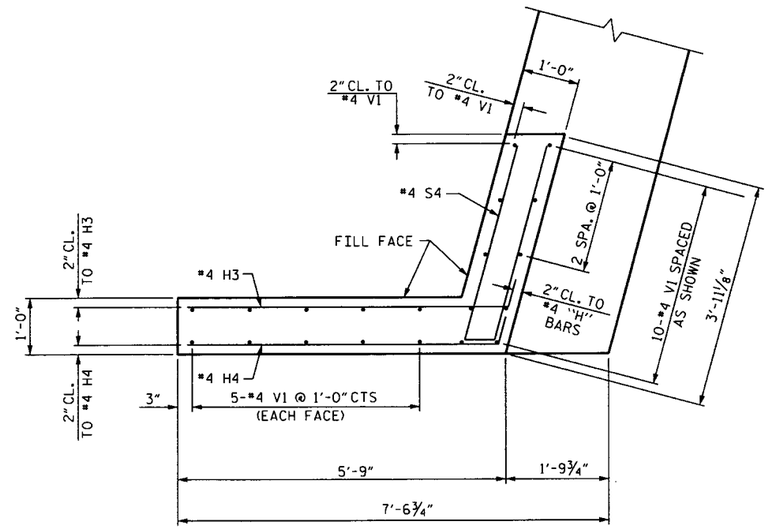

(W2) PLAN OF RIGHT WING

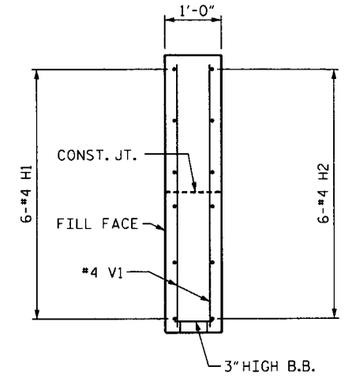

SECTION X-X

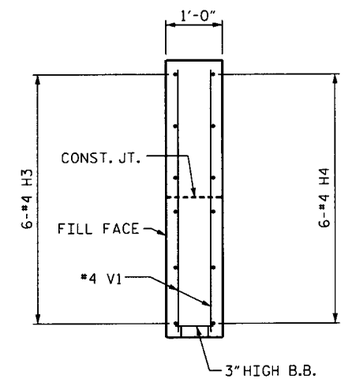

SECTION Y-Y

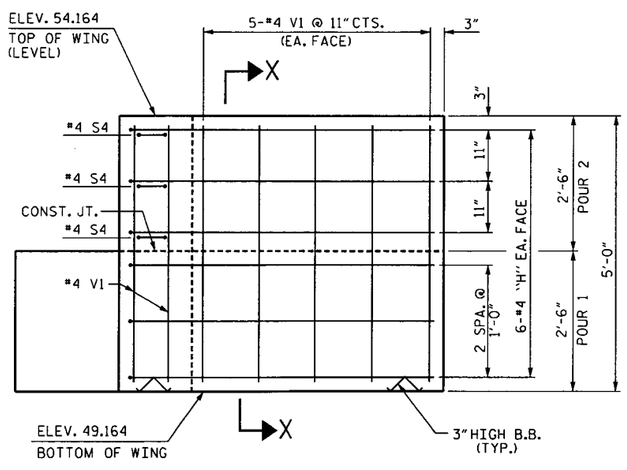

(W1) ELEVATION OF LEFT WING

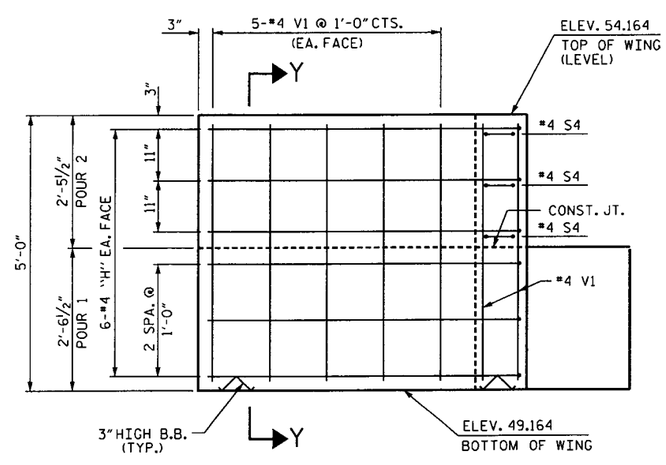

(W2) ELEVATION OF RIGHT WING

WBS NO. 33575.3.1

PITT COUNTY

STATION: 16+14.55 -L-

REPLACES BRIDGE NO. 9 SHEET 2 OF 3

NORTH CAROLINA PROFESSIONAL SEAL 023908 ENGINEER MARK A. AVERETTE 1-28-11

PLANS PREPARED BY:

SIMPSON ENGINEERS & ASSOCIATES

5520 Dillard Drive
Suite 120
Cary, NC 27518
(919) 852-0468
(919) 852-0598 (Fax)
www.simpsonengr.com

LICENSURE NO. C-2521

STATE OF NORTH CAROLINA
DEPARTMENT OF TRANSPORTATION
RALEIGH

SUBSTRUCTURE

END BENT #1

42' CLEAR ROADWAY-105° SKEW

REVISIONS							
NO.	BY:	DATE:	NO.	BY:	DATE:	SHEET NO.	26
1			3			TOTAL SHEETS	32
2			4				

DRAWN BY : D. G. VESTER DATE : 6-08
CHECKED BY : M. A. AVERETTE DATE : 6-08

4/28/2011 2:36:50 PM g:\projects\bmu\pitt 9\drawings\B4232_sd_eb1b_01.dgn

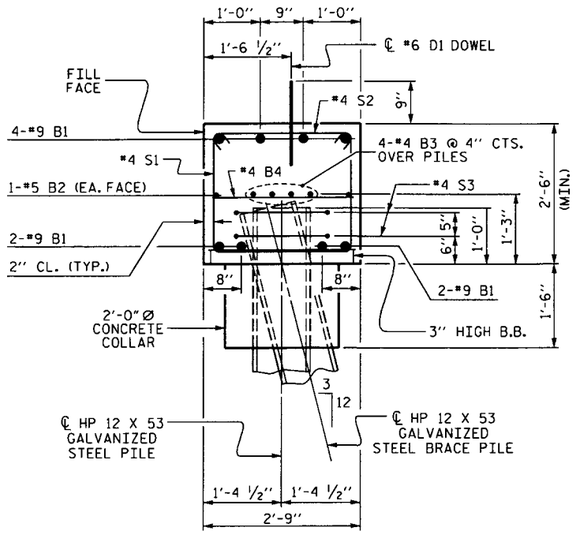

SECTION A-A

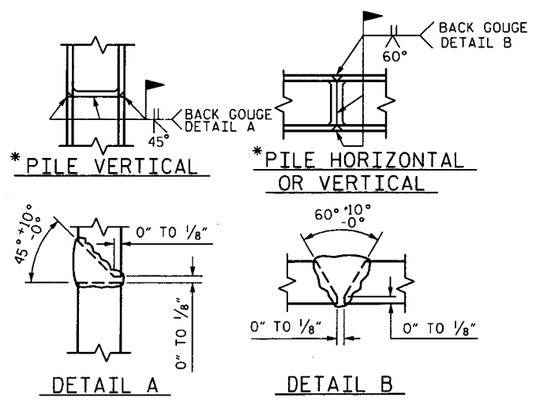

PILE SPLICE DETAILS

*POSITION OF PILE DURING WELDING.

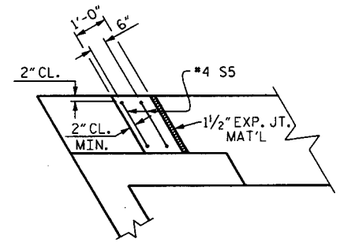

PLAN

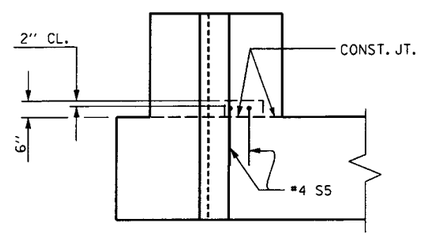

ELEVATION

LATERAL GUIDE DETAILS

BAR TYPES

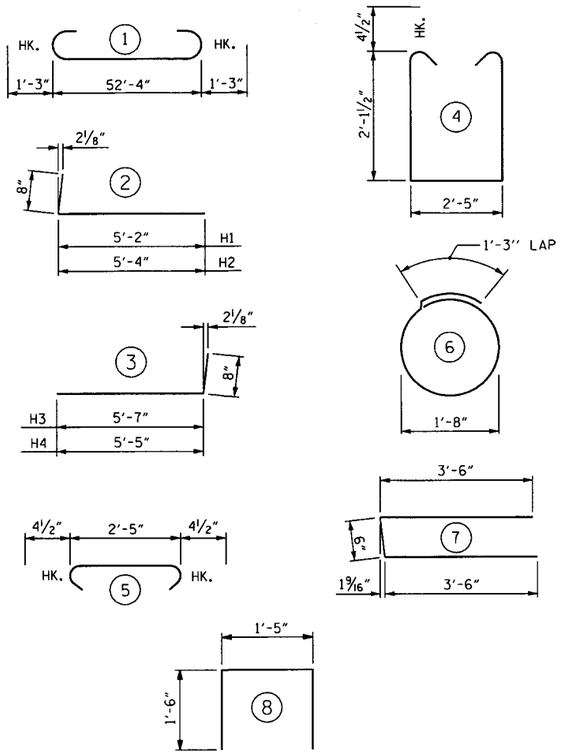

ALL BAR DIMENSIONS ARE OUT TO OUT

BILL OF MATERIAL

END BENT #1

BAR	NO.	SIZE	TYPE	LENGTH	WEIGHT
B1	8	9	1	54'-10"	1491
B2	2	5	STR	52'-6"	110
B3	8	4	STR	27'-6"	147
B4	13	4	STR	2'-5"	21
D1	30	6	STR	1'-6"	68
H1	6	4	2	5'-10"	23
H2	6	4	2	6'-0"	24
H3	6	4	3	6'-3"	25
H4	6	4	3	6'-1"	24
S1	50	4	4	7'-5"	248
S2	50	4	5	3'-2"	106
S3	14	4	6	6'-6"	61
S4	6	4	7	7'-6"	30
S5	4	4	8	4'-5"	12
V1	40	4	STR	4'-8"	125

TOTAL REINFORCING STEEL 2515 Lbs.

CLASS "A" CONCRETE BREAKDOWN

POUR #1	15.7 Cu. Yds.
POUR #2	1.6 Cu. Yds.
TOTAL	17.3 Cu. Yds.

HP 12 X 53 GALVANIZED STEEL PILES

7 PILES REQUIRED - LIN. FEET 420

WBS NO. 33575.3.1

PITT COUNTY

STATION: 16+14.55 -L-

REPLACES BRIDGE NO. 9

SHEET 3 OF 3

NORTH CAROLINA PROFESSIONAL SEAL 023908 ENGINEER MARK A. AVERETTE 4-28-11

PLANS PREPARED BY:

SIMPSON ENGINEERS & ASSOCIATES
5520 Dillard Drive
Suite 120
Cary, NC 27518
(919) 852-0468
(919) 852-0598 (Fax)
www.simpsonengr.com
LICENSURE NO. C-2521

STATE OF NORTH CAROLINA
DEPARTMENT OF TRANSPORTATION
RALEIGH

SUBSTRUCTURE

END BENT #1

42' CLEAR ROADWAY-105° SKEW

REVISIONS							
NO.	BY:	DATE:	NO.	BY:	DATE:	SHEET NO.	27
1			3			TOTAL SHEETS	32
2			4				

DRAWN BY : D. G. VESTER DATE : 6-08
CHECKED BY : M. A. AVERETTE DATE : 6-08

4/28/2011 2:36:52 PM g:\projects\bmu\pitt 9\drawings\B4232_sd_ebtc_01.dgn

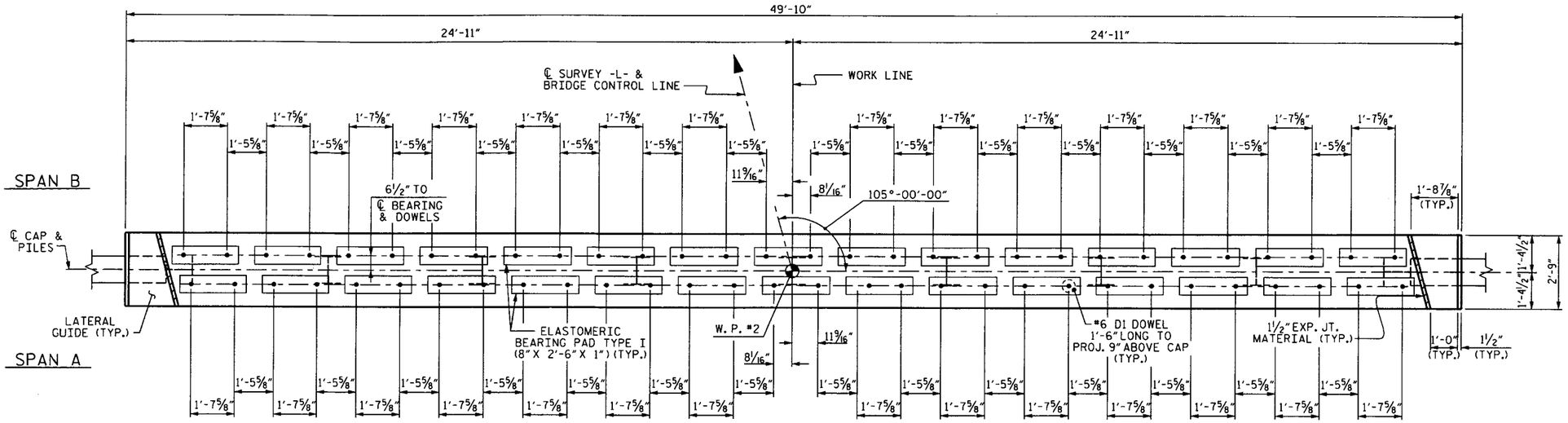

PLAN

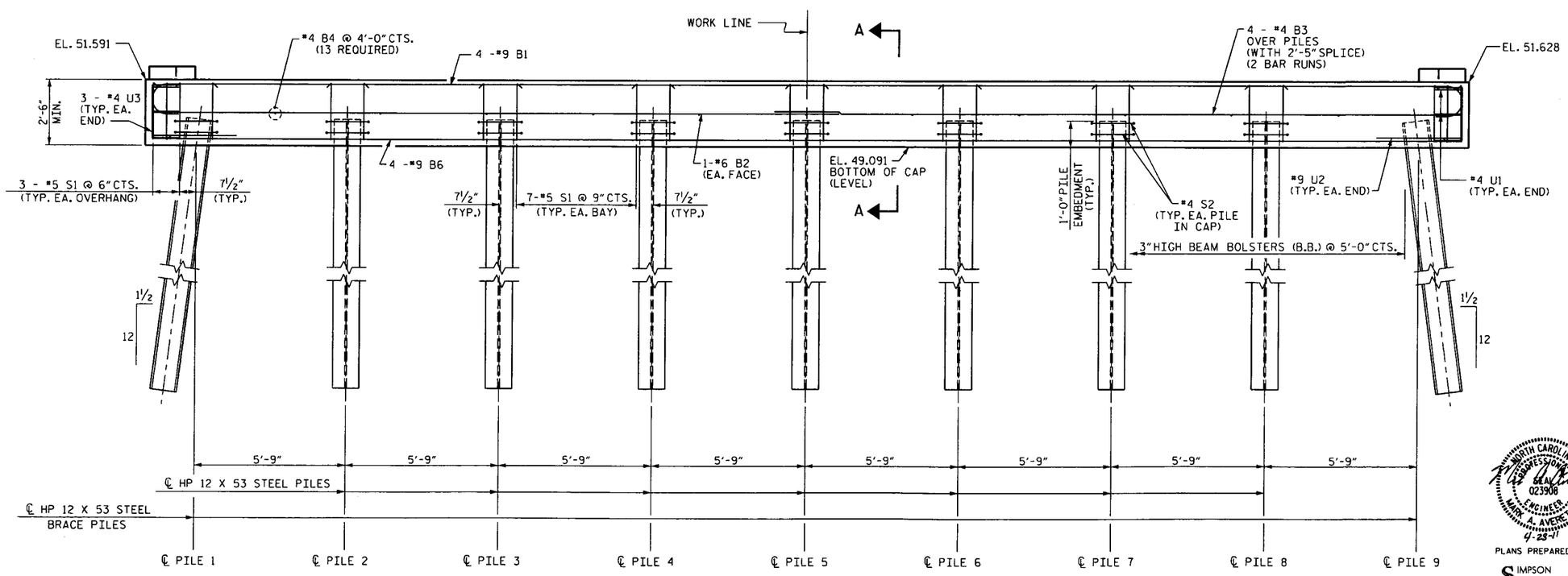

ELEVATION

NOTES

STIRRUPS IN CAP MAY BE SHIFTED AS NECESSARY TO CLEAR #6 DI DOWELS.

INVERT ALTERNATE STIRRUPS.

GALVANIZE THE TOP 25 FEET OF EACH INTERIOR BENT PILE IN ACCORDANCE WITH SECTION 1076 OF THE STANDARD SPECIFICATIONS.

THE CONTRACTOR HAS THE OPTION TO OMIT THE LATERAL GUIDES IF APPROVED BY THE ENGINEER.

WBS NO. 33575.3.1

PITT COUNTY

STATION: 16+14.55 -L-

REPLACES BRIDGE NO. 9 SHEET 1 OF 2

STATE OF NORTH CAROLINA
DEPARTMENT OF TRANSPORTATION
RALEIGH

SUBSTRUCTURE

BENT #1

42' CLEAR ROADWAY-105° SKEW

NORTH CAROLINA PROFESSIONAL SEAL 023908 ENGINEER MARK A. AVERETTE 9-23-11

PLANS PREPARED BY:

SIMPSON ENGINEERS & ASSOCIATES
5520 Dillard Drive
Suite 120
Cary, NC 27518
(919) 852-0468
(919) 852-0598 (Fax)
www.simpsonengr.com
LICENSURE NO. C-2521

REVISIONS						SHEET NO.
NO.	BY:	DATE:	NO.	BY:	DATE:	28
1			3			TOTAL SHEETS
2			4			32

DRAWN BY : D. G. VESTER DATE : 6-08
CHECKED BY : M. A. AVERETTE DATE : 6-08

4/28/2011 2:36:54 PM g:\projects\bmu\pitt 9\drawings\B4232_sd_bla_01.dgn

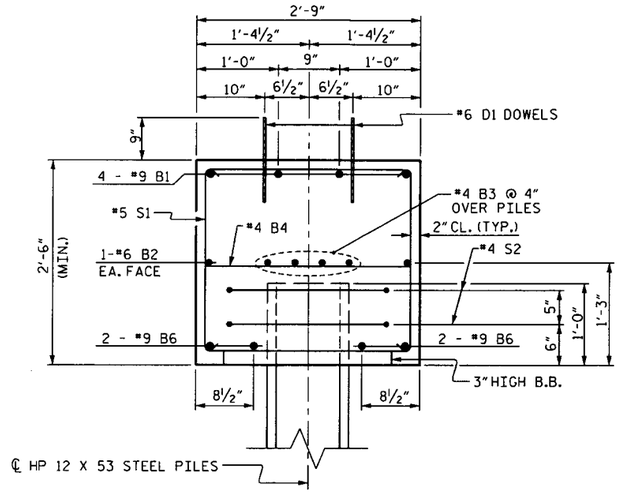

SECTION A-A

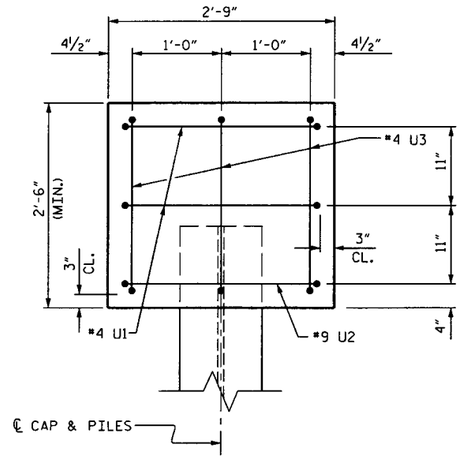

END VIEW

(TYPICAL BOTH ENDS)

BAR TYPES

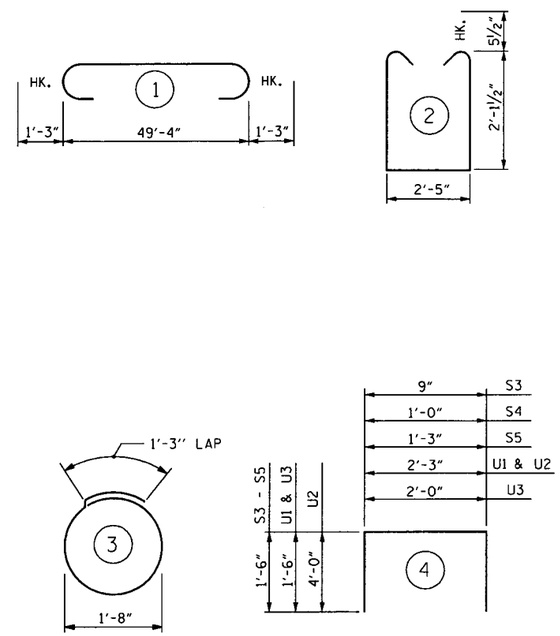

ALL BAR DIMENSIONS ARE OUT TO OUT

BILL OF MATERIAL

BENT #1

BAR	NO.	SIZE	TYPE	LENGTH	WEIGHT
B1	4	9	1	51'-10"	705
B2	2	6	STR	49'-4"	148
B3	8	4	STR	25'-11"	138
B4	13	4	STR	2'-5"	21
B5	4	4	STR	2'-4"	6
B6	4	9	STR	49'-4"	671
D1	60	6	STR	1'-6"	135
S1	62	5	2	7'-7"	490
S2	18	4	3	6'-6"	78
S3	2	4	4	3'-9"	5
S4	2	4	4	4'-0"	5
S5	2	4	4	4'-3"	6
U1	4	4	4	5'-3"	14
U2	2	9	4	10'-3"	70
U3	6	4	4	5'-0"	20

TOTAL REINFORCING STEEL	2512 Lbs.
CLASS "A" CONCRETE	12.8 Cu. Yds.
HP 12 X 53 STEEL PILES	
9 PILES REQUIRED - LIN. FEET	495

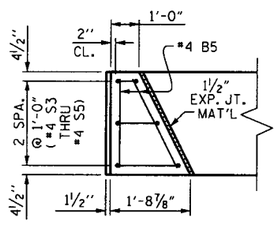

PLAN

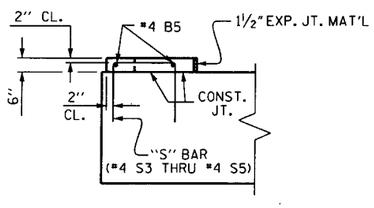

ELEVATION

LATERAL GUIDE DETAILS

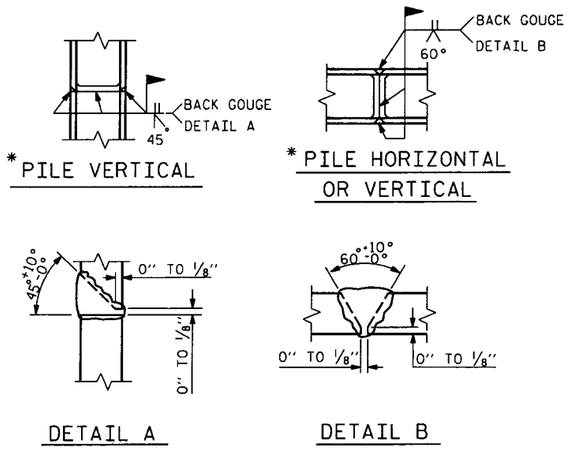

PILE SPLICE DETAILS

* POSITION OF PILE DURING WELDING.

WBS NO. 33575.3.1

PITT COUNTY

STATION: 16+14.55 -L-

REPLACES BRIDGE NO. 9 SHEET 2 OF 2

STATE OF NORTH CAROLINA
DEPARTMENT OF TRANSPORTATION
RALEIGH

SUBSTRUCTURE

BENT #1

42' CLEAR ROADWAY-105° SKEW

NORTH CAROLINA PROFESSIONAL SEAL 023908 ENGINEER MARK A. AVERETTE 4-28-11

PLANS PREPARED BY:

SIMPSON ENGINEERS & ASSOCIATES
5520 Dillard Drive
Suite 120
Cary, NC 27518
(919) 852-0468
(919) 852-0598 (Fax)
www.simpsonengr.com
LICENSURE NO. C-2521

REVISIONS						
NO.	BY:	DATE:	NO.	BY:	DATE:	
1			3			
2			4			

SHEET NO. 29

TOTAL SHEETS 32

DRAWN BY : D. G. VESTER DATE : 6-08

CHECKED BY : M. A. AVERETTE DATE : 6-08

4/28/2011 2:36:56 PM g:\projects\bmu\pitt 9\drawings\B4232_sd.bib.01.dgn

NOTES

STIRRUPS IN CAP MAY BE SHIFTED AS NECESSARY TO CLEAR #6 DI DOWELS.

THE CONTRACTOR HAS THE OPTION TO OMIT THE LATERAL GUIDES IF APPROVED BY THE ENGINEER.

THE CONTRACTOR SHALL PROVIDE FOR INSTALLATION OF THE 4"Ø DRAIN PIPE THROUGH THE WING WALLS AS REQUIRED FOR REINFORCED APPROACH FILLS. REINFORCING STEEL IN THE WING WALLS MAY BE SHIFTED AS NECESSARY TO CLEAR THE DRAIN PIPE.

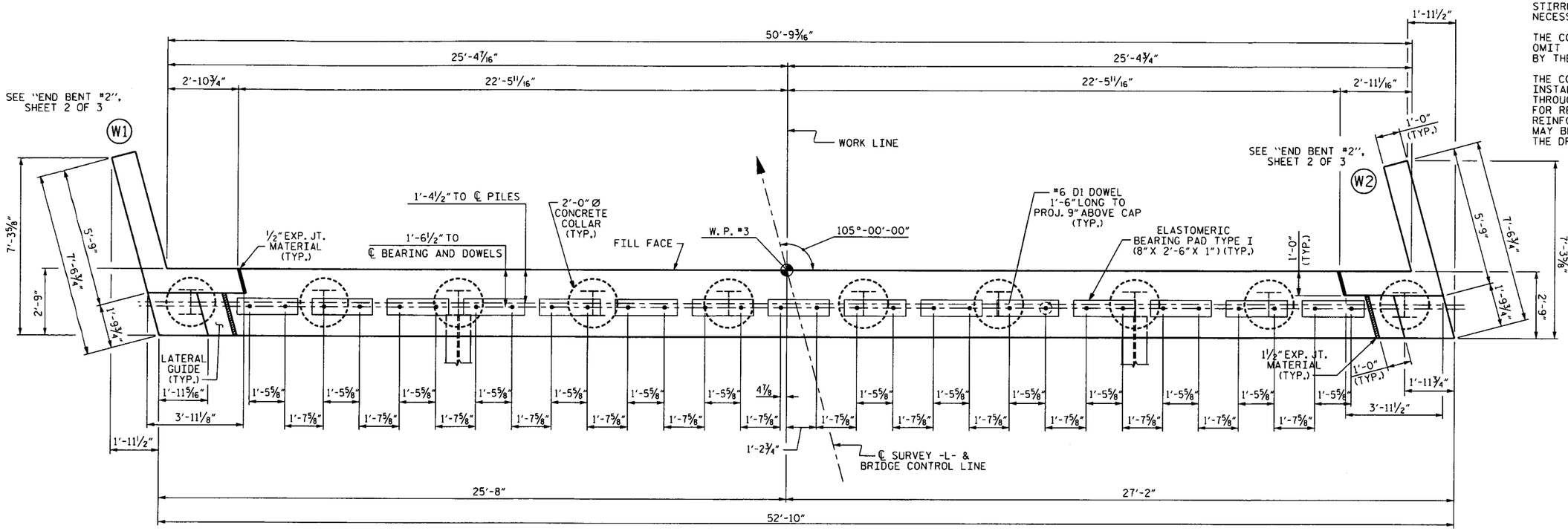

PLAN

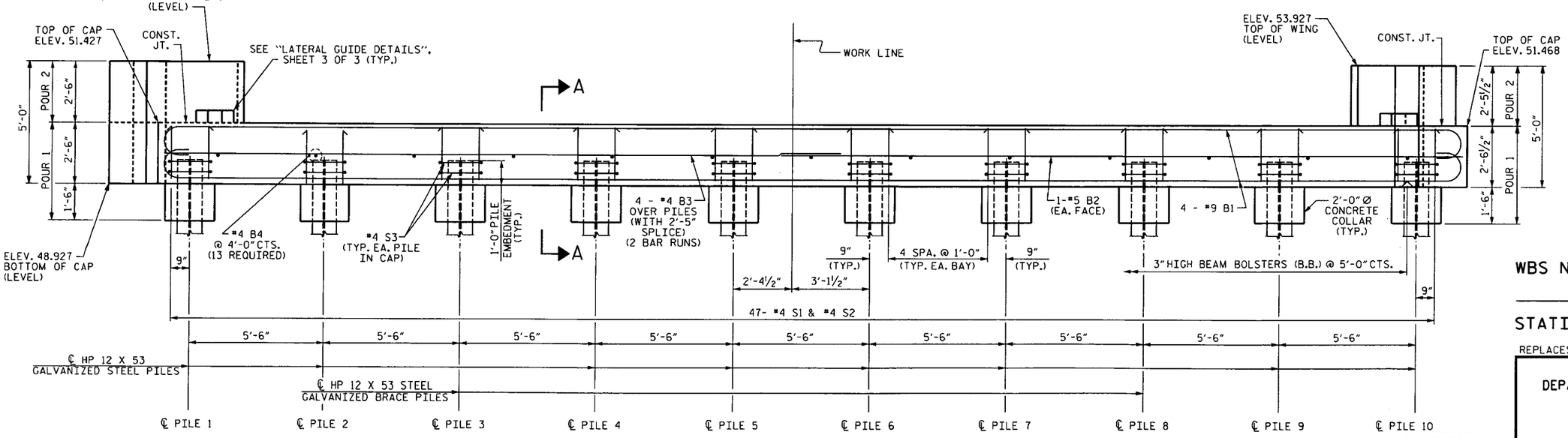

ELEVATION

WBS NO. 33575.3.1

PITT COUNTY

STATION: 16+14.55 -L-

REPLACES BRIDGE NO. 9 SHEET 1 OF 3

STATE OF NORTH CAROLINA
DEPARTMENT OF TRANSPORTATION
RALEIGH

SUBSTRUCTURE

END BENT #2

42' CLEAR ROADWAY-105° SKEW

REVISIONS						SHEET NO.
NO.	BY:	DATE:	NO.	BY:	DATE:	30
1			3			TOTAL SHEETS
2			4			32

PLANS PREPARED BY:

SIMPSON ENGINEERS & ASSOCIATES
5520 Dillard Drive
Suite 120
Cary, NC 27518
(919) 852-0468
(919) 852-0598 (Fax)
www.simpsonengr.com
LICENSURE NO. C-2521

NORTH CAROLINA PROFESSIONAL SEAL 023908 ENGINEER MARK A. AVERETTE 4-28-11

DRAWN BY : D. G. VESTER DATE : 6-08
CHECKED BY : M. A. AVERETTE DATE : 6-08

4/28/2011 2:36:59 PM g:\projects\bmu\pitt 9\drawings\84232_sd_eb2a_01.dgn

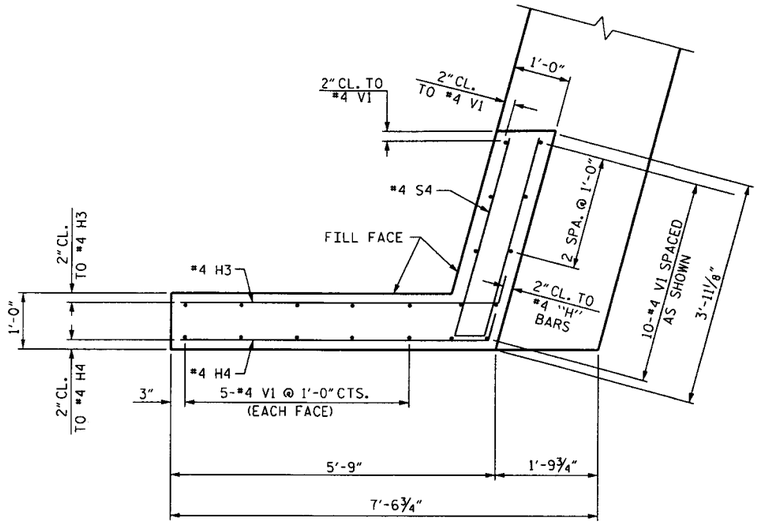

W1 PLAN OF LEFT WING

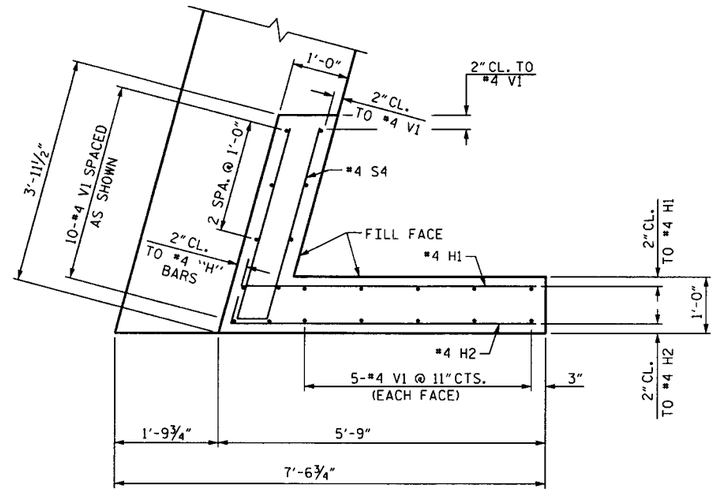

W2 PLAN OF RIGHT WING

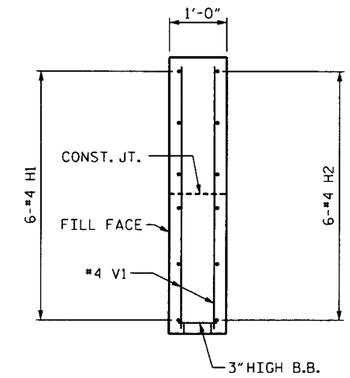

SECTION X-X

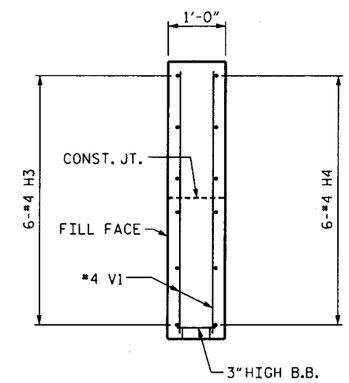

SECTION Y-Y

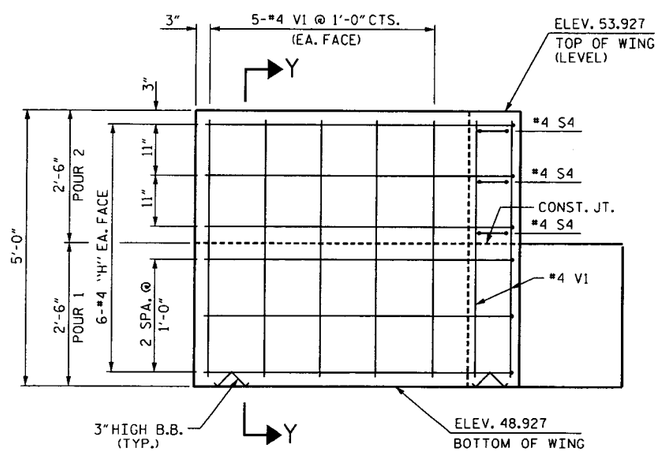

W1 ELEVATION OF LEFT WING

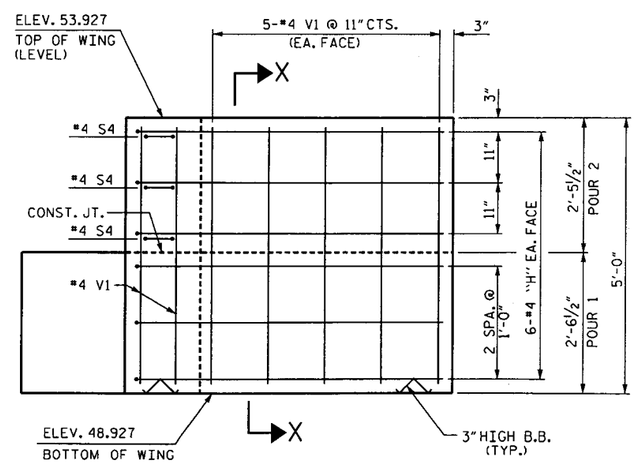

W2 ELEVATION OF RIGHT WING

WBS NO. 33575.3.1

PITT COUNTY

STATION: 16+14.55 -L-

REPLACES BRIDGE NO. 9 SHEET 2 OF 3

STATE OF NORTH CAROLINA
DEPARTMENT OF TRANSPORTATION
RALEIGH

SUBSTRUCTURE

END BENT #2

42' CLEAR ROADWAY-105° SKEW

NORTH CAROLINA PROFESSIONAL SEAL 023908 ENGINEER MARK A. AVERETTE 4-28-11

PLANS PREPARED BY:

SIMPSON ENGINEERS & ASSOCIATES
5520 Dillard Drive
Suite 120
Cary, NC 27518
(919) 852-0468
(919) 852-0598 (Fax)
www.simpsonengr.com
LICENSURE NO. C-2521

REVISIONS						SHEET NO.
NO.	BY:	DATE:	NO.	BY:	DATE:	31
1			3			TOTAL SHEETS
2			4			32

DRAWN BY : D. G. VESTER DATE : 6-08
CHECKED BY : M. A. AVERETTE DATE : 6-08

4/28/2011 2:37:00 PM g:\projects\bmu\pitt 9\drawings\B4232_sd_eb2b_01.dgn

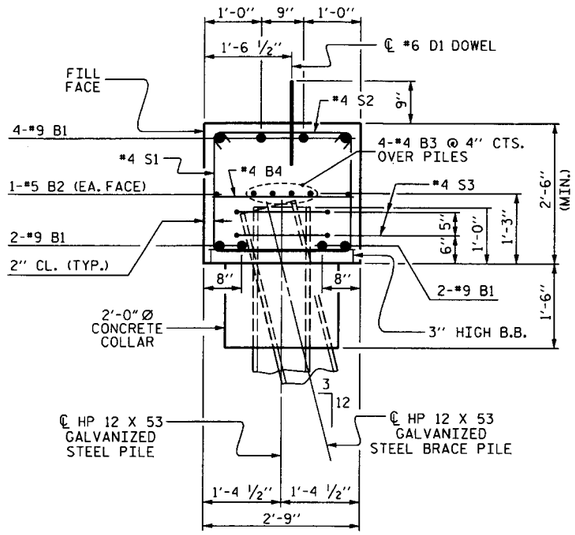

SECTION A-A

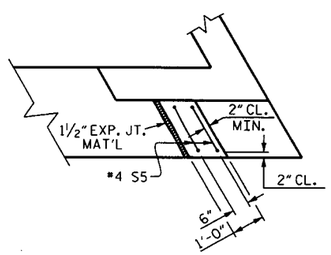

PLAN

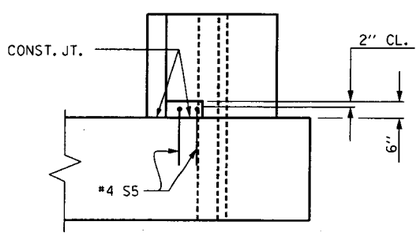

ELEVATION

LATERAL GUIDE DETAILS

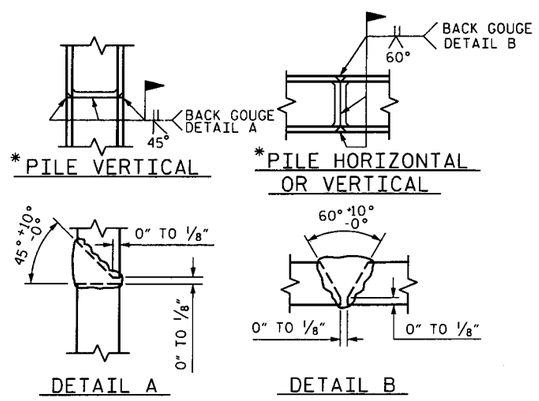

PILE SPLICE DETAILS

*POSITION OF PILE DURING WELDING.

BAR TYPES

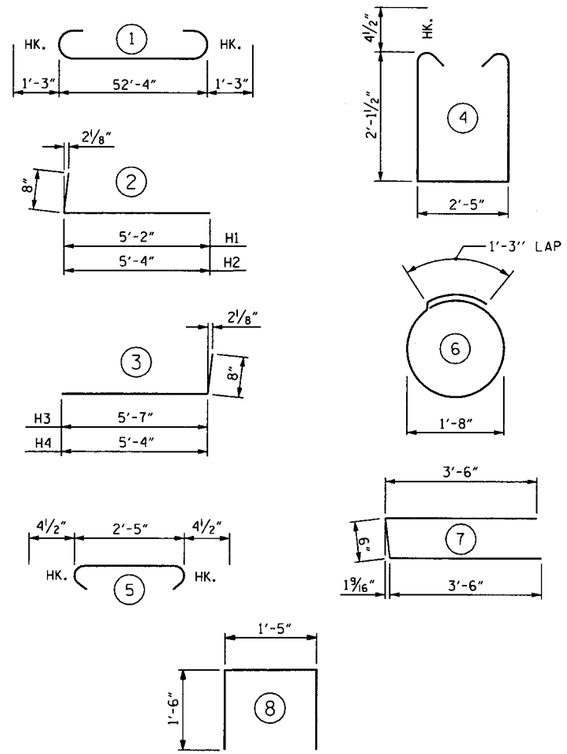

ALL BAR DIMENSIONS ARE OUT TO OUT

BILL OF MATERIAL

END BENT #2

BAR	NO.	SIZE	TYPE	LENGTH	WEIGHT
B1	8	9	1	54'-10"	1491
B2	2	5	STR	52'-6"	110
B3	8	4	STR	27'-6"	147
B4	13	4	STR	2'-5"	21
D1	30	6	STR	1'-6"	68
H1	6	4	2	5'-10"	23
H2	6	4	2	6'-0"	24
H3	6	4	3	6'-3"	25
H4	6	4	3	6'-1"	24
S1	47	4	4	7'-5"	233
S2	47	4	5	3'-2"	99
S3	20	4	6	6'-6"	87
S4	6	4	7	7'-6"	30
S5	4	4	8	4'-5"	12
V1	40	4	STR	4'-8"	125

TOTAL REINFORCING STEEL 2519 Lbs.

CLASS "A" CONCRETE BREAKDOWN

POUR #1	16.2 Cu. Yds.
POUR #2	1.6 Cu. Yds.
TOTAL	17.6 Cu. Yds.

HP 12 X 53 GALVANIZED STEEL PILES

10 PILES REQUIRED - LIN. FEET 550

WBS NO. 33575.3.1

PITT COUNTY

STATION: 16+14.55 -L-

REPLACES BRIDGE NO. 9 SHEET 3 OF 3

STATE OF NORTH CAROLINA
DEPARTMENT OF TRANSPORTATION
RALEIGH

SUBSTRUCTURE

END BENT #2

42' CLEAR ROADWAY-105° SKEW

NORTH CAROLINA PROFESSIONAL SEAL 023908 ENGINEER MARK A. AVERETTE 4-28-11

PLANS PREPARED BY:

SIMPSON ENGINEERS & ASSOCIATES
5520 Dillard Drive
Suite 120
Cary, NC 27518
(919) 852-0468
(919) 852-0598 (Fax)
www.simpsonengr.com
LICENSURE NO. C-2521

REVISIONS						SHEET NO.
NO.	BY:	DATE:	NO.	BY:	DATE:	32
1			3			TOTAL SHEETS
2			4			32

DRAWN BY : D. G. VESTER DATE : 6-08
CHECKED BY : M. A. AVERETTE DATE : 6-08

4/28/2011 2:37:03 PM gi\projects\bmu\pitt 9\drawings\B4232_sd_eb2c_01.dgn

NOTE: FOR PROFILE OF -SR1- AND -SR2- SEE SHEET 10

EROSION CONTROL PLAN

PROJECT REFERENCE	SHEET NO.
B-4232	EC-1
ROADWAY DESIGN ENGINEER	HYDRAULICS ENGINEER

VERTICAL SCALE 5' 0 5' 10'

HORIZONTAL SCALE 25' 0 25' 50'

*DESIGN EXCEPTION: BRIDGE WIDTH

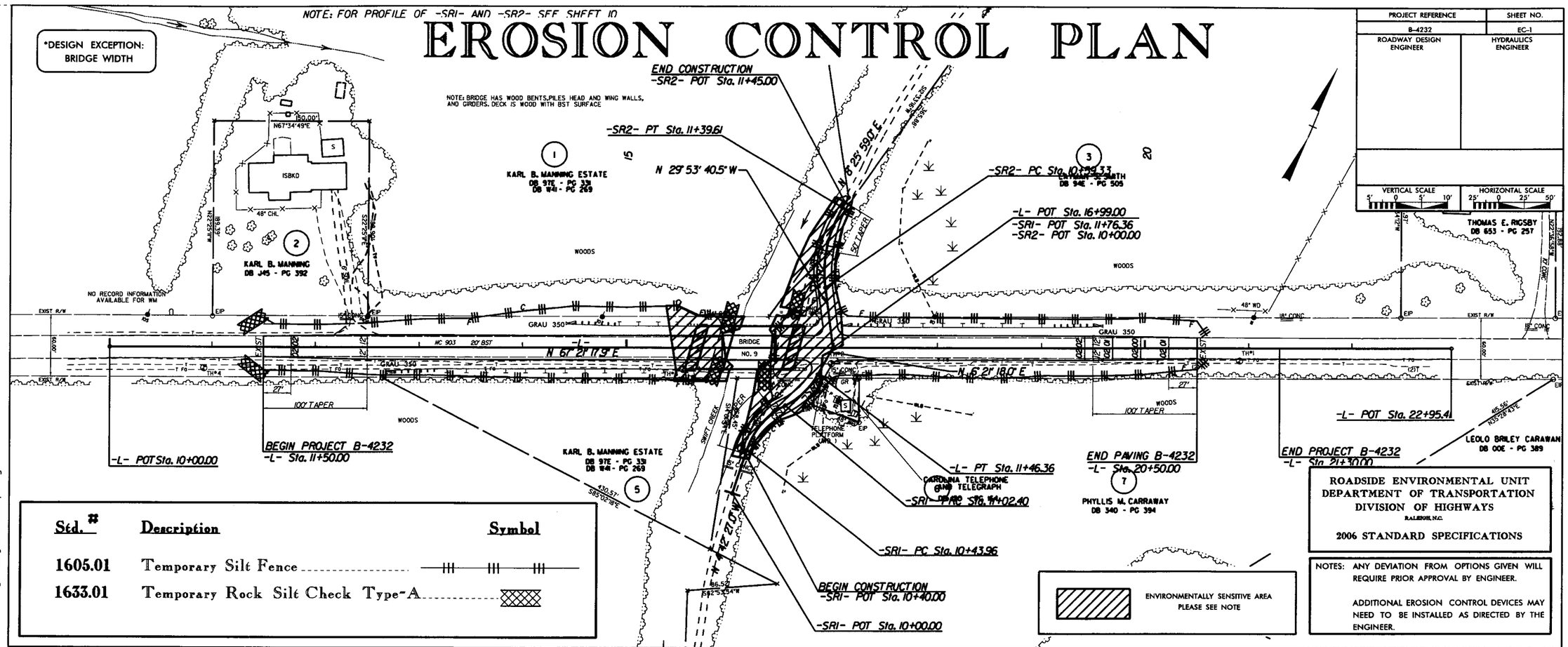

Std. #	Description	Symbol
1605.01	Temporary Silt Fence	
1633.01	Temporary Rock Silt Check Type-A	

ROADSIDE ENVIRONMENTAL UNIT
DEPARTMENT OF TRANSPORTATION
DIVISION OF HIGHWAYS
RALEIGH, N.C.

2006 STANDARD SPECIFICATIONS

NOTES: ANY DEVIATION FROM OPTIONS GIVEN WILL REQUIRE PRIOR APPROVAL BY ENGINEER.

ADDITIONAL EROSION CONTROL DEVICES MAY NEED TO BE INSTALLED AS DIRECTED BY THE ENGINEER.

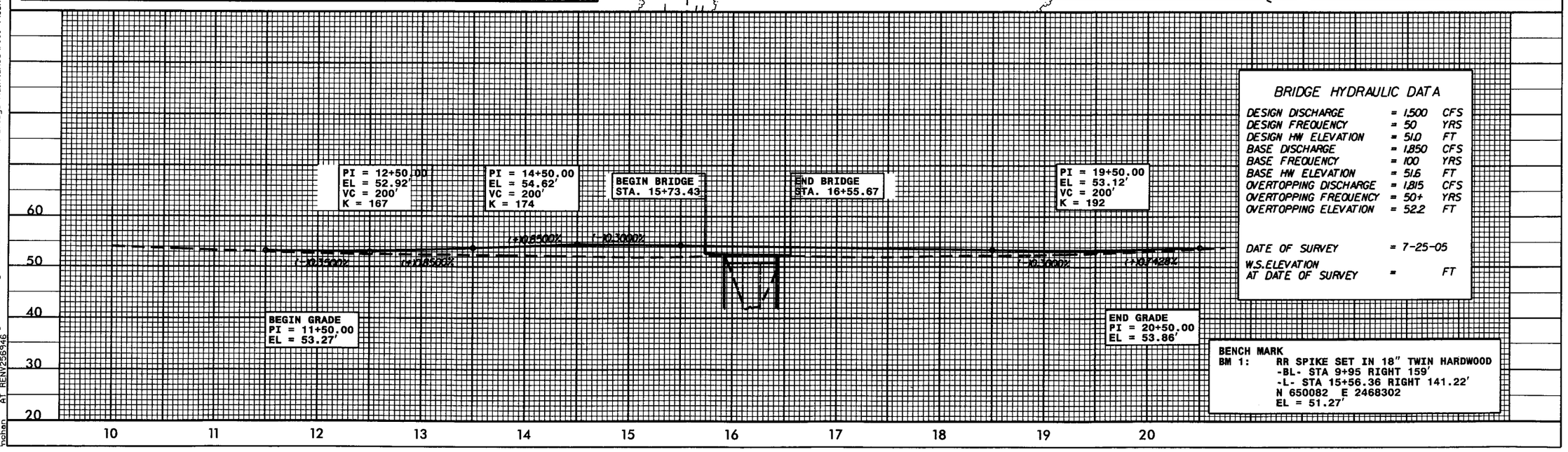

BRIDGE HYDRAULIC DATA

DESIGN DISCHARGE	= 1,500	CFS
DESIGN FREQUENCY	= 50	YRS
DESIGN HW ELEVATION	= 51.0	FT
BASE DISCHARGE	= 1,850	CFS
BASE FREQUENCY	= 100	YRS
BASE HW ELEVATION	= 51.6	FT
OVERTOPPING DISCHARGE	= 1,815	CFS
OVERTOPPING FREQUENCY	= 50+	YRS
OVERTOPPING ELEVATION	= 52.2	FT
DATE OF SURVEY	= 7-25-05	
W.S. ELEVATION AT DATE OF SURVEY	=	FT

BENCH MARK
BM 1: RR SPIKE SET IN 18" TWIN HARDWOOD
-BL- STA 9+95 RIGHT 159'
-L- STA 15+56.36 RIGHT 141.22'
N 650082 E 2468302
EL = 51.27'

$$DATE$$
$$TIME$$ 22-MAR-2011 10:39
C:\Documents and Settings\rchan\My Documents\From D drive\Reu\Bridge Maintenance\Pitt$\sent to Rodney Sealey\b4232_EC_psh.dgn
rchan AT REN\256946

PROJECT REFERENCE NO.	SHEET NO.
B-4232	EC-2
R/W SHEET NO.	
ROADWAY DESIGN ENGINEER	HYDRAULICS ENGINEER

MATTING INSTALLATION DETAIL

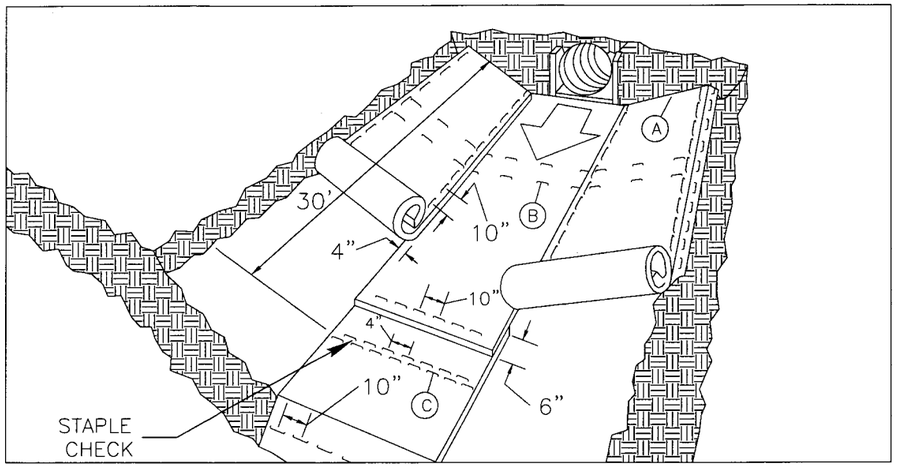

MATTING IN DITCHES

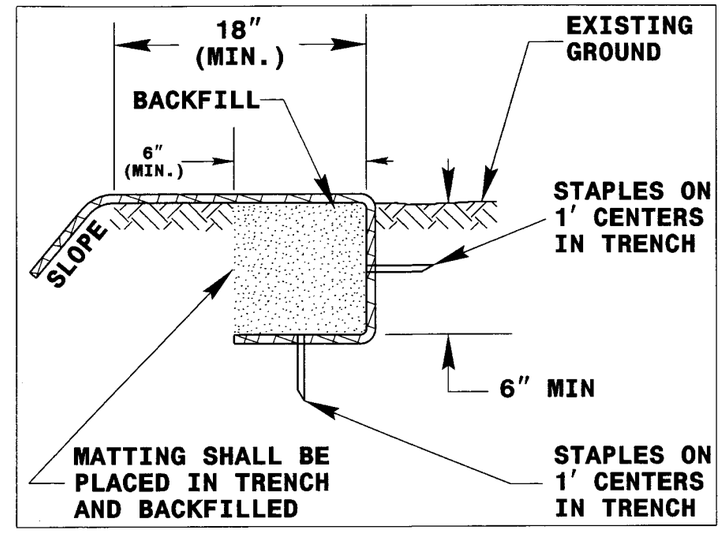

DIAGRAM (A)

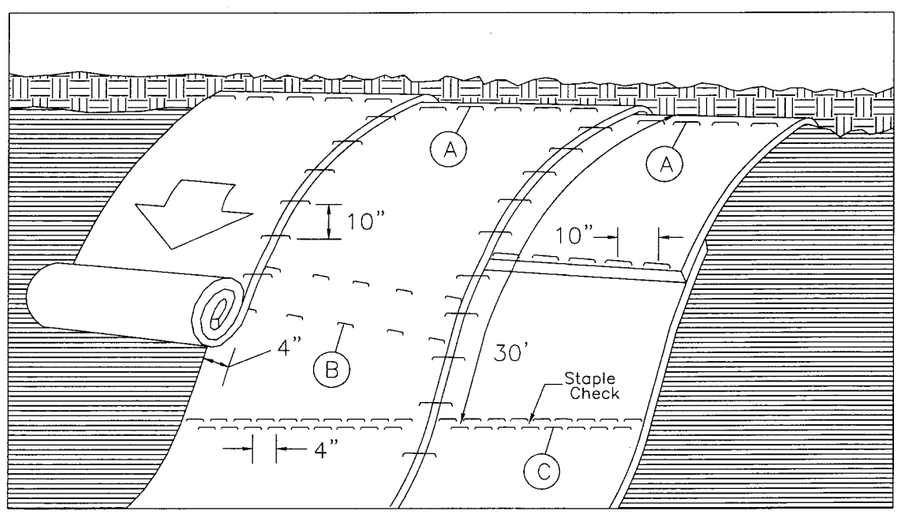

MATTING ON SLOPES

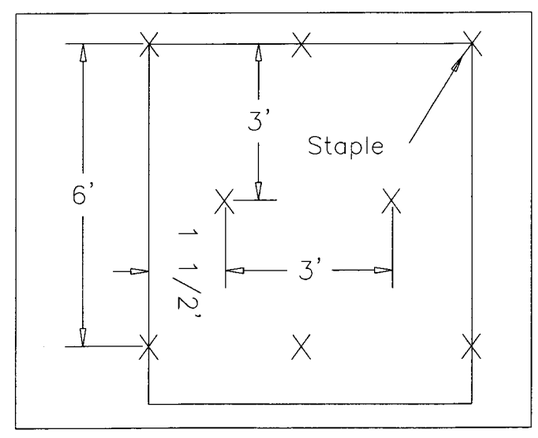

DIAGRAM (B)

Staple Check Pattern

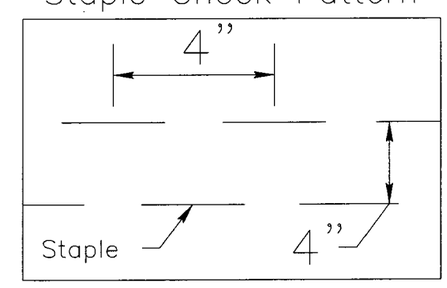

DIAGRAM (C)

NOTES:

THIS DETAIL APPLIES TO STRAW, EXCELSIOR, AND PERMANENT SOIL REINFORCEMENT MAT (PSRM) INSTALLATION.

STAPLES SHALL BE NO. 11 GAUGE STEEL WIRE FORMED INTO A "U" SHAPE WITH A MINIMUM THROAT WIDTH OF 1 INCH AND NOT LESS THAN 6 INCHES IN LENGTH.

NOT TO SCALE

PROJECT REFERENCE NO.	SHEET NO.
B-4232	RF-1
R/W SHEET NO.	
ROADWAY DESIGN ENGINEER	HYDRAULICS ENGINEER

PLANTING DETAILS

SEEDLING / LINER BAREROOT PLANTING DETAIL

HEALING IN

1. Locate a healing-in site in a shady, well protected area.
2. Excavate a flat bottom trench 12 inches deep and provide drainage.

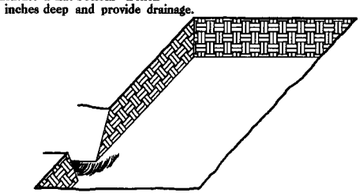

3. Backfill the trench with 2 inches well rotted sawdust. Place a 2 inch layer of well rotted sawdust at a sloping angle at one end of the trench.

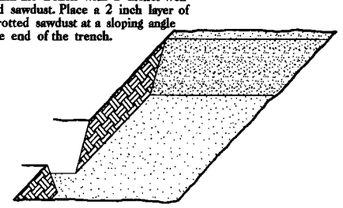

4. Place a single layer of plants against the sloping end so that the root collar is at ground level.

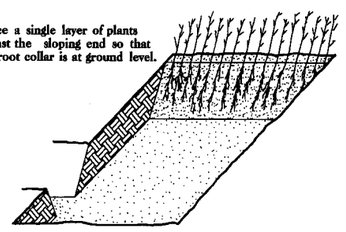

5. Place a 2 inch layer of well rotted sawdust over the roots maintaining a sloping angle.

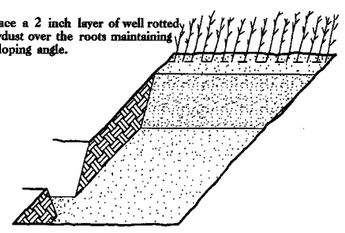

6. Repeat layers of plants and sawdust as necessary and water thoroughly.

DIBBLE PLANTING METHOD
USING THE KBC PLANTING BAR

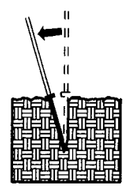

1. Insert planting bar as shown and pull handle toward planter.

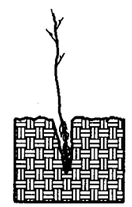

2. Remove planting bar and place seedling at correct depth.

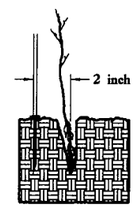

3. Insert planting bar 2 inches toward planter from seedling.

4. Pull handle of bar toward planter, firming soil at bottom.

5. Push handle forward firming soil at top.

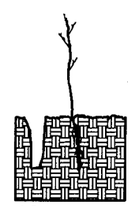

6. Leave compaction hole open. Water thoroughly.

PLANTING NOTES:

PLANTING BAG
During planting, seedlings shall be kept in a moist canvas bag or similar container to prevent the root systems from drying.

KBC PLANTING BAR
Planting bar shall have a blade with a triangular cross section, and shall be 12 inches long, 4 inches wide and 1 inch thick at center.

ROOT PRUNING
All seedlings shall be root pruned, if necessary, so that no roots extend more than 10 inches below the root collar.

REFORESTATION

☐ TREE REFORESTATION SHALL BE PLANTED 6 FT. TO 10 FT. ON CENTER, RANDOM SPACING, AVERAGING 8 FT. ON CENTER, APPROXIMATELY 680 PLANTS PER ACRE.

REFORESTATION

MIXTURE, TYPE, SIZE, AND FURNISH SHALL CONFORM TO THE FOLLOWING:

30%	PLATANUS OCCIDENTALIS	AMERICAN SYCAMORE	12 in - 18 in BR
30%	LIRIODENDRON TULIPIFERA	YELLOW POPLAR	12 in - 18 in BR
40%	FRAXINUS PENNSYLVANICA	GREEN ASH	12 in - 18 in BR

REFORESTATION DETAIL SHEET

N.C.D.O.T. - ROADSIDE ENVIRONMENTAL UNIT

T.I.P. NO.	SHEET NO.
B-4232	UC-1

TIP PROJECT: B-4232

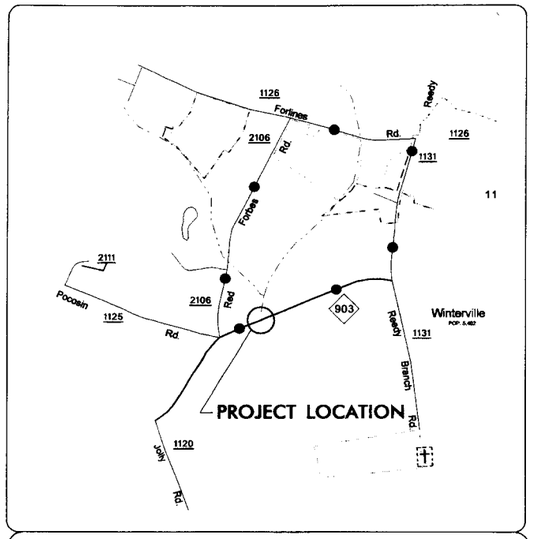

OFFSITE DETOUR

STATE OF NORTH CAROLINA
DIVISION OF HIGHWAYS

UTILITY CONSTRUCTION PLANS
PITT COUNTY

LOCATION: BRIDGE NO. 9 OVER SWIFT CREEK ON NC 903

TYPE OF WORK: WATERLINE RELOCATION

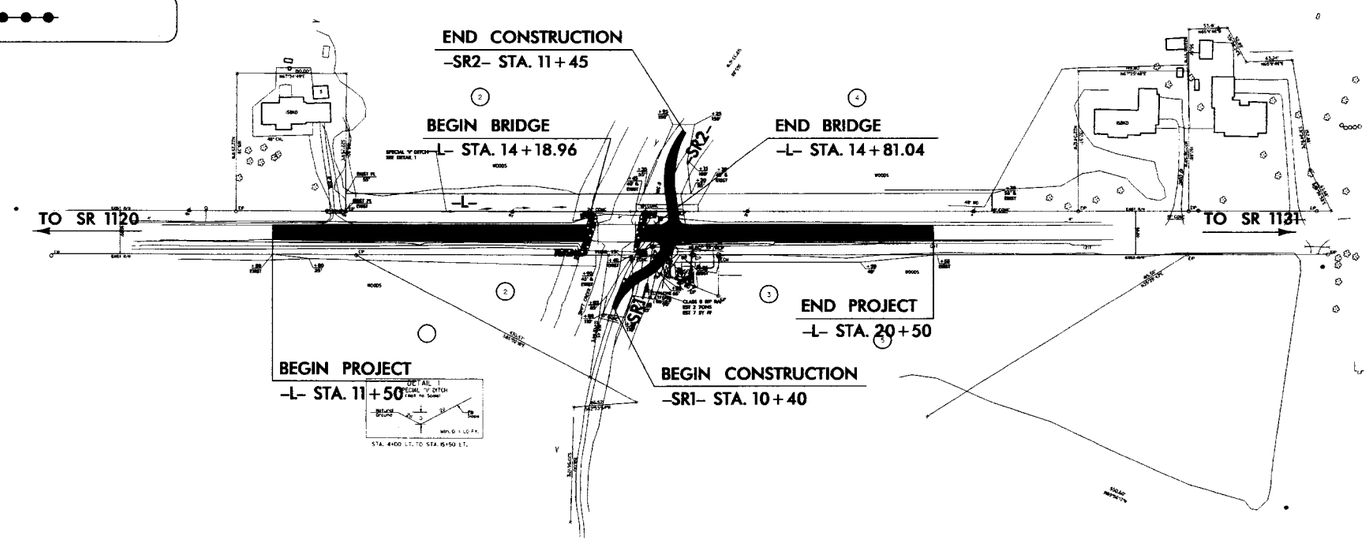

GRAPHIC SCALES

50 25 0 50 100
PLANS

50 25 0 50 100
PROFILE (HORIZONTAL)

10 5 0 10 20
PROFILE (VERTICAL)

INDEX OF SHEETS

SHEET NO.	DESCRIPTION
UC-1	TITLE SHEET
UC-2	UTILITY CONSTRUCTION PLAN SHEET
UC-3	PROFILE SHEET
UC-4	DETAILS SHEET

WATER AND SEWER OWNERS ON PROJECT

(1) BELL ARTHUR WATER CORPORATION

SEAL

NORTH CAROLINA PROFESSIONAL SEAL 23041 02/28/11 ENGINEER COREY D. BOUSQUET

PREPARED IN THE OFFICE OF:
DIVISION OF HIGHWAYS
UTILITIES ENGINEERING SECTION
1591 MAIL SERVICES CENTER
RALEIGH NC 27699-1591
PHONE (919) 250-4128
FAX (919) 250-4139

Roger Worthington, P.E.	UTILITIES SECTION ENGINEER
Corey Bousquet, P.E.	UTILITIES SQUAD LEADER PROJECT ENGINEER
Stephanie Athey	UTILITIES PROJECT DESIGNER

03/08/99
28-FEB-2011 08:38
R:\Utilities\Ray_Ut\Proj\b4232 ray_tsh_uc.dgn
$$$$USERNAME$$$$

PROJECT REFERENCE NO.	SHEET NO.
B-4232	UC-2

DESIGNED BY: SBA
DRAWN BY: SBA
CHECKED BY: CDB
APPROVED BY: CDB
REVISED:

NORTH CAROLINA DEPARTMENT OF TRANSPORTATION
UTILITIES ENGINEERING SEC.
PHONE:(919)250-4128
FAX:(919)250-4119

NORTH CAROLINA PROFESSIONAL SEAL 23041 ENGINEER CORNEY D. MOSQUITE 8-17-99

UTILITY CONSTRUCTION PLANS ONLY

UTILITY CONSTRUCTION

8/17/99

REVISIONS

NOTE: BRIDGE HAS WOOD BENTS, PILES HEAD AND WING WALLS, AND GIRDERS. DECK IS WOOD WITH BST SURFACE

OPEN CUT — STA. 2+25 — TRENCHLESS INSTALLATION — STA. 7+00 — OPEN CUT

USE DI RJ WATER PIPE

PROP. 238' OF TRENCHLESS INSTALLATION IN SOIL AND PROP. 237' OF TRENCHLESS INSTALLATION NOT IN SOIL

USE DI RJ WATER PIPE

ABANDON 834 LF OF 4" WATER LINE

-SR2- PI Sta 11+01.04, Δ = 38° 19' 39.5" (RT), D = 47° 44'

POT Sta. 11+51.08

-BL- 4 PINC 10+91.57
-L- STA. 16+52.55 OFF 17.60'

-BL- 5 POT 5+00.00
-L- STA. 10+60.99 OFF 15.16'

SPECIAL 'V' DITCH SEE DETAIL 1

KARL B. MANNING DB J45 - PG 392

ISBKD

PC Sta. 10+59.33
-L- POT Sta. 16+99.00
-SR1- POT Sta. 11+76.36
-SR2- POT Sta. 10+00.00

PROP. 845' OF 6" WATER LINE
-BL- 5 POT 16+67.01
-L- STA. 22+27.99 OFF 15.32'

THOMAS E. RIGSBY DB 653 - PG 257

ABANDON — GRAU 350 — N 67° 21' 17.9" E — TYPE B-77 — BRIDGE NO. 9 — N 6° 21' 18.0" E — ABANDON

PROP. 6" VALVE STA. 0+10

PLUG

BEGIN PROJECT B-4232
-L- Sta. 11+50.00

-L- POT Sta. 10+00.00

KARL B. MANNING ESTATE DB 97E - PG 331 DB W41 - PG 269

CAROLINA TELEPHONE AND TELEGRAPH DB T20 - PG 164 DB 204L - PG 72

CLASS B RIP RAP EST 2 TONS EST 7 SY FF

PRC Sta. 11+02.40
PC Sta. 10+43.96
POT Sta. 10+40.00
BEGIN CONSTR.
POT Sta. 10+00.00
PT Sta. 11+46.36

AVING B-4232
-L- Sta. 20+50.00

PLUG

END 1

PROP. 6" VALVE STA. 8+35

LEOLO BRILEY CARAWAN DB 00E - PG 389

MARY VIRGINIA LANGSTON DB 1218 - PG 305

PHYLLIS M. CARRAWAY DB 340 - PG 394

BM #1 -BL- 9+94.75 158.76 RT ELEV. 51.27'

DETAIL SHOWING PAVEMENT - BRIDGE RELATIONSHIP

BEGIN APPROACH SLAB STA. 15+63.59 — ** TYPE B-77
END APPROACH SLAB STA. 16+65.51 — ** IA-350
42' CLEAR ROADWAY
BEGIN BRIDGE STA. 15+74.55
END BRIDGE STA. 16+54.55
1" G/R ANCHOR UNIT REQUIRED

DETAIL 1
SPECIAL 'V' DITCH (NOT TO SCALE)
MIN. D = 1'-0" FT.
STA. 18+00 LT. TO STA. 15+50 LT.

DATUM DESCRIPTION

THIS IS AN ENGLISH PROJECT BASED ON HARN-NAD83/95 DATUM.
NCDOT GPS MONUMENT "B4232-1" WAS HELD AS A GRID COORDINATE AND THE NETWORK WAS LOCALIZED FROM THERE.
STATE PLANE GRID COORDINATES OF
NORTHING: 649854.6025(ft) EASTING: 2467340.1637(ft)
THE AVERAGE COMBINED GRID FACTOR USED ON THIS PROJECT (GROUND TO GRID) IS: 0.99988680
THE NC LAMBERT GRID BEARING AND HORIZONTAL GROUND DISTANCE FROM B4232-1 TO B-5 STATION NORTH IS
N 69° 39' 02.1" E 813.92'
ALL LINEAR DIMENSIONS ARE LOCALIZED HORIZONTAL DISTANCES
VERTICAL DATUM USED IS NAVD 88

-SR1- PI Sta. 10+74.76, Δ = 44° 58' 45.9" (RT), D = 76° 23' 39.7", L = 58.44', T = 30.79', R = 75.00'

-SR2- PI Sta. 11+25.03, Δ = 33° 35' 00.9" (LT), D = 76° 23' 39.7", L = 43.96', T = 22.63', R = 75.00'

NOTE FOR PROFILE OF SR1 AND SR2 SEE SHEET 4

BRIDGE HYDRAULIC DATA

DESIGN DISCHARGE	= 1500	CFS
DESIGN FREQUENCY	= 50	YRS
DESIGN HW ELEVATION	= 510	FT
BASE DISCHARGE	= 1850	CFS
BASE FREQUENCY	= 100	YRS
BASE HW ELEVATION	= 516	FT
OVERTOPPING DISCHARGE	= 1815	CFS
OVERTOPPING FREQUENCY	= 50+	YRS
OVERTOPPING ELEVATION	= 522	FT
DATE OF SURVEY	= 7-26-05	
W.S. ELEVATION AT DATE OF SURVEY	=	FT

PI = 12+50.00
EL = 52.92'
VC = 200'
K = 167

PI = 14+50.00
EL = 54.62'
VC = 200'
K = 174

BEGIN BRIDGE STA. 15+74.55

END BRIDGE STA. 16+54.55

PI = 19+50.00
EL = 53.12'
VC = 200'
K = 192

(+)0.8505% (-)0.3000% (-)0.3464% (+)0.8505% (-)0.3000% (+)0.7417%

BEGIN GRADE
PI = 11+50.00
EL = 53.27'

END GRADE
PI = 20+50.00
EL = 53.86'

60 50 40 30 20

10 11 12 13 14 15 16 17 18 19 20

BENCH MARK
BM 1: RR SPIKE SET IN 18" TWIN HARDWOOD
-BL- STA 9+95 RIGHT 159'
-L- STA 15+56.36 RIGHT 141.22'
N 650082 E 2468302
EL = 51.27'

PROJECT REFERENCE NO.	SHEET NO.
B-4232	UC-3

DESIGNED BY: SBA
DRAWN BY: SBA
CHECKED BY: CDB
APPROVED BY: CDB
REVISED:

NORTH CAROLINA DEPARTMENT OF TRANSPORTATION

UTILITIES ENGINEERING SEC.
PHONE:(919)250-4128
FAX:(919)250-4119

NORTH CAROLINA PROFESSIONAL SEAL ENGINEER 23041 03/30/99 CHRIS D. BOUDOUET

UTILITY CONSTRUCTION PLANS ONLY

UTILITY CONSTRUCTION

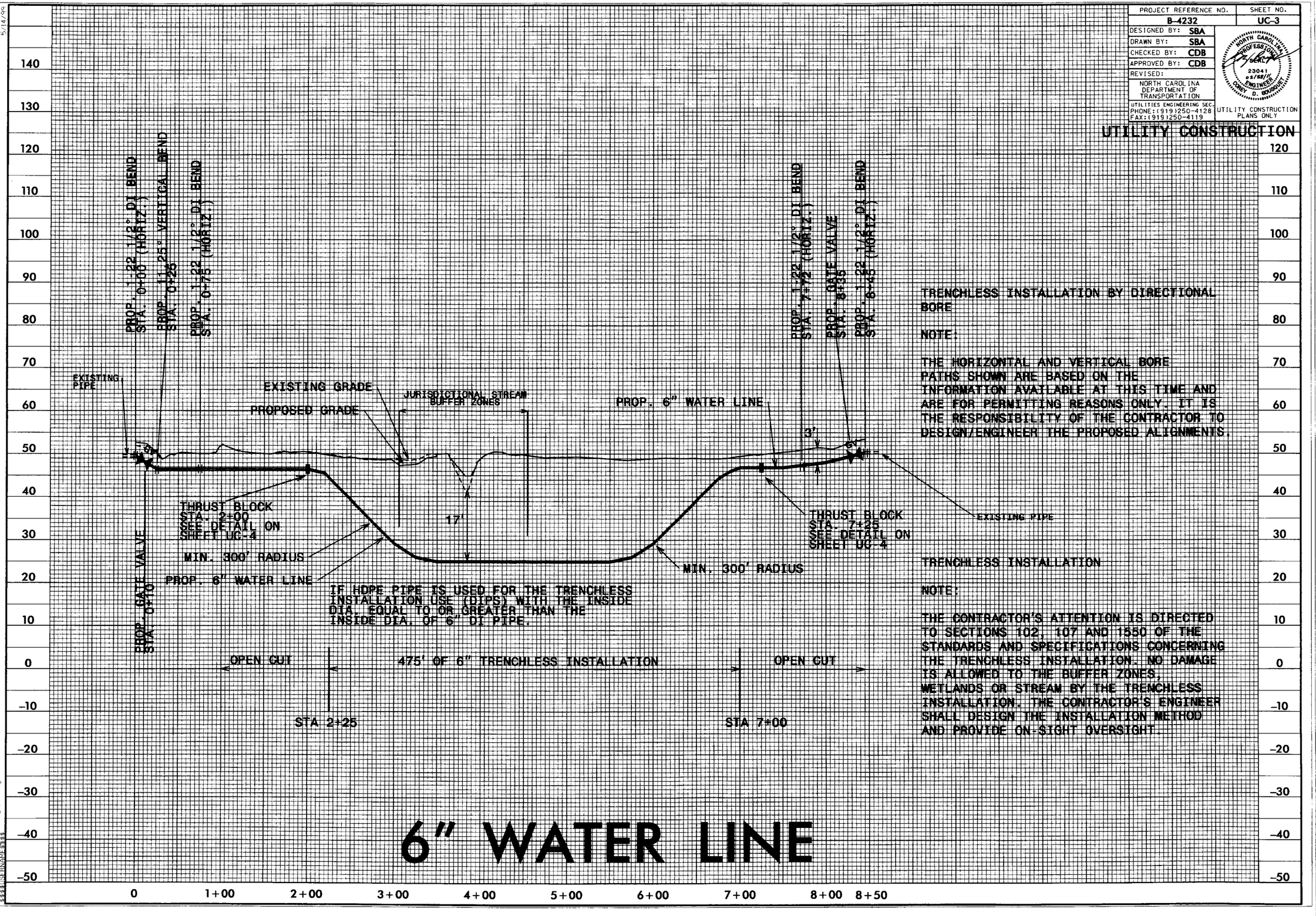

TRENCHLESS INSTALLATION BY DIRECTIONAL BORE

NOTE:

THE HORIZONTAL AND VERTICAL BORE PATHS SHOWN ARE BASED ON THE INFORMATION AVAILABLE AT THIS TIME AND ARE FOR PERMITTING REASONS ONLY. IT IS THE RESPONSIBILITY OF THE CONTRACTOR TO DESIGN/ENGINEER THE PROPOSED ALIGNMENTS.

TRENCHLESS INSTALLATION

NOTE:

THE CONTRACTOR'S ATTENTION IS DIRECTED TO SECTIONS 102, 107 AND 1550 OF THE STANDARDS AND SPECIFICATIONS CONCERNING THE TRENCHLESS INSTALLATION. NO DAMAGE IS ALLOWED TO THE BUFFER ZONES, WETLANDS OR STREAM BY THE TRENCHLESS INSTALLATION. THE CONTRACTOR'S ENGINEER SHALL DESIGN THE INSTALLATION METHOD AND PROVIDE ON-SIGHT OVERSIGHT.

5/14/99

28-FEB 2011 08:41
A:\Utilities\Mapping\P-0_Jobs\
B4232_UC_01.dgn

PROJECT REFERENCE NO.	SHEET NO.
B-4232	UC-4
DESIGNED BY: SBA	
DRAWN BY: SBA	
CHECKED BY: CDB	
APPROVED BY: CDB	
REVISED:	
NORTH CAROLINA DEPARTMENT OF TRANSPORTATION	
UTILITIES ENGINEERING SEC. PHONE:(919)250-4128 FAX:(919)250-4119	UTILITY CONSTRUCTION PLANS ONLY

NORTH CAROLINA PROFESSIONAL SEAL 23041 ENGINEER CORNEY D. BOUSQUET 02/28/11

UTILITY CONSTRUCTION

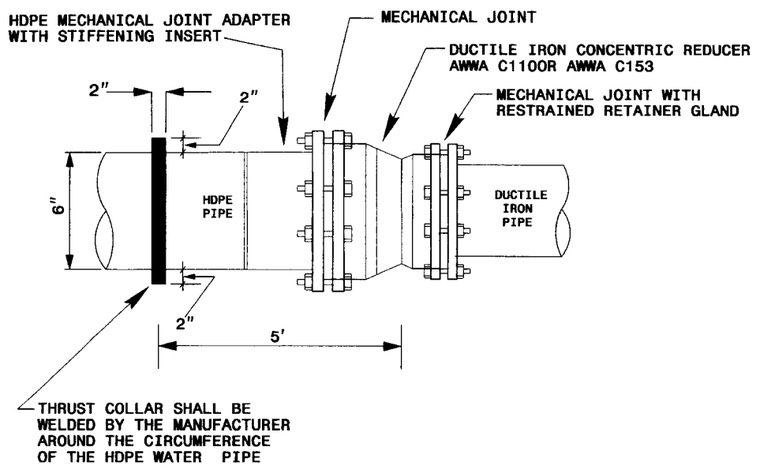

NOTE: SEE SEPARATE DETAIL FOR CONCRETE THRUST COLLAR

TRANSITION DETAIL FROM HDPE TO DI WATER PIPE

MAXIMUM TRENCH WIDTH AT TOP OF PIPE

NOMINAL PIPE SIZE (INCHES)	TRENCH WIDTH (INCHES)	NOMINAL PIPE SIZE (INCHES)	TRENCH WIDTH (INCHES)
4	28	20	44
6	30	24	48
8	32	30	54
10	34	36	60
12	36	42	66
14	38	48	72
16	40	54	78
18	42		

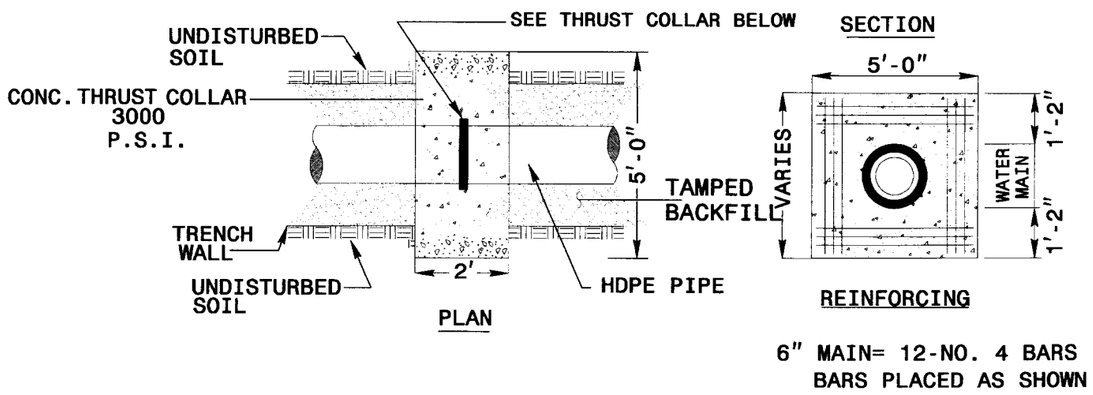

NOTE: BOTTOM OF TRENCH NEEDS TO BE STABILIZED TO SUPPORT THE WEIGHT OF THE THRUST COLLAR.

CONCRETE THRUST COLLAR DETAIL - 6" WATER LINES

TRENCH DETAIL

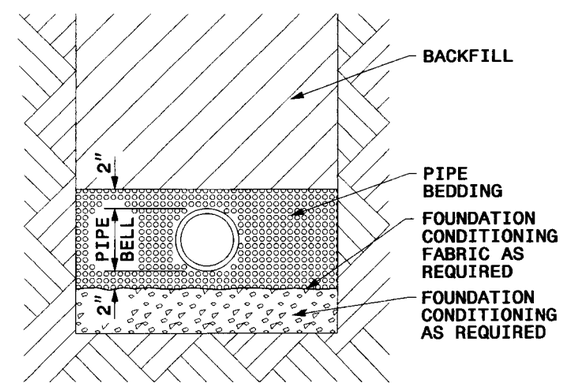

PLACE FOUNDATION CONDITIONING MATERIAL BELOW BEDDING IF REQUIRED, AS DIRECTED BY ENGINEER. PIPE BEDDED IN SELECT MATERIAL, CLASS II (TYPE 1) OR CLASS III. TRENCH BACKFILLED IN LOOSE 6" LAYERS COMPACTED TO TOP OF TRENCH USING LOCAL EXCAVATED MATERIAL IF APPROVED BY THE ENGINEER, OR SELECT MATERIAL. ALL MATERIAL SHALL BE FREE OF ROCKS, FOREIGN MATERIAL, AND FROZEN EARTH. COMPACTION SHALL BE TO APPROXIMATELY 95% DENSITY IN ACCORDANCE WITH AASHTO T-99 AS MODIFIED BY THE DEPARTMENT OF TRANSPORTATION.

5/14/99

R:\Utilities\Proj\B4232 Ut_details_uc4.dgn
28-FEB-2011 08:41
$$$$USERNAME$$$$