B-5234

CONTRACT: DO00057

STATE OF NORTH CAROLINA
DIVISION OF HIGHWAYS

CLAY COUNTY

STATE	STATE PROJECT REFERENCE NO.	SHEET NO.	TOTAL SHEETS
N.C.	B-5234	1	

STATE PROJ. NO.	F.A. PROJ. NO.	DESCRIPTION
42836.3.1		PE, R/W, CONST

LOCATION: ***BRIDGE NO. 100 ON SR 1100 (OLD US 64) OVER TROUT COVE CREEK***

TYPE OF WORK: ***GRADING, DRAINAGE, PAVING, & STRUCTURE***

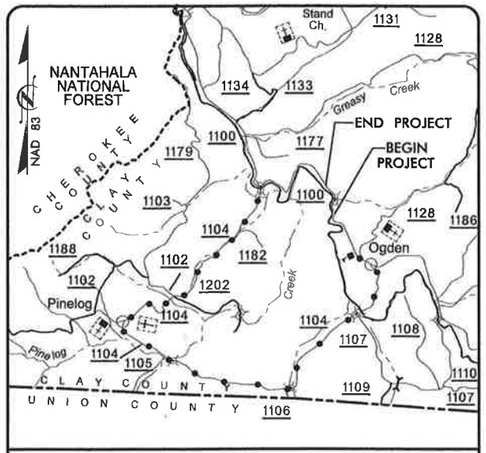

VICNITY MAP

OFFSITE DETOUR

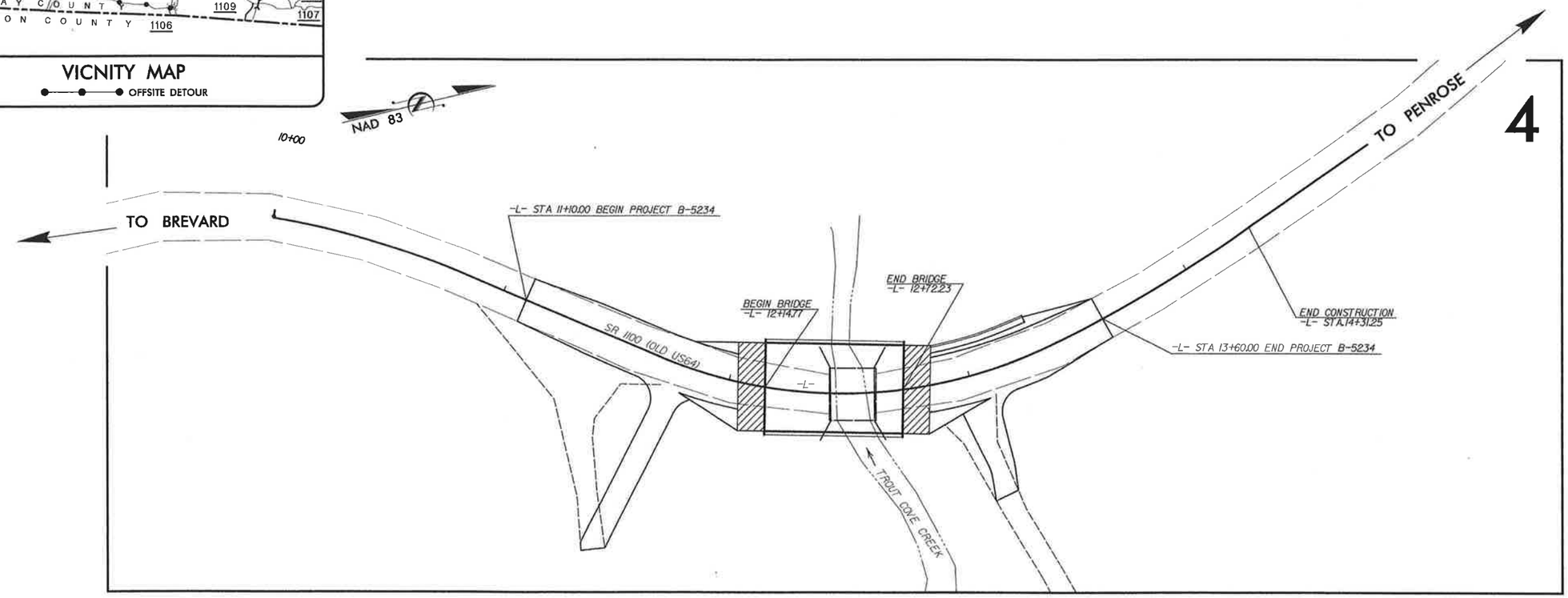

4

GRAPHIC SCALES

20 10 0 20 40
PLANS

20 10 0 20 40
PROFILE (HORIZONTAL)

4 2 0 4 8
PROFILE (VERTICAL)

DESIGN DATA

ADT 2010 = 2,200
ADT 2030 = 4,644
T = 7 %
V = 45 MPH

DESIGN EXCEPTION REQUIRED FOR HORIZONTAL CURVATURE AND HORIZONTAL STOPPING SIGHT DISTANCE

PROJECT LENGTH

LENGTH ROADWAY PROJECT B-5234	=	.036 MI
LENGTH STRUCTURE PROJECT B-5234	=	.011 MI
TOTAL LENGTH PROJECT B-5234	=	.047 MI

Plans Prepared By:
TGS ENGINEERS
TGS ENGINEERS
SUITE 141
975 WALNUT STREET
CARY, NC 27511
PH (919) 319-8850

2006 STANDARD SPECIFICATIONS

LETTING DATE:

Plans Prepared for:
NCDOT DIVISION 14
NCDOT Contact:
RALPH CANNADY
DIVISION PROJECT MANAGER

CHARLES L. FLOWE, PE
PROJECT ENGINEER

W. CRAIG PARKER, PE
PROJECT DESIGN ENGINEER

HYDRAULICS ENGINEER
NORTH CAROLINA PROFESSIONAL SEAL 12300 ENGINEER CHARLES LEE FLOWE
SIGNATURE: P.E. 5/11/2010

ROADWAY DESIGN ENGINEER
NORTH CAROLINA PROFESSIONAL SEAL 35018 ENGINEER JIMMY L. TERRY JR.
SIGNATURE: P.E. 5/11/10

09/28/99
5/11/2010
R:\Roadway\Proj\MA14004B_RDY_TSH.dgn
14004B BSK

PROJECT REFERENCE NO.	SHEET NO.
B-5234	1-A

ROADWAY DESIGN ENGINEER

NORTH CAROLINA PROFESSIONAL SEAL 35018 ENGINEER JIMMY L. TERRY, JR.

02/23/10

STATE OF NORTH CAROLINA
DIVISION OF HIGHWAYS

INDEX OF SHEETS

SHEET NO.	SHEET
1	Title Sheet
1-A	Index of Sheets, General Notes, and Standard Drawings List
1-B	Conventional Symbols
2	Pavement Schedule, Typical Sections, and Bridge Typical
2-A & 2-B	Method of Pipe Installation
2-C	Detail of Anchorage for Frames
2-D	Detail of Shop Curved Guardrail Anchor Unit, Type B-77
2-E	Detail of Bridge Approach Fill Subregional Tier
3	Summary of Earthwork, Guardrail, and Asphalt Pavement Removal
3-A	Summary of Drainage
4	Plan and Profile Sheet
TCP-1 thru TCP-5	Traffic Control Plans
PM-1	Pavement Marking Plan
EC-1	Erosion Control Title Sheet
EC-2	Temporary Rock Silt Check - Type 'B' Detail
EC-2A	Temporary Rock Silt Check - Type 'A' with Excelsior Matting and Polyacrylamide (PAM) Detail
EC-3	Clearing and Grubbing Erosion Control Plan Sheet
EC-4	Final Erosion Control Plan Sheet
X-SUM	Earthwork Volume Summaries
X-1 thru X-6	Cross Sections
S-1 thru S-15	Structure Plans

GENERAL NOTES

2006 SPECIFICATIONS
EFFECTIVE: 07-18-06
REVISED: 09-12-08

GRADING AND SURFACING:

THE GRADE LINES SHOWN DENOTE THE FINISHED ELEVATION OF THE PROPOSED SURFACING AT GRADE POINTS SHOWN ON THE TYPICAL SECTIONS. GRADE LINES MAY BE ADJUSTED AT THEIR BEGINNING AND ENDING AND AT STRUCTURES AS DIRECTED BY THE ENGINEER IN ORDER TO SECURE A PROPER TIE-IN.

CLEARING:

CLEARING ON THIS PROJECT SHALL BE PERFORMED TO THE LIMITS ESTABLISHED BY METHOD II.

SUPERELEVATION:

ALL CURVES ON THIS PROJECT SHALL BE SUPERELEVATED IN ACCORDANCE WITH STD. NO. 225.04 USING THE RATE OF SUPERELEVATION AND RUNOFF SHOWN ON THE PLANS. SUPERELEVATION IS TO BE REVOLVED ABOUT THE GRADE POINTS SHOWN ON THE TYPICAL SECTIONS.

SHOULDER CONSTRUCTION:

ASPHALT, EARTH, AND CONCRETE SHOULDER CONSTRUCTION ON THE HIGH SIDE OF SUPERELEVATED CURVES SHALL BE IN ACCORDANCE WITH STD. NO. 560.01.

SIDE ROADS:

THE CONTRACTOR WILL BE REQUIRED TO DO ALL NECESSARY WORK TO PROVIDE SUITABLE CONNECTIONS WITH ALL ROADS, STREETS, AND DRIVES ENTERING THIS PROJECT. THIS WORK WILL BE PAID FOR AT THE CONTRACT UNIT PRICE FOR THE PARTICULAR ITEMS INVOLVED.

GUARDRAIL:

THE GUARDRAIL LOCATIONS SHOWN ON THE PLANS MAY BE ADJUSTED DURING CONSTRUCTION AS DIRECTED BY THE ENGINEER. THE CONTRACTOR SHOULD CONSULT WITH THE ENGINEER PRIOR TO ORDERING GUARDRAIL MATERIAL.

TEMPORARY SHORING:

SHORING REQUIRED FOR THE MAINTENANCE OF TRAFFIC WILL BE PAID FOR AS "EXTRA WORK" IN ACCORDANCE WITH SECTION 104-7.

SUBSURFACE PLANS:

NO SUBSURFACE PLANS ARE AVAILABLE ON THIS PROJECT. THE CONTRACTOR SHOULD MAKE HIS OWN INVESTIGATION AS TO THE SUBSURFACE CONDITIONS.

END BENTS:

THE ENGINEER SHALL CHECK THE STRUCTURE END BENT PLANS, DETAILS, AND CROSS-SECTION PRIOR TO SETTING OF THE SLOPE STAKES FOR THE EMBANKMENT OR EXCAVATION APPROACHING A BRIDGE.

RIGHT-OF-WAY MARKERS:

ALL RIGHT-OF-WAY MARKERS ON THIS PROJECT SHALL BE PLACED BY OTHERS.

STANDARD DRAWINGS

2006 ROADWAY ENGLISH STANDARD DRAWINGS
EFF. 07-18-06
REV. 01-02-07

The following Roadway Standards as appear in "Roadway Standard Drawings" Highway Design Branch - N. C. Department of Transportation - Raleigh, N. C., Dated July 18, 2006 are applicable to this project and by reference hereby are considered a part of these plans:

STD.NO.	TITLE
DIVISION 2 - EARTHWORK	
200.02	Method of Clearing - Method II
225.02	Guide for Grading Subgrade - Secondary and Local
225.04	Method of Obtaining Superelevation - Two Lane Pavement
DIVISION 3 - PIPE CULVERTS	
310.10	Driveway Pipe Construction
DIVISION 4 - MAJOR STRUCTURES	
422.10	Reinforced Bridge Approach Fills
DIVISION 5 - SUBGRADE, BASES AND SHOULDERS	
560.01	Method of Shoulder Construction - High Side of Superelevated Curve - Method I
DIVISION 8 - INCIDENTALS	
840.29	Frames and Narrow Slot Flat Grates
840.35	Traffic Bearing Grated Drop Inlet - for Cast Iron Double Frame and Grates
840.46	Traffic Bearing Precast Drainage Structure
840.66	Drainage Structure Steps
846.01	Concrete Curb, Gutter and Curb & Gutter
846.04	Drop Inlet Installation in Shoulder Berm Gutter
862.01	Guardrail Placement
862.02	Guardrail Installation
862.03	Structure Anchor Units
862.04	Anchoring End of Guardrail - B-77 and B-83 Anchor Units

PROJECT REFERENCE NO.	SHEET NO.
B-5234	1-B

Note: Not to Scale

**S.U.E. = Subsurface Utility Engineering*

STATE OF NORTH CAROLINA
DIVISION OF HIGHWAYS

CONVENTIONAL PLAN SHEET SYMBOLS

BOUNDARIES AND PROPERTY:

- State Line
- County Line
- Township Line
- City Line
- Reservation Line
- Property Line
- Existing Iron Pin — EIP
- Property Corner
- Property Monument — ECM
- Parcel/Sequence Number — 123
- Existing Fence Line
- Proposed Woven Wire Fence
- Proposed Chain Link Fence
- Proposed Barbed Wire Fence
- Existing Wetland Boundary — WLB
- Proposed Wetland Boundary — WLB
- Existing Endangered Animal Boundary — EAB
- Existing Endangered Plant Boundary — EPB

BUILDINGS AND OTHER CULTURE:

- Gas Pump Vent or U/G Tank Cap
- Sign — S
- Well — W
- Small Mine
- Foundation
- Area Outline
- Cemetery
- Building
- School
- Church
- Dam

HYDROLOGY:

- Stream or Body of Water
- Hydro, Pool or Reservoir
- Jurisdictional Stream — JS
- Buffer Zone 1 — BZ 1
- Buffer Zone 2 — BZ 2
- Flow Arrow
- Disappearing Stream
- Spring
- Wetland
- Proposed Lateral, Tail, Head Ditch — FLOW
- False Sump

RAILROADS:

- Standard Gauge — CSX TRANSPORTATION
- RR Signal Milepost — MILEPOST 35
- Switch — SWITCH
- RR Abandoned
- RR Dismantled

RIGHT OF WAY:

- Baseline Control Point
- Existing Right of Way Marker
- Existing Right of Way Line
- Proposed Right of Way Line — RW
- Proposed Right of Way Line with Iron Pin and Cap Marker — RW
- Proposed Right of Way Line with Concrete or Granite Marker — RW
- Existing Control of Access — CA
- Proposed Control of Access — CA
- Existing Easement Line — E
- Proposed Temporary Construction Easement — E
- Proposed Temporary Drainage Easement — TDE
- Proposed Permanent Drainage Easement — PDE
- Proposed Permanent Drainage / Utility Easement — DUE
- Proposed Permanent Utility Easement — PUE
- Proposed Temporary Utility Easement — TUE
- Proposed Permanent Easement with Iron Pin and Cap Marker

ROADS AND RELATED FEATURES:

- Existing Edge of Pavement
- Existing Curb
- Proposed Slope Stakes Cut — C
- Proposed Slope Stakes Fill — F
- Proposed Wheel Chair Ramp — WCR
- Existing Metal Guardrail
- Proposed Guardrail
- Existing Cable Guiderail
- Proposed Cable Guiderail
- Equality Symbol
- Pavement Removal

VEGETATION:

- Single Tree
- Single Shrub
- Hedge
- Woods Line
- Orchard
- Vineyard — Vineyard

EXISTING STRUCTURES:

MAJOR:

- Bridge, Tunnel or Box Culvert — CONC
- Bridge Wing Wall, Head Wall and End Wall — CONC WW

MINOR:

- Head and End Wall — CONC HW
- Pipe Culvert
- Footbridge
- Drainage Box: Catch Basin, DI or JB — CB
- Paved Ditch Gutter
- Storm Sewer Manhole — S
- Storm Sewer — S

UTILITIES:

POWER:

- Existing Power Pole
- Proposed Power Pole
- Existing Joint Use Pole
- Proposed Joint Use Pole
- Power Manhole — P
- Power Line Tower
- Power Transformer
- U/G Power Cable Hand Hole — HH
- H-Frame Pole
- Recorded U/G Power Line — P
- Designated U/G Power Line (S.U.E.*) — P

TELEPHONE:

- Existing Telephone Pole
- Proposed Telephone Pole
- Telephone Manhole — T
- Telephone Booth
- Telephone Pedestal — T
- Telephone Cell Tower
- U/G Telephone Cable Hand Hole — HH
- Recorded U/G Telephone Cable — T
- Designated U/G Telephone Cable (S.U.E.*) — T
- Recorded U/G Telephone Conduit — TC
- Designated U/G Telephone Conduit (S.U.E.*) — TC
- Recorded U/G Fiber Optics Cable — T FO
- Designated U/G Fiber Optics Cable (S.U.E.*) — T FO

WATER:

- Water Manhole — W
- Water Meter
- Water Valve
- Water Hydrant
- Recorded U/G Water Line — W
- Designated U/G Water Line (S.U.E.*) — W
- Above Ground Water Line — A/G Water

TV:

- TV Satellite Dish
- TV Pedestal — C
- TV Tower
- U/G TV Cable Hand Hole — HH
- Recorded U/G TV Cable — TV
- Designated U/G TV Cable (S.U.E.*) — TV
- Recorded U/G Fiber Optic Cable — TV FO
- Designated U/G Fiber Optic Cable (S.U.E.*) — TV FO

GAS:

- Gas Valve
- Gas Meter
- Recorded U/G Gas Line — G
- Designated U/G Gas Line (S.U.E.*) — G
- Above Ground Gas Line — A/G Gas

SANITARY SEWER:

- Sanitary Sewer Manhole
- Sanitary Sewer Cleanout
- U/G Sanitary Sewer Line — SS
- Above Ground Sanitary Sewer — A/G Sanitary Sewer
- Recorded SS Forced Main Line — FSS
- Designated SS Forced Main Line (S.U.E.*) — FSS

MISCELLANEOUS:

- Utility Pole
- Utility Pole with Base
- Utility Located Object
- Utility Traffic Signal Box — S
- Utility Unknown U/G Line — TUTL
- U/G Tank; Water, Gas, Oil
- A/G Tank; Water, Gas, Oil
- U/G Test Hole (S.U.E.*)
- Abandoned According to Utility Records — AATUR
- End of Information — E.O.I.

TGS ENGINEERS
SUITE 141
975 WALNUT STREET
CARY, NC 27511
PH (919) 319-8850

PROJECT REFERENCE NO.	SHEET NO.
B-5234	2

ROADWAY DESIGN ENGINEER
NORTH CAROLINA PROFESSIONAL SEAL 35018 ENGINEER JIMMY L. TERRY JR.
02/25/10

PAVEMENT DESIGN ENGINEER
NORTH CAROLINA PROFESSIONAL SEAL 22096 ENGINEER CLARK S. MORRISON
2/25/10

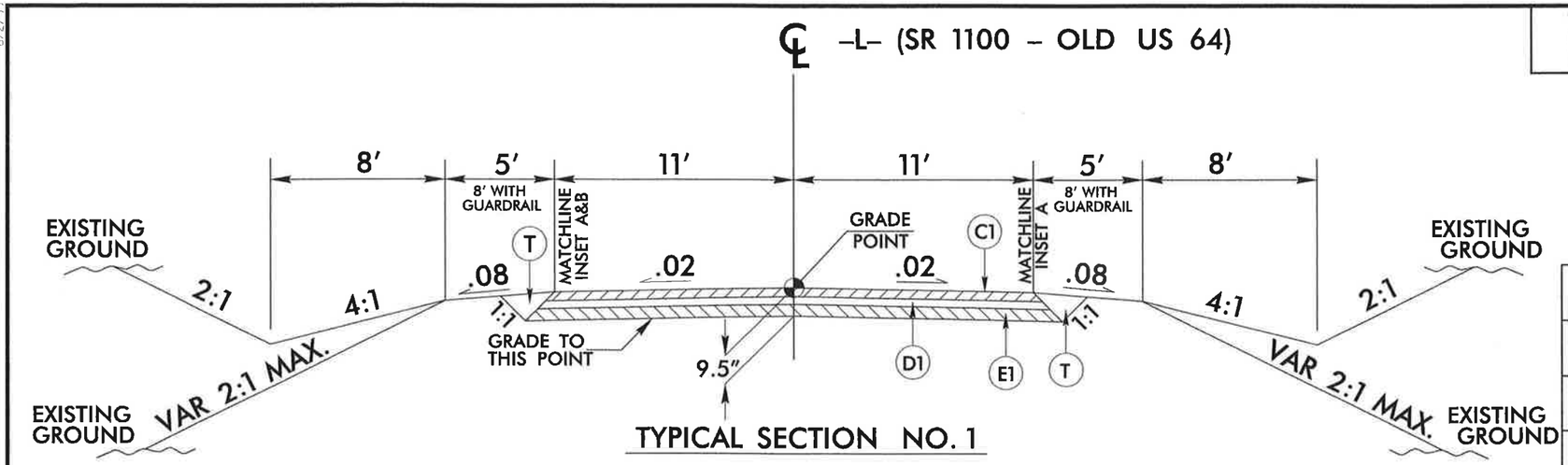

TYPICAL SECTION NO. 1

USE TYPICAL SECTION NO.1 AS FOLLOWS:

-L- STA. 11+40.00 TO 12+14.77 (BEGIN BRIDGE)
-L- STA. 12+72.23 (END BRIDGE) TO 13+30.00

NOTE: TRANSITION FROM EXISTING TO TYPICAL SECTION NO.1 FROM -L- STATION 11+10.00 TO 11+40.00 AND FROM 13+30.00 TO 13+60.00

PAVEMENT SCHEDULE	
C1	PROP. APPROX. 3" ASPHALT CONCRETE SURFACE COURSE, TYPE S9.5B, AT AN AVERAGE RATE OF 168 LBS. PER SQ. YD. IN EACH OF TWO LAYERS.
D1	PROP. APPROX. 2½" ASPHALT CONCRETE SURFACE COURSE, TYPE I19.0B, AT AN AVERAGE RATE OF 285 LBS. PER SQ. YD.
E1	PROP. APPROX. 4" ASPHALT CONCRETE BASE COURSE, TYPE B25.0B, AT AN AVERAGE RATE OF 456 LBS. PER SQ. YD.
E2	PROP. APPROX. 4½" ASPHALT CONCRETE BASE COURSE, TYPE B25.0B, AT AN AVERAGE RATE OF 513 LBS. PER SQ. YD.
R	SHOULDER BERM GUTTER.
T	EARTH MATERIAL.

NOTE: PAVEMENT EDGE SLOPES ARE 1:1 UNLESS SHOWN OTHERWISE.

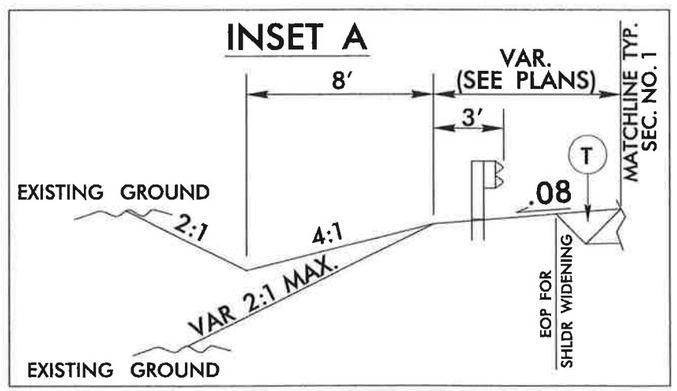

USE INSET 'A' FOR ALL SHOULDER WIDENING AREAS ADJACENT TO PROPOSED GUARDRAIL (SEE PLANS)

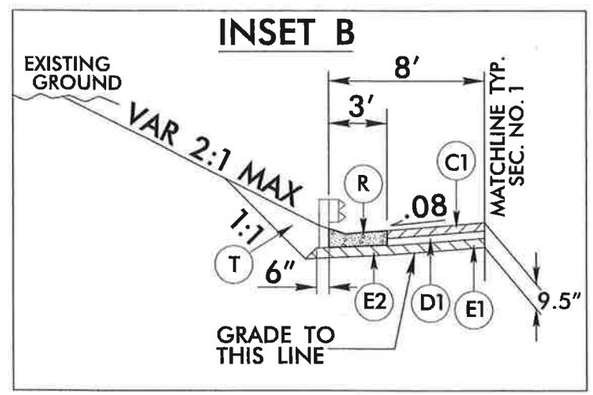

USE INSET 'B' AS FOLLOWS:

-L- STA. 12+72.23 (END BRIDGE) TO 13+30.00 LT

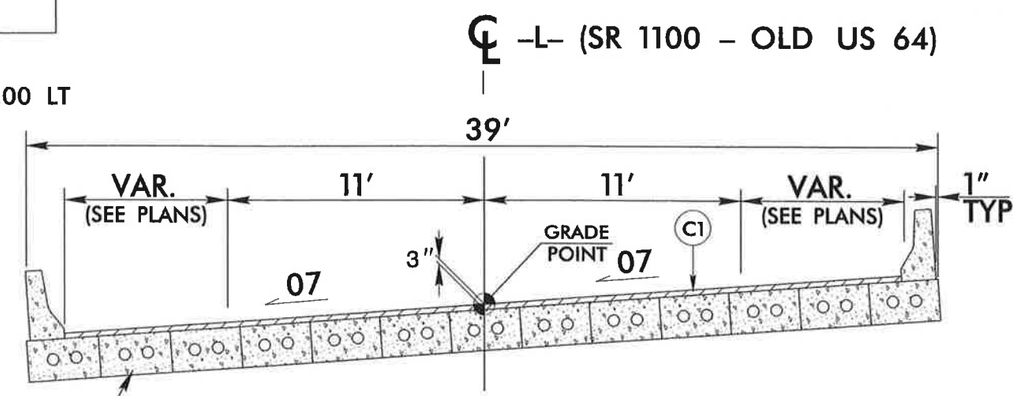

TYPICAL SECTION ON STRUCTURE

-L- STA. 12+14.77 TO 12+72.23

8/2/99
2/22/2010
11:56:23 AM
MA140248_RDY_Typ.dgn

08-SEP-2009 08:24
s:\contracts\contracts\special details\ericward\stds\06' stds to special details\30001\03000d01.dgn
jhowerton AT P5237001

5/14/99

STATE OF NORTH CAROLINA
DEPT. OF TRANSPORTATION
DIVISION OF HIGHWAYS
RALEIGH, N.C.

7-06

ENGLISH DETAIL DRAWING FOR
METHOD OF PIPE INSTALLATION
FLEXIBLE PIPE

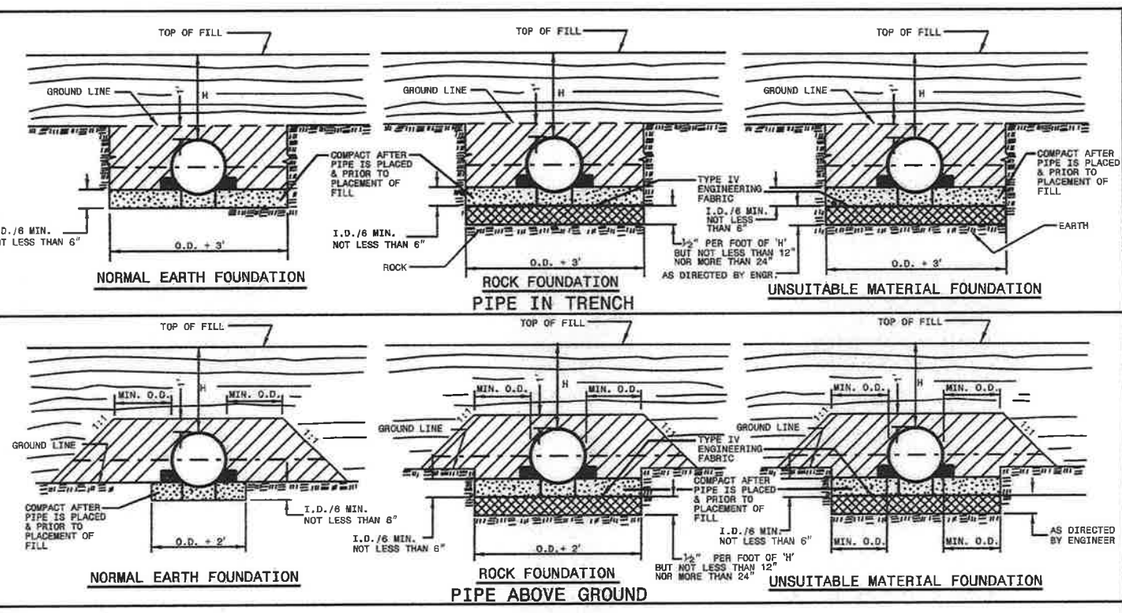

GENERAL NOTES:

I.D. = THE MAXIMUM HORIZONTAL INSIDE DIAMETER DIMENSION.

O.D. = THE MAXIMUM HORIZONTAL OUTSIDE DIAMETER DIMENSION.

H = THE FILL HEIGHT MEASURED VERTICALLY AT ANY POINT ALONG THE PIPE FROM THE TOP OF THE PIPE TO THE TOP OF THE EMBANKMENT AT THAT POINT.

TAKE CARE TO FULLY COMPACT HAUNCH ZONE OF PIPE BACKFILL.

LOOSELY PLACED SELECT MATERIAL CLASS III OR CLASS II, TYPE 1 FOR PIPE BEDDING. LEAVE SECTION DIRECTLY BENEATH PIPE UNCOMPACTED AS PIPE SEATING AND BACKFILL WILL ACCOMPLISH COMPACTION.

DO NOT OPERATE HEAVY EQUIPMENT OVER ANY PIPE CULVERT UNTIL THE PIPE CULVERT HAS BEEN PROPERLY BACKFILLED AND COVERED WITH AT LEAST 3 FEET OF APPROVED MATERIAL.

SPRINGLINE OF PIPE

SELECT BACKFILL MATERIAL CLASS III OR CLASS II, TYPE 1 ABOVE AND BELOW SPRINGLINE.

APPROVED SUITABLE LOCAL MATERIAL.

UNDISTURBED EARTH MATERIAL

SELECT MATERIAL CLASS V OR VI FOR FOUNDATION CONDITIONING. ENCAPSULATE WITH ENGINEERING FABRIC AS DIRECTED BY THE ENGINEER.

SHEET 1 OF 3
300D01

STATE OF NORTH CAROLINA
DEPT. OF TRANSPORTATION
DIVISION OF HIGHWAYS
RALEIGH, N.C.

7-06

ENGLISH DETAIL DRAWING FOR
METHOD OF PIPE INSTALLATION
RIGID PIPE

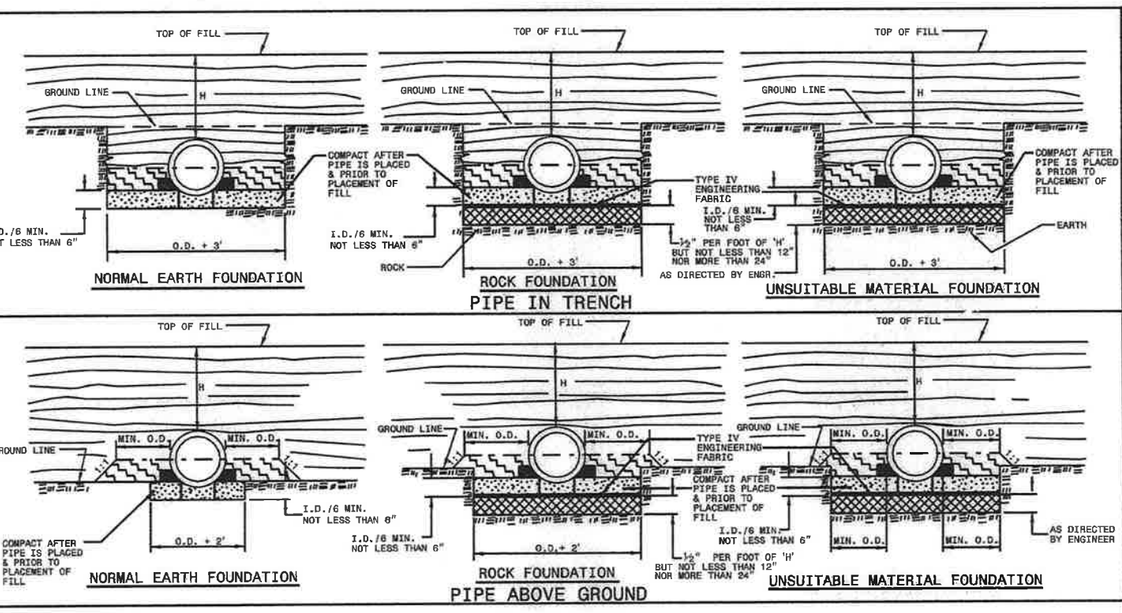

GENERAL NOTES:

I.D. = THE MAXIMUM HORIZONTAL INSIDE DIAMETER DIMENSION.

O.D. = THE MAXIMUM HORIZONTAL OUTSIDE DIAMETER DIMENSION.

H = THE FILL HEIGHT MEASURED VERTICALLY AT ANY POINT ALONG THE PIPE FROM THE TOP OF THE PIPE TO THE TOP OF THE EMBANKMENT AT THAT POINT.

TAKE CARE TO FULLY COMPACT HAUNCH ZONE OF PIPE BACKFILL.

LOOSELY PLACED SELECT MATERIAL CLASS III OR CLASS II, TYPE 1 FOR PIPE BEDDING. LEAVE SECTION DIRECTLY BENEATH PIPE UNCOMPACTED AS PIPE SEATING AND BACKFILL WILL ACCOMPLISH COMPACTION.

DO NOT OPERATE HEAVY EQUIPMENT OVER ANY PIPE CULVERT UNTIL THE PIPE CULVERT HAS BEEN PROPERLY BACKFILLED AND COVERED WITH AT LEAST 3 FEET OF APPROVED MATERIAL.

SPRINGLINE OF PIPE

SELECT BACKFILL MATERIAL CLASS III OR CLASS II, BELOW SPRINGLINE.

APPROVED SUITABLE LOCAL MATERIAL ABOVE SPRINGLINE.

UNDISTURBED EARTH MATERIAL

SELECT MATERIAL CLASS V OR VI FOR FOUNDATION CONDITIONING. ENCAPSULATE WITH ENGINEERING FABRIC AS DIRECTED BY THE ENGINEER.

SHEET 2 OF 3
300D01

PROJECT SERVICES UNIT
STANDARDS AND SPECIAL DESIGN
Office 919-250-4128 FAX 919-250-4119

SEE PLATE FOR TITLE

ORIGINAL BY: Rkeepf
MODIFIED BY:
CHECKED BY: DATE: 8-11-09
FILE SPEC: DATE:

PROJECT REFERENCE NO. B-5234
SHEET NO. 2-A

STATE OF NORTH CAROLINA
DEPT. OF TRANSPORTATION
DIVISION OF HIGHWAYS
RALEIGH, N.C.

7-06

ENGLISH DETAIL DRAWING FOR
METHOD OF PIPE INSTALLATION
FILL HEIGHT TABLES

SHEET 3 OF 3
300D01

FLEXIBLE PIPE

Round Corrugated Steel Pipe
2 2/3 x ½ corrugation **

Diameter (inches)	Minimum cover (inches)	Maximum Height of Cover (feet) (Ga) 16	14	12	10	8
12	12	204	256			
15	12	162	204			
18	12	135	169	239		
21	12	115	145	204		
24	12	100	126	178		
30	12	79	100	142		
36	12	65	83	117	152	
42	12	55	70	100	130	160
48	12	48	61	87	113	139
54	12		54	77	100	123
60	12			69	90	111
66	12				81	100
72	12				74	91
78	12					81
84	12					69

Round Corrugated Aluminum Pipe
2 2/3 x ½ corrugation **

Diameter (inches)	Minimum cover (inches)	Maximum Height of Cover (feet) (Ga) 16	14	12	10	8
12	12	123	155	218	281	344
15	12	98	123	174	224	275
18	12	81	102	144	187	228
21	12	69	87	123	160	195
24	12	60	76	108	139	171
27	12		67	95	123	151
30	12		60	85	111	136
36	12		50	71	92	113
42	12			60	78	96
48	12			52	68	84
54	12			48	50	74
60	12				50	62
66	12					51
72	12					41

** FOR DIFFERENT CORRUGATIONS AND ARCH PIPES REFER TO ROADWAY DESIGN MANUAL OR MANUFACTURERS SPECIFICATION.

HDPE - * (Minimum fill) 2' for pipe diameters ≥ 12" and ≤ 60"
* (Maximum fill) 20' for pipe diameters ≤ 24"
17' for pipe diameters ≥ 30" and ≤ 60"

PVC - * (Minimum fill) 2' for pipe diameters ≥ 12" and ≤ 36"
* (Maximum fill) 30' for pipe diameters ≥ 12" and ≤ 36"

* FILL HEIGHT IS MEASURED FROM THE TOP OF THE PIPE TO THE BOTTOM OF THE PAVEMENT STRUCTURE

REFER TO THE FOLLOWING FOR PIPE SPECIFICATIONS

CSP - AASHTO M36
CAAP - AASHTO M196
HDPE - AASHTO M294
PVC - ASTM F949 or AASHTO M304

NOTES: FILL HEIGHTS SHOWN WERE CALCULATED USING AASHTO LRFD BRIDGE DESIGN SPECIFICATIONS

1' MINIMUM COVER FOR ALL SIDE DRAIN PIPE IN ACCORDANCE WITH THE STANDARD SPECIFICATIONS

RIGID PIPE

RCP - * (Minimum fill) 1' for Class IV & CLASS V
2' for Class III & Class II

* (Maximum fill) 10' - Class II pipe
20' - Class III pipe
30' - Class IV pipe
40' - Class V pipe

(For fills > 40' & < 80' use LRFD Direct Design Method)

* FILL HEIGHT IS MEASURED FROM THE TOP OF THE PIPE TO THE BOTTOM OF THE PAVEMENT STRUCTURE

REFER TO THE FOLLOWING FOR PIPE SPECIFICATIONS

RCP - AASHTO M170

NOTES: FILL HEIGHTS SHOWN WERE CALCULATED USING AASHTO LRFD BRIDGE DESIGN SPECIFICATIONS

1' MINIMUM COVER FOR ALL SIDE DRAIN PIPE IN ACCORDANCE WITH THE STANDARD SPECIFICATIONS

STATE OF NORTH CAROLINA
DEPT. OF TRANSPORTATION
DIVISION OF HIGHWAYS
RALEIGH, N.C.

7-06

ENGLISH DETAIL DRAWING FOR
METHOD OF PIPE INSTALLATION
FILL HEIGHT TABLES

SHEET 3 OF 3
300D01

PROJECT SERVICES UNIT
STANDARDS AND SPECIAL DESIGN
OFFICE 919-250-4128 FAX 919-250-4119

SEE PLATE FOR TITLE

ORIGINAL BY: DATE: 5-15-09
MODIFIED BY: DATE:
CHECKED BY: DATE:
FILE SPEC: s:\contracts\contracts\special details\eriswerd\stds\06' stds to special details\30001\0300d01.dgn

PROJECT REFERENCE NO. B-5234
SHEET NO. 2-B

PROJECT REFERENCE NO.	SHEET NO.
B-5234	2-C

STATE OF
NORTH CAROLINA
DEPT. OF TRANSPORTATION
DIVISION OF HIGHWAYS
RALEIGH, N.C.

ENGLISH DETAIL DRAWING FOR
ANCHORAGE FOR FRAMES
BRICK/CONCRETE/PRECAST CONCRETE

SHEET 1 OF 1
840D25

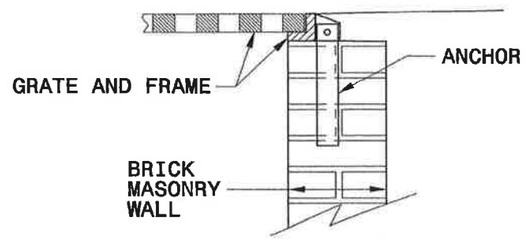

BRICK MASONRY CONSTRUCTION

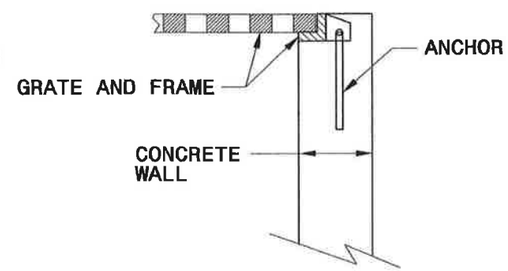

CONCRETE CONSTRUCTION

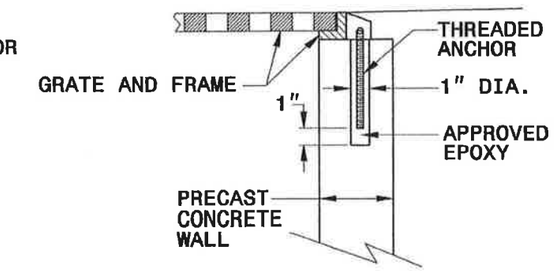

PRECAST CONCRETE CONSTRUCTION

DETAIL SHOWING ANCHORAGE OF FRAME FOR GRATED DROP INLET

NOTE:
CONSTRUCT GRATED DROP INLET TO COINCIDE WITH NORMAL OR SUPERELEVATED SHOULDER OR PAVEMENT SLOPE.

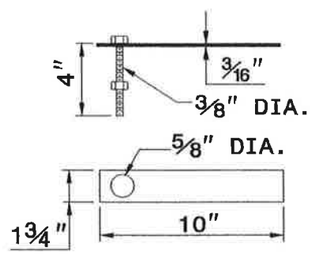

MASONRY ANCHOR
3/8" DIA. BOLT WITH PLATE

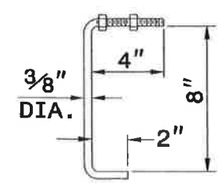

CONCRETE ANCHOR
3/8" DIA. BENT BAR

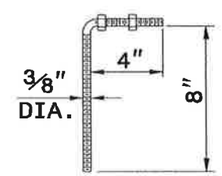

PRECAST CONCRETE ANCHOR
3/8" DIA. BENT BAR

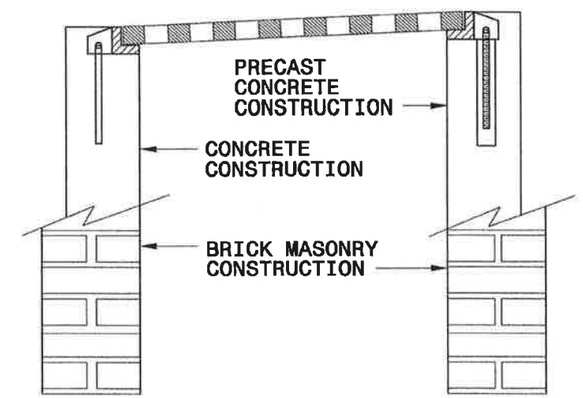

FRAME AND GRATE INSTALLATION FOR NORMAL CROWN AND SUPERELEVATED SECTIONS

STATE OF
NORTH CAROLINA
DEPT. OF TRANSPORTATION
DIVISION OF HIGHWAYS
RALEIGH, N.C.

ENGLISH DETAIL DRAWING FOR
ANCHORAGE FOR FRAMES
BRICK/CONCRETE/PRECAST CONCRETE

SHEET 1 OF 1
840D25

PROJECT SERVICES UNIT
STANDARDS AND SPECIAL DESIGN
Office 919-250-4128 FAX 919-250-4119

SEE PLATE FOR TITLE

ORIGINAL BY: 2006 STD 840.25 DATE: 07/18/06
MODIFIED BY: E.E. WARD DATE: 9/25/06
CHECKED BY: DATE:
FILE SPEC.:

27-SEP-2006 08:59
S:\Contracts\Contracts\Special Details\erieward\sids\06; Stds to Special Details\84025 Anchorage for Frames\0840d25.dgn
erieward
AT PS222293

27-JUN-2006 11:50
S:\Contracts\Contracts\Special Details\ericward\Misc.guardrail\NCHRP350 Approved\B-77 ConnDot.dgn
ericward AT PS222293

STATE OF NORTH CAROLINA
DEPT. OF TRANSPORTATION
DIVISION OF HIGHWAYS
RALEIGH, N.C.

ENGLISH DETAIL DRAWING FOR
GUARDRAIL ANCHOR UNIT TYPE B-77 SHOP CURVED

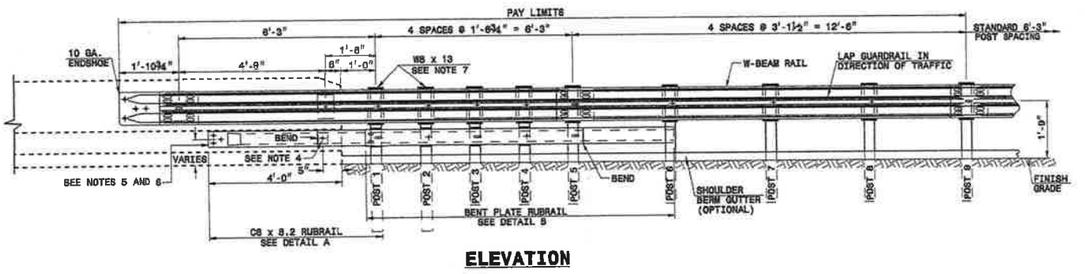

ELEVATION

GENERAL NOTES:
1) POSTS 1 THROUGH 5 REQUIRE AN ADDITIONAL HOLE TO ATTACH LOWER BLOCKOUTS AND/OR RUBRAIL.
2) RUBRAIL BLOCKOUTS LOCATED ON POSTS 1 THROUGH 4 ARE OFFSET DRILLED AND SECURED WITH ⅝" BUTTONHEAD BOLTS (SEE CHART FOR BOLT LENGTHS). SECURE BLOCKS ONLY TO POSTS 2 AND 4. SECURE RUBRAIL AND BLOCKOUTS TO POSTS 1 AND 3. RUBRAIL IS SECURED TO POST 5 WITH A ⅝" x 4½" BUTTONHEAD BOLT. RUBRAIL IS FLARED TO BACK OF POST 6 AND NOT SECURED.
3) STEEL SPACER TUBE IS A SCHEDULE 40 GALVANIZED PIPE 6" INSIDE DIAMETER x 9" LONG. ATTACH TUBE TO GUARDRAIL ONLY WITH ⅝" x 1¼" LONG BUTTONHEAD BOLT AND RECTANGULAR PLATE WASHER.
4) SEE DETAIL D FOR SLOPED RUBRAIL BLOCKOUT. BLOCKOUT IS ATTACHED TO RAIL ELEMENT ONLY. USE ⅝" x 3" LAG BOLT WITH FLAT WASHER.
5) SHOP FABRICATE THE C6 x 8.2 RUBRAIL END TO BE CONSISTENT WITH THE SLOPE OF THE JERSEY SHAPE AND ATTACH FLUSH WITH THE SLOPED TOE OF THE BARRIER OR BRIDGE RAIL.
6) ANCHORAGE:
   (a) AT EXISTING BRIDGE RAIL AND NEW OR EXISTING BARRIERS, RUBRAIL SHALL BE ANCHORED USING THREE ⅝" x 6" CHEMICALLY ANCHORED BOLTS WITH WASHERS. MAXIMUM PROJECTION FOR BOLTS SHALL BE ½".
   (b) AT EXISTING BRIDGE RAIL AND NEW OR EXISTING BARRIERS, THE W-BEAM END SHOE SHALL BE ANCHORED USING A 4 BOLT HOLD DOWN PLATE. A 4 BOLT INSERT ASSEMBLY IS ALLOWED ON PRECAST REINFORCED CONCRETE BARRIER (SEE B57D01). THE W-BEAM END SHOE SHALL BE INSTALLED BEHIND THE NESTED W-BEAM ELEMENTS.
   (c) AT NEW BRIDGE RAIL, THE W-BEAM END SHOE AND RUBRAIL SHALL BE ANCHORED AS DETAILED ON THE STRUCTURE PLANS.
7) POSTS 1 AND 2 ARE W8 x 13, 7'-6" LONG. ALL OTHER POSTS IN THE ANCHOR UNIT ARE W6 x 8.5.

SEE ROADWAY PLANS FOR END TREATMENT

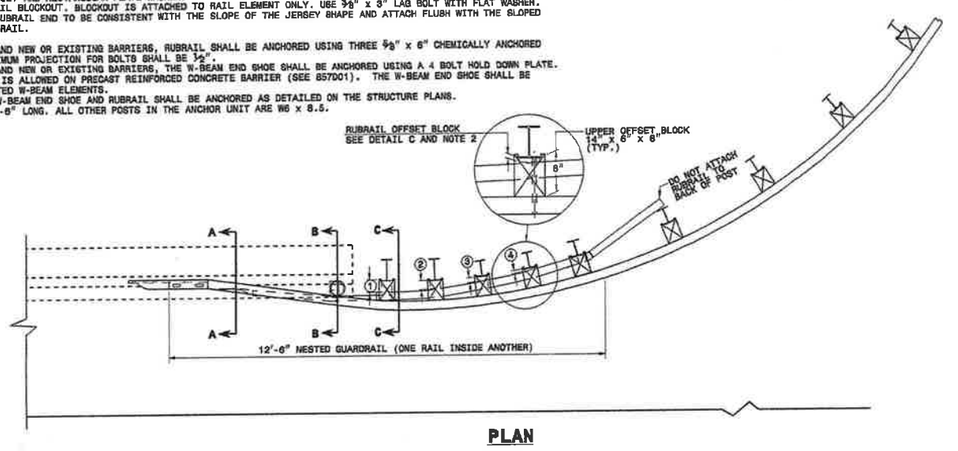

PLAN

GUARDRAIL ANCHOR UNIT TYPE B-77

SHEET 1 OF 2
B-77SC

STATE OF NORTH CAROLINA
DEPT. OF TRANSPORTATION
DIVISION OF HIGHWAYS
RALEIGH, N.C.

ENGLISH DETAIL DRAWING FOR
GUARDRAIL ANCHOR UNIT TYPE B-77 SHOP CURVED

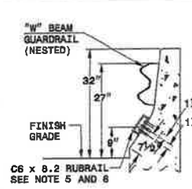

SECTION A-A

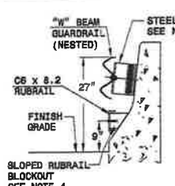

SECTION B-B

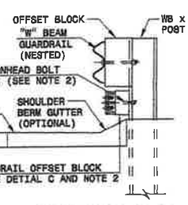

SECTION C-C

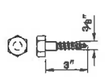

DETAIL E
LAG BOLT

PLAN

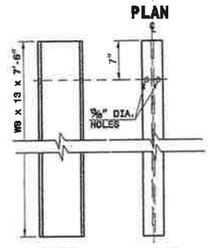

SIDE **FRONT**

DETAIL F STEEL POST
"W8 X 13 X 7'-6"

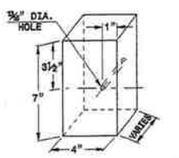

DETAIL C
RUBRAIL BLOCKOUT

RUBRAIL BLOCKS 7" HIGH x 4" WIDE		
POST	THICKNESS	BOLT LENGTH
1	4¼"	8"
2	3¼"	8"*
3	2"	8"
4	1"	8"*

* BOLTS FOR POSTS 2 AND 4 ARE USED TO ATTACH BLOCK TO POST. RUBRAIL NOT ATTACHED TO BLOCK.

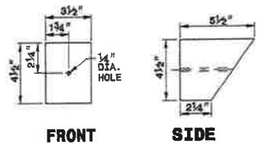

FRONT **SIDE**

DETAIL D
SLOPED RUBRAIL BLOCKOUT

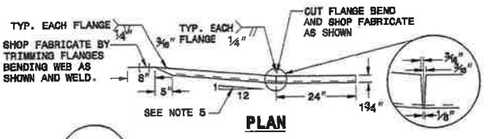

PLAN

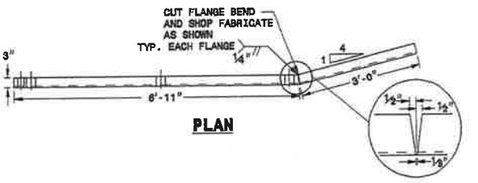

PLAN

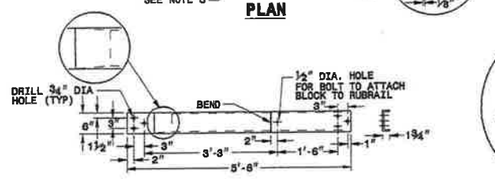

ELEVATION
DETAIL A
C6 x 8.2 RUBRAIL

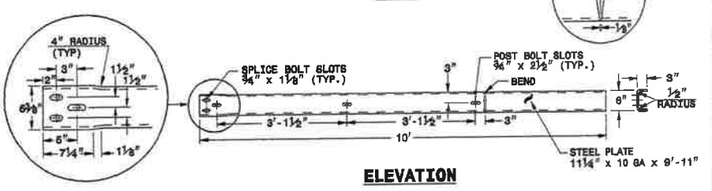

ELEVATION
DETAIL B
BENT PLATE RUBRAIL

GUARDRAIL ANCHOR UNIT TYPE B-77

SHEET 2 OF 2
B-77SC

STATE OF NORTH CAROLINA
DEPT. OF TRANSPORTATION
DIVISION OF HIGHWAYS
RALEIGH, N.C.

ENGLISH DETAIL DRAWING FOR
GUARDRAIL ANCHOR UNIT TYPE B-77 SHOP CURVED

PROJECT SERVICES UNIT
STANDARDS AND SPECIAL DESIGN
Office 919-250-4128 FAX 919-250-4119

SEE PLATE FOR TITLE

ORIGINAL BY: E.E. WARD DATE: 06-04-04
MODIFIED BY: DATE:
CHECKED BY: DATE:
FILE SPEC.: m:\guardrail\NCHRP350\DV04\B-77.dgn

PROJECT REFERENCE NO. B-5234
SHEET NO. 2-D

PROJECT REFERENCE NO.	SHEET NO.
B-5234	2-E

PLAN VIEW
12' APPROACH SLAB

STATE OF NORTH CAROLINA DEPT. OF TRANSPORTATION DIVISION OF HIGHWAYS RALEIGH, N.C.

ENGLISH DETAIL DRAWING FOR
BRIDGE APPROACH FILLS
CORED SLAB & BOX BEAM BRIDGES
SUB REGIONAL TIER

SHEET 1 OF 2
422D11

SECTION A-A

SECTION B-B

12' APPROACH SLAB

STATE OF NORTH CAROLINA DEPT. OF TRANSPORTATION DIVISION OF HIGHWAYS RALEIGH, N.C.

ENGLISH DETAIL DRAWING FOR
BRIDGE APPROACH FILLS
CORED SLAB & BOX BEAM BRIDGES
SUB REGIONAL TIER

SHEET 2 OF 2
422D11

PROJECT SERVICES UNIT
STANDARDS AND SPECIAL DESIGN
Office 919-250-4128 FAX 919-250-4119

BRIDGE APPROACH FILLS
CORED SLAB & BOX BEAM BRIDGES
SUB REGIONAL TIER

ORIGINAL BY: K. A. Kempf DATE: 6-10-08
MODIFIED BY: DATE:
CHECKED BY: DATE:
FILE SPEC.: kkempf\english\bridge approach fills.dgn

01-JUN-2009 14:15
s:\contracts\contracts\special details\eriward\stds\06' stds to special details\4221\bridge approach fill sub reg ter.dgn
.jhowerton AT PS237501

COMPUTED BY: JLT DATE: 2/15/10
CHECKED BY: WCP DATE: 2/16/10

PROJECT NO.	SHEET NO.
B-5234	3

STATE OF NORTH CAROLINA
DIVISION OF HIGHWAYS

SUMMARY OF EARTHWORK

Line	Station	Station	Uncl. Excav.	Undercut Excav.	Embank. +%	Borrow	Waste
-L-	11+10.00	12+14.77	177		230	53	
BRIDGE							
-L-	12+72.23	14+31.25	270		400	130	
PROJECT TOTALS			447		630	183	
Loss due to Clearing & Grubbing			-22			22	
Est. 5% to replace Topsoil on Borrow Pits						10	
GRAND TOTAL			425		630	215	
SAY			470			240	

Token Undercut = 100 yd^3

SUMMARY OF EXISTING ASPHALT PAVEMENT REMOVAL

Line	Station	Station	Location LT/RT/CL	SY
-L-	11+40.00	12+41.64	CL	210.3
-L-	12+60.81	13+30.00	CL	133.4
			TOTAL:	343.7
			SAY:	350

"N" = DISTANCE FROM EDGE OF LANE TO FACE OF GUARDRAIL
TOTAL SHOULDER WIDTH = DISTANCE FROM EDGE OF TRAVEL LANE TO SHOULDER BREAK POINT.
FLARE LENGTH = DISTANCE FROM LAST SECTION OF PARALLEL GUARDRAIL TO END OF GUARDRAIL.
W = TOTAL WIDTH OF FLARE FROM BEGINNING OF TAPER TO END OF GUARDRAIL.
G = GATING IMPACT ATTENUATOR TYPE 350

NOTE: APPROXIMATE QUANTITIES ONLY. UNCLASSIFIED EXCAVATION, BORROW EXCAVATION, FINE GRADING, CLEARING AND GRUBBING, AND REMOVAL OF EXISTING PAVEMENT WILL BE PAID FOR AT THE CONTRACT LUMP SUM PRICE FOR "GRADING".

GUARDRAIL SUMMARY

LINE	BEG. STA.	END STA.	LOC.	LENGTH STRAIGHT	LENGTH SHOP CURVED	LENGTH DOUBLE FACED	WARRANT POINT APPR. END	WARRANT POINT TRAIL. END	"N" DIST FROM E.O.L.	TOTAL SHLDR WIDTH	FLARE LENGTH APPR. END	FLARE LENGTH TRAIL. END	W APPR. END	W TRAIL. END	ANCHORS GRAU 350 TL-2	ANCHORS CAT-1	ANCHORS AT-1	ANCHORS B-77*	ANCHORS Xi MOD	ANCHORS M-350		IMP. ATTEN. TYPE 350 EA	IMP. ATTEN. TYPE 350 G	IMP. ATTEN. TYPE 350 NG	REMOVE EXISTING GRDRAIL	REMARKS
-L-	11+82+/-	12+17.24	RT	12.5	37.5		BRIDGE		6.8'	12'+/-	12.5		0.25				1	1								*SHOP CURVED TYPE B-77 ANCHOR (SEE DETAIL SHEET 2-D)
-L-	11+18.25	12+12.00	LT	75	18.75			BRIDGE	6.8'	9.8'		25		0.5	1			1								*SHOP CURVED TYPE B-77 ANCHOR (SEE DETAIL SHEET 2-D)
-L-	12+69.76	SEE PLANS	RT		62.5			BRIDGE	6.8'	9.8'							1	1								*SHOP CURVED TYPE B-77 ANCHOR (SEE DETAIL SHEET 2-D)
-L-	12+75.00	14+31.25	LT	137.5	18.75		BRIDGE		6.8'	9.8'	25		0.5		1			1								*SHOP CURVED TYPE B-77 ANCHOR (SEE DETAIL SHEET 2-D)
		SUB-TOTALS:		225.00	137.5																					
	LESS ANCHOR DEDUCTIONS																									
	GRAU-350 TYPE TL2	2@25 ft		50																						
	TYPE AT-1	2@6.25 ft			12.5																					
	TYPE B-77	4@ 18.75 ft			75																					
		ANCHOR TOTALS:		50	87.5																					
		GRAND TOTALS:		175	50										2		2	4								
		SAY:		175	75										2		2 *	4								

ADDITIONAL GUARDRAIL POSTS = 5 EA

COMPUTED BY:	JLT	DATE:	2/15/2010
CHECKED BY:	JLT	DATE:	2/15/2010

PROJECT NO.	SHEET NO.
B-5234	3-A

STATE OF NORTH CAROLINA
DIVISION OF HIGHWAYS

LIST OF PIPES, ENDWALLS, ETC. (FOR PIPES 48" & UNDER)

NOTE: ELEVATIONS ARE FOR INFORMATIONAL PURPOSES ONLY.

STATION	LOCATION (L.T., RT., OR CL)*	STRUCTURE NO. FROM	STRUCTURE NO. TO	TOP ELEVATION	INVERT ELEVATION	INVERT ELEVATION	SLOPE CRITICAL	CLASS III R.C. PIPE (UNLESS NOTED OTHERWISE) 12"	15"	18"	24"	30"	36"	42"	48"	BITUMINOUS COATED C.S. PIPE TYPE B (UNLESS NOTED OTHERWISE) 12"	15"	16"	24"	30"	36"	42"	48"	15" SIDE DRAIN PIPE	18" SIDE DRAIN PIPE	24" SIDE DRAIN PIPE	ENDWALLS STD. 838.01 OR STD. 838.11 (UNLESS NOTED OTHERWISE) CU. YARDS R.C.P.	C.S.P.	QUANTITIES FOR DRAINAGE STRUCTURES PER EACH (0' THRU 5.0')	*TOTAL L.F. FOR PAY QUANTITY SHALL BE COL. 'A' + (1.3 X COL. 'B') LIN. FT. A: 5.0' THRU 10.0'	B: 10.0' AND ABOVE	C.B. STD. 840.01 OR STD. 840.02	FRAME, GRATES, AND HOOD STANDARD 840.03 TYPE OF GRATE E	F	G	M.D.I. (N.S.) FRAME WITH TWO FLAT GRATES STD. 840.29	T.B. D.I. STD. 840.35	CORR. STEEL ELBOWS NO. & SIZE	CONC. COLLARS CL. "B" C.Y. STD. 840.72	CONC. & BRICK PIPE PLUG, C.Y. STD. 840.71	PIPE REMOVAL LIN. FT.	REMARKS
SIZE																																													
THICKNESS OR GAUGE																.064	.064	.064	.064	.079	.079	.109	.109																						
13+05.53	LT	1		1647.92																									1							1	1							
	LT	1	2		1645.17	1644.50			20																																			
13+26.61	LT	2		1648.02																									1							1	1							
	LT	2	4		1644.40	1641.00												20																				2@18"						
	CL	2	3		1644.40	1647.50				40																																		
11+67+/-	RT	5																						28																				
SHEET TOTALS								20	40									20						28					2						2	2		2@18"					

ABBREVIATIONS	
C.B.	CATCH BASIN
N.D.I.	NARROW DROP INLET
D.I.	DROP INLET
M.D.I.	MEDIAN DROP INLET
M.D.I.(N.S.)	MEDIAN DROP INLET (NARROW SLOT)
J.B.	JUNCTION BOX
M.H.	MANHOLE
T.B.D.I.	TRAFFIC BEARING DROP INLET
T.B.J.B.	TRAFFIC BEARING JUNCTION BOX

PROJECT REFERENCE NO.	SHEET NO.
B-5234	4
R/W SHEET NO.	

ROADWAY DESIGN ENGINEER: NORTH CAROLINA PROFESSIONAL SEAL 35018 ENGINEER JIMMY L. TERRY JR. 02/25/10

HYDRAULICS ENGINEER: NORTH CAROLINA PROFESSIONAL SEAL 12300 ENGINEER CHARLES LEE FLOWE 6/11/2010

TGS ENGINEERS
TGS ENGINEERS
SUITE 141
975 WALNUT STREET
CARY, NC 27511
PH (919) 319-8850

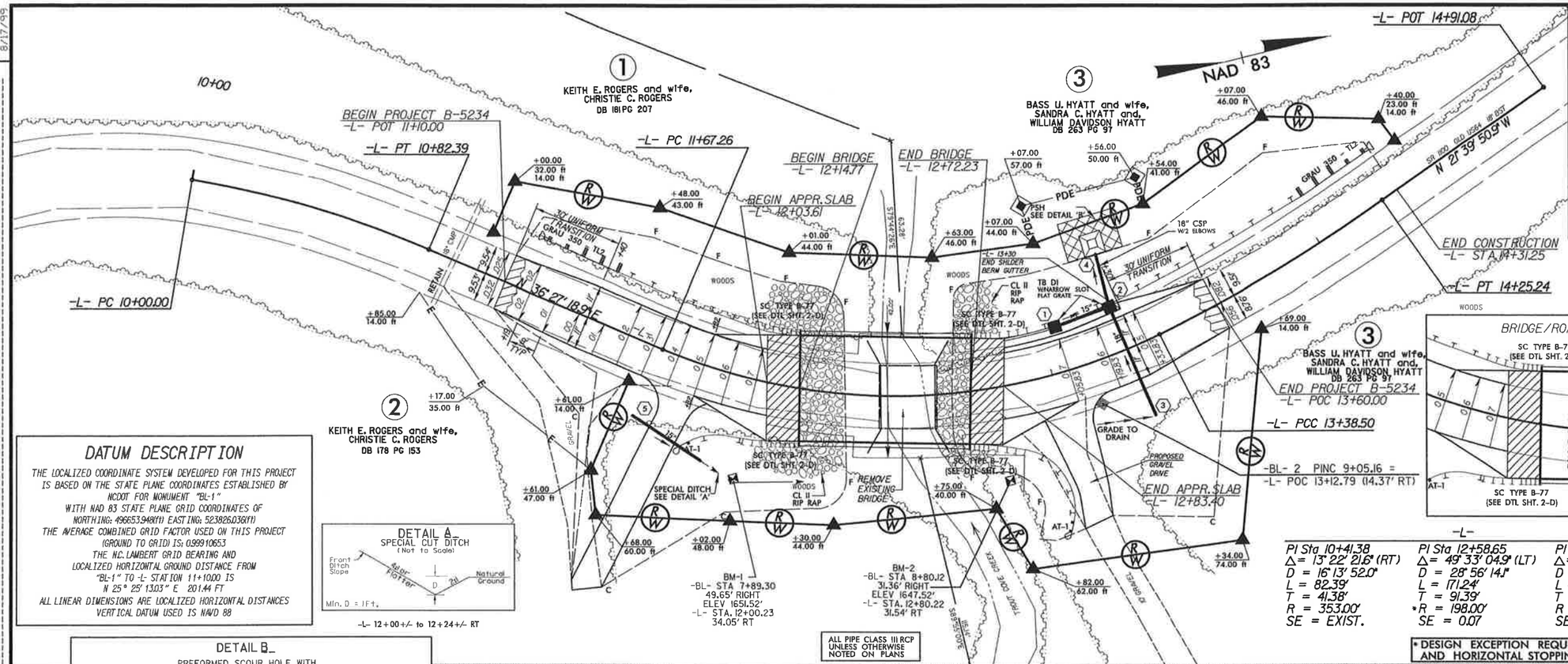

SEE SHEETS S-1 THRU S-15 FOR STRUCTURE PLANS

BRIDGE/ROADWAY RELATIONSHIP SKETCH

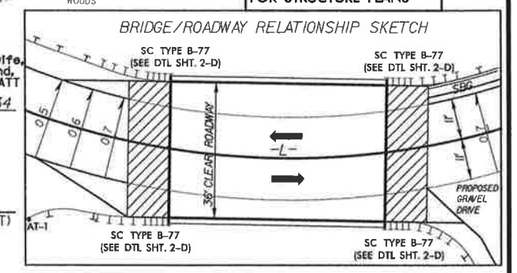

DATUM DESCRIPTION

THE LOCALIZED COORDINATE SYSTEM DEVELOPED FOR THIS PROJECT IS BASED ON THE STATE PLANE COORDINATES ESTABLISHED BY NCDOT FOR MONUMENT "BL-1"
WITH NAD 83 STATE PLANE GRID COORDINATES OF
NORTHING: 496653.948(ft) EASTING: 523826.036(ft)
THE AVERAGE COMBINED GRID FACTOR USED ON THIS PROJECT (GROUND TO GRID) IS: 0.99910653
THE N.C. LAMBERT GRID BEARING AND LOCALIZED HORIZONTAL GROUND DISTANCE FROM "BL-1" TO -L- STATION 11+10.00 IS
N 25° 25' 13.03" E 201.44 FT
ALL LINEAR DIMENSIONS ARE LOCALIZED HORIZONTAL DISTANCES
VERTICAL DATUM USED IS NAVD 88

DETAIL A
SPECIAL CUT DITCH
(Not to Scale)

-L- 12+00+/- to 12+24+/- RT

PI Sta 10+41.38	PI Sta 12+58.65	PI Sta 13+81.95
Δ = 13° 22' 21.6" (RT)	Δ = 49° 33' 04.9" (LT)	Δ = 8° 34' 04.9" (LT)
D = 16° 13' 52.0"	D = 28° 56' 14.1"	D = 9° 52' 42.9"
L = 82.39'	L = 171.24'	L = 86.73'
T = 41.38'	T = 91.39'	T = 43.45'
R = 353.00'	*R = 198.00'	R = 580.00'
SE = EXIST.	SE = 0.07	SE = EXIST.

*DESIGN EXCEPTION REQUIRED FOR HORIZONTAL CURVATURE AND HORIZONTAL STOPPING SIGHT DISTANCE

DETAIL B
PREFORMED SCOUR HOLE WITH LEVEL SPREADER APRON

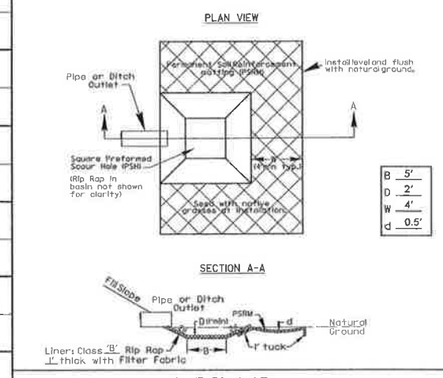

-L- 13+30+/- LT
PSRM: EST. 34 SY
CL 'B' RIP RAP: EST. 10 TONS
FILTER FABRIC: EST. 26 SY

BM-1 ELEV. = 1,651.52
-L- STA. 12+00.23 34.05' RT
RR SPIKE IN 18" TRIPLE POPLAR

BM-2 ELEV. = 1,647.79
-L- STA. 12+80.22 31.54' RT
RR SPIKE IN 10" POPLAR

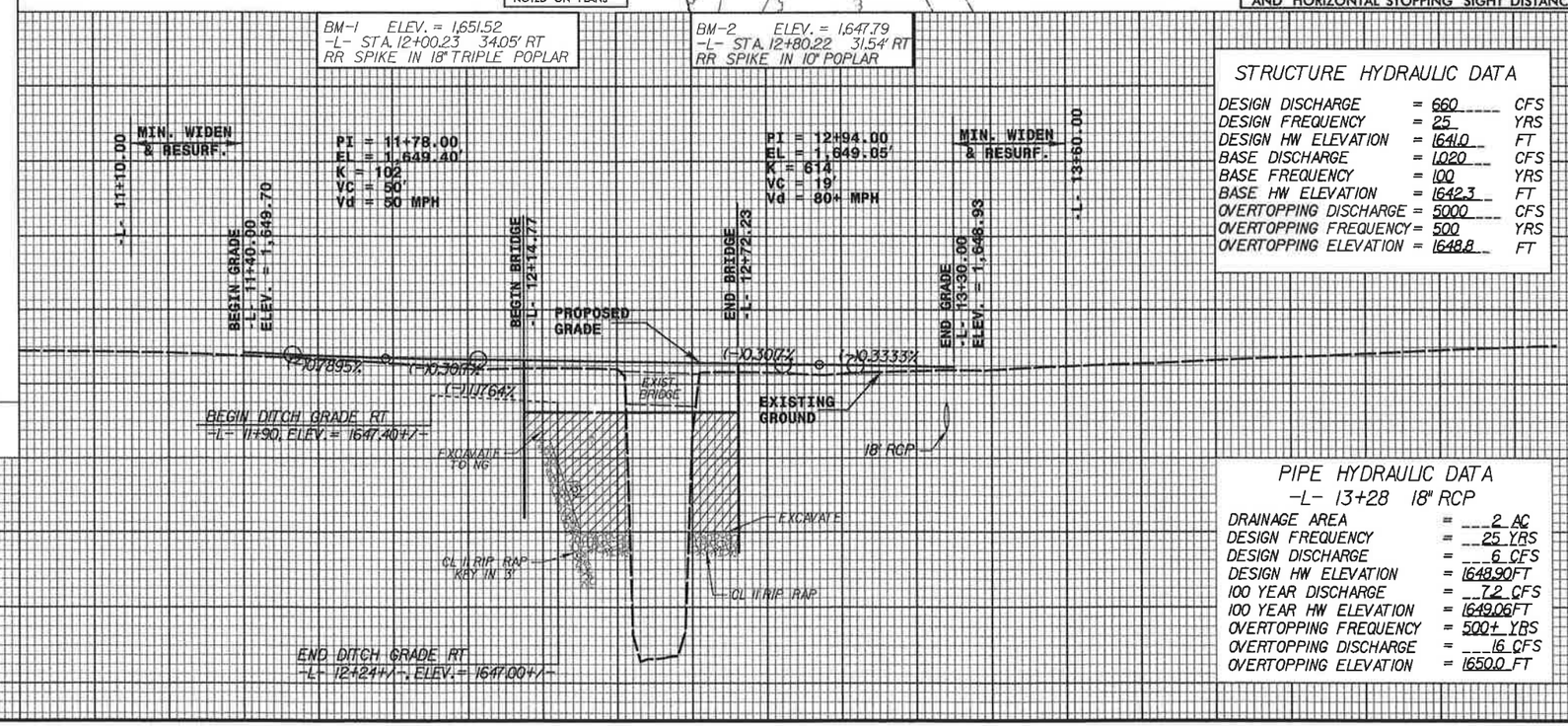

STRUCTURE HYDRAULIC DATA

DESIGN DISCHARGE	= 660	CFS
DESIGN FREQUENCY	= 25	YRS
DESIGN HW ELEVATION	= 1641.0	FT
BASE DISCHARGE	= 1,020	CFS
BASE FREQUENCY	= 100	YRS
BASE HW ELEVATION	= 1642.3	FT
OVERTOPPING DISCHARGE	= 5000	CFS
OVERTOPPING FREQUENCY	= 500	YRS
OVERTOPPING ELEVATION	= 1648.8	FT

PIPE HYDRAULIC DATA
-L- 13+28 18" RCP

DRAINAGE AREA	= 2	AC
DESIGN FREQUENCY	= 25	YRS
DESIGN DISCHARGE	= 6	CFS
DESIGN HW ELEVATION	= 1648.90	FT
100 YEAR DISCHARGE	= 7.2	CFS
100 YEAR HW ELEVATION	= 1649.06	FT
OVERTOPPING FREQUENCY	= 500+	YRS
OVERTOPPING DISCHARGE	= 16	CFS
OVERTOPPING ELEVATION	= 1650.0	FT

REVISIONS

8/17/99

2/22/2010
R:\SAA\14024B\Roadway\Proj\MA140248_RDY_PSH.dgn
11:28:31 AM

B-5234

CONTRACT: DO00057

STATE OF NORTH CAROLINA
DIVISION OF HIGHWAYS

STATE TIP PROJECT REFERENCE NO.	SHEET NO.
B-5234	TCP-1

PLAN FOR PROPOSED TRAFFIC CONTROL, MARKING & DELINEATION

CLAY COUNTY

ROADWAY STANDARD DRAWINGS

THE FOLLOWING ROADWAY STANDARDS AS APPEAR IN "ROADWAY STANDARD DRAWINGS"-ROADWAY DESIGN UNIT-N.C. DEPARTMENT OF TRANSPORTATION-RALEIGH, N.C., DATED JANUARY 2002 ARE APPLICABLE TO THIS PROJECT AND BY REFERENCE HEREBY ARE CONSIDERED A PART OF THESE PLANS:

STD. NO.	TITLE
1101.03	TEMPORARY ROAD CLOSURES
1101.11	TRAFFIC CONTROL DESIGN TABLES
1110.01	STATIONARY WORK ZONE SIGNS
1130.01	DRUMS
1135.01	CONES
1145.01	BARRICADES
1170.01	PORTABLE CONCRETE BARRIER
1205.01	PAVEMENT MARKINGS - LINE TYPES & OFFSETS
1205.02	PAVEMENT MARKINGS - 2 LANE & MULTILANE ROADWAYS
1205.12	PAVEMENT MARKINGS - BRIDGES
1250.01	PAVEMENT MARKER SPACING
1251.01	RAISED PAVEMENT MARKERS - (PERMANENT AND TEMPORARY)
1261.01	GUARDRAIL & BARRIER DELINEATOR SPACING
1261.02	GUARDRAIL & BARRIER DELINEATOR TYPES
1262.01	GUARDRAIL END DELINEATION

INDEX OF SHEETS

SHEET NO.	TITLE
TCP-1	LIST OF APPLICABLE ROADWAY STANDARD DRAWINGS, LEGEND, & INDEX OF SHEETS
TCP-2	PROJECT NOTES
TCP-3	OVERVIEW & TRAFFIC CONTROL PHASING
TCP-4	DETOUR
TCP-5	DETOUR SIGN LAYOUT
PM-1	FINAL PAVEMENT MARKING SCHEDULE & PAVEMENT MARKING PLAN

LEGEND

GENERAL

- DIRECTION OF TRAFFIC FLOW
- NORTH ARROW
- PROPOSED PVMT. — EXIST. PVMT.
- WORK AREA
- REMOVAL OF EXISTING PAVEMENT

TRAFFIC CONTROL DEVICES

- TYPE I BARRICADE
- TYPE II BARRICADE
- TYPE III BARRICADE
- CONE
- DRUM
- FLASHING ARROW PANEL (TYPE C)
- TYPE 'B' WARNING LIGHT
- STATIONARY SIGN
- PORTABLE SIGN
- STATIONARY OR PORTABLE SIGN
- WARNING FLAGS
- CRASH CUSHION
- CHANGEABLE MESSAGE SIGN
- TRUCK MOUNTED IMPACT ATTENUATOR (TMIA)
- POLICE
- FLAGGER

PAVEMENT MARKINGS

- CRYSTAL/CRYSTAL PAVEMENT MARKER
- YELLOW/YELLOW PAVEMENT MARKER
- CRYSTAL/RED PAVEMENT MARKER
- PAVEMENT MARKING SYMBOLS

APPROVED: _____
DATE: _____

SEAL

NORTH CAROLINA PROFESSIONAL SEAL 35018 ENGINEER TIMMY L. TERRY JR.
5/11/10

PLAN PREPARED FOR N.C.D.O.T. BY:

TGS ENGINEERS
TGS ENGINEERS
SUITE 141
975 WALNUT STREET
CARY, NC 27511
PH (919) 319-8850

C. L. FLOWE, PE — PROJECT ENGINEER
W. C. PARKER, PE — DESIGN ENGINEER
_____ DESIGN TECHNICIAN

5/11/2010
R:\MAI4004B\TrafficControl\TCP\MAI4004B_tcp_tsh.dgn
9:44:42 AM

STATE TIP PROJECT NO.	SHEET NO.
B-5234	TCP-2

PROJECT NOTES

GENERAL NOTES

CHANGES MAY BE REQUIRED WHEN PHYSICAL DIMENSIONS IN THE DETAIL DRAWINGS, STANDARD DETAILS, AND ROADWAY DETAILS ARE NOT ATTAINABLE TO MEET FIELD CONDITIONS OR RESULT IN DUPLICATE OR UNDESIRED OVERLAPPING OF DEVICES. MODIFICATION MAY INCLUDE: MOVING, SUPPLEMENTING, COVERING, OR REMOVAL OF DEVICES AS DIRECTED BY THE ENGINEER.

THE FOLLOWING GENERAL NOTES APPLY AT ALL TIMES FOR THE DURATION OF THE CONSTRUCTION PROJECT EXCEPT WHEN OTHERWISE NOTED IN THE PLAN OR DIRECTED BY THE ENGINEER.

TRAFFIC PATTERN ALTERATIONS

A) NOTIFY THE ENGINEER TWENTY ONE (21) CALENDAR DAYS PRIOR TO ANY TRAFFIC PATTERN ALTERATION.

SIGNING

B) INSTALL ADVANCE WORK ZONE WARNING SIGNS WHEN WORK IS WITHIN 40 FT FROM THE EDGE OF TRAVEL LANE AND NO MORE THAN THREE (3) DAYS PRIOR TO THE BEGINNING OF CONSTRUCTION.

C) PROVIDE PERMANENT SIGNING.

D) PROVIDE SIGNING AND DEVICES REQUIRED TO CLOSE THE ROAD ACCORDING TO THE ROADWAY STANDARD DRAWINGS AND TRAFFIC CONTROL PLANS.

SIGNING REQUIRED FOR THE OFF-SITE DETOUR ROUTE AS SHOWN IN THE TRAFFIC CONTROL PLANS.

E) COVER OR REMOVE ALL SIGNS AND DEVICES REQUIRED TO CLOSE THE ROAD WHEN ROAD CLOSURE IS NOT IN OPERATION.

COVER OR REMOVE ALL SIGNS REQUIRED FOR THE OFF-SITE DETOUR WHEN THE DETOUR IS NOT IN OPERATION.

F) ENSURE ALL NECESSARY SIGNING IS IN PLACE PRIOR TO ALTERING ANY TRAFFIC PATTERN.

TRAFFIC BARRIER

G) INSTALL TEMPORARY BARRIER ACCORDING TO THE TRAFFIC CONTROL PLANS A MAXIMUM OF TWO (2) WEEKS PRIOR TO BEGINNING WORK IN ANY LOCATION. ONCE TEMPORARY BARRIER IS INSTALLED AT ANY LOCATION PROCEED IN A CONTINUOUS MANNER TO COMPLETE THE PROPOSED WORK IN THAT LOCATION UNLESS OTHERWISE STATED IN THE TRAFFIC CONTROL PLANS OR AS DIRECTED BY THE ENGINEER.

DO NOT PLACE BARRIER DIRECTLY ON ANY SURFACE OTHER THAN ASPHALT OR CONCRETE.

ONCE TEMPORARY BARRIER IS INSTALLED AT ANY LOCATION AND NO WORK IS PERFORMED BEHIND THE TEMPORARY BARRIER FOR A PERIOD LONGER THAN TWO (2) MONTHS, REMOVE/RESET TEMPORARY BARRIER AT NO COST TO THE DEPARTMENT UNLESS OTHERWISE STATED IN THE TRAFFIC CONTROL PLANS, TEMPORARY BARRIER IS PROTECTING A HAZARD, OR AS DIRECTED BY THE ENGINEER.

INSTALL TEMPORARY BARRIER WITH THE TRAFFIC FLOW BEGINNING WITH THE UPSTREAM SIDE OF TRAFFIC. REMOVE TEMPORARY BARRIER AGAINST THE TRAFFIC FLOW BEGINNING WITH THE DOWNSTREAM SIDE OF TRAFFIC.

INSTALL AND SPACE DRUMS NO GREATER THAN TWICE THE POSTED SPEED LIMIT (MPH) TO CLOSE OR KEEP THE SECTION OF THE ROADWAY CLOSED UNTIL THE TEMPORARY BARRIER CAN BE PLACED OR AFTER THE TEMPORARY BARRIER IS REMOVED.

TRAFFIC CONTROL DEVICES

H) PLACE TYPE III BARRICADES, WITH "ROAD CLOSED" SIGN R11-2 ATTACHED, OF SUFFICIENT LENGTH TO CLOSE ENTIRE ROADWAY.

PAVEMENT MARKINGS AND MARKERS

I) INSTALL PAVEMENT MARKINGS AND PAVEMENT MARKERS ON THE FINAL SURFACE AS SHOWN IN THE PAVEMENT MARKING PLAN.

J) TIE PROPOSED PAVEMENT MARKING LINES TO EXISTING PAVEMENT MARKING LINES.

LOCAL NOTES

THE FOLLOWING LOCAL NOTES APPLY ONLY AT THE TIMES THEY ARE REFERENCED IN THE PLAN.

1) MAINTAIN ACCESS TO DRIVEWAYS AT ALL TIMES USING INCIDENTAL STONE.

PLANS PREPARED BY:

TGS ENGINEERS
SUITE 141
975 WALNUT STREET
CARY, NC 27511
PH (919) 319-8850

APPROVED: _____ DATE: _____

SEAL

NORTH CAROLINA PROFESSIONAL SEAL 35018 ENGINEER JIMMY L. TERRY JR.

3/24/10

PROJECT NOTES

SCALE:	NONE
DATE:	NOV., 2009
DWG. BY:	JLT
DESIGN BY:	JLT
REVIEWED BY:	WCP

REVISIONS

CADD FILE

$$$$$SYSTIME$$$$
$$$$$$$$$$$$$$$$DGN$ $$$$$$$$$$$$
$$$$$USERNAME$$$$

STATE TIP PROJECT NO.	SHEET NO.
B-5234	TCP-3

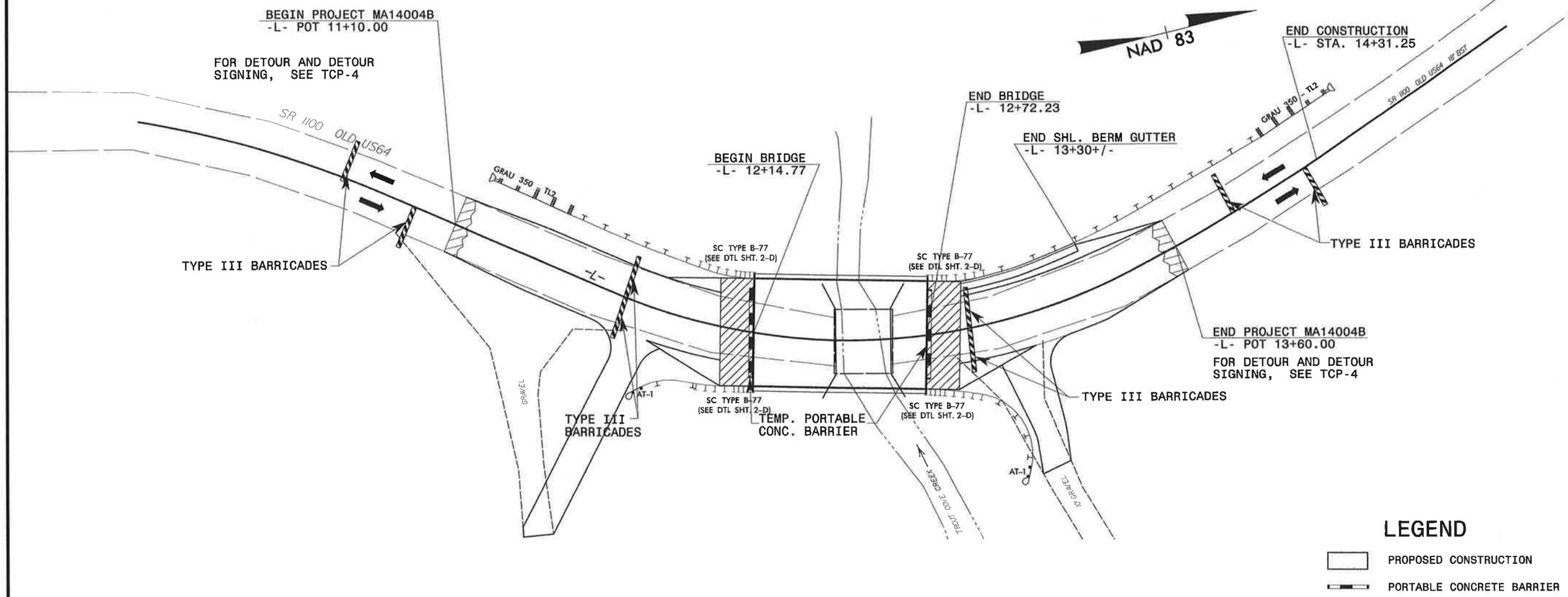

LEGEND

- PROPOSED CONSTRUCTION
- PORTABLE CONCRETE BARRIER

PHASE I

STEP 1: INSTALL ALL WORKZONE WARNING SIGNS AND DEVICES AS SHOWN ON ROADWAY STANDARD DRAWING 1101.03 (SHEET 1 OF 9). INSTALL AND COVER ALL DETOUR ROUTE SIGNS AS SHOWN ON SHEET TCP-4.

STEP 2: UNCOVER DETOUR SIGNS AND CLOSE SR 1100 (-L-) TO TRAFFIC AS SHOWN IN ROADWAY STANDARD DRAWING 1101.03 (SHEET 1 OF 9) AND ON SHEET TCP-4.

STEP 3: DEMOLISH AND REMOVE EXISTING BRIDGE AND PROCEED TO CONSTRUCT SR 1100 (-L-) AND BRIDGE FROM STA. 11+10+/- TO STA. 13+60+/-. TRAFFIC ACCESS MUST BE MAINTAINED TO LOCAL DRIVEWAYS AT ALL TIMES DURING CONSTRUCTION.

STEP 4: PLACE PERMANENT PAVEMENT MARKINGS AND PERMANENT RAISED REFLECTIVE PAVEMENT MARKERS ON SR 1100 (-L-) FROM STA. 11+10+/- TO STA. 13+60+/- (REFER TO SHEET PM-1).

PLACE PROPOSED GUARDRAIL AS SHOWN ON THE ROADWAY PLANS AND SHEET TCP-3.

STEP 5: REMOVE WORKZONE WARNING SIGNS, BARRICADES, AND DETOUR SIGNS AND OPEN SR 1100 (-L-) TO TRAFFIC IN FINAL PATTERNS.

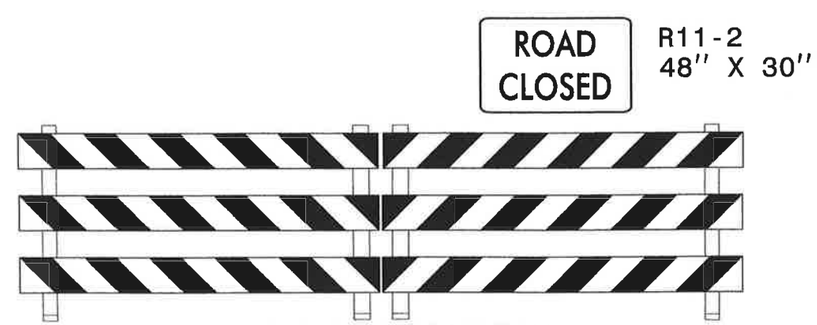

TYPE III BARRICADE(S)

PLANS PREPARED BY:

TGS ENGINEERS
SUITE 141
975 WALNUT STREET
CARY, NC 27511
PH (919) 319-8850

APPROVED:_____ DATE:_____

SEAL

NORTH CAROLINA PROFESSIONAL SEAL ENGINEER SEAL 35018 JIMMY L. TERRY JR.
02/23/10

OVERVIEW & PHASING

SCALE:	NONE
DATE:	NOV., 2009
DWG. BY:	JLT
DESIGN BY:	JLT
REVIEWED BY:	WCP

REVISIONS

CADD FILE

2/22/2010
R:\MA14004B\TrafficControl\TCP\MA14004B_tcp_phasing.dgn
12:02:12 PM

STATE TIP PROJECT NO.	SHEET NO.
B-5234	TCP-4

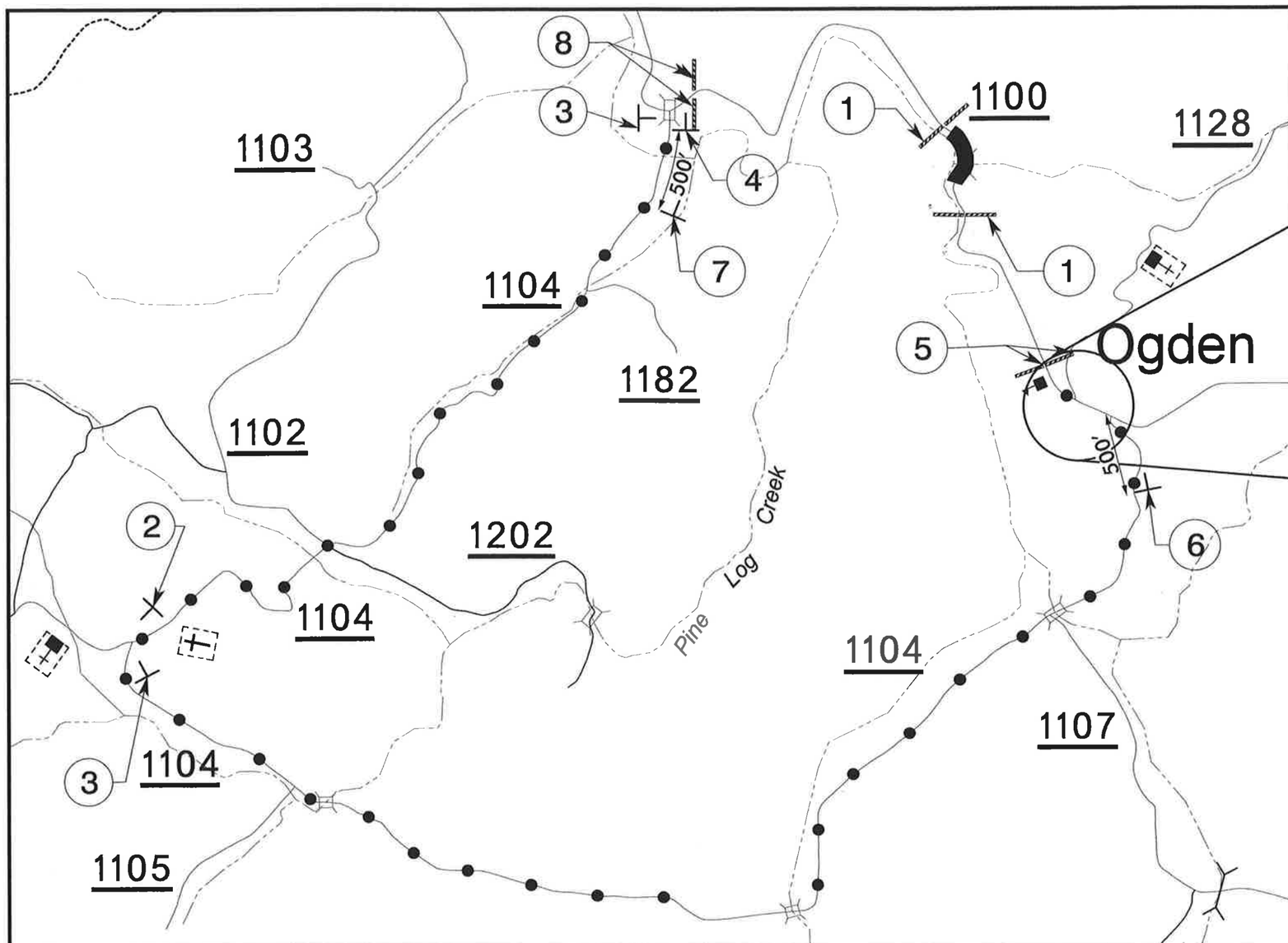

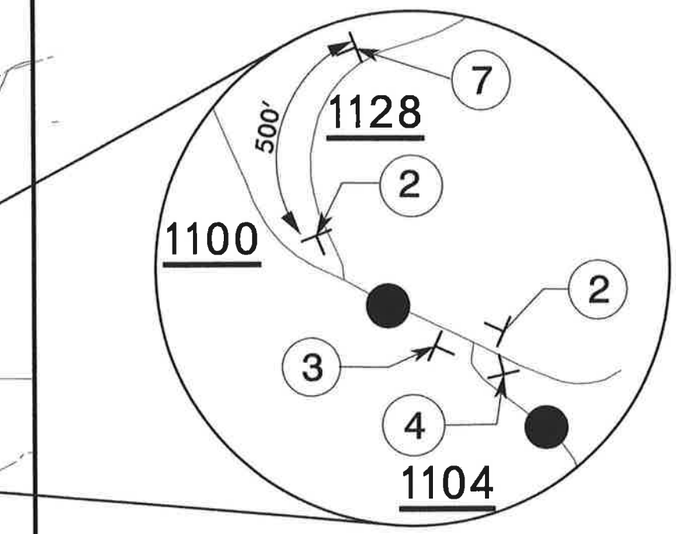

4

SR 1100 ***

END DETOUR M4-8 A 24" X 18"

5

ROAD CLOSED TO THRU TRAFFIC R11-4 60"X30"

TYPE III BARRICADE

6

ROAD CLOSED W20-3 48" X 48"

NEXT LEFT SP-4 42" X 12"

7

ROAD CLOSED W20-3 48" X 48"

NEXT RIGHT SP-4 42" X 12"

8

ROAD CLOSED R11-3 60"X30"
XX MILES AHEAD
LOCAL TRAFFIC ONLY

TYPE III BARRICADE

LEGEND

CONSTRUCTION AREA

DETOUR ROUTE

*** SEE SHEET TCP-5 FOR SIGN DESIGN

1

ROAD CLOSED R11-2 48" X 30"

TYPE III BARRICADE(S)

2

SR 1100 ***

DETOUR M4-8 24" X 12"

M6-1 21" X 15"

3

SR 1100 ***

DETOUR M4-8 24" X 12"

M6-1 21" X 15"

PLANS PREPARED BY:

TGS ENGINEERS
TGS ENGINEERS
SUITE 141
975 WALNUT STREET
CARY, NC 27511
PH (919) 319-8850

APPROVED: _____ DATE: _____

SEAL

NORTH CAROLINA PROFESSIONAL SEAL 35018 ENGINEER JIMMY L. TERRY, JR.

03/29/10

DETOUR

SCALE:	NONE
DATE:	NOV., 2009
DWG. BY:	JLT
DESIGN BY:	JLT
REVIEWED BY:	WCP

REVISIONS

CADD FILE

2/22/2010
R:\MAI4004B\TrafficControl\TCP\MAI4004B_tcp_DETOUR.dgn
12:03:30 PM

STATE TIP PROJECT NO.	SHEET NO.
B-5234	TCP-5

SIGN NUMR: DET-1 TSv3.31 DESIGN BY: JLT CK BY:_____ STD #: 0 VERTICAL
TYPE: D BACKG ORANGE PROJECT ID:B-5234 DIV:14 DATE: 11/09/09 SPACING

SIGN WIDTH: 36 INCHES MAJ. COPY SERIES: C
HEIGHT: 18 INCHES
TOTALAREA :(S.F.) 4.50 ROUTE MARKERS:

BORDR TYPE:RECESSED
RECESS 0.38 INCHES
WIDTH: 0.63 INCHES ARROW TYPES:
RADII: 1.50 INCHES

NO. Z BARS: #N/A VHB:
LENGTH: #N/A INCHES MAT'L:0.080 " ALUMINUM

USE NO 1,4

1. Legend and border shall be direct applied non-reflective sheeting.
2. Legend and border shall be direct applied non-reflective sheeting.
3. Shields shall be encapsulated lens reflective sheeting on .032" aluminum and demountable.
4. Background shall be type VII, VIII, or IX flourescent orange reflective sheeting.
5. Background shall be enclosed lens refl. sheeting.
6. Center arrow(s) vertically on sign.

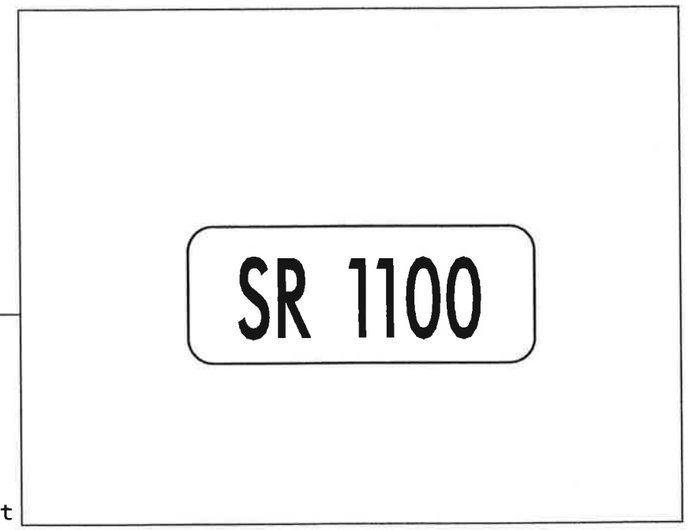

MOUNTED ON 1 U POST

6.50	SPACE
5.00	LINE 1
C	11.5
6.50	SPACE
0.00	
0.00	
0.00	
0.00	
0.00	
0.00	
0.00	
0.00	
TOTAL: 18	0.00

SIZE/SERIES	LT MARGIN	SIGN COPY														RT MARGIN
CHAR: 5.00 INCH		S	R		1	1	0	0								
TYPE:C	7.31	3.79	2.74	4.10	2.07	2.07	3.74	2.89	0.00	0.00	0.00	0.00	0.00	0.00	0.00	
#/LC: 5.00 INCH	[x]	7.3	11.1	13.8	17.9	20.0	22.1	25.8	28.7	0.0	0.0	0.0	0.0	0.0	0.0	
SPCE: 1.00 FACTOR																
LINE 1		0.00	0.00	0.00	0.00	0.00	0.00	0.00	0.00	0.00	0.00	0.00	0.00	0.00	0.00	7.31
		0.0	0.0	0.0	0.0	0.0	0.0	0.0	0.0	0.0	0.0	0.0	0.0	0.0	0.0	0.0

APPROVED:_____ DATE:_____

SEAL

NORTH CAROLINA PROFESSIONAL ENGINEER SEAL 35018 JIMMY L TERRY JR.

02/23/10

DETOUR SIGN LAYOUT

SCALE:	NONE
DATE:	NOV., 2009
DWG. BY:	SGM
DESIGN BY:	JLT
REVIEWED BY:	WCP

REVISIONS

CADD FILE

2/22/2010
G:\MAI4004B\TrafficControl\TCP\MAI4004B_tcp_DET_Sign.dgn
12:02:52 PM

STATE TIP PROJECT NO.	SHEET NO.
B-5234	PM-1

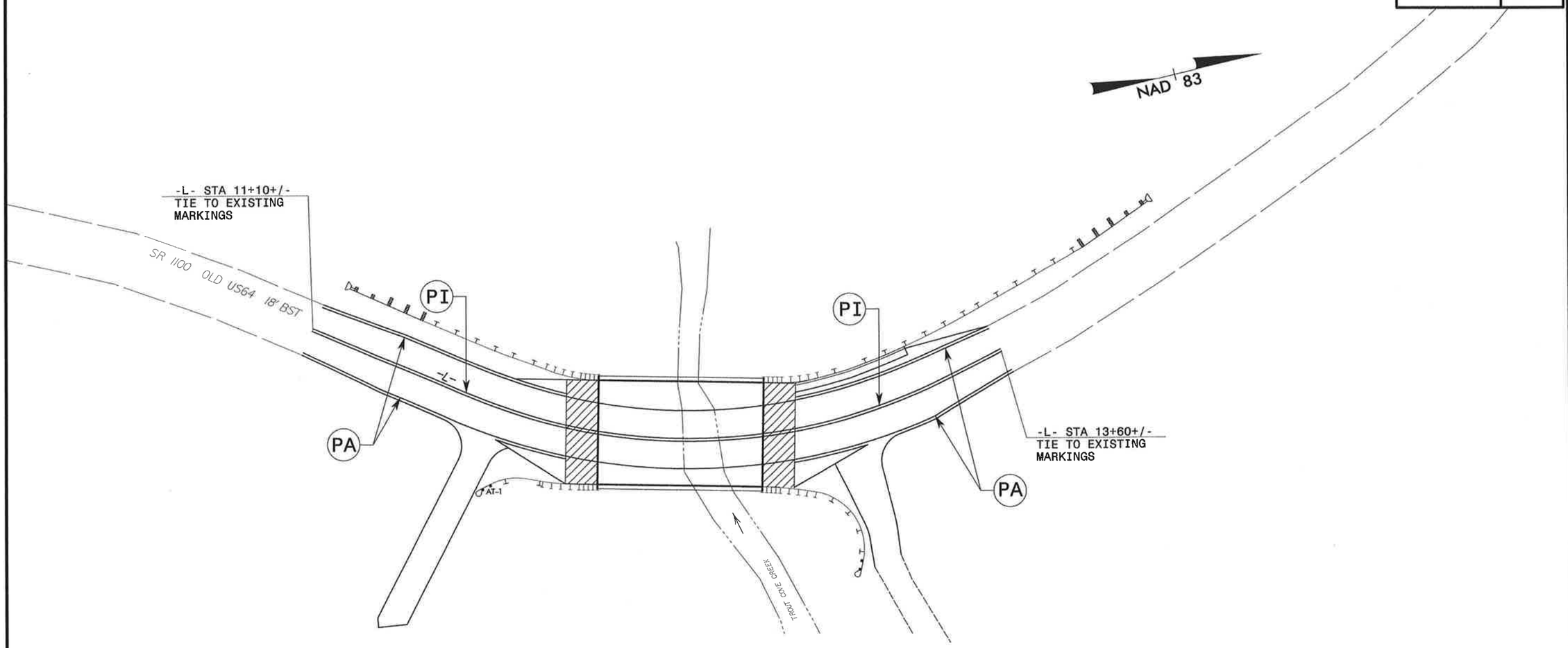

FINAL PAVEMENT MARKING SCHEDULE

SYMBOL	DESCRIPTION	PAY ITEM	QUANTITY BREAKDOWN	TOTAL QUANTITY
		PAVEMENT MARKINGS LINES		
		PAINT (4")		
PA	WHITE EDGELINE (2X)		1,000 LF	
PI	YELLOW DOUBLE CENTER (2X)		1,000 LF	
			TOTAL	2,000 LF
		PAVEMENT MARKERS		
MA	YELLOW & YELLOW	PERMANENT RAISED PAVEMENT	8 EA	
			TOTAL	8 EA

NOTE: FOR EACH PAINT PAVEMENT MARKING ITEM, 1X IMPLIES A SINGLE APPLICATION, 2X IMPLIES TWO APPLICATIONS, AND 3X IMPLIES THREE APPLICATIONS.

PLANS PREPARED BY:
TGS ENGINEERS
TGS ENGINEERS
SUITE 141
975 WALNUT STREET
CARY, NC 27511
PH (919) 319-8850

APPROVED:_____ DATE:_____

SEAL

NORTH CAROLINA PROFESSIONAL SEAL 35018 ENGINEER JIMMY L. TERRY JR.
02/23/10

FINAL PAVEMENT MARKINGS & SCHEDULE

SCALE:	NONE
DATE:	NOV., 2009
DWG. BY:	JLT
DESIGN BY:	JLT
REVIEWED BY:	WCP

REVISIONS

CADD FILE

2/22/2010
R:\MA4004B\TrafficControl\TCP\MA4004B-tcp_pml.dgn
12:04:13 PM

TIP PROJECT: B-5234

STATE	STATE PROJECT REFERENCE NO.	SHEET NO.	TOTAL SHEETS
N.C.	B-5234	EC-1	

STATE PROJ. NO.	F.A. PROJ. NO.	DESCRIPTION

STATE OF NORTH CAROLINA
DIVISION OF HIGHWAYS

PLAN FOR PROPOSED
HIGHWAY EROSION CONTROL

CLAY COUNTY

LOCATION: BRIDGE NO. 100 ON SR 1100 (OLD US 64) OVER TROUT COVE CREEK
TYPE OF WORK: GRADING, DRAINAGE, PAVING, & STRUCTURE

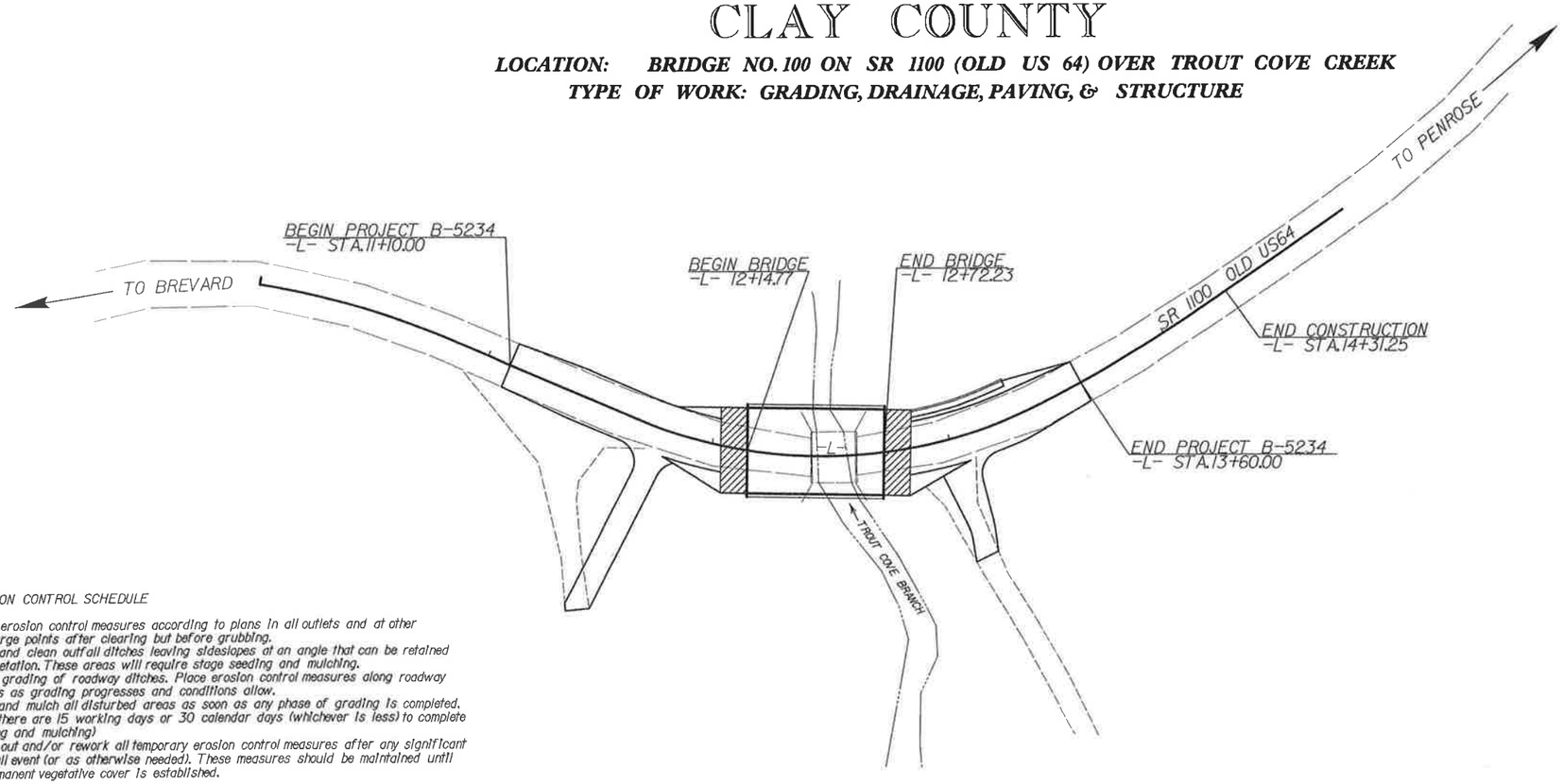

EROSION CONTROL SCHEDULE

Install erosion control measures according to plans in all outlets and at other discharge points after clearing but before grubbing.
Clear and clean outfall ditches leaving sideslopes at an angle that can be retained by vegetation. These areas will require stage seeding and mulching.
Begin grading of roadway ditches. Place erosion control measures along roadway ditches as grading progresses and conditions allow.
Seed and mulch all disturbed areas as soon as any phase of grading is completed. (Note there are 15 working days or 30 calendar days (whichever is less) to complete seeding and mulching)
Clean out and/or rework all temporary erosion control measures after any significant rainfall event (or as otherwise needed). These measures should be maintained until a permanent vegetative cover is established.

EROSION AND SEDIMENT CONTROL MEASURES

Std. #	Description	Symbol
1630.03	Temporary Silt Ditch	TSD
1630.05	Temporary Diversion	TD
1605.01	Temporary Silt Fence	
1606.01	Special Sediment Control Fence	
1622.01	Temporary Berms and Slope Drains	
	Silt Basin Type B	
1633.01	Temporary Rock Silt Check Type-A	
	Temporary Rock Silt Check Type-A with Matting and Polyacrylamide (PAM)	
	Temporary Rock Silt Check Type-B	
	Wattle	
1634.01	Temporary Rock Sediment Dam Type-A	
1634.02	Temporary Rock Sediment Dam Type-B	
1635.01	Rock Pipe Inlet Sediment Trap Type-A	
1635.02	Rock Pipe Inlet Sediment Trap Type-B	
1630.04	Stilling Basin	
1630.06	Special Stilling Basin	
	Rock Inlet Sediment Trap:	
1632.01	Type A	A
1632.02	Type B	B
1632.03	Type C	C
	Skimmer Basin	
	Tiered Skimmer Basin	
	Infiltration Basin	

THIS PROJECT CONTAINS EROSION CONTROL PLANS FOR CLEARING AND GRUBBING PHASE OF CONSTRUCTION.

GRAPHIC SCALE

10 0 20

PLANS

DESIGN DATA

ADT 2010 = 2,200
ADT 2030 = 4,644
T = 7 %
V = 45 MPH

PROJECT LENGTH

LENGTH ROADWAY PROJECT B-5234	=	.036 MI
LENGTH STRUCTURE PROJECT B-5234	=	.011 MI
TOTAL LENGTH PROJECT B-5234	=	.047 MI

Plans Prepared By:
TGS ENGINEERS
TGS ENGINEERS
SUITE 141
975 WALNUT STREET
CARY, NC 27511
PH (919) 319-8850

2006 STANDARD SPECIFICATIONS

LETTING DATE:

Plans Prepared for:
NCDOT DIVISION 14
NCDOT Contact:
RALPH CANNADY
DIVISION PROJECT MANAGER

JIMMY L. TERRY JR., PE
PROJECT DESIGN ENGINEER
LEVEL IIIA CERTIFICATION NO. 339

Roadway Standard Drawings

The following roadway english standards as appear in "Roadway Standard Drawings"– Roadway Design Unit – N. C. Department of Transportation – Raleigh, N. C., dated July 18, 2006 and the latest revison thereto are applicable to this project and by reference hereby are considered a part of these plans.

1605.01 Temporary Silt Fence
1607.01 Gravel Construction Entrance
1622.01 Temporary Berms and Slope Drains
1630.03 Temporary Silt Ditch
1632.03 Rock Inlet Sediment Trap Type C
1633.01 Temporary Rock Silt Check Type A

R:\Mapping\Roadway\Mapping\B5234_Proj_EC.dgn

PROJECT REFERENCE NO.	SHEET NO.
B-5234	EC-2

TEMPORARY ROCK SILT CHECK TYPE 'B' DETAIL

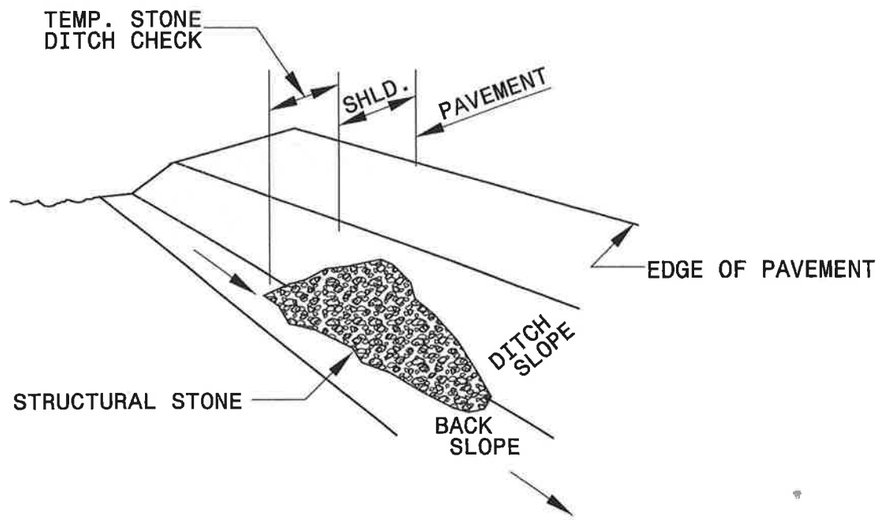

ISOMETRIC VIEW

NOTES:

USE CLASS 'B' EROSION CONTROL STONE FOR STRUCTURAL STONE.

THE ENGINEER MAY DIRECT THE OPTION OF CLASS "A" STONE FOR SITES HAVING LESS THAN ONE (1) ACRE DRAINAGE AREA AND A DITCH GRADE LESS THAN 3%.

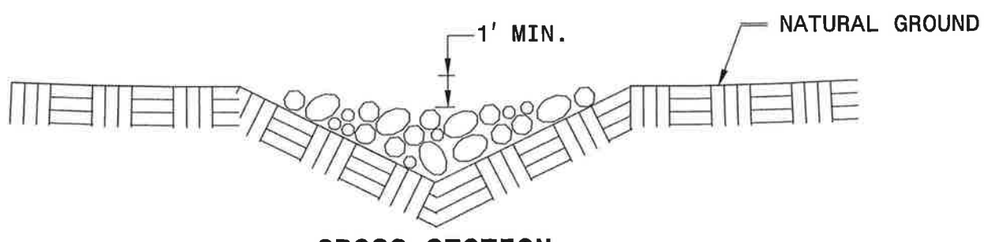

CROSS SECTION
VEE DITCH

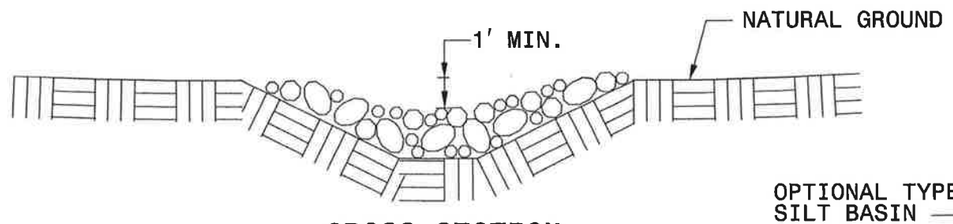

CROSS SECTION
TRAPEZOIDAL DITCH

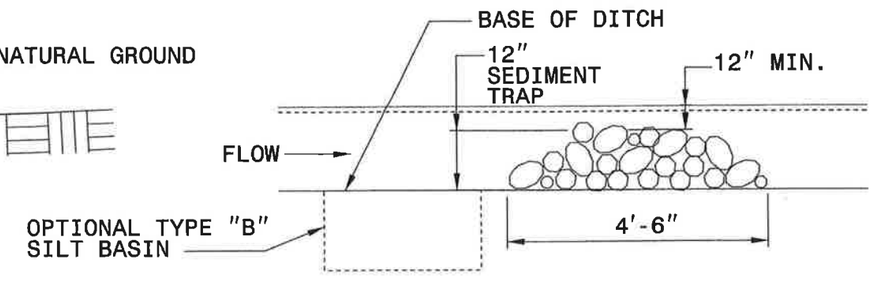

ELEVATION VIEW

PROJECT REFERENCE NO.	SHEET NO.
B-5234	EC-2A
R/W SHEET NO.	
ROADWAY DESIGN ENGINEER	HYDRAULICS ENGINEER

TEMPORARY ROCK SILT CHECK TYPE 'A' WITH EXCELSIOR MATTING AND POLYACRYLAMIDE (PAM)

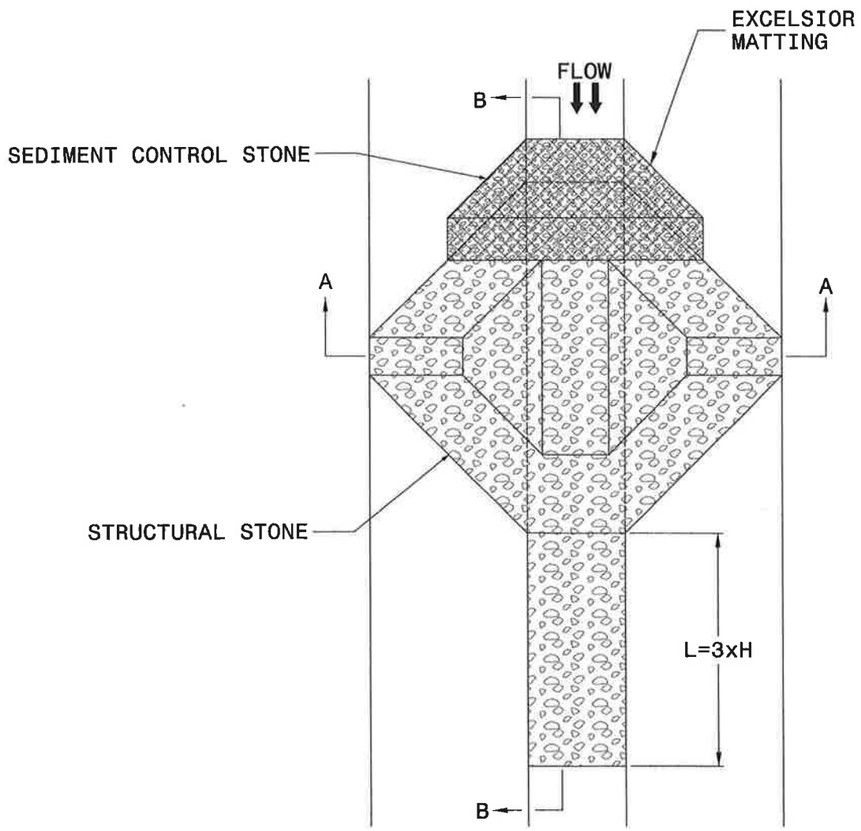

PLAN

NOTES

USE EXCELSIOR FOR MATTING MATERIAL AND ANCHOR MATTING SECTION AT TOP AND BOTTOM WITH CLASS B STONE.

PRIOR TO POLYACRYLAMIDE (PAM) APPLICATION, OBTAIN A SOIL SAMPLE FROM PROJECT LOCATION, AND FROM OFFSITE MATERIAL, AND ANALYZE FOR APPROPRIATE PAM FLOCCULANT TO BE APPLIED TO EACH ROCK SILT CHECK.

INITIALLY APPLY 3.5 OUNCES OF POLYACRYLAMIDE (PAM) TO TOP OF MATTING SECTION AND AFTER EVERY RAINFALL EVENT THAT EQUALS OR EXCEEDS 0.50 INCHES.

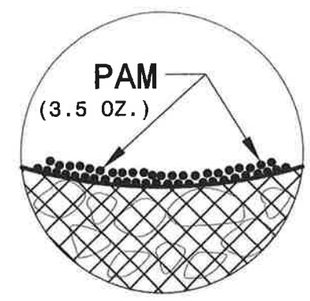

INSET A

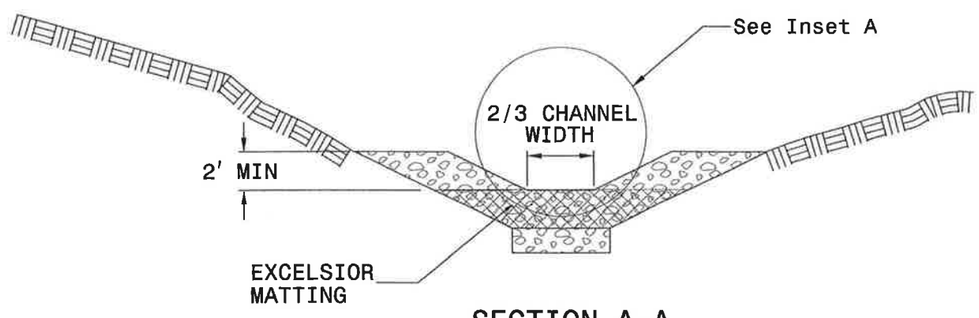

SECTION A-A

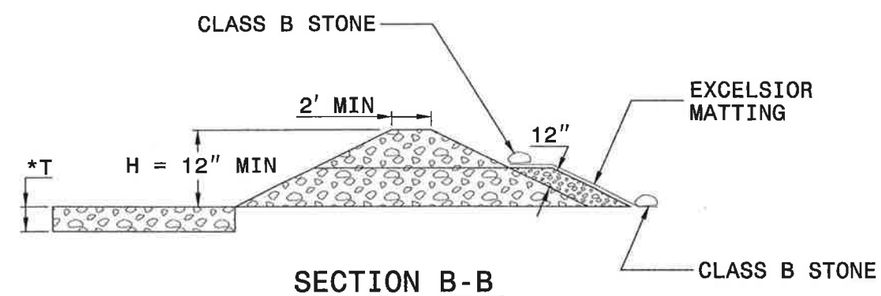

SECTION B-B

*T = 12" MIN., 18" MAX.

NOT TO SCALE

EROSION CONTROL PLAN

PROJECT REFERENCE NO.	SHEET NO.
B-5234	EC-3/CONST.4

TGS ENGINEERS
SUITE 141
975 WALNUT STREET
CARY, NC 27511
PH (919) 319-8850

CLEARING AND GRUBBING
EROSION CONTROL FOR
CONSTRUCTION SHEET 4

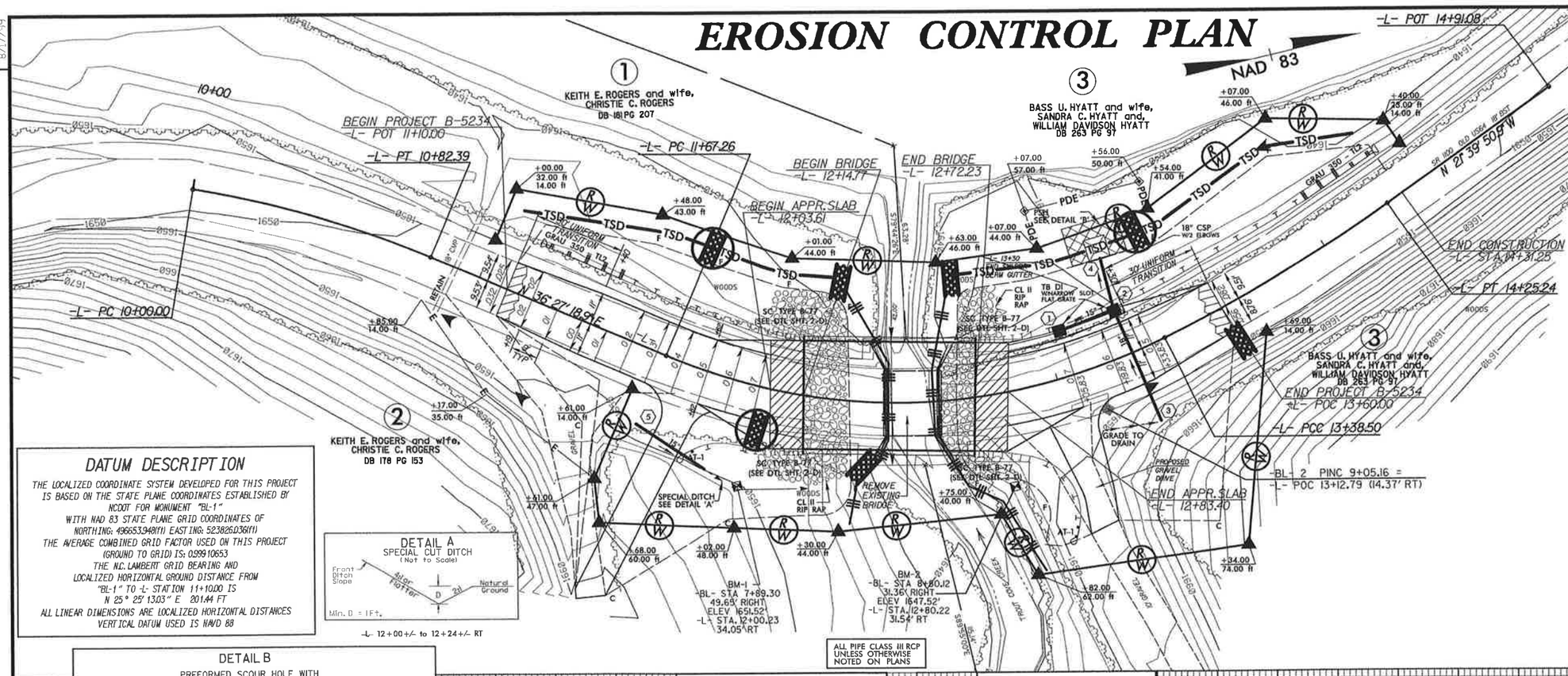

DATUM DESCRIPTION

THE LOCALIZED COORDINATE SYSTEM DEVELOPED FOR THIS PROJECT IS BASED ON THE STATE PLANE COORDINATES ESTABLISHED BY NCDOT FOR MONUMENT "BL-1"
WITH NAD 83 STATE PLANE GRID COORDINATES OF NORTHING: 496653.949(ft) EASTING: 523826.036(ft)
THE AVERAGE COMBINED GRID FACTOR USED ON THIS PROJECT (GROUND TO GRID) IS: 0.99910653
THE N.C. LAMBERT GRID BEARING AND LOCALIZED HORIZONTAL GROUND DISTANCE FROM "BL-1" TO -L- STATION 11+10.00 IS N 25° 25' 13.03" E 201.44 FT
ALL LINEAR DIMENSIONS ARE LOCALIZED HORIZONTAL DISTANCES
VERTICAL DATUM USED IS NAVD 88

DETAIL A

SPECIAL CUT DITCH
(Not to Scale)

DETAIL B

PREFORMED SCOUR HOLE WITH LEVEL SPREADER APRON

-L- 13+30+/- LT
PSRM: EST. 34 SY
CL 'B' RIP RAP: EST. 10 TONS
FILTER FABRIC: EST. 26 SY

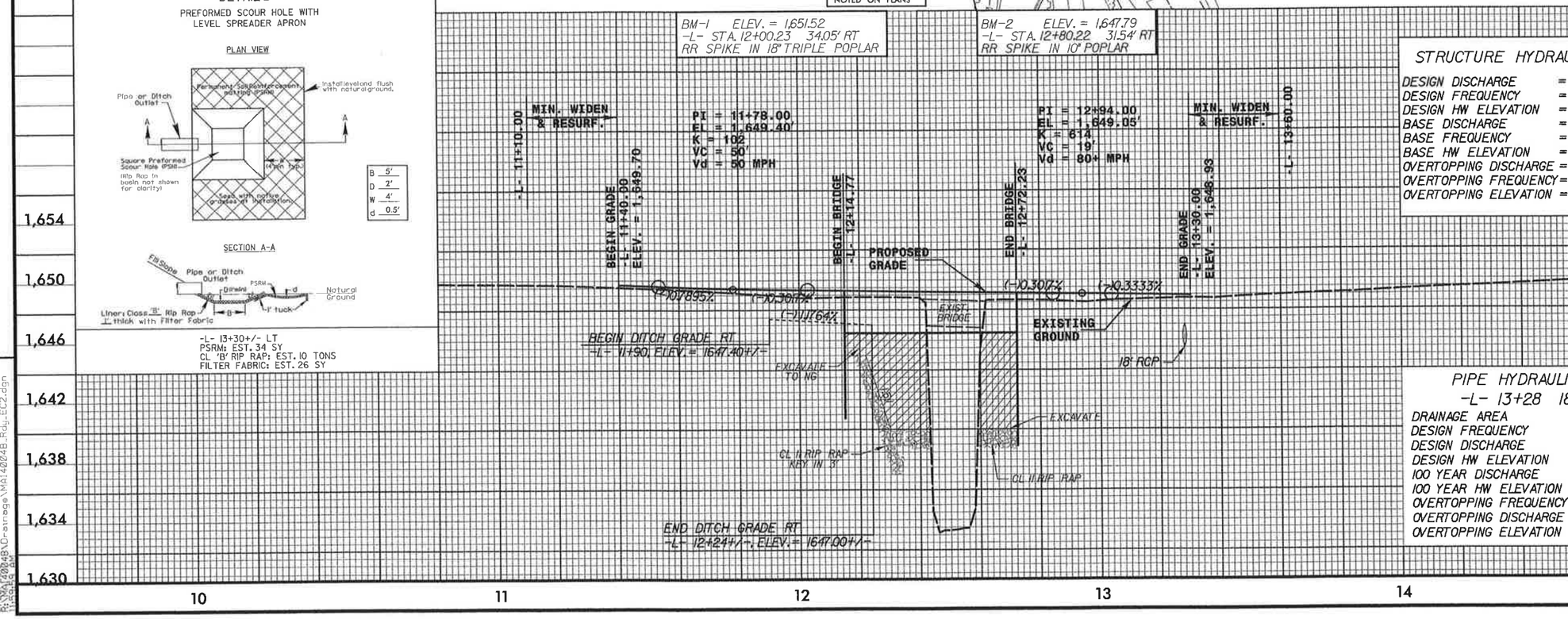

STRUCTURE HYDRAULIC DATA

DESIGN DISCHARGE	= 660	CFS
DESIGN FREQUENCY	= 25	YRS
DESIGN HW ELEVATION	= 1641.0	FT
BASE DISCHARGE	= 1,020	CFS
BASE FREQUENCY	= 100	YRS
BASE HW ELEVATION	= 1642.3	FT
OVERTOPPING DISCHARGE	= 5000	CFS
OVERTOPPING FREQUENCY	= 500	YRS
OVERTOPPING ELEVATION	= 1648.8	FT

PIPE HYDRAULIC DATA
-L- 13+28 18" RCP

DRAINAGE AREA	= 2	AC
DESIGN FREQUENCY	= 25	YRS
DESIGN DISCHARGE	= 6	CFS
DESIGN HW ELEVATION	= 1648.90	FT
100 YEAR DISCHARGE	= 7.2	CFS
100 YEAR HW ELEVATION	= 1649.06	FT
OVERTOPPING FREQUENCY	= 500+	YRS
OVERTOPPING DISCHARGE	= 16	CFS
OVERTOPPING ELEVATION	= 1650.0	FT

REVISIONS

8/17/99

8/23/2010
B-5234_B4048_Drainage\MAI4004B_Rdy_EC2.dgn
11:26:16 AM

EROSION CONTROL PLAN

PROJECT REFERENCE NO.	SHEET NO.
B-5234	EC-4/CONST.4

TGS ENGINEERS
SUITE 141
975 WALNUT STREET
CARY, NC 27511
PH (919) 319-8850

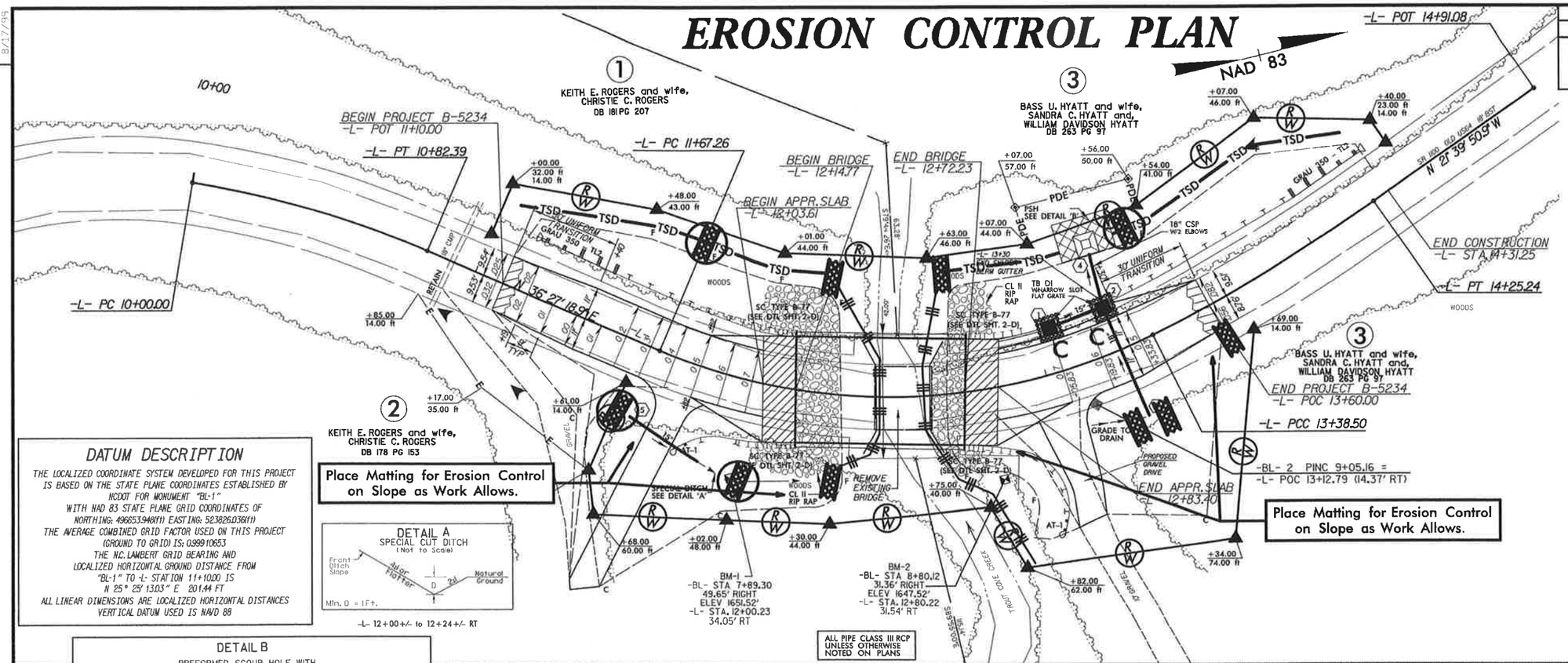

DATUM DESCRIPTION

THE LOCALIZED COORDINATE SYSTEM DEVELOPED FOR THIS PROJECT IS BASED ON THE STATE PLANE COORDINATES ESTABLISHED BY NCDOT FOR MONUMENT "BL-1"
WITH NAD 83 STATE PLANE GRID COORDINATES OF
NORTHING: 496653.948(ft) EASTING: 523826.036(ft)
THE AVERAGE COMBINED GRID FACTOR USED ON THIS PROJECT (GROUND TO GRID) IS: 0.99910653
THE N.C. LAMBERT GRID BEARING AND LOCALIZED HORIZONTAL GROUND DISTANCE FROM "BL-1" TO -L- STATION 11+10.00 IS
N 25° 25' 13.03" E 201.44 FT
ALL LINEAR DIMENSIONS ARE LOCALIZED HORIZONTAL DISTANCES
VERTICAL DATUM USED IS NAVD 88

DETAIL A

SPECIAL CUT DITCH
(Not to Scale)

-L- 12+00+/- to 12+24+/- RT

DETAIL B

PREFORMED SCOUR HOLE WITH LEVEL SPREADER APRON

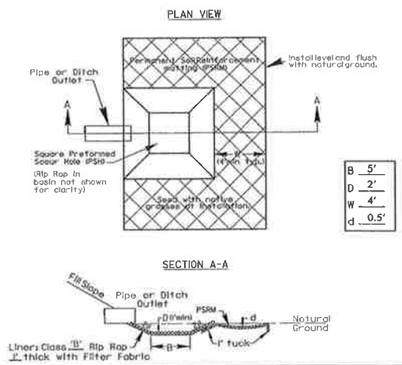

B	5'
D	2'
W	4'
d	0.5'

-L- 13+30+/- LT
PSRM: EST. 34 SY
CL 'B' RIP RAP: EST. 10 TONS
FILTER FABRIC: EST. 26 SY

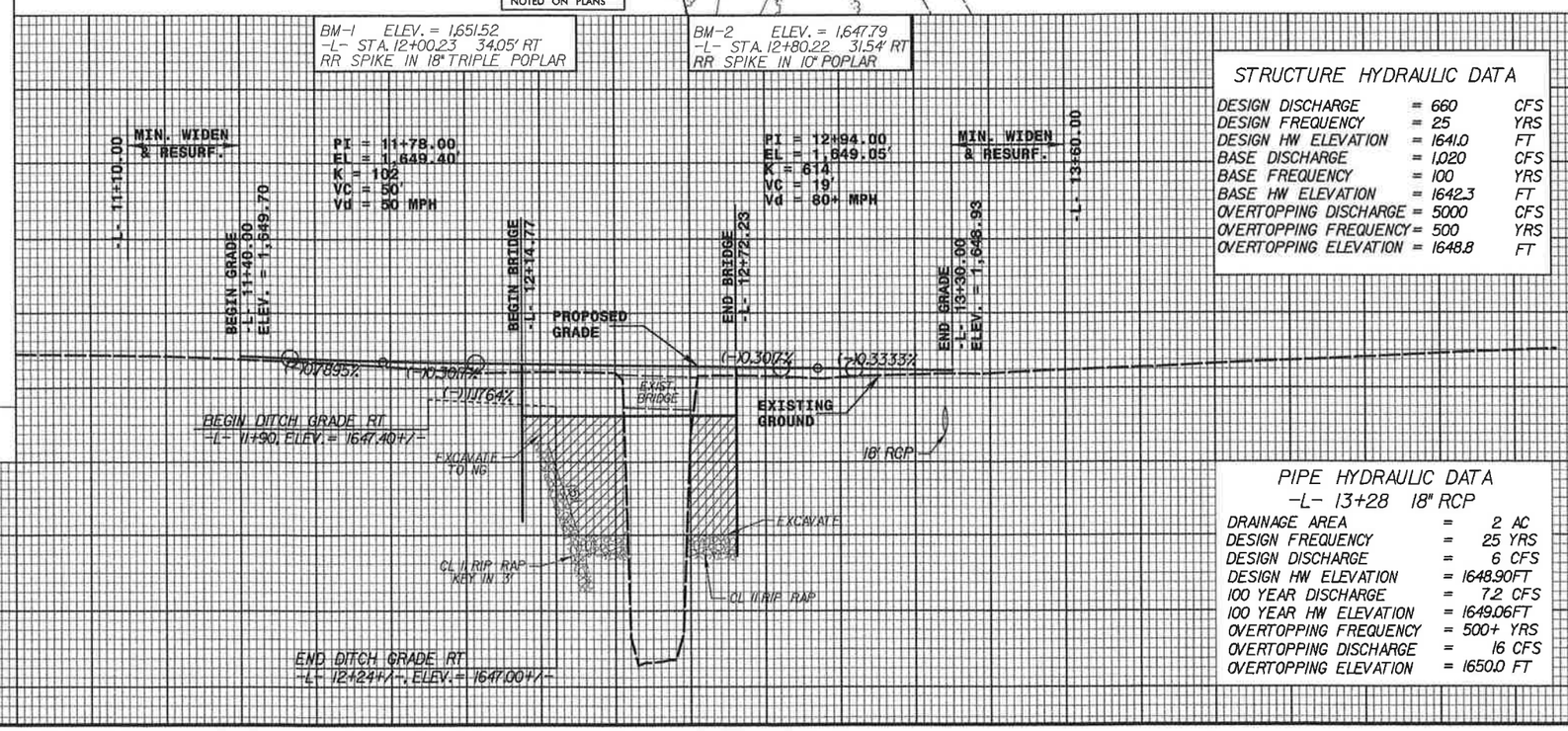

STRUCTURE HYDRAULIC DATA

DESIGN DISCHARGE	=	660	CFS
DESIGN FREQUENCY	=	25	YRS
DESIGN HW ELEVATION	=	1641.0	FT
BASE DISCHARGE	=	1,020	CFS
BASE FREQUENCY	=	100	YRS
BASE HW ELEVATION	=	1642.3	FT
OVERTOPPING DISCHARGE	=	5000	CFS
OVERTOPPING FREQUENCY	=	500	YRS
OVERTOPPING ELEVATION	=	1648.8	FT

PIPE HYDRAULIC DATA

-L- 13+28 18" RCP

DRAINAGE AREA	=	2 AC
DESIGN FREQUENCY	=	25 YRS
DESIGN DISCHARGE	=	6 CFS
DESIGN HW ELEVATION	=	1648.90FT
100 YEAR DISCHARGE	=	7.2 CFS
100 YEAR HW ELEVATION	=	1649.06FT
OVERTOPPING FREQUENCY	=	500+ YRS
OVERTOPPING DISCHARGE	=	16 CFS
OVERTOPPING ELEVATION	=	1650.0 FT

REVISIONS

8/17/99

2/23/2010
R:\Hydraulics\Drainage\WBS 40048\Drainage\WBS40048_Rdy_EC3.dgn
PAGE SETUP BY:

R:\MA14004B\Roadway\Xsc\Earthwork\EW_L.log

PROJ. REFERENCE NO.	SHEET NO.
B-5234	X-SUM

STATE OF NORTH CAROLINA
DIVISION OF HIGHWAYS

CROSS-SECTION SUMMARY

EMBANKMENT COLUMN DOES NOT INCLUDE BACKFILL FOR UNDERCUT

Station L	Uncl. Exc. (cu. yd.)	Embt (cu. yd.)
11+10.000	0	0
11+50.000	0	0
11+73.000	61	48
12+00.000	71	77
12+14.774	71	77

Station L	Uncl. Exc. (cu. yd.)	Embt (cu. yd.)
12+72.226	0	0
13+00.000	0	0
13+30.000	157	84
13+50.000	101	31
14+00.000	2	92
14+31.250	0	0

Approximate quantities only. Unclassified excavation, borrow excavation, fine grading, clearing and grubbing, and removal of existing pavement will be paid for at the lump sum price for "Grading".

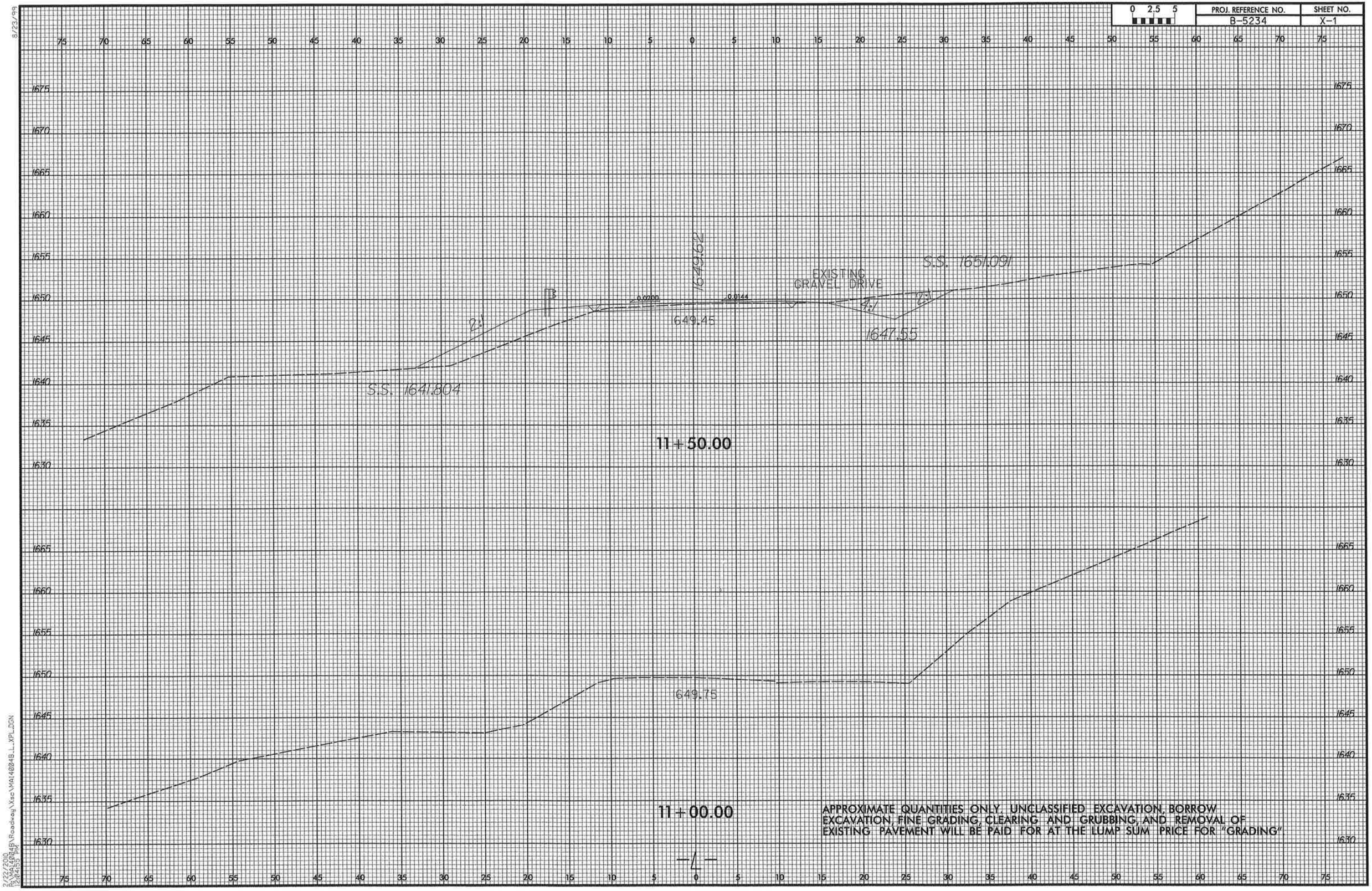
0 2.5 5
PROJ. REFERENCE NO.
B-5234
SHEET NO.
X-1
1649.62
EXISTING GRAVEL DRIVE
S.S. 1651.091
0.0200
0.0144
649.45
1647.55
S.S. 1641.804
11+50.00
649.75
11+00.00
APPROXIMATE QUANTITIES ONLY. UNCLASSIFIED EXCAVATION, BORROW EXCAVATION, FINE GRADING, CLEARING AND GRUBBING, AND REMOVAL OF EXISTING PAVEMENT WILL BE PAID FOR AT THE LUMP SUM PRICE FOR "GRADING"
-L-

0 2.5 5	PROJ. REFERENCE NO.	SHEET NO.
	B-5234	X-2

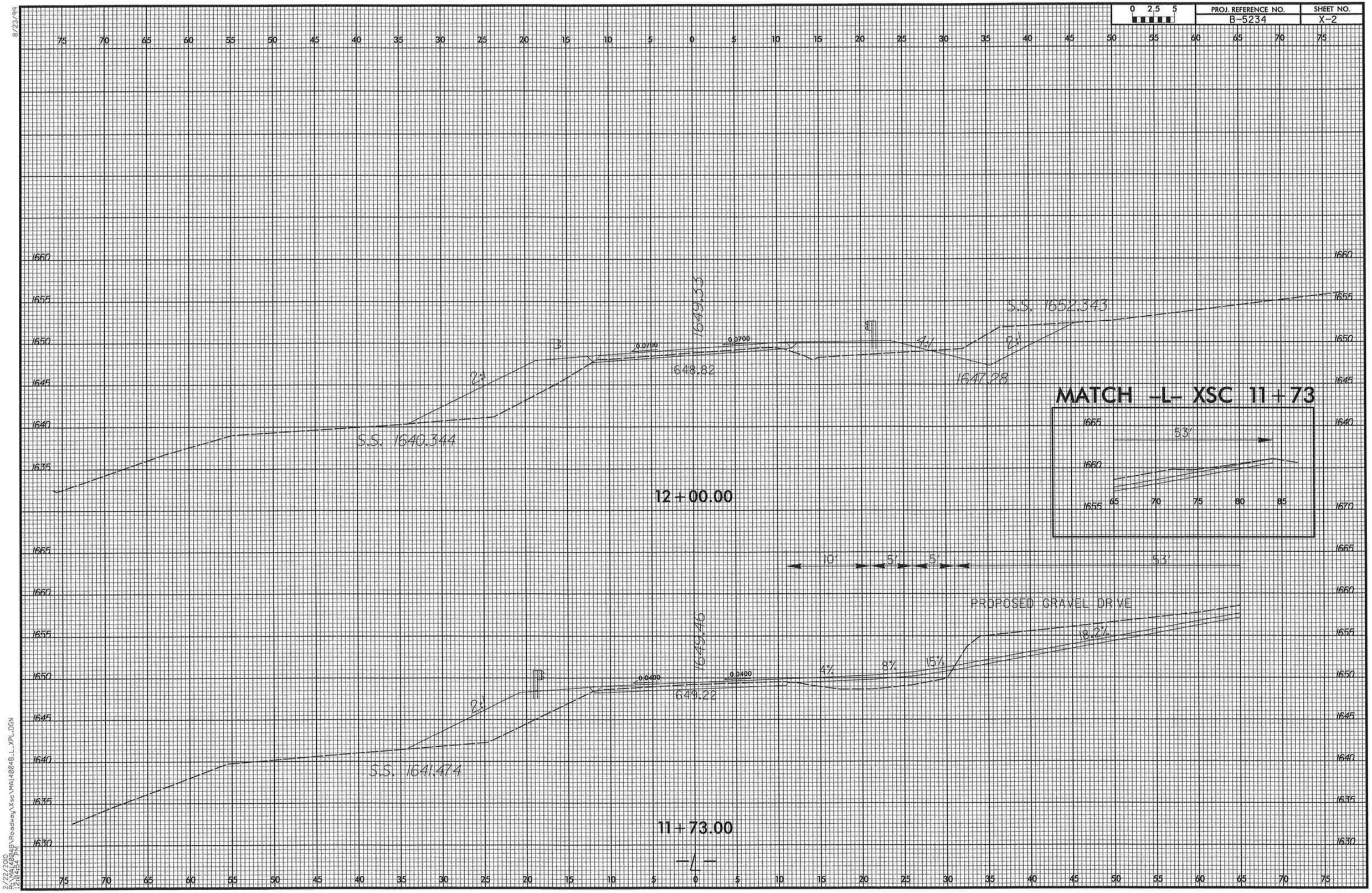

8/23/99

2/22/2010
R:\Kyle\B4246\Roadway\Xsc\MAI4246B_L_XPL.DGN
12:04:54 PM

8/23/99

0 2.5 5	PROJ. REFERENCE NO.	SHEET NO.
	B-5234	X-3

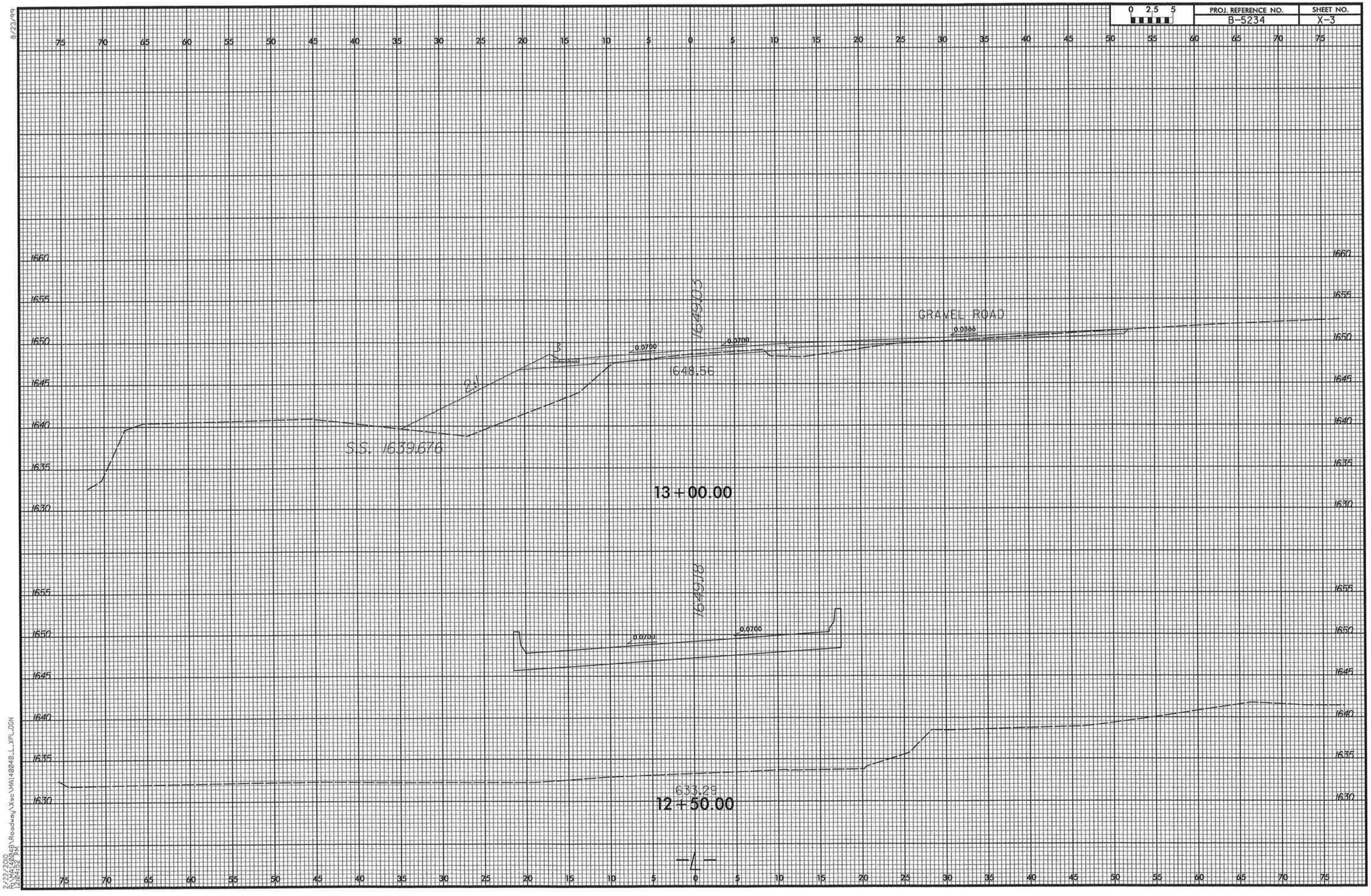

2/22/2010
R:\M4140048\Roadway\Xsec\MA140048_L_XFL.DGN
12:04:52 PM

8/23/99

0 2.5 5	PROJ. REFERENCE NO.	SHEET NO.
	B-5234	X-4

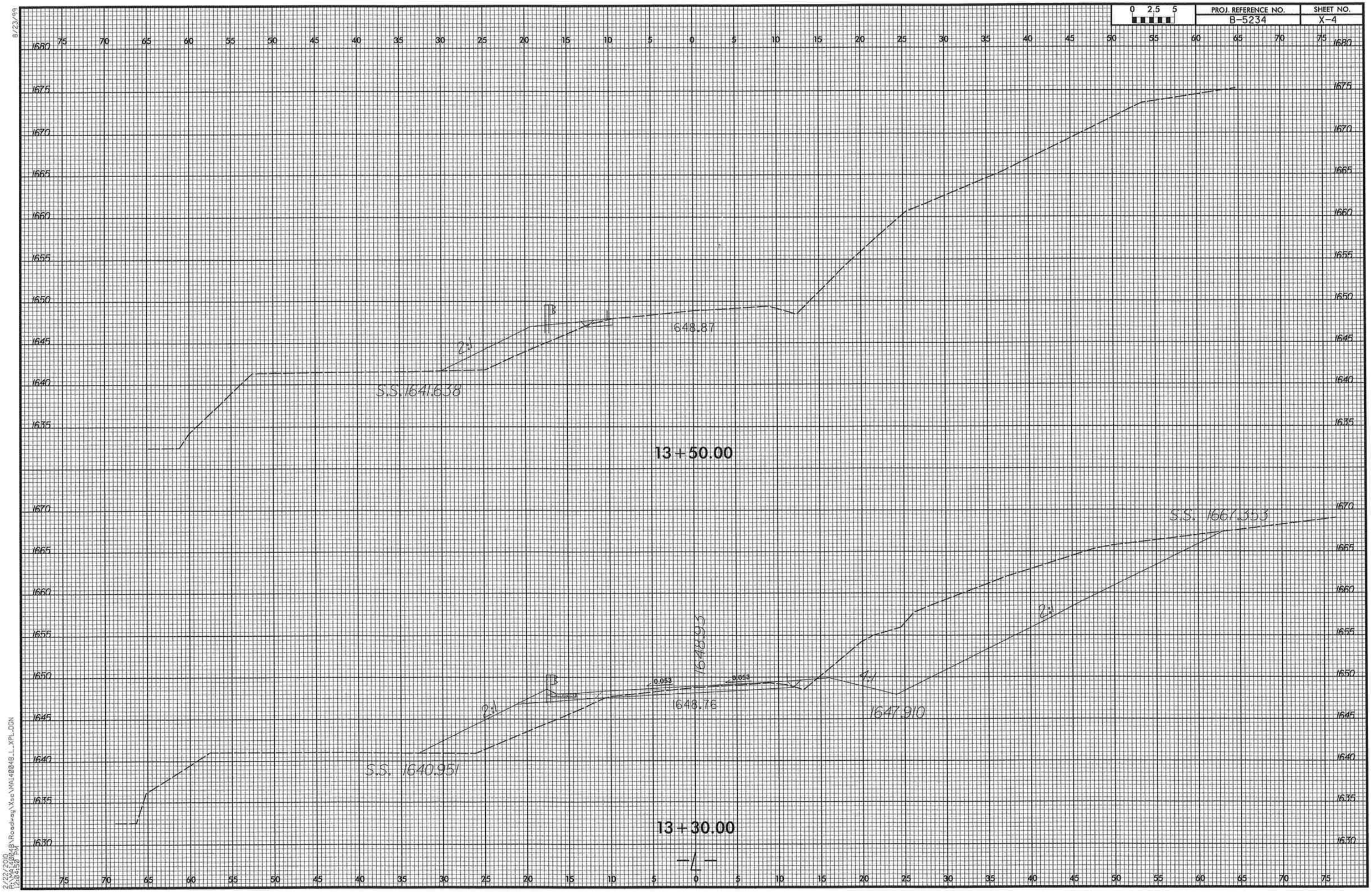

2/22/2010
R:\MAI4024B\Roadway\Xsc\MAI4024B_L_XPL.DGN
12:04:50 PM

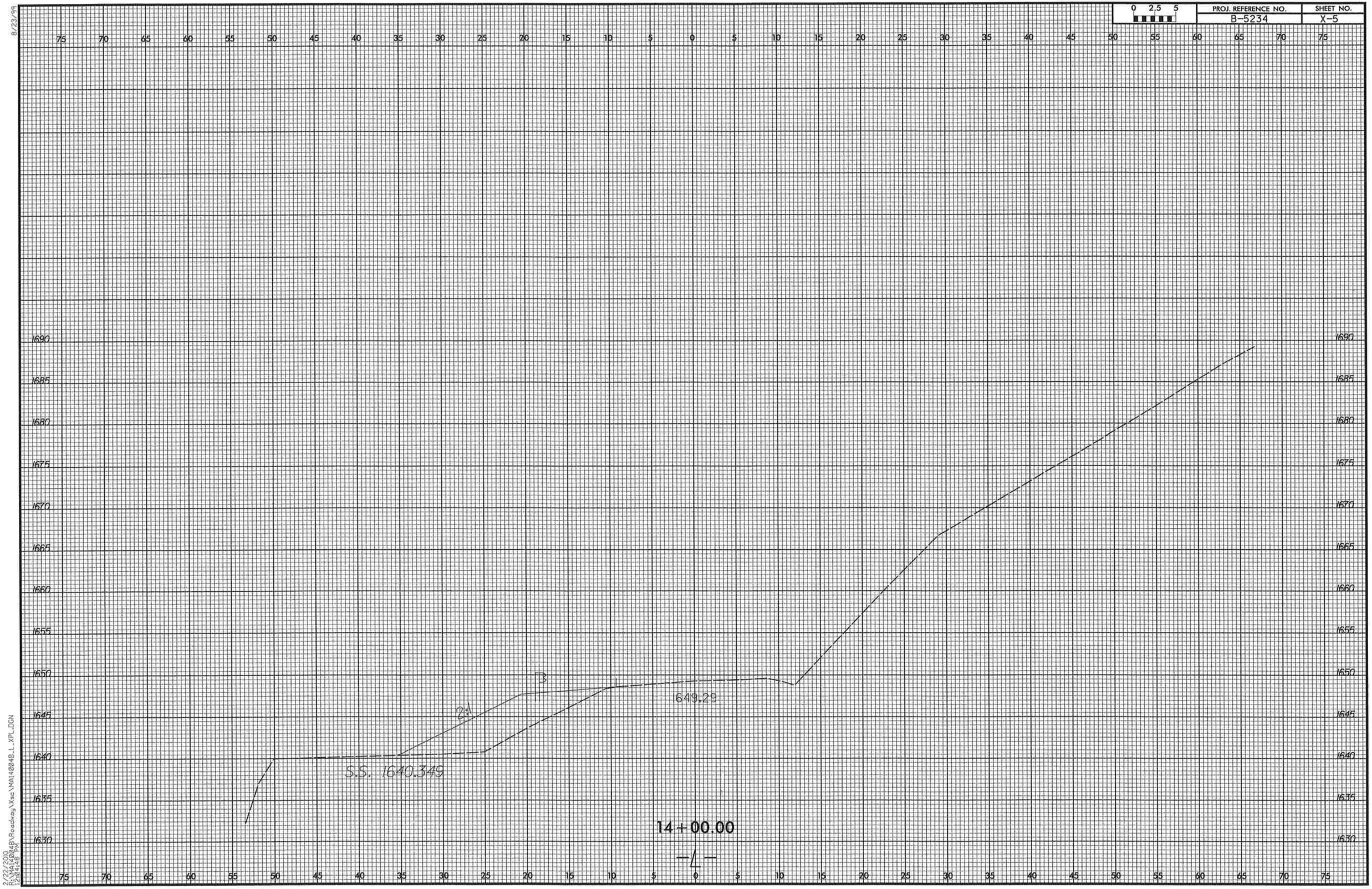
0 2.5 5
PROJ. REFERENCE NO.
B-5234
SHEET NO.
X-5
8/23/99
75 70 65 60 55 50 45 40 35 30 25 20 15 10 5 0 5 10 15 20 25 30 35 40 45 50 55 60 65 70 75
1690
1685
1680
1675
1670
1665
1660
1655
1650
1645
1640
1635
1630
3:1
649.29
S.S. 1640.349
14+00.00
-L-
2/22/2010
8:42:40 AM
R:\Roadway\Xsc\WA142048_L_XPL.DGN
12:04:38 PM

8/23/99

0 2.5 5	PROJ. REFERENCE NO.	SHEET NO.
	B-5234	X-6

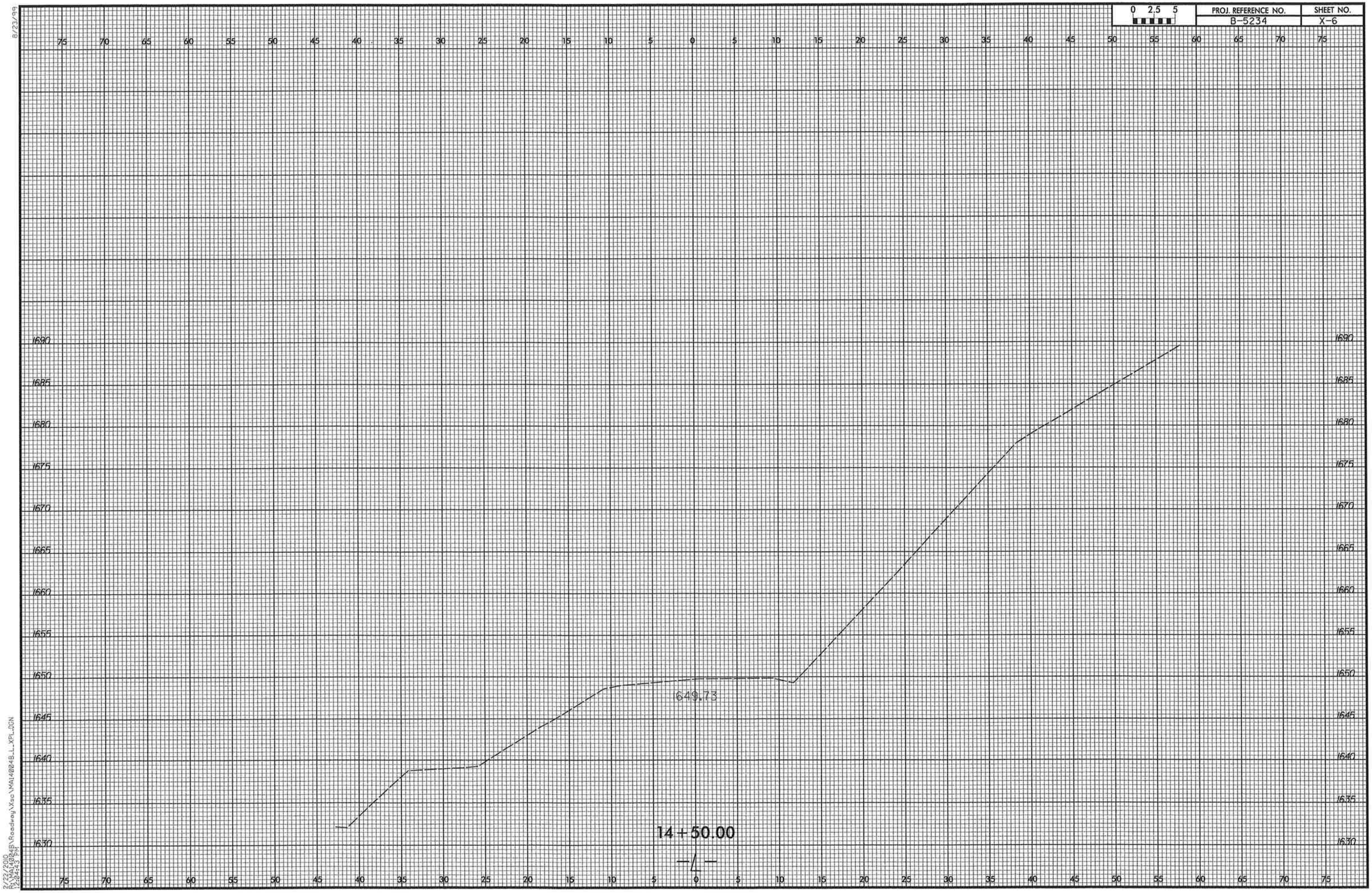

2/22/2010
R:\MA140248\Roadway\Xsc\MA140248_L_XPL.DGN
12:04:43 PM

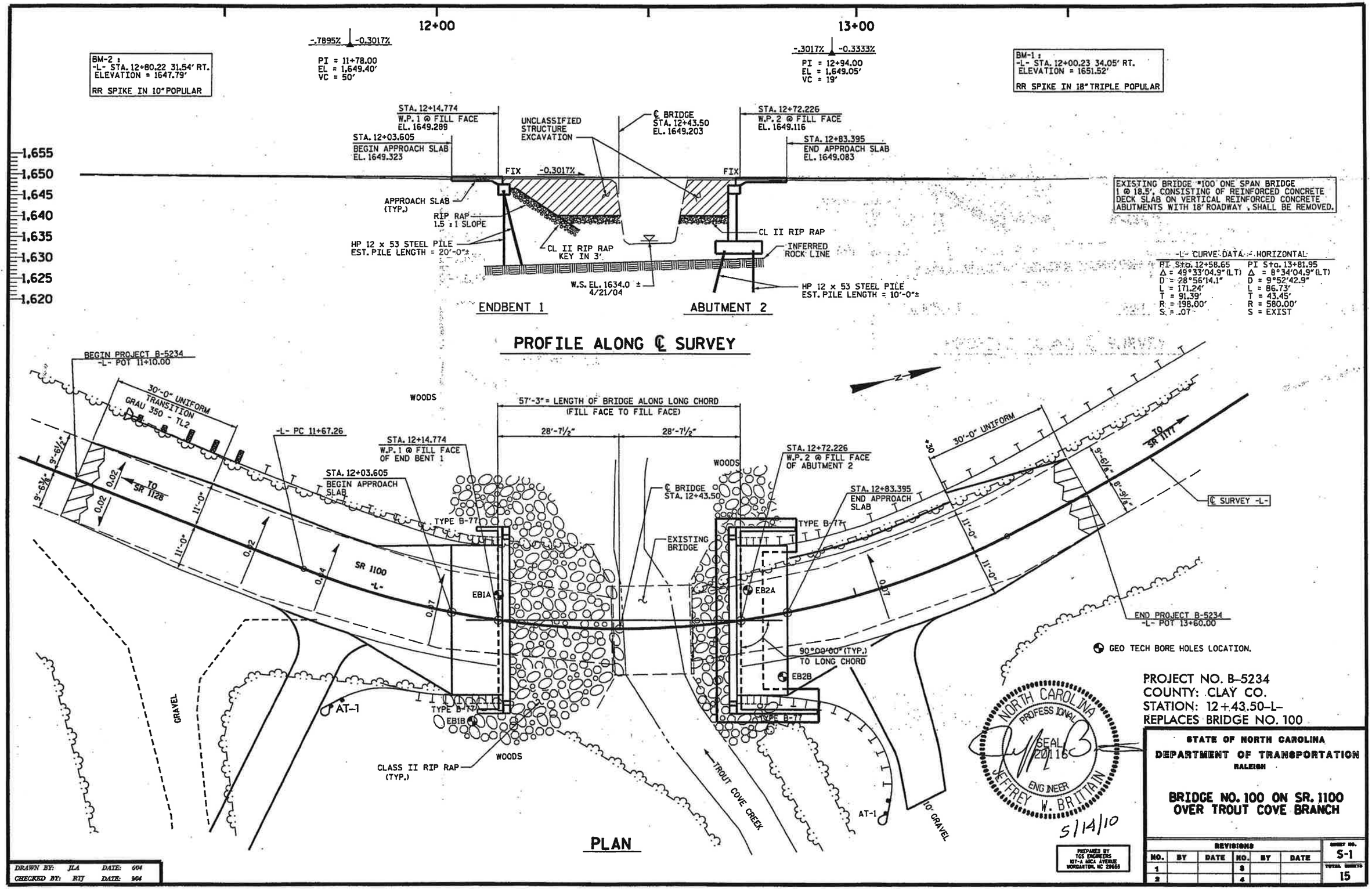

PROJECT NO. B-5234
COUNTY: CLAY CO.
STATION: 12+43.50-L-
REPLACES BRIDGE NO. 100

STATE OF NORTH CAROLINA
DEPARTMENT OF TRANSPORTATION
RALEIGH

BRIDGE NO. 100 ON SR. 1100 OVER TROUT COVE BRANCH

REVISIONS						SHEET NO.
NO.	BY	DATE	NO.	BY	DATE	S-1
1			3			TOTAL SHEETS
2			4			15

NOTES :

1. THE QUANTITY OF RIP RAP TO BE PAID FOR WILL BE THE ACTUAL NUMBER OF TONS OF EACH CLASS OF RIP RAP WHICH HAS BEEN INCORPORATED INTO THE COMPLETED AND ACCEPTED WORK. THE RIP RAP WILL BE MEASURED BY BEING WEIGHED IN TRUCKS ON CERTIFIED PLATFORM SCALES OR OTHER CERTIFIED WEIGHING DEVICES. THE QUANTITY OF RIP RAP WILL BE PAID FOR AT THE CONTRACT UNIT PRICE PER TON.

PLAIN RIP RAP CLASS II (2'-0" THICK)		FILTER FABRIC.
END BENT 1	150 TONS	167 SQ. YDS.
ABUTMENT 2	80 TONS	89 SQ. YDS.
TOTAL	230 TONS	256 SQ. YDS.

2. ADT 2,200 FOR YEAR 2010.
3. PILES FOR END BENT NO.1 SHALL BE DRIVEN TO A MINIMUM BEARING CAPACITY OF 45 TONS EACH
4. WHEN DRIVING PILES, THE MAXIMUM BLOW COUNTS SHALL NOT BE EXCEEDED.
5. SHAFT EXCAVATION SHALL BE UTILIZED TO INSTALL PILES TO ELEVATION 1621 FEET AT END BENT NO. 2. SEE SHAFT EXCAVATION SPECIAL PROVISION.
6. STEEL PILE POINTS ARE REQUIRED FOR PILES AT END BENT NO. 1. SEE SPECIAL PROVISIONS FOR STEEL PILE POINTS.
7. PILING SHALL BE DRIVEN CONTINUOUSLY IN ACCORDANCE WITH THE STANDARD SPECIFICATIONS SECTION 450-8 UNTIL THE LOAD IS OBTAINED AT OR PAST THE MINIMUM TIP TO THE ESTIMATED LENGTH SHOWN ON THE PLANS. IF LOAD IS STILL NOT OBAINED AT THIS POINT, THE CONTRACTOR MAY SUSPEND DRIVING AND ALLOW THE PILE TO SET BEFORE RESUMING PILE DRIVING. WHEN DRIVING IS RESUMED, THE HAMMER SHALL BE WARM AND OPERATED AT A SUFFICIENT NUMBER OF BLOWS TO OVERCOME THE FRICTION FORCE (MIN. 10 BLOWS) BEFORE FINAL BEARING IS CHECKED.
8. THE EXISTING BRIDGE SHALL BE REMOVED BY SAWING AND/OR NON-SHATTERING METHODS SUCH THAT DEBRIS WILL NOT FALL INTO THE WATER.
9. THE STRUCTURE HAS BEEN DESINGED IN ACCORDANCE WITH FHWA'S TECHNICAL ADVISORY T5140.20 (SCOUR AT BRIDGES).
10. THE STEEL PILES SHALL BE GALVANIZED IN ACCORDANCE WITH SECTION 1076 OF THE STANDARD SPECIFICATIONS. FOR GALVANIZING STEEL PILES, SEE SPECIAL PROVISIONS.
11. ASSUMED LIVE LOAD = HS20.
12. FOR CRANE SAFETY, SEE SPECIAL PROVISIONS.
13. FOR FALSEWORK AND FORMWORK, SEE SPECIAL PROVISIONS.
14. FOR SUMITTAL OF WORKING DRAWINGS, SEE SPECIAL PROVISIONS.

-L- CURVE DATA

PI Sta 12+58.65
Δ = 49°33'04.9" (LT)
D = 28°56'14.1"
L = 171.24'
T = 91.39'
R = 198.00'
SE = .07

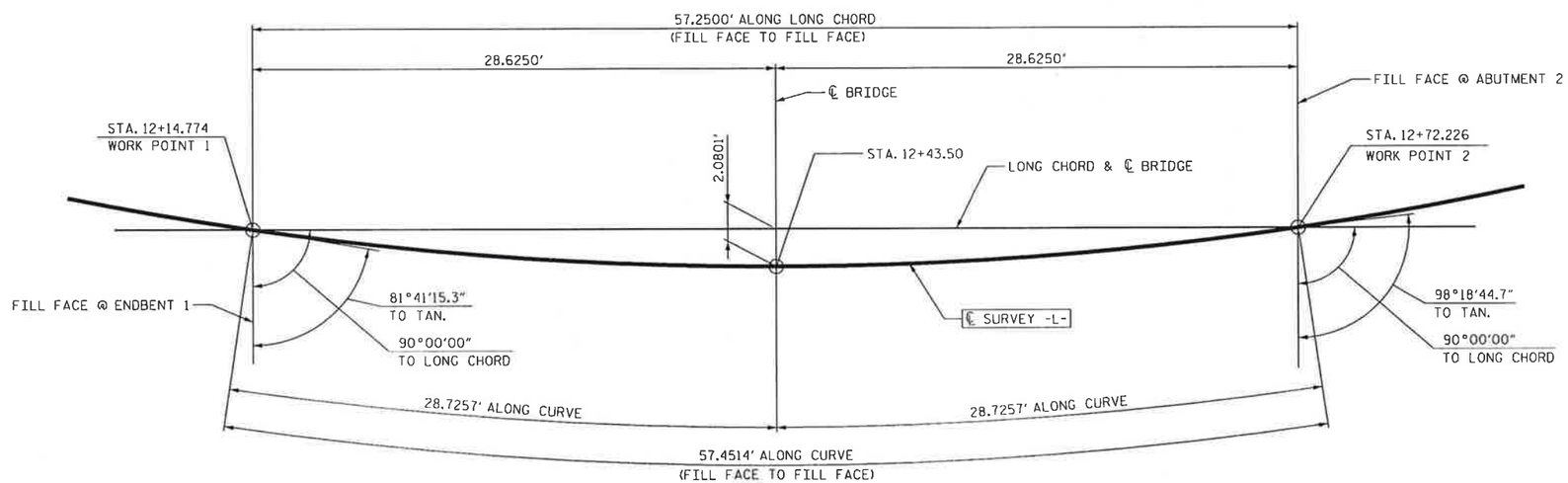

LONG CHORD LAYOUT

NOTE : END BENTS ARE PARALLEL.

NORTH CAROLINA PROFESSIONAL SEAL 20116 ENGINEER JEFFREY W. BRITTAIN

2/18/10

PROJECT NO. B-5234
COUNTY: CLAY CO.
STATION: 12 + 43.50-L-
REPLACES BRIDGE NO. 100

STATE OF NORTH CAROLINA
DEPARTMENT OF TRANSPORTATION
RALEIGH

LONG CHORD LAYOUT

REVISIONS						SHEET NO.
NO.	BY	DATE	NO.	BY	DATE	S-2
1			3			TOTAL SHEETS
2			4			15

PREPARED BY
TGS ENGINEERS
107-A MICA AVENUE
MORGANTON, NC 28655

DRAWN BY: JLA DATE: 7/04
CHECKED BY: RTJ DATE: 9/04

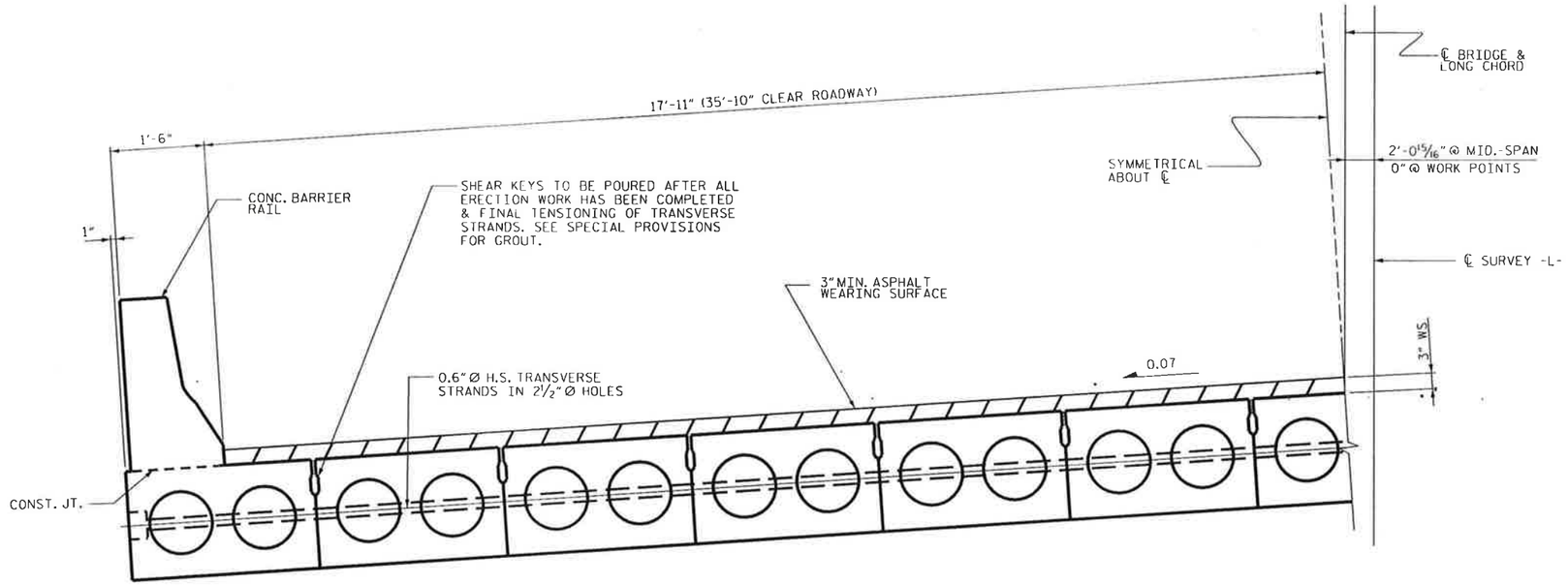

TYPICAL SECTION

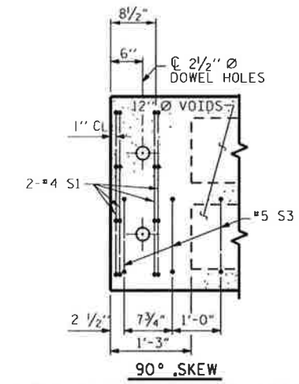

PART PLAN-EXTERIOR SECTION

NOTE: EXTERIOR SECTION SHOWN-INTERIOR SECTION SIMILAR EXCEPT OMIT S3 BARS.

FIXED END

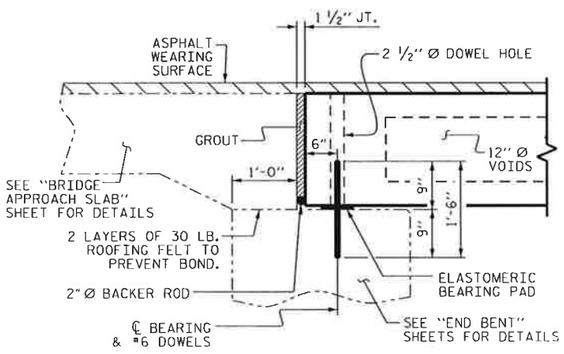

SECTION AT END BENT

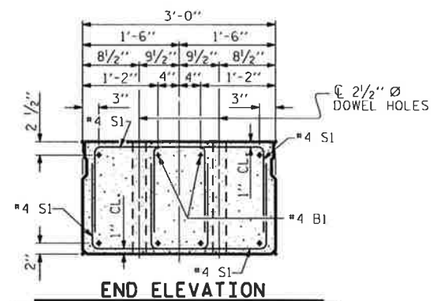

END ELEVATION

SHOWING PLACEMENT OF DOUBLE STIRRUPS AND LOCATION OF DOWEL HOLES.
(STRAND LAYOUT NOT SHOWN.)
INTERIOR SLAB SECTION SHOWN-EXTERIOR SLAB SECTION SIMILAR EXCEPT SHEAR KEY LOCATION.

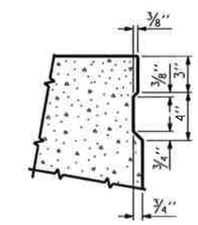

SHEAR KEY DETAIL

NOTE: OMIT SHEAR KEY ON OUTSIDE FACE OF EXTERIOR CORED SLABS.

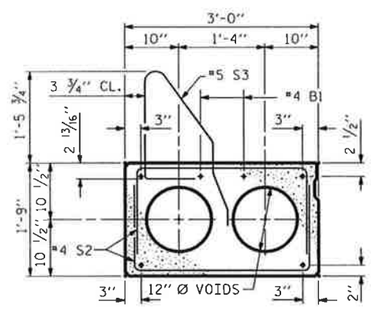

EXTERIOR SLAB SECTION

(FOR PRESTRESSED STRAND LAYOUT, SEE INTERIOR SLAB SECTION.)

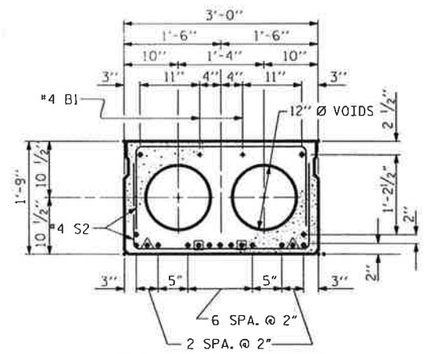

INTERIOR SLAB SECTION

0.6" Ø LOW RELAXATION STRAND LAYOUT

17 - 0.6"Ø H.S. STRANDS

◬ DEBOND STRANDS - (2) @ 5' FROM END OF CORED SLAB.

▣ DEBOND STRANDS - (2) @ 10' FROM END OF CORED SLAB.

PROJECT NO. B-5234
COUNTY: CLAY
STATION: 12 + 43.50-L-
REPLACES BRIDGE NO. 100

NORTH CAROLINA PROFESSIONAL SEAL 20116 ENGINEER JEFFREY W. BRITTAIN

4/14/10

PREPARED BY
TCS ENGINEERS
107-A MICA AVENUE
MORGANTON, NC 28655

STATE OF NORTH CAROLINA
DEPARTMENT OF TRANSPORTATION
RALEIGH

CORED SLAB DETAILS

SHEET 1 OF 2

REVISIONS						SHEET NO.
NO.	BY	DATE	NO.	BY	DATE	S-3
1			3			TOTAL SHEETS
2			4			15

DRAWN BY: RTJ DATE: 11/09
CHECKED BY: JLA DATE: 1/10

GRADE 270 STRANDS	
	0.6"Ø L.R.
AREA (SQUARE INCHES)	0.217
ULTIMATE STRENGTH (LBS. PER STRAND)	58,600
APPLIED PRESTRESS (LBS. PER STRAND)	43,950

BAR TYPES

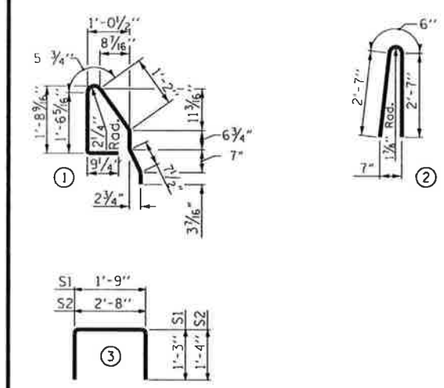

ALL BAR DIMENSIONS ARE OUT TO OUT

BILL OF MATERIAL FOR ONE CORED SLAB SECTION

				EXTERIOR UNIT		INTERIOR UNIT	
BAR	NUMBER	SIZE	TYPE	LENGTH	WEIGHT	LENGTH	WEIGHT
B1	4	#4	STR	28'-9"	77	28'-9"	77
S1	16	#4	3	4'-3"	45	4'-3"	45
S2	98	#4	3	5'-4"	349	5'-4"	349
* S3	56	#5	1	5'-5"	316		
REINFORCING STEEL					471 LBS.		471 LBS.
* EPOXY COATED REINFORCING STEEL					316 LBS.		
5,000 P.S.I. CONCRETE					7.8 CU. YDS.		7.8 CU. YDS.
0.6"Ø L.R. STRANDS	No. 17						No. 17

DEAD LOAD DEFLECTION AND CAMBER

	EXTERIOR	INTERIOR
	0.6"Ø L.R. STRAND	0.6"Ø L.R. STRAND
CAMBER (SLAB ALONE IN PLACE)	2.605"↑	2.578"↑
DEFLECTION DUE TO SUPERIMPOSED DEAD LOAD**	0.466"↓	0.466"↓
FINAL CAMBER	2.139" (UP)	2.112" (UP)

** INCLUDES FUTURE WEARING SURFACE

BILL OF MATERIAL FOR CONCRETE BARRIER RAIL

BAR	BARS PER SPAN					TOTAL NO.	SIZE	TYPE	LENGTH	WEIGHT
		SPAN A								
* B2		28				28	#5	STR.	27'-1"	791
* S4		112				112	#5	2	5'-8"	662
* EPOXY COATED REINFORCING STEEL						= 1,453 LBS.				
CLASS AA CONCRETE						= 12.6 CU.YDS.				
TOTAL LIN. FT. OF CONCRETE BARRIER RAIL						= 110				

CORED SLABS REQUIRED

	NUMBER	LENGTH	TOTAL LENGTH
EXTERIOR C.S.	2	55'-0"	110'-0"
INTERIOR C.S.	11	55'-0"	605'-0"
TOTAL	13		715'-0"

NOTES

ALL PRESTRESSING STRANDS SHALL BE 7-WIRE LOW RELAXATION GRADE 270 STRANDS AND SHALL CONFORM TO AASHTO M203 EXCEPT FOR SAMPLING REQUIREMENTS WHICH SHALL BE IN ACCORDANCE WITH THE STANDARD SPECIFICATIONS.

ALL REINFORCING STEEL CAST WITH THE CORED SLAB SECTIONS SHALL BE GRADE 60 AND SHALL BE INCLUDED IN THE UNIT PRICE BID FOR PRESTRESSED CONCRETE CORED SLABS.

RECESSES FOR TRANSVERSE STRANDS SHALL BE GROUTED AFTER THE TENSIONING OF THE STRANDS.

THE 2 1/2 "Ø DOWEL HOLES AT FIXED ENDS OF SLAB SECTIONS SHALL BE

FILLED WITH NON-SHRINK GROUT.

THE 2"Ø BACKER ROD SHALL CONFORM TO THE REQUIREMENTS OF TYPE M BOND BREAKER. SEE SECTION 1028 OF THE STANDARD SPECIFICATIONS.

WHEN CORED SLABS ARE CAST, A POSITIVE HOLD-DOWN SYSTEM SHALL BE EMPLOYED TO PREVENT VOIDS FROM RISING OR MOVING SIDEWAYS. THIS SYSTEM SHALL BE DESIGNED TO BE LEFT IN PLACE UNTIL THE CONCRETE HAS REACHED RELEASE STRENGTH. AT LEAST THREE WEEKS PRIOR TO CASTING CORED SLABS, THE CONTRACTOR SHALL SUBMIT TO THE ENGINEER FOR REVIEW AND COMMENT, DETAILED DRAWINGS OF THE PROPOSED HOLD-DOWN SYSTEM. IN ADDITION TO STRUCTURAL DETAILS, LOCATION AND SPACING OF THE HOLD-DOWNS SHALL BE INDICATED.

THE TRANSFER OF LOAD FROM THE ANCHORAGES TO THE CORED SLAB UNIT SHALL BE DONE WHEN THE CONCRETE HAS REACHED A COMPRESSIVE STRENGTH OF NOT LESS THAN 4,000 PSI.

ALL REINFORCING STEEL IN BARRIER RAILS SHALL BE EPOXY COATED.

PRESTRESSING STRANDS SHALL BE CUT FLUSH WITH THE CORED SLAB UNIT ENDS.

APPLY EPOXY PROTECTIVE COATING TO CORED SLAB UNIT ENDS.

TRANSVERSE POST TENSIONING OF THE CORED SLAB UNITS SHALL BE DONE IN ACCORDANCE WITH THE STANDARD SPECIFICATIONS EXCEPT THAT THE STRANDS SHALL BE 0.6"Ø AND TENSIONED TO 43,950 POUNDS.

VERTICAL GROOVED CONTRACTION JOINTS, 1/2 " IN DEPTH, SHALL BE TOOLED IN ALL EXPOSED FACES OF THE BARRIER RAIL AND IN ACCORDANCE WITH ARTICLE 825-10(B) OF THE STANDARD SPECIFICATIONS. A VERTICAL CONTRACTION JOINT SHALL BE LOCATED AT EACH THIRD POINT BETWEEN BARRIER RAIL EXPANSION JOINTS. ONLY ONE CONTRACTION JOINT IS REQUIRED AT MIDPOINT OF BARRIER RAIL SEGMENTS LESS THAN 20 FEET IN LENGTH AND NO CONTRACTION JOINTS ARE REQUIRED FOR THOSE SEGMENTS LESS THAN 10 FEET IN LENGTH.

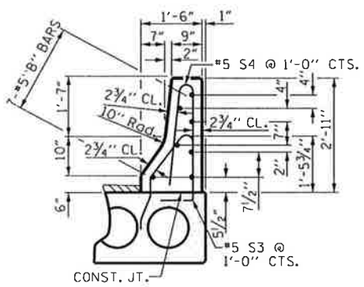

SECTION THRU RAIL

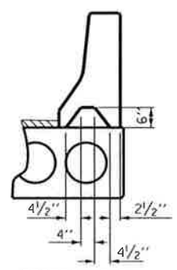

SECTION S-S
AT DAM IN OPEN JOINT
(THIS IS TO BE USED ONLY WHEN SLIP FORM IS USED)

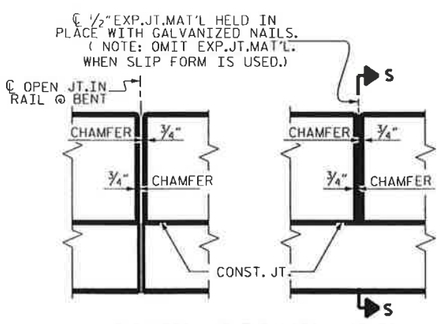

ELEVATION AT EXPANSION JOINTS

BARRIER RAIL DETAILS

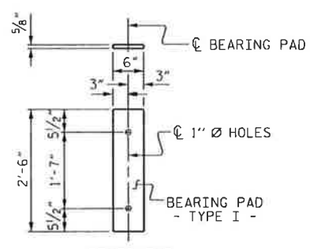

FIXED END
(TYPE I - 26 REQ'D)

ELASTOMERIC BEARING DETAILS

4/14/10

PROJECT NO. B-5234
COUNTY: CLAY
STATION: 12+43.50-L-
REPLACES BRIDGE NO. 100

STATE OF NORTH CAROLINA
DEPARTMENT OF TRANSPORTATION
RALEIGH

CORED SLAB DETAILS

SHEET 1 OF 2

REVISIONS						SHEET NO.
NO.	BY	DATE	NO.	BY	DATE	S-4
1			3			TOTAL SHEETS
2			4			15

PREPARED BY
TCS ENGINEERS
107-A MICA AVENUE
MORGANTON, NC 28655

DRAWN BY: RTJ DATE: 11/09
CHECKED BY: JLA DATE: 12/09

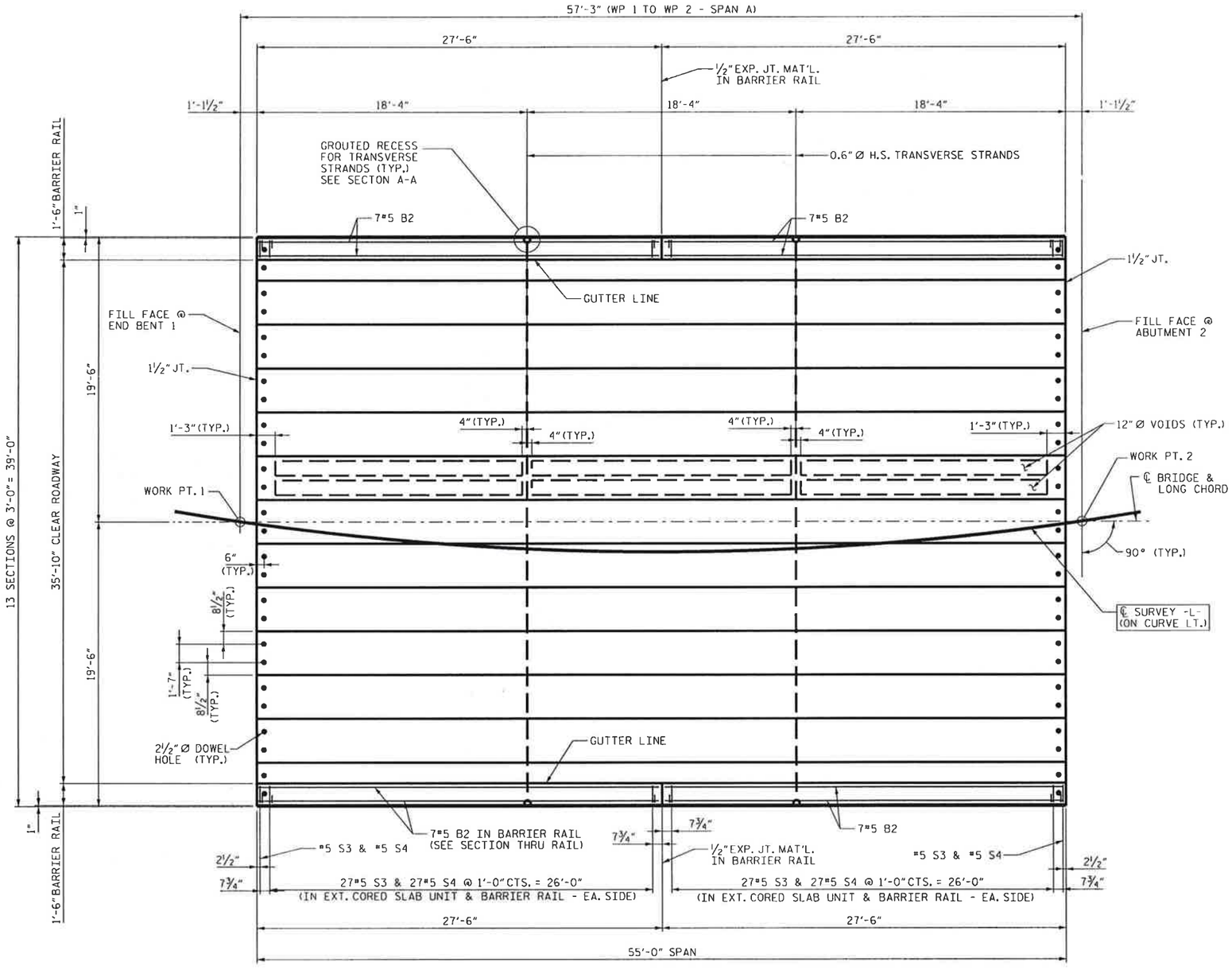

SUPERSTRUCTURE PLAN VIEW

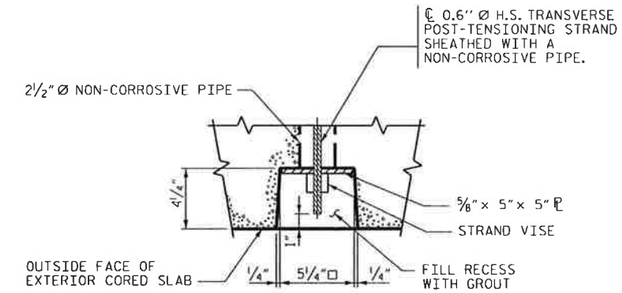

SECTION A-A

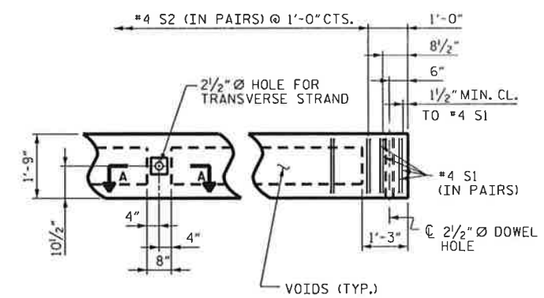

SLAB ELEVATION

PROJECT NO. B-5234
COUNTY: CLAY
STATION: 12 + 43.50-L-
REPLACES BRIDGE NO. 100

NORTH CAROLINA PROFESSIONAL SEAL 20116 ENGINEER JEFFREY W. BRITTAIN

2/18/10

PREPARED BY
TCS ENGINEERS
107-A MICA AVENUE
MORGANTON, NC 28655

STATE OF NORTH CAROLINA
DEPARTMENT OF TRANSPORTATION
RALEIGH

PLAN OF SPAN A

REVISIONS						SHEET NO.
NO.	BY	DATE	NO.	BY	DATE	S-5
1			3			TOTAL SHEETS
2			4			15

DRAWN BY: RTJ DATE: 10/04
CHECKED BY: MNW DATE: 11/04

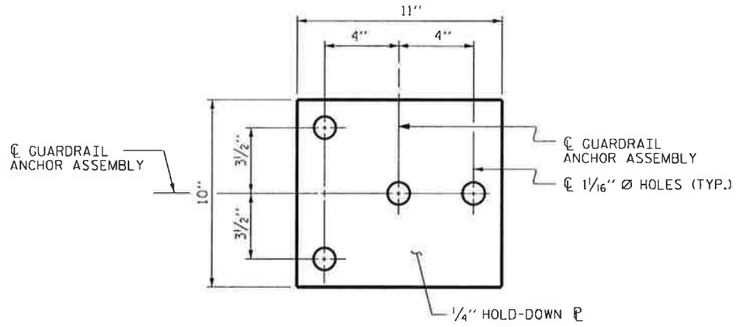

PLAN

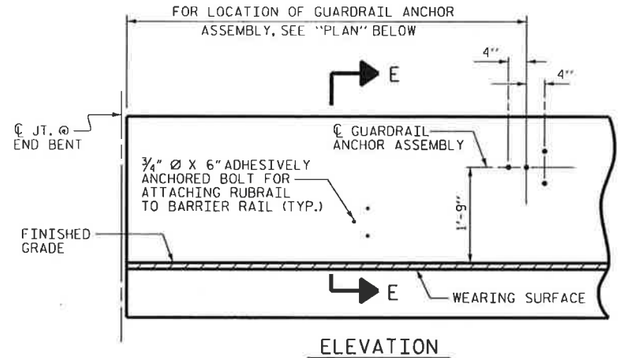

ELEVATION

FOR LOCATION OF RUBRAIL, SEE ROADWAY STD. 862.03

NOTES

THE GUARDRAIL ANCHOR ASSEMBLY SHALL CONSIST OF A ¼" HOLD DOWN PLATE AND 4 - ⅞" Ø BOLTS WITH NUTS AND WASHERS, RUBRAIL, AND ADHESIVELY ANCHORED BOLTS.

THE HOLD-DOWN PLATE SHALL CONFORM TO AASHTO M270 GRADE 36. AFTER FABRICATION, THE HOLD-DOWN PLATE SHALL BE HOT-DIP GALVANIZED IN ACCORDANCE

WITH AASHTO M111.

BOLTS SHALL CONFORM TO THE REQUIREMENTS OF ASTM A307 AND NUTS SHALL CONFORM TO THE REQUIREMENTS OF AASHTO M291. BOLTS, NUTS AND WASHERS SHALL

BE GALVANIZED. (AT THE CONTRACTOR'S OPTION, STAINLESS STEEL BOLTS, NUTS AND WASHERS MAY BE USED AS AN ALTERNATE FOR THE ⅞" Ø GALVANIZED BOLTS, NUTS AND WASHERS. THEY SHALL CONFORM TO OR EXCEED THE MECHANICAL REQUIREMENTS OF ASTM A307. THE USE OF THIS ALTERNATE SHALL BE APPROVED BY THE ENGINEER.)

THE GUARDRAIL ANCHOR ASSEMBLY IS REQUIRED AT ALL POINTS WHERE APPROACH GUARDRAIL IS TO BE ATTACHED TO THE END OF BARRIER RAIL. FOR POINTS OF ATTACHMENT, SEE SKETCH.

AFTER INSTALLATION, THE EXPOSED THREAD OF THE BOLT SHALL BE BURRED WITH A SHARP POINTED TOOL.

THE COST OF THE GUARDRAIL ANCHOR ASSEMBLY SHALL BE INCLUDED IN THE UNIT CONTRACT PRICE BID FOR CONCRETE BARRIER RAIL.

THE 1 ¼" Ø HOLES SHALL BE FORMED OR DRILLED WITH A CORE BIT. IMPACT TOOLS
WILL NOT BE PERMITTED. ANY CONCRETE DAMAGED BY THIS WORK SHALL BE REPAIRED TO THE SATISFACTION OF THE ENGINEER.

THE C6 X 8.2 RUBRAIL IS TO BE ADHESIVELY ANCHORED TO THE RAIL USING THREE ¾" Ø X 6" BOLTS WITH WASHERS. LEVEL ONE FIELD TESTING IS REQUIRED, AND THE YIELD LOAD OF THE ¾" Ø BOLT IS 12 KIPS. FOR ADHESIVELY ANCHORED ANCHOR BOLTS OR DOWELS, SEE SPECIAL PROVISIONS. SEE ROADWAY STANDARD 862.03 FOR DETAILS AND LOCATION OF THE RUBRAIL.

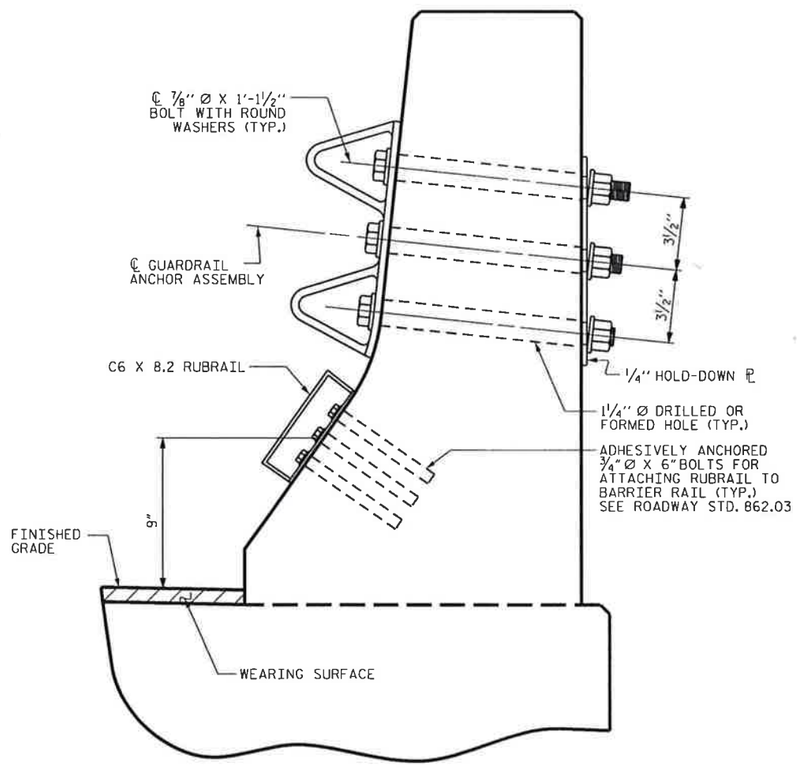

SECTION E-E

GUARDRAIL ANCHOR ASSEMBLY DETAILS

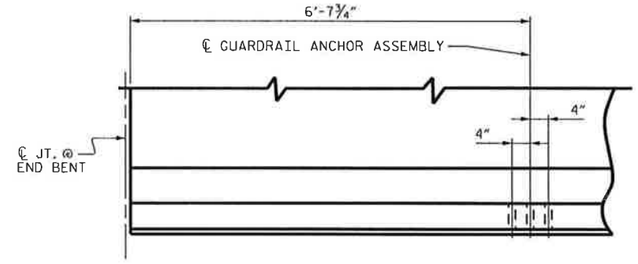

PLAN

LOCATION OF ANCHORS FOR GUARDRAIL

END BENT #1 SHOWN, END BENT #2 SIMILAR.

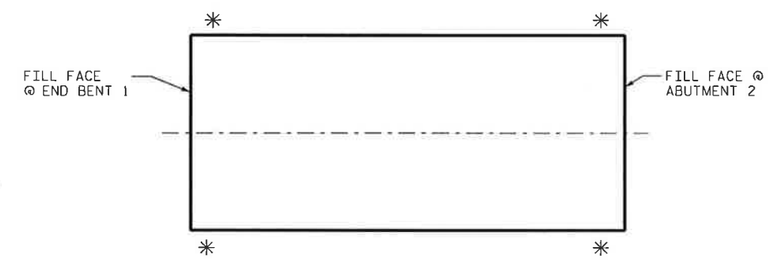

SKETCH SHOWING POINTS OF ATTACHMENTS

✳ DENOTES GUARDRAIL ANCHOR ASSEMBLY

PROJECT NO. B-5234
COUNTY: CLAY
STATION: 12 + 43.50-L-
REPLACES BRIDGE NO. 100

NORTH CAROLINA PROFESSIONAL SEAL 20116 ENGINEER JEFFREY W. BRITTAIN

2/18/10

PREPARED BY
TCS ENGINEERS
107-A MICA AVENUE
MORGANTON, NC 28655

STATE OF NORTH CAROLINA
DEPARTMENT OF TRANSPORTATION
RALEIGH

STANDARD GUARDRAIL ANCHORAGE DETAILS FOR BARRIER RAIL TYPE B-77

REVISIONS						SHEET NO.
NO.	BY	DATE	NO.	BY	DATE	S-6
1			3			TOTAL SHEETS
2			4			15

DRAWN BY: RTJ DATE: 12/09
CHECKED BY: JLA DATE: 2/10

STD. NO. GRA2

▲ INDICATES PILE BATTER 3 : 12 IN DIRECTION SHOWN

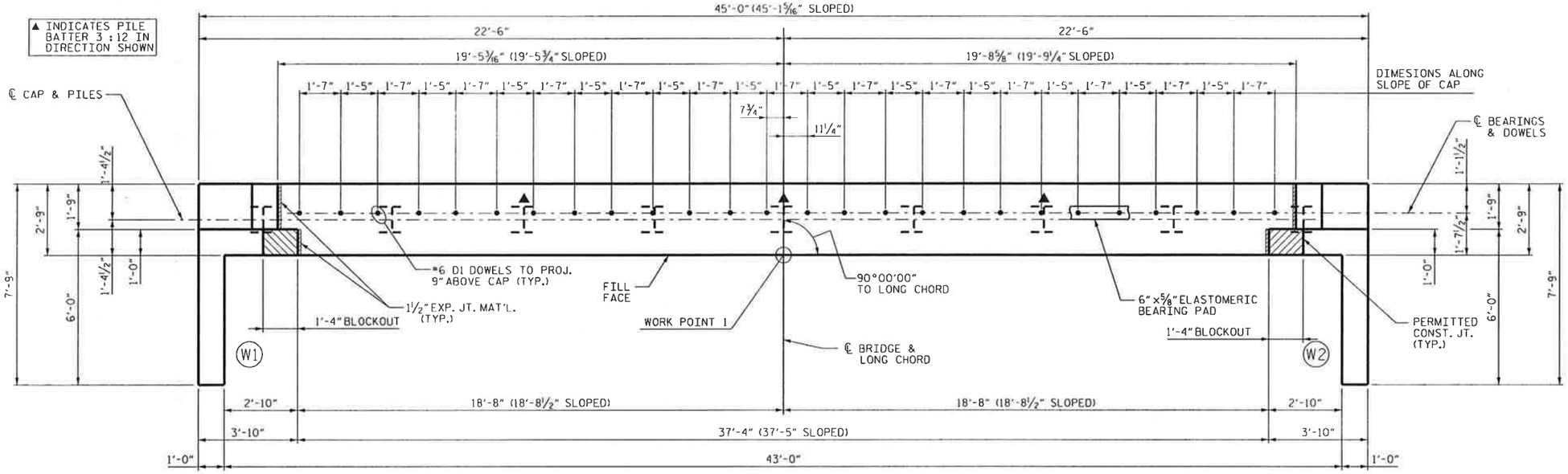

PLAN

NOTE :
STIRRUPS IN CAP MAY BE SHIFTED AS NECESSARY TO CLEAR DOWELS.

LATERAL GUIDES TO BE POURED AFTER FINAL TENSIONING OF TRANSVERSE STRANDS IN CORED SLAB UNITS.

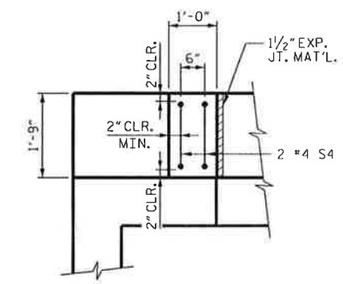

PLAN

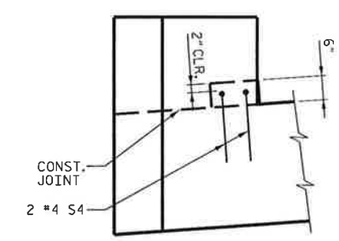

ELEVATION

LATERAL GUIDE DETAIL

NOTE :
DIMENSIONS ARE HORIZONTAL UNLESS OTHERWISE NOTED.

TOP OF PILE ELEVATION	
1	1644.337
2	1644.687
3	1645.037
4	1645.387
5	1645.737
6	1646.087
7	1646.437
8	1646.787
9	1647.137

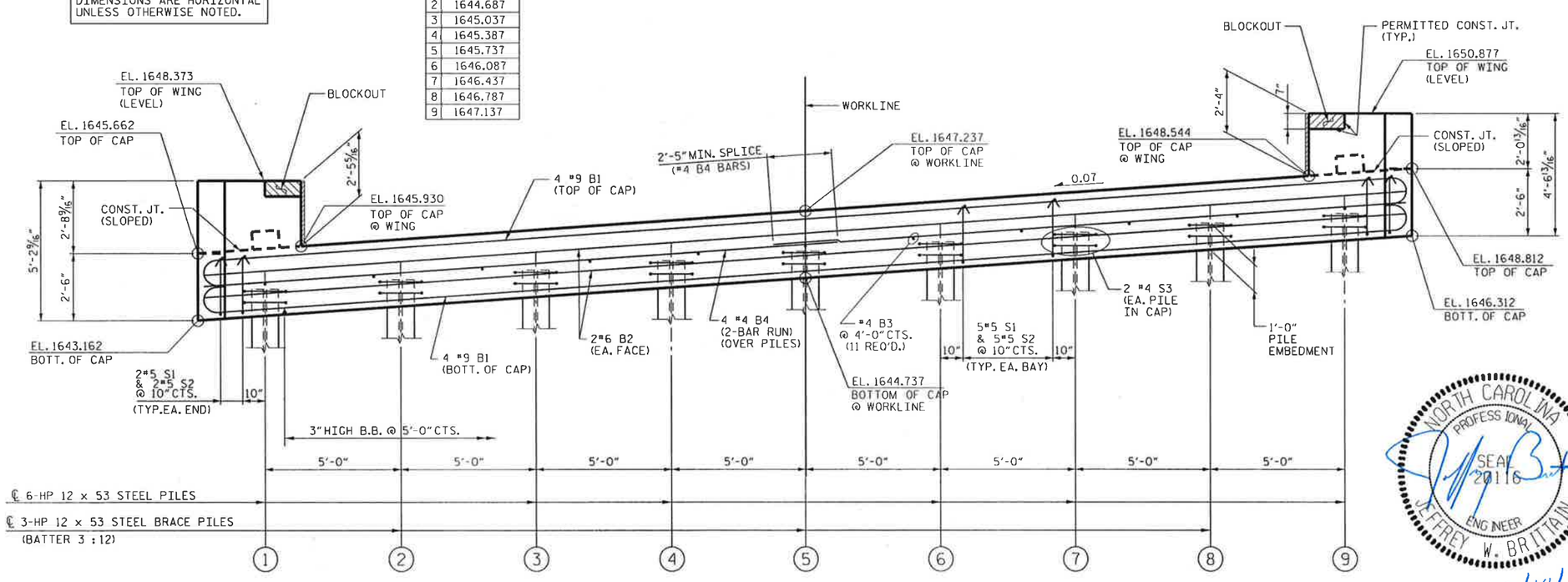

ELEVATION

NORTH CAROLINA PROFESSIONAL SEAL 20116 ENGINEER JEFFREY W. BRITTAIN

2/19/10

PROJECT NO. B-5234
COUNTY: CLAY
STATION: 12 + 43.50-L-
REPLACES BRIDGE NO. 100

STATE OF NORTH CAROLINA
DEPARTMENT OF TRANSPORTATION
RALEIGH

END BENT 1 PLAN AND ELEVATION

REVISIONS						SHEET NO.
NO.	BY	DATE	NO.	BY	DATE	S-7
1			3			TOTAL SHEETS
2			4			15

PREPARED BY
TCS ENGINEERS
107-A MICA AVENUE
MORGANTON, NC 28655

DRAWN BY: JLA DATE: 10/04
CHECKED BY: RTJ DATE: 12/04

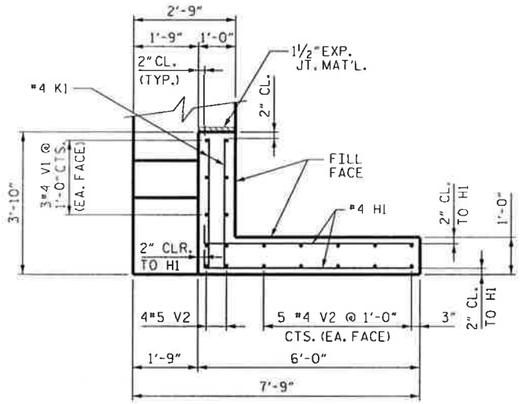

PLAN - WING W1

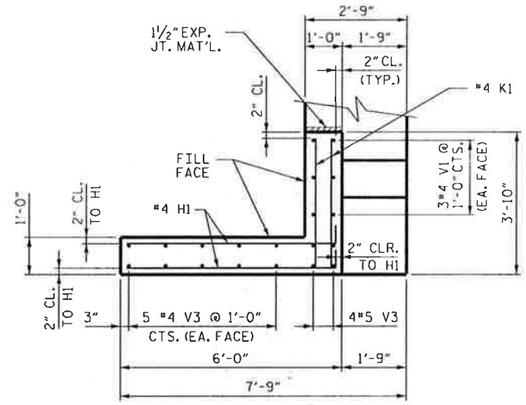

PLAN - WING W2

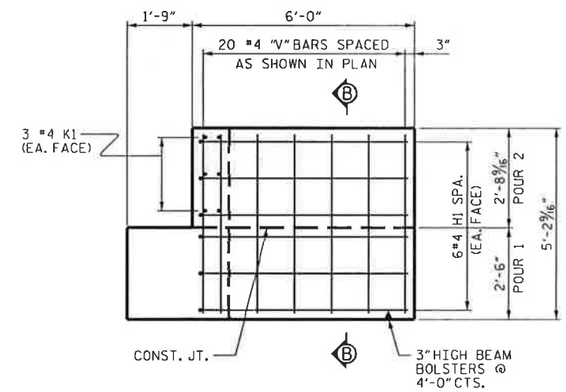

ELEVATION - WING W1

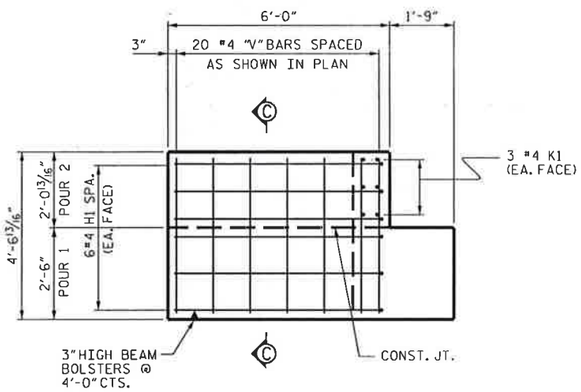

ELEVATION - WING W2

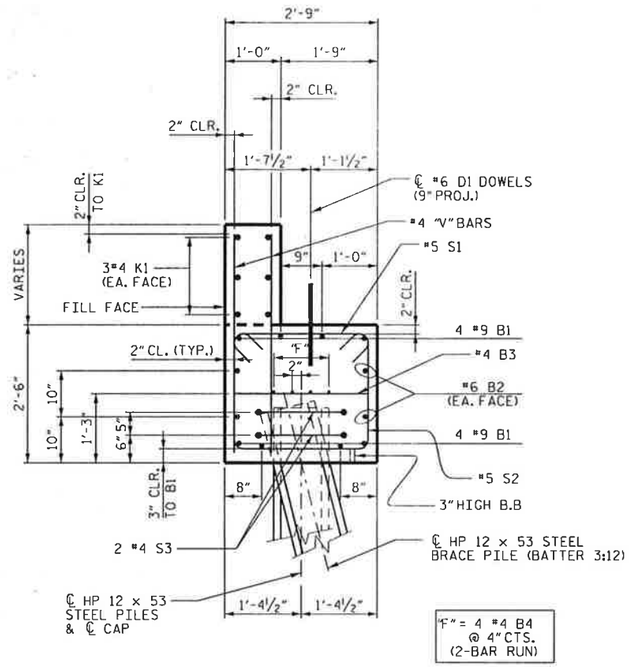

SECTION A-A

NOT TO SCALE

BILL OF MATERIAL					
END BENT1					
BAR	NO.	SIZE	TYPE	LENGTH	WEIGHT
B1	8	#9	1	47'-2"	1283
B2	4	#6	STR	44'-8"	268
B3	11	#4	STR	2'-5"	18
B4	8	#4	STR	23'-7"	126
D1	26	#6	STR	1'-6"	59
H1	24	#4	5	6'-4"	102
K1	12	#4	STR	3'-6"	28
S1	44	#5	2	3'-4"	153
S2	44	#5	3	7'-7"	348
S3	18	#4	4	6'-6"	78
S4	4	#4	6	3'-8"	10
V1	12	#4	STR	4'-0"	32
V2	14	#4	STR	4'-10"	45
V3	14	#4	STR	4'-2"	39
REINFORCING STEEL					2589 LBS.
CLASS A CONCRETE					
POUR 1 CAP & WINGS					12.5 C. Y.
POUR 2 BACKWALL & WINGS					1.6 C. Y.
POUR 2 LATERAL GUIDE					0.1 C. Y.
CLASS A CONCRETE TOTAL					14.2 C. Y.
HP12x53 STL. PILES NO. = 9 L.F. = 180					

BAR TYPES

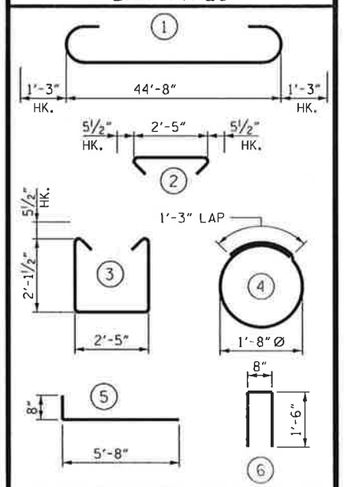

ALL BAR DIMENSIONS ARE OUT TO OUT

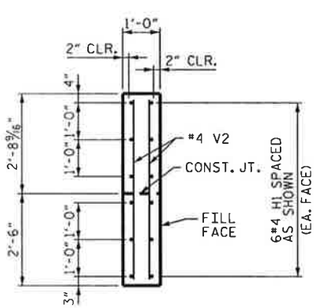

SECTION B-B

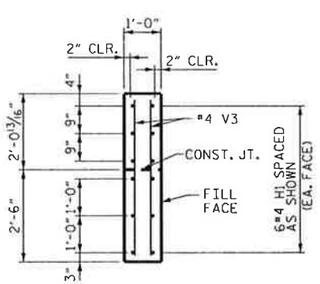

SECTION C-C

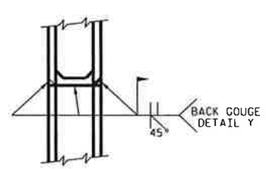

✱ PILE VERTICAL

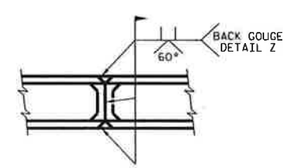

✱ PILE HORIZONTAL OR VERTICAL

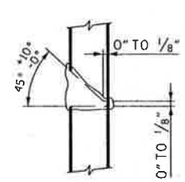

DETAIL Y

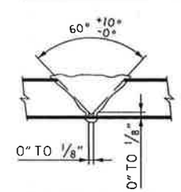

DETAIL Z

✱ POSTION OF PILE DURING WELDING

PILE SPLICE DETAILS

PROJECT NO. B-5234
COUNTY: CLAY
STATION: 12+43.50-L-
REPLACES BRIDGE NO. 100

PREPARED BY
TGS ENGINEERS
107-A MICA AVENUE
MORGANTON, NC 28655

STATE OF NORTH CAROLINA
DEPARTMENT OF TRANSPORTATION
RALEIGH

END BENT 1
DETAILS

REVISIONS						SHEET NO.
NO.	BY	DATE	NO.	BY	DATE	S-8
1			3			TOTAL SHEETS
2			4			15

DRAWN BY: RTJ DATE: 10/04
CHECKED BY: NMW DATE: 12/04

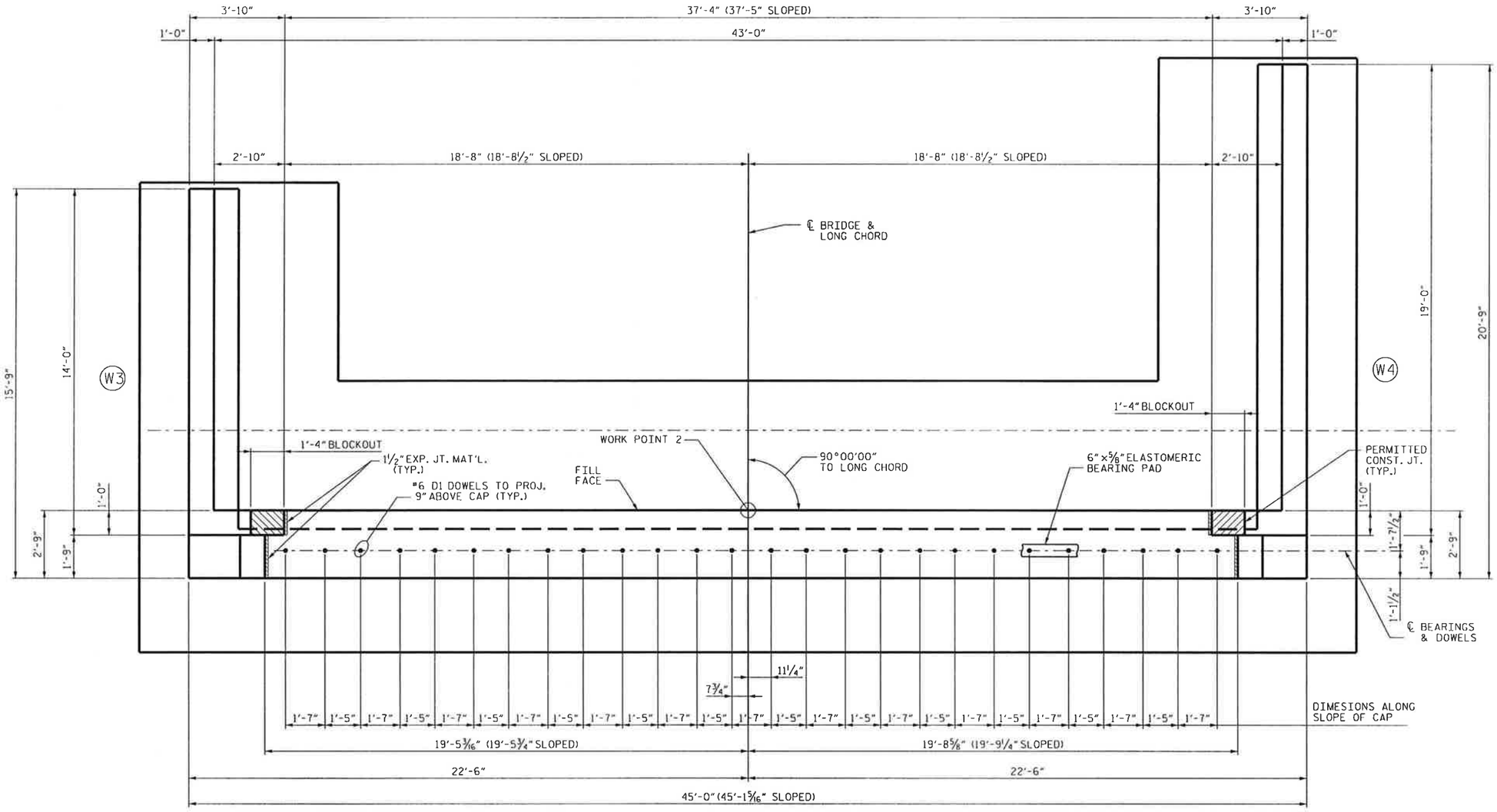

PLAN

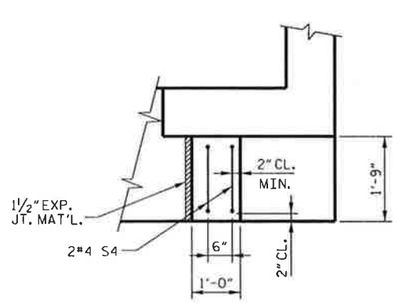

PLAN

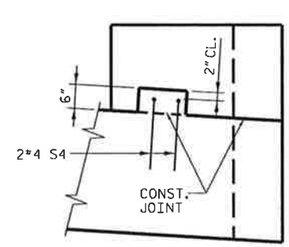

ELEVATION

LATERAL GUIDE DETAIL

NOTE :

PILES IN FOOTING NOT SHOWN FOR CLARITY. SEE FOOTING LAYOUT FOR PILE LOCATIONS.

NORTH CAROLINA PROFESSIONAL SEAL 20116 ENGINEER JEFFREY W. BRITTAIN

2/19/10

PREPARED BY
TCS ENGINEERS
107-A MICA AVENUE
MORGANTON, NC 28655

PROJECT NO. B-5234
COUNTY: CLAY
STATION: 12 + 43.50-L-
REPLACES BRIDGE NO. 100

STATE OF NORTH CAROLINA
DEPARTMENT OF TRANSPORTATION
RALEIGH

ABUTMENT NO. 2
PLAN

REVISIONS						SHEET NO.
NO.	BY	DATE	NO.	BY	DATE	S-9
1			3			TOTAL SHEETS
2			4			15

DRAWN BY:	RTJ	DATE:	10/04
CHECKED BY:	NMW	DATE:	01/05

NOTE :

STIRRUPS IN CAP MAY BE SHIFTED AS NECESSARY TO CLEAR DOWELS.

LATERAL GUIDES TO BE POURED AFTER FINAL TENSIONING OF TRANSVERSE STRANDS IN CORED SLAB UNITS.

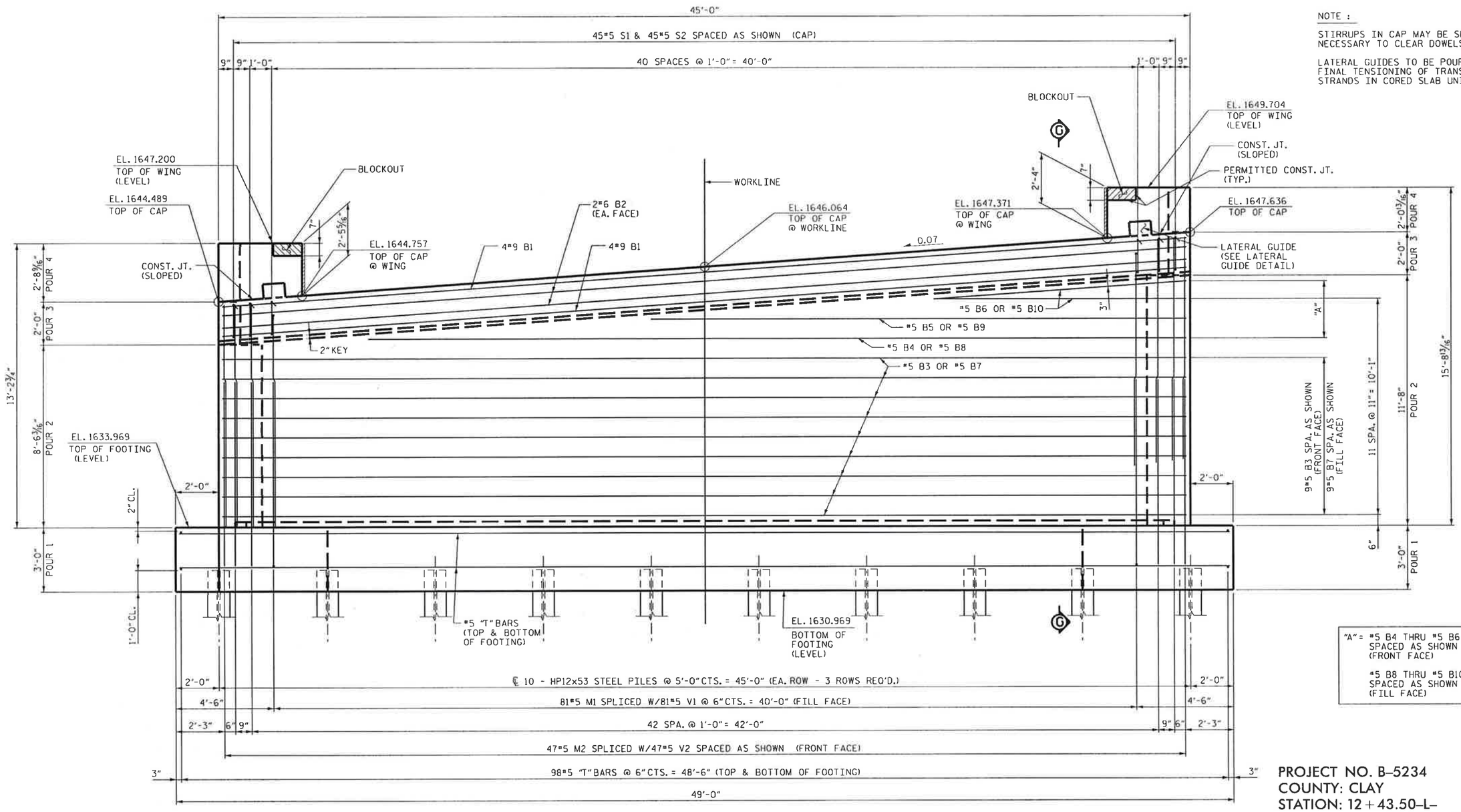

"A" = #5 B4 THRU #5 B6 SPACED AS SHOWN (FRONT FACE)

#5 B8 THRU #5 B10 SPACED AS SHOWN (FILL FACE)

ELEVATION

FOR PILES AND REINFORCING STEEL IN THE FOOTING, SEE THE FOOTING PLAN.

PROJECT NO. B-5234
COUNTY: CLAY
STATION: 12 + 43.50-L-
REPLACES BRIDGE NO. 100

NORTH CAROLINA PROFESSIONAL SEAL 20116 ENGINEER JEFFREY W. BRITTAIN

2/19/10

PREPARED BY
TCS ENGINEERS
107-A MICA AVENUE
MORGANTON, NC 28655

STATE OF NORTH CAROLINA
DEPARTMENT OF TRANSPORTATION
RALEIGH

ABUTMENT NO. 2
ELEVATION

REVISIONS						SHEET NO.
NO.	BY	DATE	NO.	BY	DATE	S-10
1			3			TOTAL SHEETS
2			4			15

DRAWN BY: RTJ DATE: 10/04
CHECKED BY: NMW DATE: 01/05

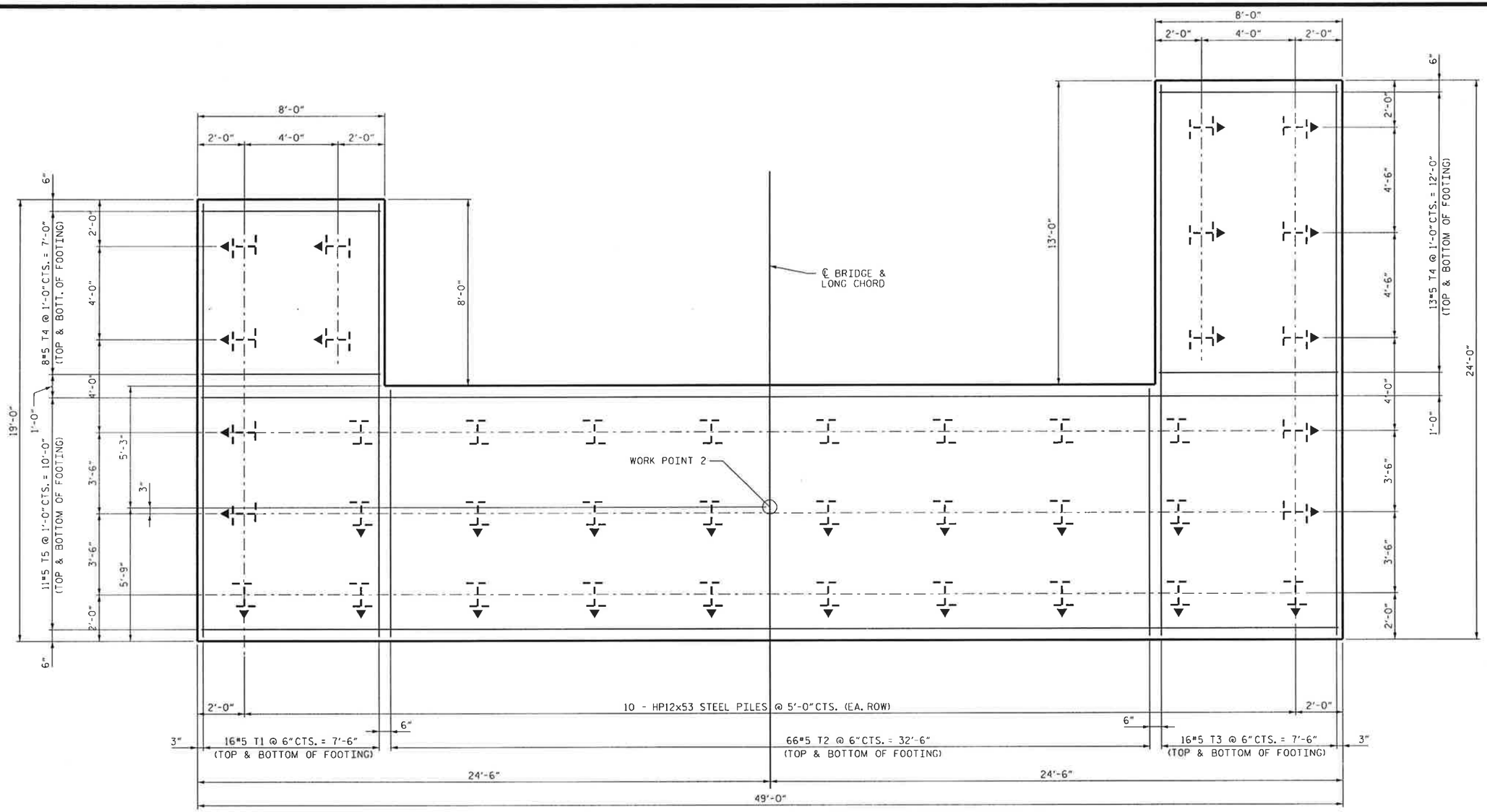

PLAN OF ABUTMENT 2 FOOTING

INDICATES PILE
BATTER 3 : 12 IN
▼ DIRECTION SHOWN

2/18/10

PREPARED BY
TGS ENGINEERS
107-A MICA AVENUE
MORGANTON, NC 28655

PROJECT NO. B-5234
COUNTY: CLAY
STATION: 12 + 43.50-L-
REPLACES BRIDGE NO. 100

STATE OF NORTH CAROLINA
DEPARTMENT OF TRANSPORTATION
RALEIGH

ABUTMENT NO. 2
FOUNDATION PLAN

REVISIONS						SHEET NO.
NO.	BY	DATE	NO.	BY	DATE	S-11
1			3			TOTAL SHEETS
2			4			15

DRAWN BY: RTJ DATE: 10/04
CHECKED BY: NMW DATE: 01/05

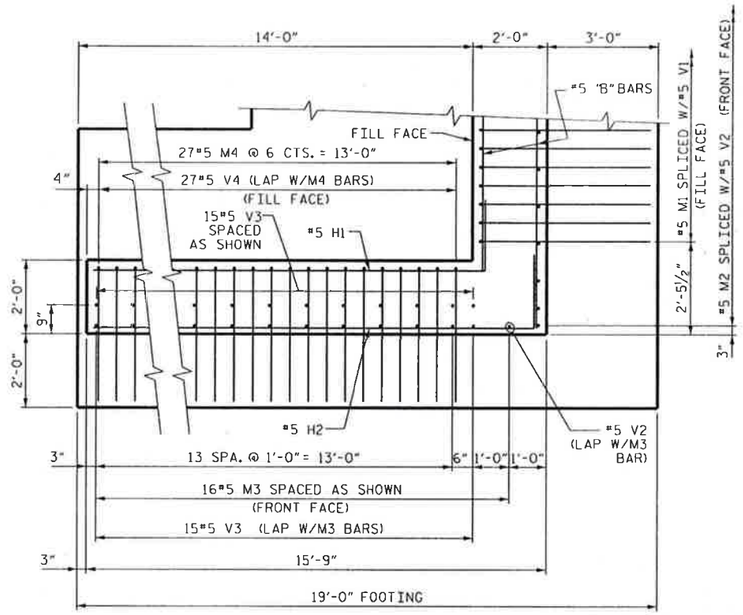

SECTION A-A
WING W3
(POURS 1 & 2)

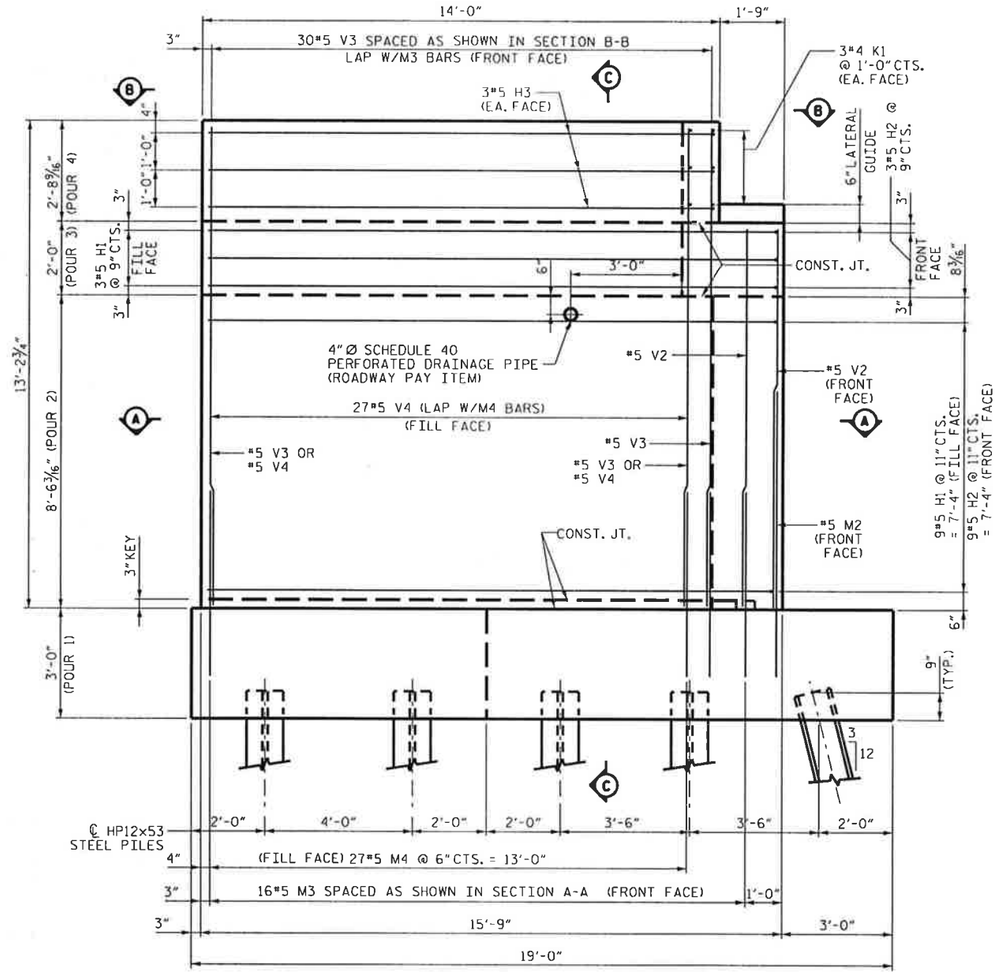

ELEVATION OF WING W3

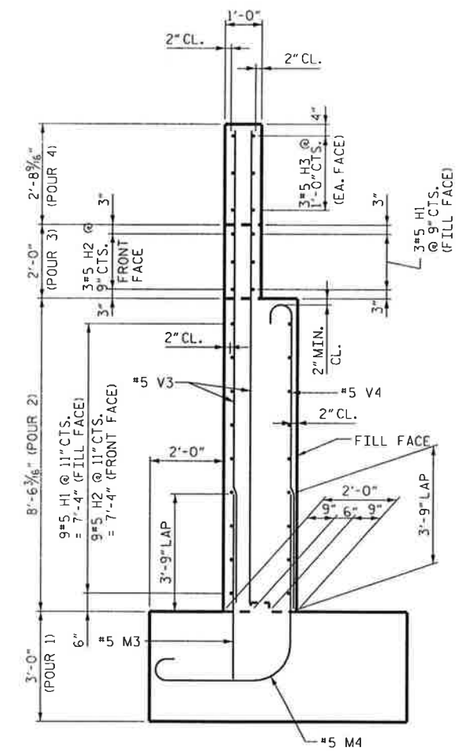

SECTION C-C

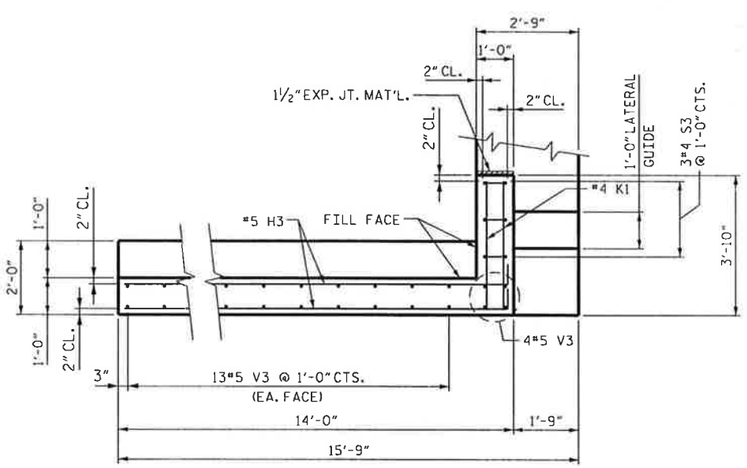

SECTION B-B
WING W3
(POURS 3 & 4)

PROJECT NO. B-5234
COUNTY: CLAY
STATION: 12 + 43.50-L-
REPLACES BRIDGE NO. 100

NORTH CAROLINA PROFESSIONAL SEAL 20116 ENGINEER JEFFREY W. BRITTAIN

2/19/10

PREPARED BY
TCS ENGINEERS
107-A MICA AVENUE
MORGANTON, NC 28655

STATE OF NORTH CAROLINA
DEPARTMENT OF TRANSPORTATION
RALEIGH

ABUTMENT NO. 2
WING W3 DETAILS

REVISIONS						SHEET NO.
NO.	BY	DATE	NO.	BY	DATE	S-12
1			3			TOTAL SHEETS
2			4			15

DRAWN BY: RTJ DATE: 10/04
CHECKED BY: NMW DATE: 01/05

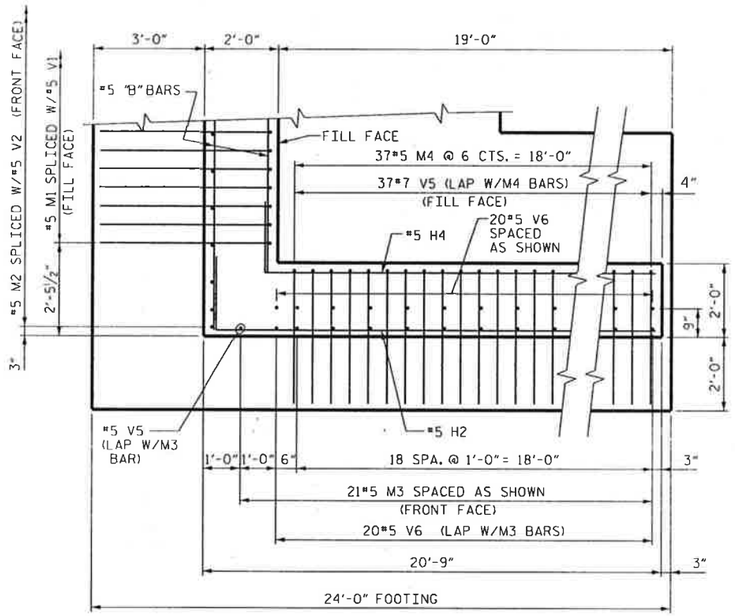

SECTION D-D
WING W4
(POURS 1 & 2)

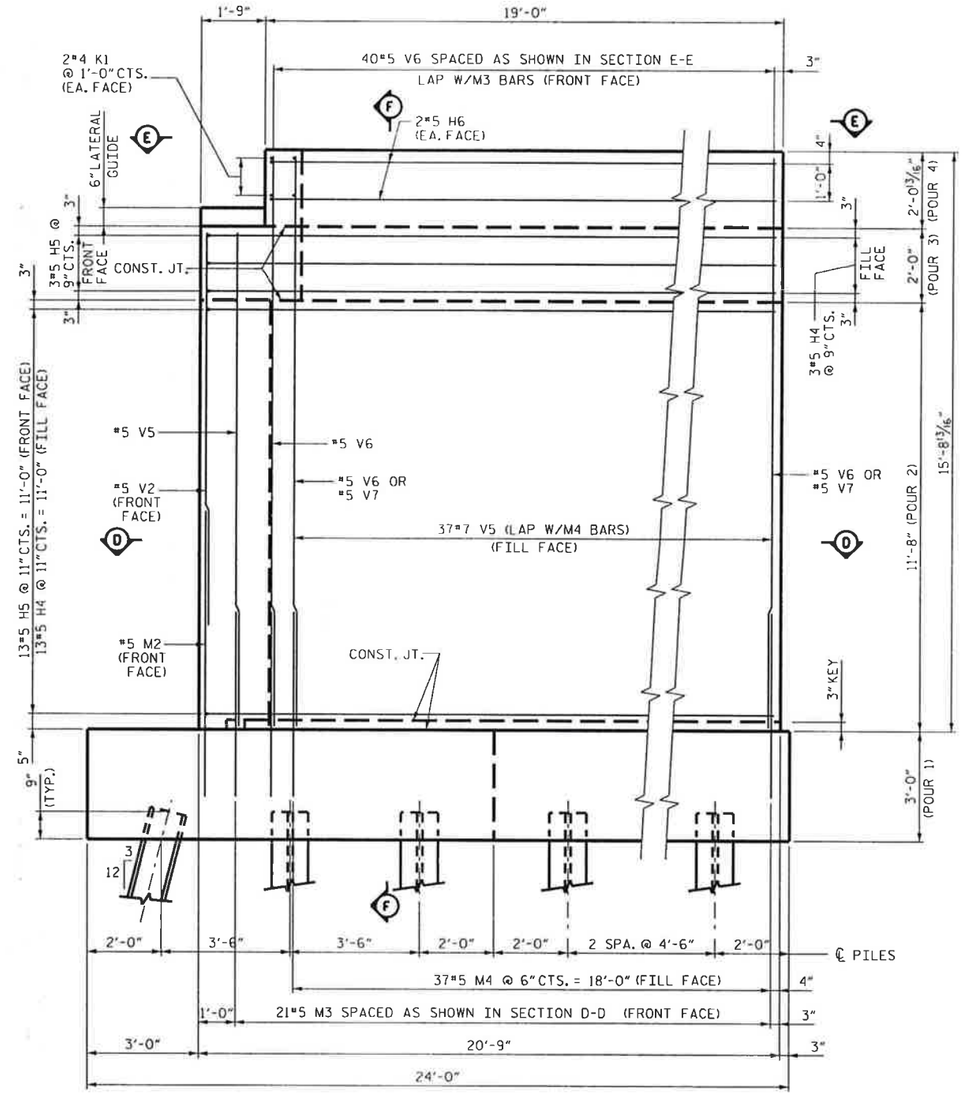

ELEVATION OF WING W4

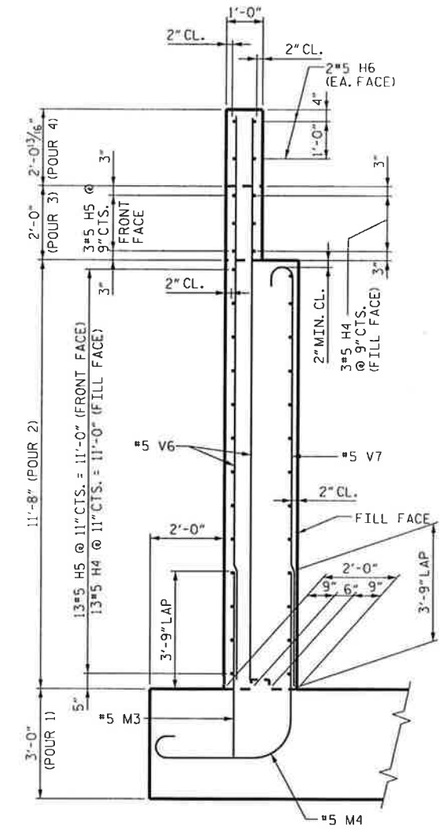

SECTION F-F

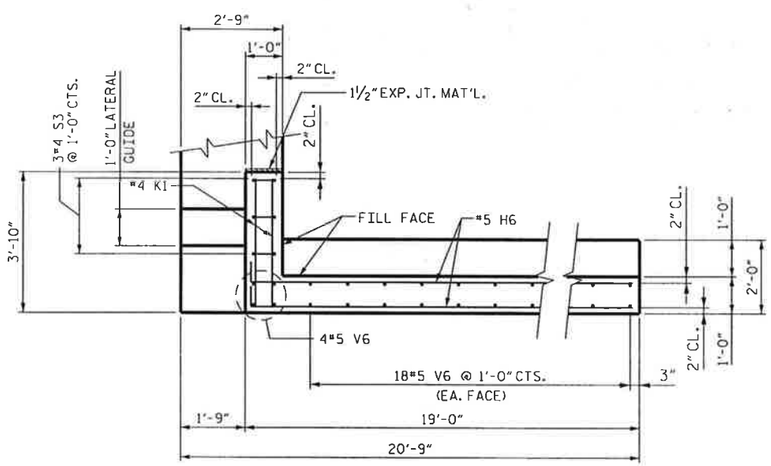

SECTION E-E
WING W4
(POURS 3 & 4)

DRAWN BY: RTJ DATE: 10/04
CHECKED BY: NMW DATE: 01/05

NORTH CAROLINA PROFESSIONAL SEAL 20118 ENGINEER JEFFREY W. BRITTAIN
2/18/10

PREPARED BY
TGS ENGINEERS
107-A MICA AVENUE
MORGANTON, NC 28655

PROJECT NO. B-5234
COUNTY: CLAY
STATION: 12+43.50-L-
REPLACES BRIDGE NO. 100

STATE OF NORTH CAROLINA
DEPARTMENT OF TRANSPORTATION
RALEIGH

ABUTMENT NO. 2
WING W4 DETAILS

REVISIONS						SHEET NO.
NO.	BY	DATE	NO.	BY	DATE	S-13
1			3			TOTAL SHEETS
2			4			15

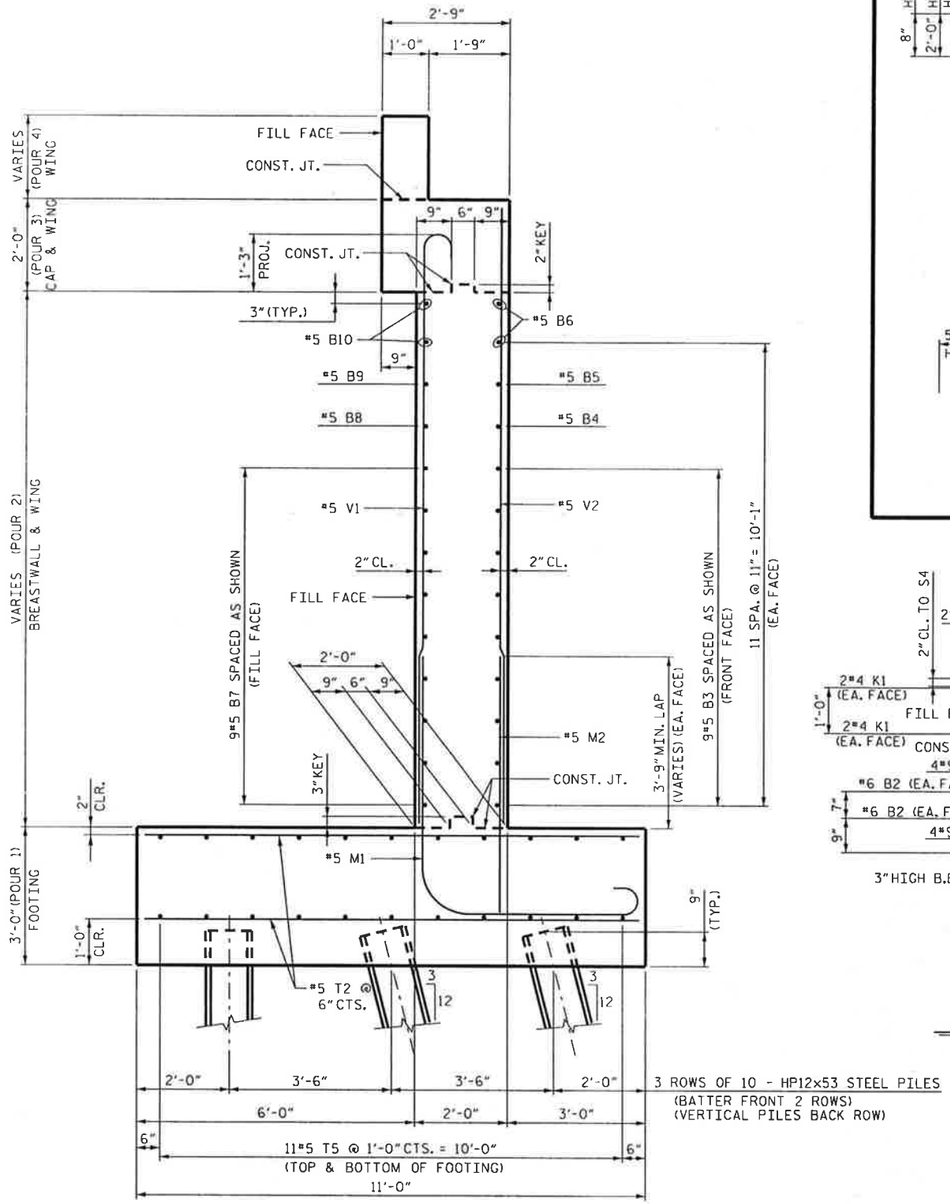

3 ROWS OF 10 - HP12x53 STEEL PILES
(BATTER FRONT 2 ROWS)
(VERTICAL PILES BACK ROW)

SECTION G-G

BAR TYPES

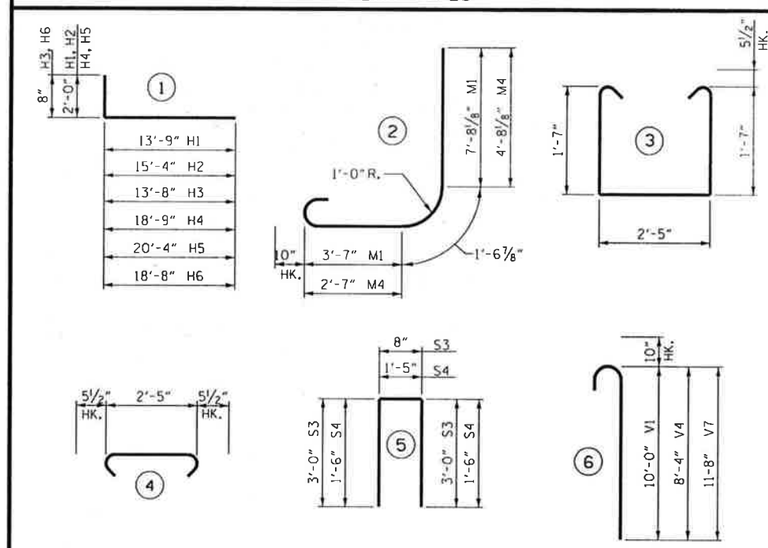

BAR DIMENSIONS ARE OUT TO OUT.

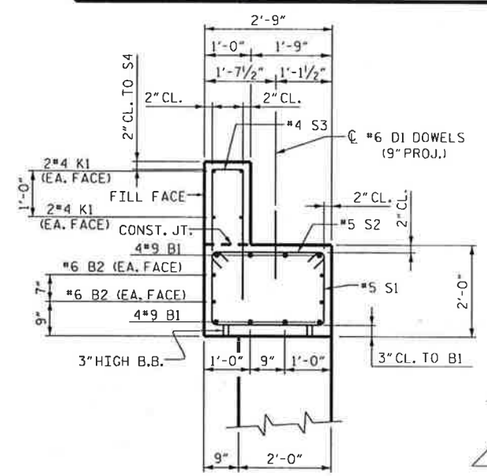

SECTION THRU CAP

BILL OF MATERIAL

ABUTMENT 2

BAR	NO.	SIZE	TYPE	LENGTH	WEIGHT	BAR	NO.	SIZE	TYPE	LENGTH	WEIGHT
B1	8	#9	STR.	44'-9"	1,217	M1	81	#5	2	13'-8"	1,155
B2	4	#6	STR.	44'-9"	269	M2	47	#5	STR.	8'-9"	429
B3	9	#5	STR.	44'-8"	419	M3	34	#5	STR.	5'-9"	222
B4	1	#5	STR.	37'-11"	40	M4	64	#5	2	9'-8"	645
B5	1	#5	STR.	24'-9"	26						
B6	2	#5	STR.	11'-8"	24	S1	45	#5	3	6'-6"	305
B7	9	#5	STR.	41'-4"	388	S2	45	#5	4	3'-4"	156
B8	1	#5	STR.	36'-3"	38	S3	6	#4	5	6'-8"	27
B9	1	#5	STR.	23'-1"	24	S4	4	#4	5	4'-5"	12
B10	2	#5	STR.	10'-0"	21						
						T1	32	#5	STR.	18'-6"	617
D1	26	#6	STR.	1'-6"	59	T2	132	#5	STR.	10'-6"	1,446
						T3	32	#5	STR.	23'-6"	784
H1	12	#5	1	15'-9"	197	T4	42	#5	STR.	7'-6"	328
H2	12	#5	1	17'-4"	217	T5	22	#5	STR.	48'-6"	1,113
H3	6	#5	1	14'-4"	90						
H4	16	#5	1	20'-9"	346						
H5	16	#5	1	22'-4"	373	V1	81	#5	6	10'-10"	915
H6	4	#5	1	19'-4"	81	V2	48	#5	STR.	10'-3"	513
						V3	30	#5	STR.	13'-0"	407
K1	10	#4	STR.	3'-6"	23	V4	27	#5	6	9'-2"	258
						V5	1	#5	STR.	12'-5"	13
						V6	40	#5	STR.	15'-6"	647
						V7	37	#5	6	12'-6"	482

REINFORCING STEEL 14,326 LBS.

CLASS A CONCRETE	
POUR 1 (FOOTING)	78.6 C.Y.
POUR 2 (BREASTWALL & WINGS)	58.5 C.Y.
POUR 3 (CAP & WINGS)	11.5 C.Y.
POUR 4 (WINGS)	3.4 C.Y.
POUR 5 (LATERAL GUIDES)	0.1 C.Y.
TOTAL - CLASS A CONCRETE	152.1 C.Y.

HP12x53 STEEL PILES	
NO. = 40	LIN. FT. = 400

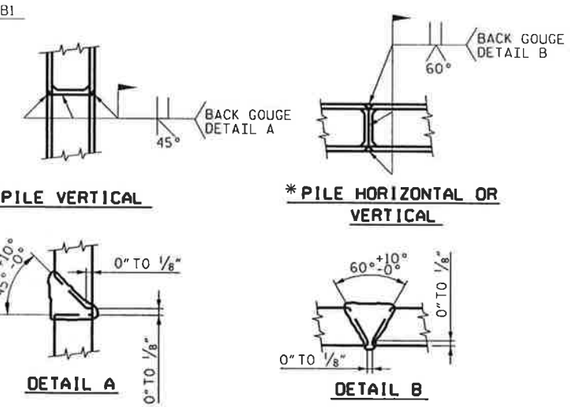

*POSITION OF PILE DURING WELDING

PILE SPLICE DETAILS

NORTH CAROLINA PROFESSIONAL SEAL 20116 ENGINEER JEFFREY W. BRITTAIN

2/18/10

PROJECT NO. B-5234
COUNTY: CLAY
STATION: 12 + 43.50-L-
REPLACES BRIDGE NO. 100

STATE OF NORTH CAROLINA
DEPARTMENT OF TRANSPORTATION
RALEIGH

ABUTMENT NO. 2
BILL OF MATERIAL
& DETAILS

PREPARED BY
TCS ENGINEERS
107-A MICA AVENUE
MORGANTON, NC 28655

REVISIONS						SHEET NO.
NO.	BY	DATE	NO.	BY	DATE	S-14
1			3			TOTAL SHEETS
2			4			15

DRAWN BY: RTJ DATE: 11/04
CHECKED BY: NMW DATE: 01/05

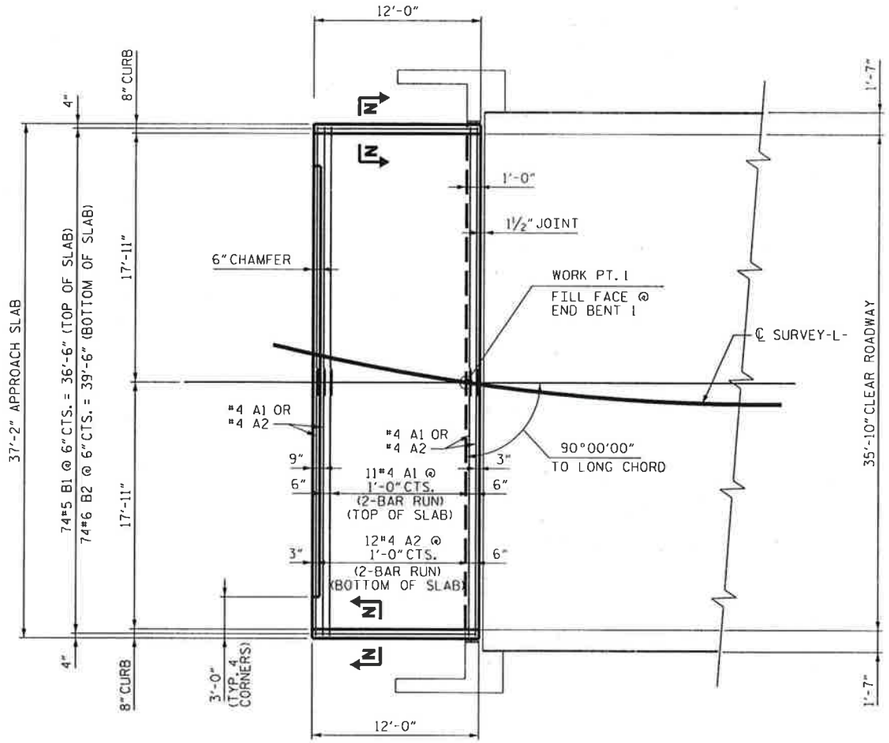

PLAN

BEGIN APPROACH SLAB SHOWN;
END APPROACH SLAB SIMILAR.

SPLICE LENGTHS FOR
APPROACH SLAB

#4 UNCOATED - 1'-9"
#4 EPOXY COATED - 2'-0"

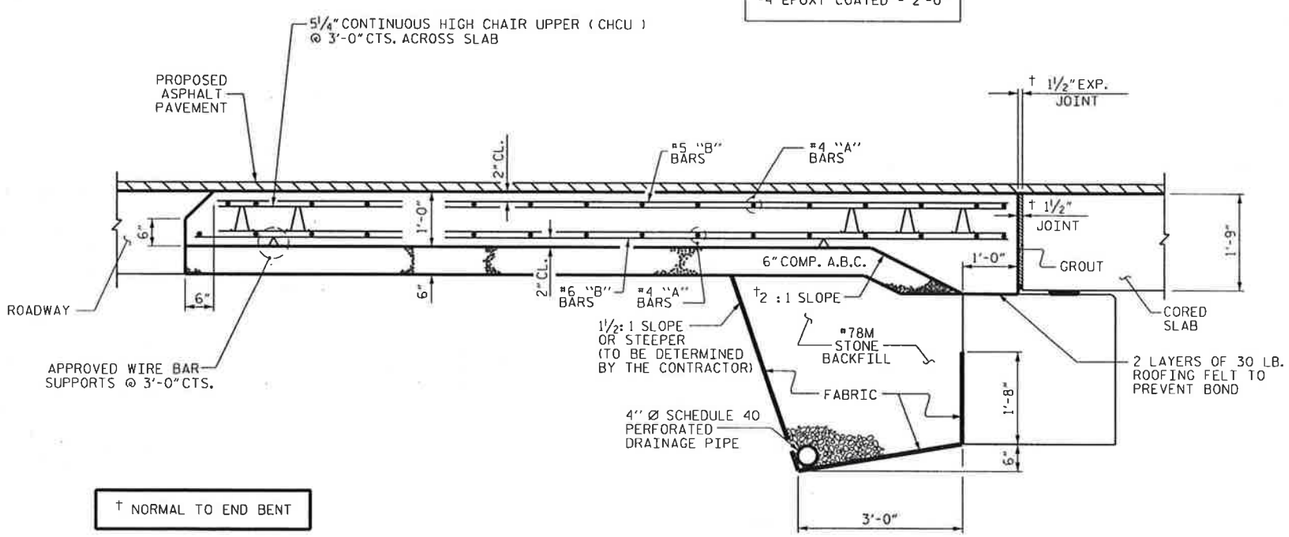

† NORMAL TO END BENT

SECTION THRU SLAB

NOTES

FOR BRIDGE APPROACH FILL INCLUDING FABRIC, 4" Ø DRAINAGE PIPE, AND #78M STONE BACKFILL, SEE ROADWAY PLANS.

APPROACH SLAB SHALL NOT BE CONSTRUCTED PRIOR TO COMPLETION OF THE BRIDGE DECK.

FABRIC SHALL BE TYPE I ENGINEERING FABRIC IN ACCORDANCE WITH THE STANDARD SPECIFICATIONS SECTION 1056.

#78M STONE BACKFILL (CLASS V SELECT MATERIAL) SHALL BE IN ACCORDANCE WITH STANDARD SPECIFICATIONS SECTION 1016.

#78M STONE BACKFILL IS TO BE CONTINUOUS ALONG FILL FACE OF BACKWALL FROM OUTSIDE EDGE TO OUTSIDE EDGE OF APPROACH SLAB.

FOR THE 4" Ø DRAINAGE PIPE OUTLET(S), SEE ROADWAY PLANS.

AREA BETWEEN THE WINGWALL AND APPROACH SLAB SHALL BE GRADED TO DRAIN THE WATER AWAY FROM THE FILL FACE OF THE BRIDGE AND SHALL BE PAVED. SEE ROADWAY PLANS.

THE 6" COMP. A.B.C. SHALL BE FLUSH WITH THE ROADWAY END OF THE APPROACH SLAB AND SHALL EXTEND 1'-0" OUTSIDE OF EACH EDGE OF THE APPROACH SLAB.

THE CONTRACTOR MAY USE 4" TYPE B-25.0B ASPHALT CONCRETE BASE COURSE IN LIEU OF 6" COMP. A.B.C. IF THIS OPTION IS USED, THE BASE COURSE SHALL BE FLUSH WITH THE ROADWAY END OF THE APPROACH SLAB, AND THE WIDTH SHALL BE THE SAME AS THAT OF THE APPROACH SLAB.

THE CONTRACTOR MAY USE 5" CLASS "A" CONCRETE BASE IN LIEU OF 6" COMP. A.B.C. IF THIS OPTION IS USED, THE CONCRETE BASE SHALL BE FLUSH WITH THE ROADWAY END OF THE APPROACH SLAB, AND THE WIDTH SHALL BE THE SAME AS THAT OF THE APPROACH SLAB. THE CONCRETE SHALL BE FINISHED TO A SMOOTH SURFACE AND A LAYER OF 30 LB ROOFING FELT SHALL BE PLACED BETWEEN THE CONCRETE BASE AND THE APPROACH SLAB TO PREVENT BOND. THE APPROACH SLAB SHALL NOT BE CAST UNTIL THE CONCRETE BASE HAS REACHED AN AGE OF THREE CURING DAYS.

FOR JOINT DETAILS, SEE "PRESTRESSED CONCRETE CORED SLAB UNIT" SHEETS.

THE JOINT AT THE END BENT SHALL BE GROUTED AS SOON AS PRACTICAL AFTER THE CONSTRUCTION OF THE APPROACH SLABS.

APPROACH SLAB GROOVING IS NOT REQUIRED.

BILL OF MATERIAL

APPROACH SLAB AT EB #1

BAR	NO.	SIZE	TYPE	LENGTH	WEIGHT
* A1	26	#4	STR	19'-5"	337
A2	26	#4	STR	19'-4"	336
* B1	74	#5	STR	11'-2"	862
B2	74	#6	STR	11'-8"	1,297
REINFORCING STEEL				LBS.	1,633
* EPOXY COATED REINFORCING STEEL				LBS.	1,199
CLASS AA CONCRETE				C. Y.	18.6

APPROACH SLAB AT ABUT. #2

BAR	NO.	SIZE	TYPE	LENGTH	WEIGHT
* A1	26	#4	STR	19'-5"	337
A2	26	#4	STR	19'-4"	336
* B1	74	#5	STR	11'-2"	862
B2	74	#6	STR	11'-8"	1,297
REINFORCING STEEL				LBS.	1,633
* EPOXY COATED REINFORCING STEEL				LBS.	1,199
CLASS AA CONCRETE				C. Y.	18.6

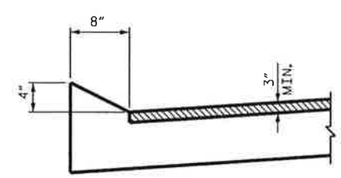

SECTION N-N

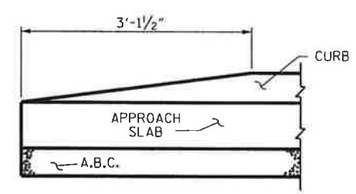

END OF CURB WITHOUT
SHOULDER BERM GUTTER

CURB DETAILS

NORTH CAROLINA PROFESSIONAL SEAL 20116 ENGINEER JEFFREY W. BRITTAIN

2/19/10

PROJECT NO. B-5234
COUNTY: CLAY
STATION: 12 + 43.50-L-
REPLACES BRIDGE NO. 100

STATE OF NORTH CAROLINA
DEPARTMENT OF TRANSPORTATION
RALEIGH

APPROACH SLAB AT END BENT 1 AND ABUTMENT 2

PREPARED BY
TCS ENGINEERS
107-A MICA AVENUE
MORGANTON, NC 28655

REVISIONS						SHEET NO.
NO.	BY	DATE	NO.	BY	DATE	S-15
1			3			TOTAL SHEETS
2			4			15

DRAWN BY: JLA/RTJ DATE: 9/04
CHECKED BY: NMW DATE: 11/04