CONTRACT # DO0041 BRUNSWICK #59 B-5217

STRUCTURE

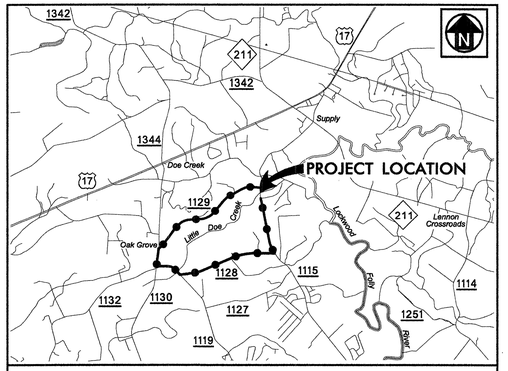

VICINITY MAP
(NOT TO SCALE)

DETOUR ROUTE

STATE OF NORTH CAROLINA
DIVISION OF HIGHWAYS

BRUNSWICK COUNTY

STATE	STATE PROJECT REFERENCE NO.	SHEET NO.	TOTAL SHEETS
N.C.	B-5217	1	37

STATE PROJECT NO.	F.A. PROJ. NO.	DESCRIPTION
42814	NA	P.E.

LOCATION: BRIDGE NO. 59 OVER LITTLE DOE CREEK

TYPE OF WORK: GRADING, DRAINAGE, PAVING AND STRUCTURE

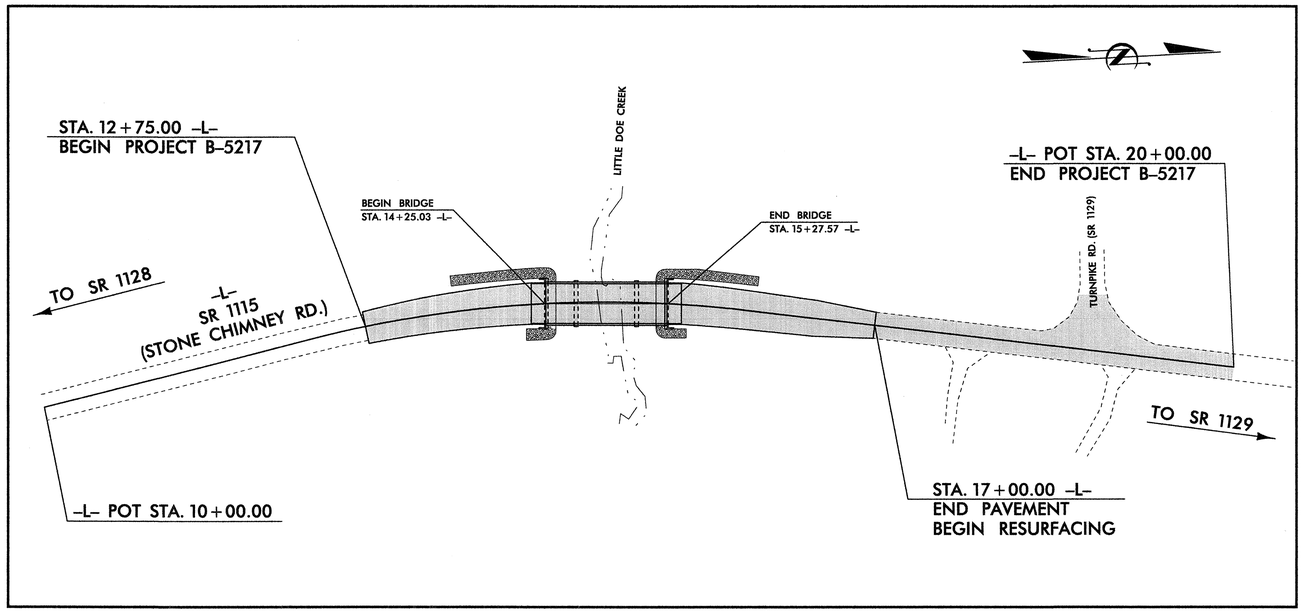

LOCATION SKETCH
(NOT TO SCALE)

THIS PROJECT IS NOT WITHIN ANY MUNICIPAL BOUNDARIES

MULKEY
ENGINEERS & CONSULTANTS
PO Box 33127
Raleigh, N.C. 27636
(919) 851-1912
(919) 851-1918 (FAX)
WWW.MULKEYINC.COM

DESIGN DATA

ADT 2005 = 2400

FUNCTIONAL CLASS = LR / NONFA

PROJECT LENGTH

LENGTH ROADWAY PROJECT B-5217 = 0.118 MILE

LENGTH STRUCTURE PROJECT B-5217 = 0.019 MILE

TOTAL LENGTH PROJECT B-5217 = 0.137 MILE

Prepared In the Office of:
Mulkey Engineers & Consultants
FOR THE NORTH CAROLINA DEPARTMENT OF TRANSPORTATION

2006 STANDARD SPECIFICATIONS

LETTING DATE:
JUNE 24, 2010

L. KEVIN AUSTIN, PE
MULKEY E & C
STRUCTURES ENGINEER

NCDOT CONTACT: MIKE SUMMERS
BRIDGE MAINTENANCE - PROJECT MANAGER

STRUCTURES ENGINEER

NORTH CAROLINA PROFESSIONAL SEAL 19661 ENGINEER L. KEVIN AUSTIN 5/11/10

L. Kevin Austin PE
SIGNATURE:

DIVISION OF HIGHWAYS
STATE OF NORTH CAROLINA

PE
STATE HIGHWAY ENGINEER - DESIGN

DEPARTMENT OF TRANSPORTATION
FEDERAL HIGHWAY ADMINISTRATION

APPROVED FOR
DIVISION ADMINISTRATOR DATE

5/12/2010 1:46:46 PM
R:\Structures\B5217_SD_TSH.dgn

3/15/06

PROJECT REFERENCE NO.	SHEET NO.
B-5217	1-A

Note: Not to Scale

****S.U.E. = Subsurface Utility Engineering***

STATE OF NORTH CAROLINA
DIVISION OF HIGHWAYS

CONVENTIONAL PLAN SHEET SYMBOLS

BOUNDARIES AND PROPERTY:

- State Line
- County Line
- Township Line
- City Line
- Reservation Line
- Property Line
- Existing Iron Pin — EIP
- Property Corner
- Property Monument — ECM
- Parcel/Sequence Number — 123
- Existing Fence Line
- Proposed Woven Wire Fence
- Proposed Chain Link Fence
- Proposed Barbed Wire Fence
- Existing Wetland Boundary — WLB
- Proposed Wetland Boundary — WLB
- Existing Endangered Animal Boundary — EAB
- Existing Endangered Plant Boundary — EPB

BUILDINGS AND OTHER CULTURE:

- Gas Pump Vent or U/G Tank Cap — GPV
- Sign — S
- Well — W
- Small Mine
- Foundation
- Area Outline
- Cemetery
- Building
- School
- Church
- Dam

HYDROLOGY:

- Stream or Body of Water
- Hydro, Pool or Reservoir
- Jurisdictional Stream — JS
- Buffer Zone 1 — BZ 1
- Buffer Zone 2 — BZ 2
- Flow Arrow
- Disappearing Stream
- Spring
- Wetland
- Proposed Lateral, Tail, Head Ditch — FLOW
- False Sump

RAILROADS:

- Standard Gauge — CSX TRANSPORTATION
- RR Signal Milepost — MILEPOST 35
- Switch — SWITCH
- RR Abandoned
- RR Dismantled

RIGHT OF WAY:

- Baseline Control Point
- Existing Right of Way Marker
- Existing Right of Way Line
- Proposed Right of Way Line — RW
- Proposed Right of Way Line with Iron Pin and Cap Marker — RW
- Proposed Right of Way Line with Concrete or Granite Marker — RW
- Existing Control of Access — CA
- Proposed Control of Access — CA
- Existing Easement Line — E
- Proposed Temporary Construction Easement — E
- Proposed Temporary Drainage Easement — TDE
- Proposed Permanent Drainage Easement — PDE
- Proposed Permanent Utility Easement — PUE

ROADS AND RELATED FEATURES:

- Existing Edge of Pavement
- Existing Curb
- Proposed Slope Stakes Cut — C
- Proposed Slope Stakes Fill — F
- Proposed Wheel Chair Ramp — WCR
- Existing Metal Guardrail
- Proposed Guardrail
- Existing Cable Guiderail
- Proposed Cable Guiderail
- Equality Symbol
- Pavement Removal

VEGETATION:

- Single Tree
- Single Shrub
- Hedge
- Woods Line
- Orchard
- Vineyard — Vineyard

EXISTING STRUCTURES:

MAJOR:

- Bridge, Tunnel or Box Culvert — CONC
- Bridge Wing Wall, Head Wall and End Wall — CONC WW

MINOR:

- Head and End Wall — CONC HW
- Pipe Culvert
- Footbridge
- Drainage Box: Catch Basin, DI or JB — CB
- Paved Ditch Gutter
- Storm Sewer Manhole — S
- Storm Sewer — S

UTILITIES:

POWER:

- Existing Power Pole
- Proposed Power Pole
- Existing Joint Use Pole
- Proposed Joint Use Pole
- Power Manhole — P
- Power Line Tower
- Power Transformer
- U/G Power Cable Hand Hole — HH
- H-Frame Pole
- Recorded U/G Power Line — P
- Designated U/G Power Line (S.U.E.*) — P

TELEPHONE:

- Existing Telephone Pole
- Proposed Telephone Pole
- Telephone Manhole — T
- Telephone Booth
- Telephone Pedestal — T
- Telephone Cell Tower
- U/G Telephone Cable Hand Hole — HH
- Recorded U/G Telephone Cable — T
- Designated U/G Telephone Cable (S.U.E.*) — T
- Recorded U/G Telephone Conduit — TC
- Designated U/G Telephone Conduit (S.U.E.*) — TC
- Recorded U/G Fiber Optics Cable — T FO
- Designated U/G Fiber Optics Cable (S.U.E.*) — T FO

WATER:

- Water Manhole — W
- Water Meter
- Water Valve
- Water Hydrant
- Recorded U/G Water Line — W
- Designated U/G Water Line (S.U.E.*) — W
- Above Ground Water Line — A/G Water

TV:

- TV Satellite Dish
- TV Pedestal — C
- TV Tower
- U/G TV Cable Hand Hole — HH
- Recorded U/G TV Cable — TV
- Designated U/G TV Cable (S.U.E.*) — TV
- Recorded U/G Fiber Optic Cable — TV FO
- Designated U/G Fiber Optic Cable (S.U.E.*) — TV FO

GAS:

- Gas Valve
- Gas Meter
- Recorded U/G Gas Line — G
- Designated U/G Gas Line (S.U.E.*) — G
- Above Ground Gas Line — A/G Gas

SANITARY SEWER:

- Sanitary Sewer Manhole
- Sanitary Sewer Cleanout
- U/G Sanitary Sewer Line — SS
- Above Ground Sanitary Sewer — A/G Sanitary Sewer
- Recorded SS Forced Main Line — FSS
- Designated SS Forced Main Line (S.U.E.*) — FSS

MISCELLANEOUS:

- Utility Pole
- Utility Pole with Base
- Utility Located Object
- Utility Traffic Signal Box — S
- Utility Unknown U/G Line — ?UTL
- U/G Tank; Water, Gas, Oil
- A/G Tank; Water, Gas, Oil
- U/G Test Hole (S.U.E.*)
- Abandoned According to Utility Records — AATUR
- End of Information — E.O.I.

5/10/2010
C:\Projects\Figures\B5217_SYMB SHEET.dgn
23523-PW

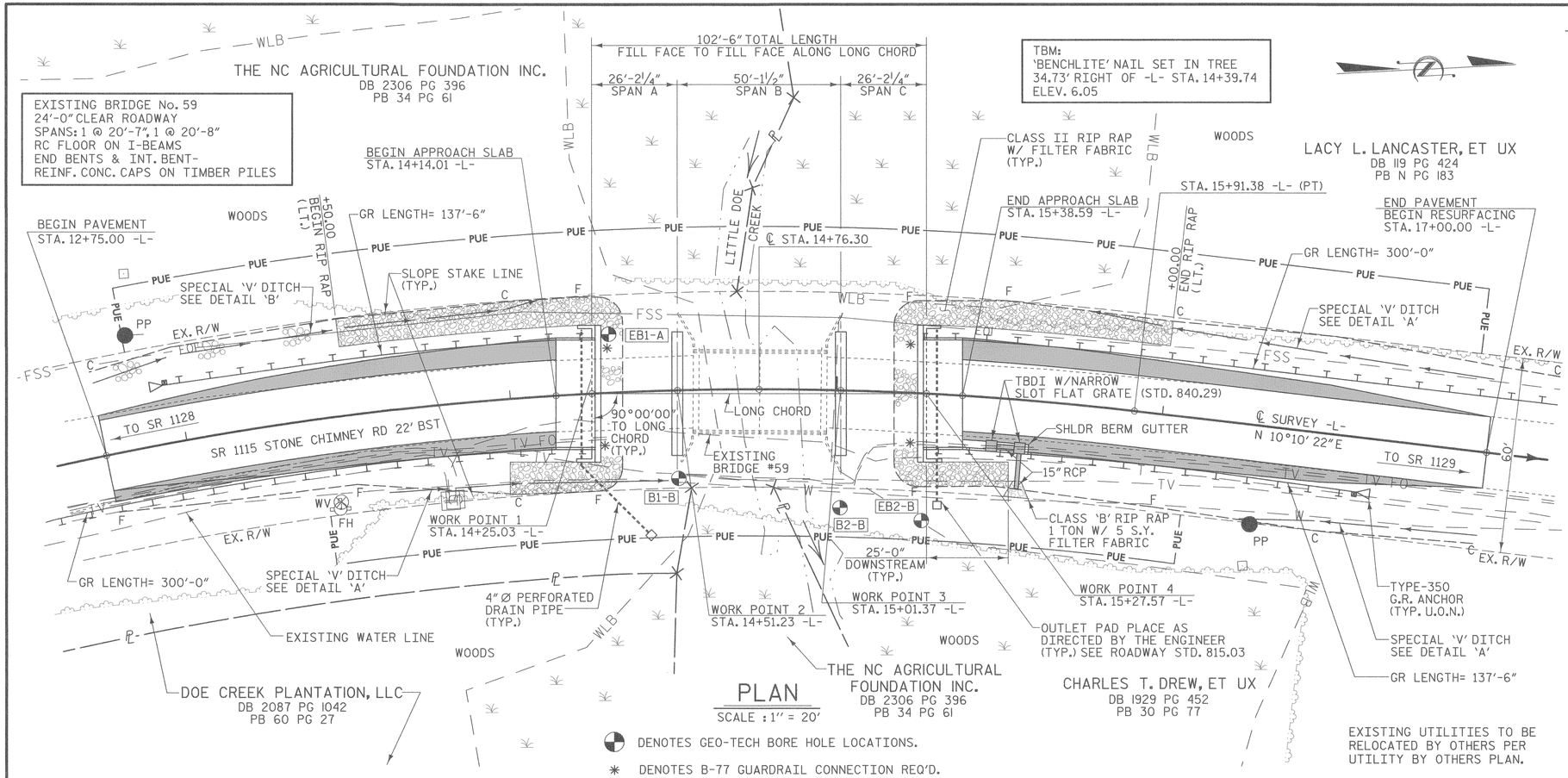

PLAN

SCALE : 1" = 20'

DENOTES GEO-TECH BORE HOLE LOCATIONS.

DENOTES B-77 GUARDRAIL CONNECTION REQ'D. SEE "GUARDRAIL ANCHORAGE FOR BARRIER RAIL" SHEET.

GUARDRAIL LENGTHS AS SHOWN INCLUDE ANCHOR UNITS.

U.O.N. - UNLESS OTHERWISE NOTED

(-) 1.6597 (-) 0.4500 (+) 0.1954

STA. 12+75.00	STA. 14+00.00	STA. 15+50.00	STA. 17+00.00
ELEV. 12.35	ELEV. 10.27	ELEV. 9.60	ELEV. 9.89

GRADE DATA
-L- (SR 1115)

HYDROGRAPHIC DATA:

DESIGN DISCHARGE -	400 CFS
FREQUENCY OF DESIGN FLOOD -	25 YEAR
DESIGN HIGH WATER ELEVATION -	4.5
DRAINAGE AREA -	1.8 SQ. MI.
BASIC DISCHARGE (Q 100) -	650 CFS
BASIC HIGH WATER ELEVATION -	5.4

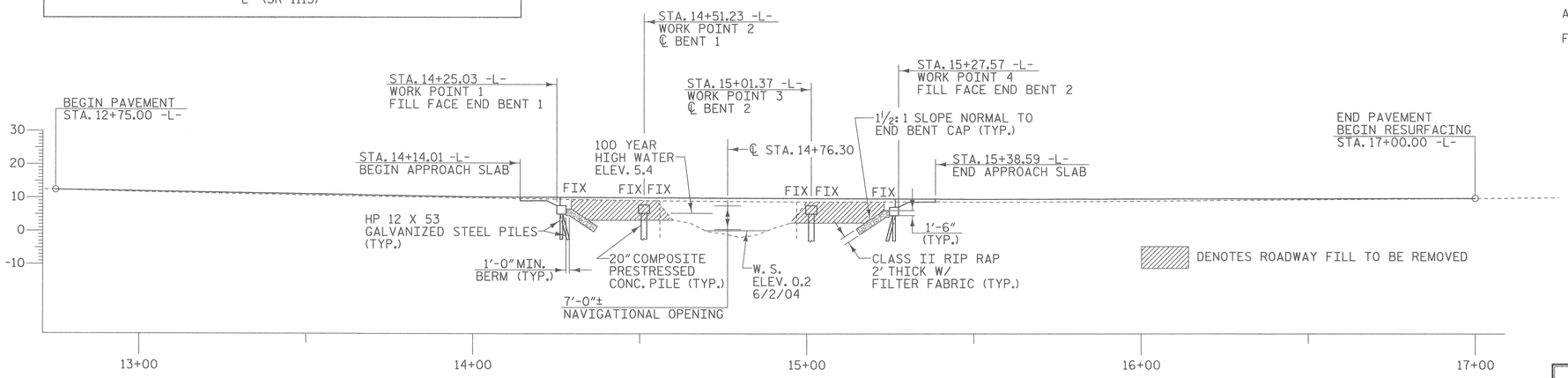

PROFILE ALONG ℄ SURVEY

SCALE : 1" = 20'

NOTES

SPAN 'A' & SPAN 'C' HAVE BEEN DESIGNED FOR TOP DOWN CONSTRUCTION.

FOR EROSION CONTROL MEASURES SEE EROSION CONTROL PLANS.

REMOVAL OF THE EXISTING BRIDGE SHALL BE PERFORMED SO AS NOT TO ALLOW DEBRIS TO FALL INTO THE WATER. THE CONTRACTOR SHALL REMOVE THE BRIDGE AND SUBMIT PLANS FOR THE DEMOLITION IN ACCORDANCE WITH ARTICLE 402-2 OF THE STANDARD SPECIFICATIONS.

INASMUCH AS THE PAINT SYSTEM ON THE EXISTING STRUCTURAL STEEL CONTAINS LEAD, THE CONTRACTOR'S ATTENTION IS DIRECTED TO ARTICLE 107-1, OF THE STANDARD SPECIFICATIONS. ANY COSTS RESULTING FROM COMPLIANCE WITH APPLICABLE STATE OR FEDERAL REGULATIONS PERTAINING TO HANDLING OF MATERIALS CONTAINING LEAD BASED PAINT SHALL BE INCLUDED IN THE BID PRICE FOR "REMOVAL OF EXISTING STRUCTURE."

THE SUBSTRUCTURE OF THE EXISTING BRIDGE INDICATED ON THE PLANS IS FROM THE BEST INFORMATION AVAILABLE. SINCE THIS INFORMATION IS SHOWN FOR THE CONVENIENCE OF THE CONTRACTOR, THE CONTRACTOR SHALL HAVE NO CLAIM WHATSOEVER AGAINST THE DEPARTMENT OF TRANSPORTATION FOR ANY DELAYS OR ADDITIONAL COST INCURRED BASED ON DIFFFERENCES BETWEEN THE EXISTING BRIDGE SUBSTRUCTURE SHOWN ON THE PLANS AND THE ACTUAL CONDITIONS AT THE PROJECT SITE.

THIS STRUCTURE HAS BEEN DESIGNED IN ACCORDANCE WITH HEC 18, "EVALUATING SCOUR AT BRIDGES", MAY 2001.

THIS BRIDGE HAS BEEN DESIGNED IN ACCORDANCE WITH THE REQUIREMENTS OF THE STANDARD SPECIFICATIONS FOR SEISMIC DESIGN OF HIGHWAY BRIDGES FOR SEISMIC CATEGORY A.

DRIVE PILES AT END BENTS No. 1 AND 2 TO A REQUIRED BEARING CAPACITY OF 90 TONS PER PILE. THE REQUIRED BEARING CAPACITY IS EQUAL TO THE ALLOWABLE BEARING CAPACITY WITH A MINIMUM FACTOR OF SAFETY OF TWO.

THE ALLOWABLE BEARING CAPACITY FOR PILES AT END BENTS NO. 1 AND 2 IS 45 TONS.

DRIVE PILES AT BENTS NO. 1 AND 2 TO A REQUIRED BEARING CAPACITY OF 140 TONS PER PILE. THE REQUIRED BEARING CAPACITY IS EQUAL TO THE ALLOWABLE BEARING CAPACITY WITH A MINIMUM FACTOR OF SAFETY OF TWO PLUS ANY ADDITIONAL CAPACITY TO ACCOUNT FOR SCOUR.

THE ALLOWABLE BEARING CAPACITY FOR PILES AT BENTS NO. 1 AND 2 IS 60 TONS.

INSTALL THE CONCRETE SECTION OF PILES AT BENTS NO. 1 AND 2 TO A TIP ELEVATION NO HIGHER THAN -23 FEET.

GALVANIZED STEEL PILES ARE REQUIRED AT END BENTS NO. 1 AND 2 IN ACCORDANCE WITH SECTION 450 OF THE STANDARD SPECIFICATIONS.

GALVANIZED STEEL PILE SECTIONS ARE REQUIRED AT BENTS NO. 1 AND 2 IN ACCORDANCE WITH SECTION 450 OF THE STANDARD SPECIFICATIONS.

STEEL H-PILE POINTS ARE REQUIRED FOR H-PILES AT END BENTS NO. 1 AND 2, AND BENTS NO. 1 AND 2. FOR STEEL PILE POINTS, SEE STANDARD SPECIFICATIONS.

THE SCOUR CRITICAL ELEVATION FOR INTERIOR BENTS No. 1 AND 2 IS -12 FT. THE SCOUR CRITICAL ELEVATIONS ARE FOR USE BY MAINTENANCE FORCES TO MONITOR POSSIBLE SCOUR PROBLEMS DURING THE LIFE OF THE STRUCTURE.

THE COMPOSITE PILE LENGTHS PROVIDED IN THE PLAN ARE FOR ESTIMATING PURPOSES ONLY. ACTUAL PILE LENGTHS SHALL BE DETERMINED BASED ON TEST PILES MONITORED BY THE DEPARTMENT USING PILE DRIVING ANALYZER (PDA).

PILE HAMMER ENERGY REQUIREMENTS FOR DRIVING COMPOSITE PILES TO THE MINIMUM TIP ELEVATIONS SHOULD BE DETERMINED BASED ON TEST PILES MONITORED BY THE DEPARTMENT USING PILE DRIVING ANALYZER (PDA).

ADT = 2400 FOR YEAR 2005

FOR ADDITIONAL NOTES SEE "ROADWAY DETAILS" SHEET.

PROJECT NO. 42814

BRUNSWICK COUNTY

STATION: 14+76.30 -L-

REPLACES BRIDGE NO. 59

NORTH CAROLINA PROFESSIONAL ENGINEER SEAL 19661 L. KEVIN AUSTIN 5/12/10

PLANS PREPARED BY:

MULKEY
ENGINEERS & CONSULTANTS
PO Box 33127
RALEIGH, N.C. 27636
(919) 851-1912
(919) 851-1918 (FAX)
WWW.MULKEYINC.COM

STATE OF NORTH CAROLINA
DEPARTMENT OF TRANSPORTATION
RALEIGH

BRIDGE ON SR 1115 OVER LITTLE DOE CREEK BETWEEN SR 1128 & SR 1129

33' CLEAR ROADWAY - 90°SKEW

REVISIONS						SHEET NO.
NO.	BY:	DATE:	NO.	BY:	DATE:	2
1			3			TOTAL SHEETS
2			4			37

DRAWN BY : W. B. ALLEN DATE : 12/09
CHECKED BY : L. K. AUSTIN DATE : 2/10

5/3/2010 10:51:00 AM R:\Structures\B5017_SD_GD_DI.dgn

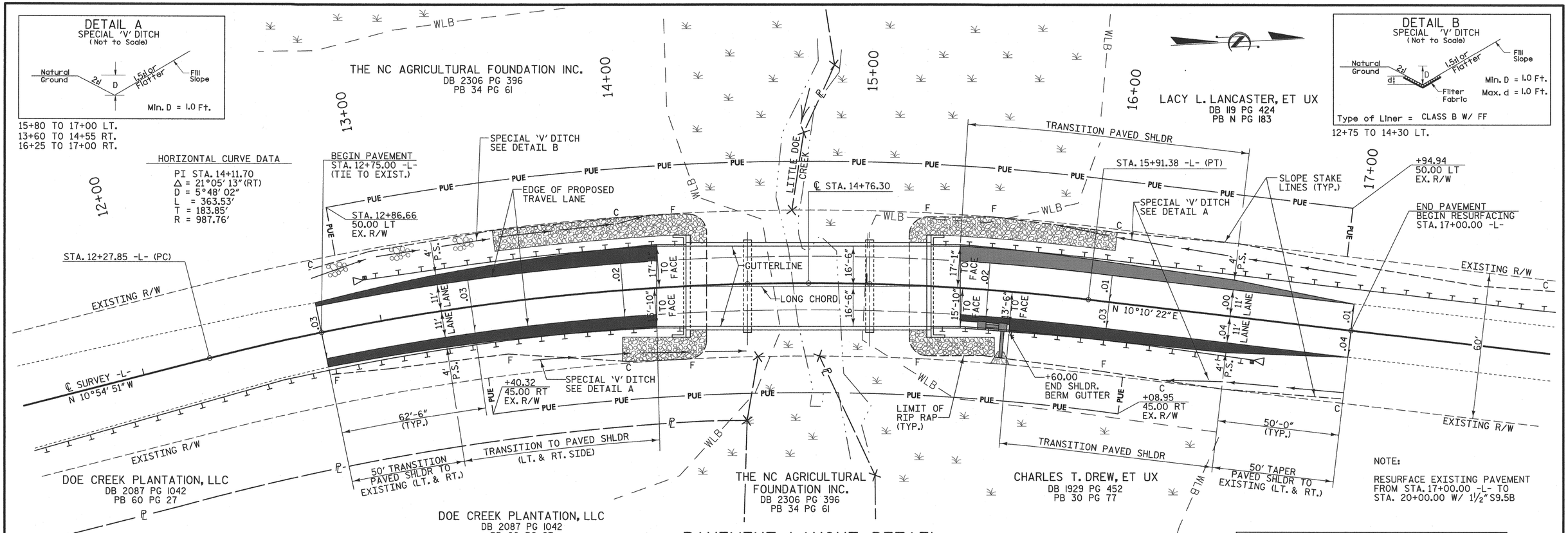

PAVEMENT LAYOUT DETAIL

SCALE : 1" = 20'

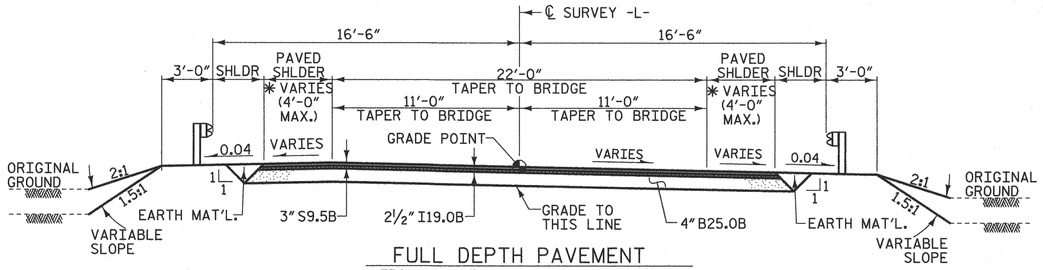

FULL DEPTH PAVEMENT

FROM -L- STA. 14+00 TO BEGIN BRIDGE
FROM END BRIDGE TO -L- STA. 15+50

* TRANSITION PAVED SHOULDER TO THE BACK OF THE APPROACH SLAB

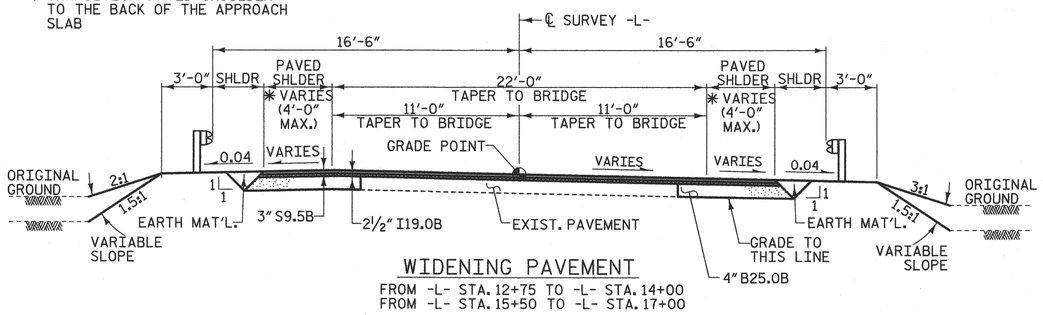

WIDENING PAVEMENT

FROM -L- STA. 12+75 TO -L- STA. 14+00
FROM -L- STA. 15+50 TO -L- STA. 17+00

TYPICAL ROADWAY SECTION

WITHIN CONSTRUCTION LIMITS

NOTES

ROADWAY APPROACH EMBANKMENT SHALL BE WIDENED AS NECESSARY FOR GUARDRAIL INSTALLATION.

THIS STRUCTURE CONTAINS THE NECESSARY CORROSION PROTECTION REQUIRED FOR A CORROSIVE SITE

CLASS AA (4500 PSI) CONCRETE SHALL BE USED IN ALL CAST-IN-PLACE BENT CAPS, END BENT CAPS AND WING WALLS AND SHALL CONTAIN CALCIUM NITRATE CORROSION INHIBITOR IN ACCORDANCE WITH THE STANDARD SPECIFICATIONS.

ALL BAR SUPPORTS USED IN THE BENT CAPS, END BENT CAPS AND WING WALLS AND ALL INCIDENTAL REINFORCING STEEL SHALL BE EPOXY COATED IN ACCORDANCE WITH THE STANDARD SPECIFICATIONS.

PRESTRESSED CONCRETE CORED SLAB UNITS AND 20" COMPOSITE PRESTRESSED CONCRETE PILES SHALL CONTAIN CALCIUM NITRITE CORROSION INHIBITOR IN ACCORDANCE WITH THE STANDARD SPECIFICATIONS.

THE CONCRETE IN THE PILES OF BENTS NO. 1 & 2 SHALL CONTAIN SILICA FUME. SILICA FUME SHALL BE SUBSTITUTED FOR 5% OF THE PORTLAND CEMENT BY WEIGHT. IF THE OPTION OF ARTICLE 1024-1 OF THE STANDARD SPECIFICATIONS TO PARTIALLY SUBSTITUTE CLASS F FLY ASH FOR PORTLAND CEMENT IS EXERCISED, THEN THE RATE OF FLY ASH SUBSTITUTION SHALL BE REDUCED TO 1.0 LB OF FLY ASH PER 1.0 LB CEMENT. NO PAYMENT WILL BE MADE FOR THIS SUBSTITUTION AS IT IS CONSIDERED INCIDENTAL TO THE VARIOUS PAY ITEMS.

FOR SUBMITTAL OF WORKING DRAWINGS, SEE SPECIAL PROVISIONS.

FOR FALSEWORK AND FORMWORK, SEE SPECIAL PROVISIONS.

FOR CRANE SAFEY, SEE SPECIAL PROVISIONS.

THE QUANTITY OF RIP RAP TO BE PAID FOR WILL BE THE ACTUAL NUMBER OF TONS OF EACH CLASS OF RIP RAP WHICH HAS BEEN INCORPORATED INTO THE COMPLETED AND ACCEPTED WORK. THE RIP RAP WILL BE MEASURED BY BEING WEIGHED IN TRUCKS ON CERTIFIED PLATFORM SCALES OR OTHER CERTIFIED WEIGHING DEVICES. THE QUANTITY OF RIP RAP WILL BE PAID FOR AT THE CONTRACT UNIT PRICE PER TON:

PLAIN RIP RAP CLASS II (2'-0" THICK)

END BENT No. 1	170 TONS
END BENT No. 2	160 TONS
TOTAL	330 TONS

DATUM DESCRIPTION

THE LOCALIZED COORDINATE SYSTEM DEVELOPED FOR THIS PROJECT IS BASED ON THE STATE PLANE COORDINATES ESTABLISHED BY OTHERS FOR MONUMENT "MA3002B-100" WITH NAD 1983/95 STATE PLANE GRID COORDINATES OF NORTHING: 93028.125(ft) EASTING: 2218238.127(ft)
THE AVERAGE COMBINED GRID FACTOR USED ON THIS PROJECT (GROUND TO GRID) IS: 1.00011285
THE N.C. LAMBERT GRID BEARING AND LOCALIZED HORIZONTAL GROUND DISTANCE FROM "MA3002B-100" TO -L- STATION 12+27.85
S 5°27'28" W 987.64'
ALL LINEAR DIMENSIONS ARE LOCALIZED HORIZONTAL DISTANCES
VERTICAL DATUM USED IS NAVD 88

NOTE:

RESURFACE EXISTING PAVEMENT FROM STA. 17+00.00 -L- TO STA. 20+00.00 W/ 1½" S9.5B

PROJECT NO. 42814

BRUNSWICK COUNTY

STATION: 14+76.30 -L-

REPLACES BRIDGE NO. 59

NORTH CAROLINA PROFESSIONAL ENGINEER SEAL 19661 L. KEVIN AUSTIN 5/14/10

PLANS PREPARED BY:

MULKEY
ENGINEERS & CONSULTANTS
PO Box 33157
RALEIGH, N.C. 27636
(919) 851-1818
(919) 851-7560 (FAX)
WWW.MULKEYINC.COM

STATE OF NORTH CAROLINA
DEPARTMENT OF TRANSPORTATION
RALEIGH

ROADWAY DETAILS

33' CLEAR ROADWAY - 90°SKEW

REVISIONS						SHEET NO.
NO.	BY:	DATE:	NO.	BY:	DATE:	3
1			3			TOTAL SHEETS
2			4			37

DRAWN BY : W. B. ALLEN DATE : 12/09
CHECKED BY : L. K. AUSTIN DATE : 2/10

5/14/2010 1:57:57 PM R:\Structures\B5217_SD_GD_02.dgn

8/23/99

0 2.5 5	PROJ. REFERENCE NO.	SHEET NO.
	B-5217	4

70 60 50 40 30 20 10 0 10 20 30 40 50 60 70

30 25 20 15 10 5

EXIST. R/W

EOP

14.45

12+00.00

EOP

EXIST. R/W

EXIST. R/W

EOP

5.59

11+50.00

EOP

EXIST. R/W

EXIST. R/W

EOP

16.92

11+00.00

EOP

EXIST. R/W

-L-

5/10/2010
R:\Projects\B5217_xpl.dgn
2:38:46 PM

8/23/99

0 2.5 5	PROJ. REFERENCE NO.	SHEET NO.
	B-5217	5

EXIST. R/W

S.S. 9.50

2:1

2:1

7.89

CLASS II RIP RAP

EOP

0.028

0.028

11.03

0.77

EOP

2:1

S.S. 9.28

EXIST. R/W

13+50.00

EXIST. R/W

S.S. 10.01

2:1

2:1

9.08

EOP

0.030

0.030

11.33

11.83

EOP

2:1

S.S. 10.79

EXIST. R/W

13+00.00

EXIST. R/W

BEGIN PAVEMENT
-L- STA 12+75.00

EOP

13.10

EOP

12+50.00

-L-

EXIST. R/W

5/10/2010
C:\Projects\B5217_xp1.dgn
21:37:30 PM

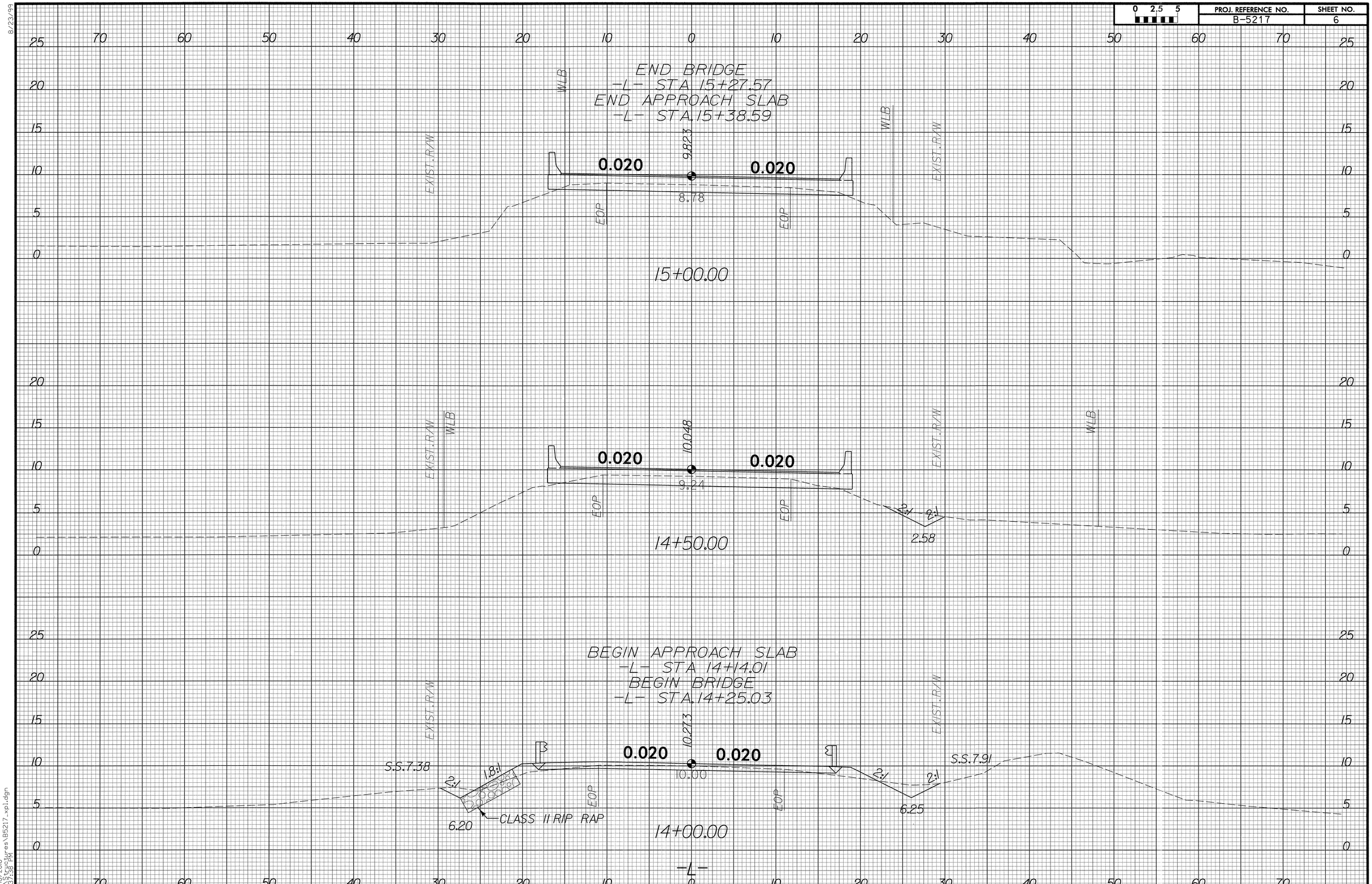

8/23/99

5/10/2010
R:\Structures\B5217_xpl.dgn
2:37:38 PM

8/23/99

0 2.5 5	PROJ. REFERENCE NO.	SHEET NO.
	B-5217	7

EXIST. R/W

S.S. 10.17

2:1

2:1

7.37

0.000

9.794

0.040

9.48

EOP

EOP

2:1

2:1

S.S. 6.36

5.18

EXIST. R/W

WLB

WLB

16+50.00

EXIST. R/W

S.S. 6.78

2:1

2:1

6.25

0.010

9.696

0.030

9.04

EOP

EOP

2:1

EXIST. R/W

WLB

S.S. 4.23

16+00.00

EXIST. R/W

WLB

1.5:1

S.S. 2.88

CLASS II RIP RAP

0.020

9.598

0.020

8.76

EOP

EOP

2:1

EXIST. R/W

WLB

S.S. 4.95

15+50.00

-L-

5/10/2000
C:\Projects\B5217_xpl.dgn
8:37:42 PM

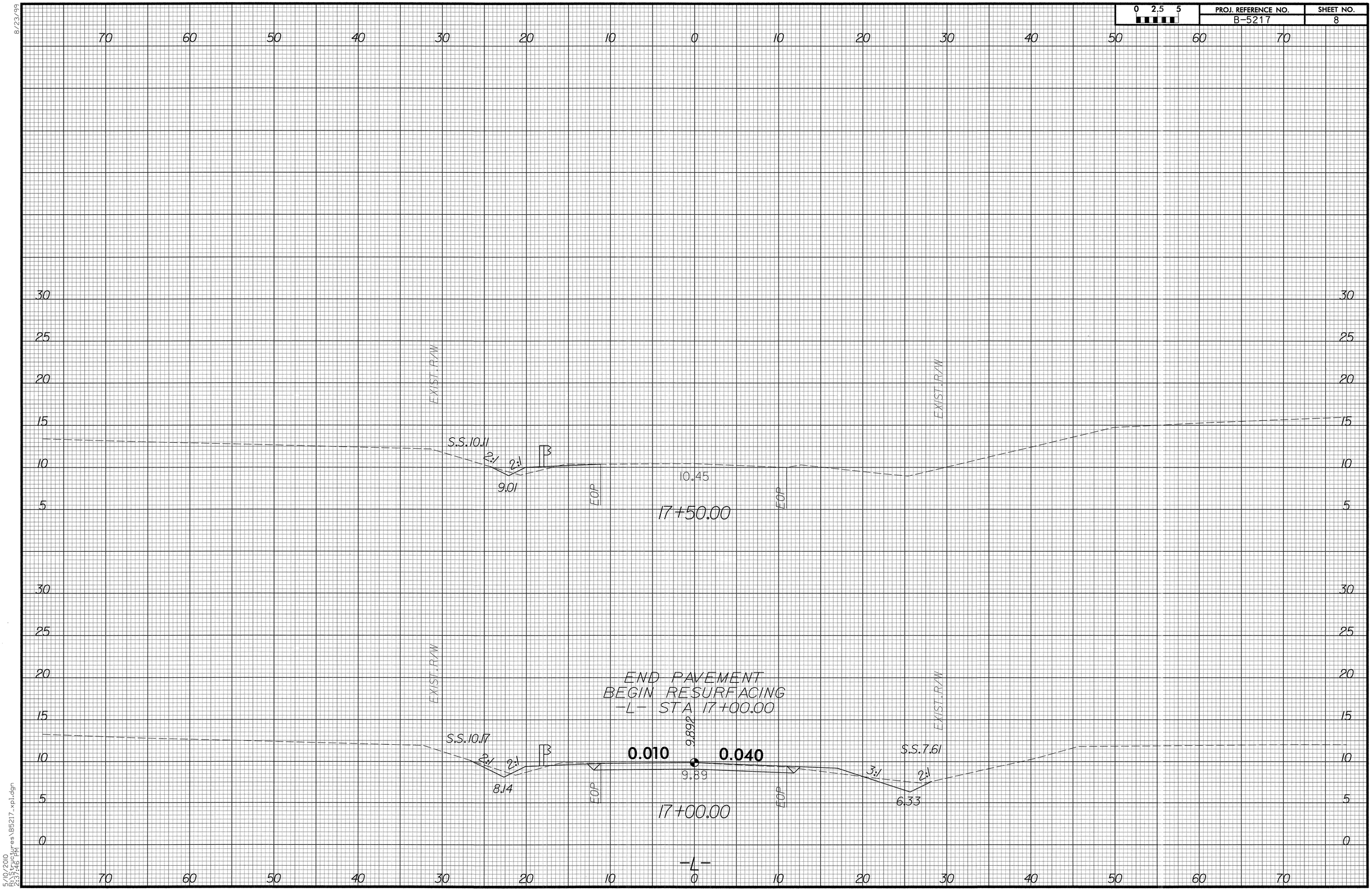

8/23/99

5/10/2010
R:\Structures\B5217_xpl.dgn
2:37:46 PM

8/23/99

0 2.5 5	PROJ. REFERENCE NO.	SHEET NO.
	B-5217	9

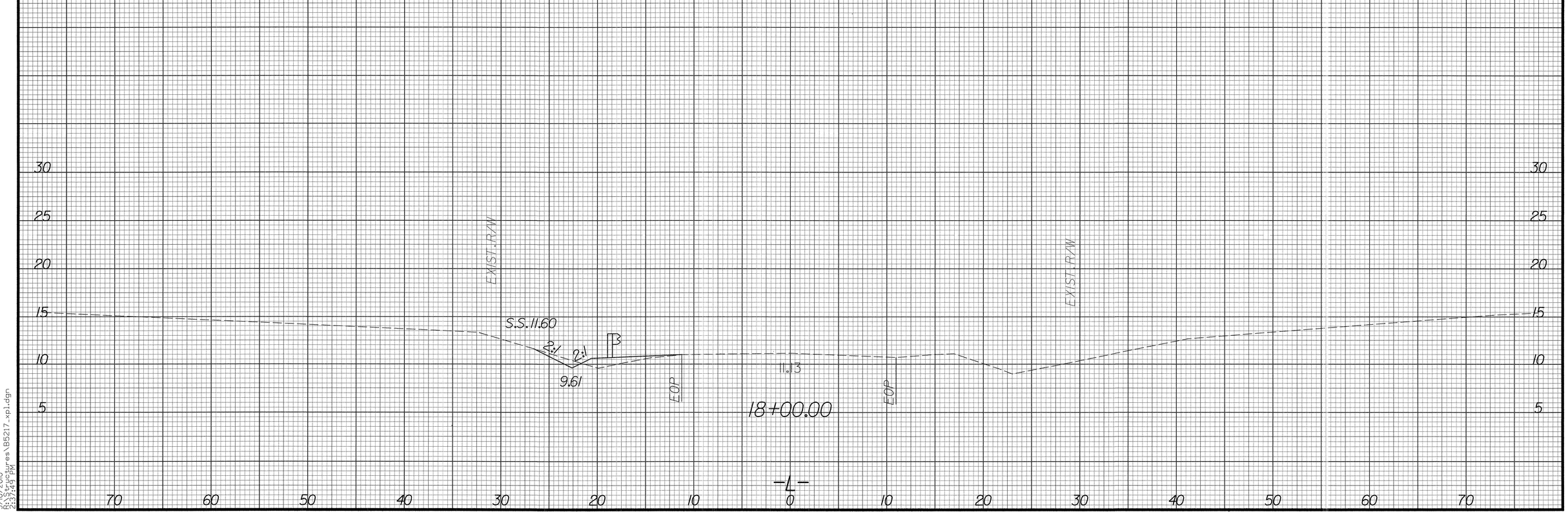

5/10/2010
C:\Projects\B5217_xpl.dgn
2:37:49 PM

FIXED END

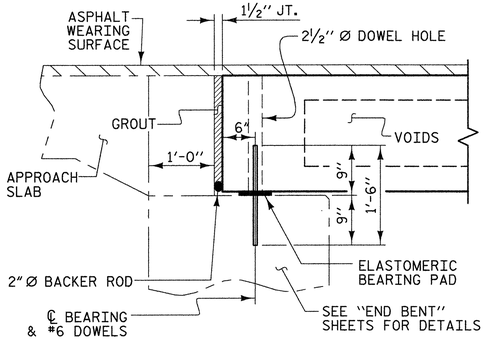

SECTION AT END BENT

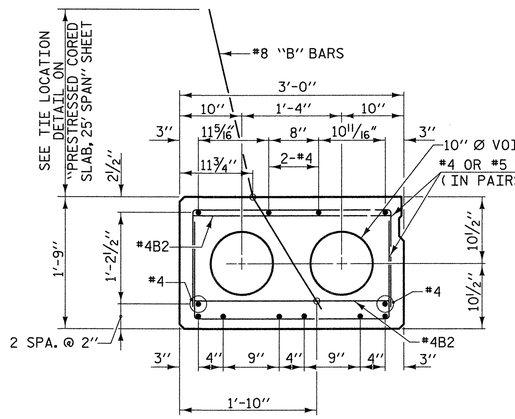

25' SPAN

8 - ½" Ø H.S. STRANDS
EXTERIOR SLAB SECTIONS

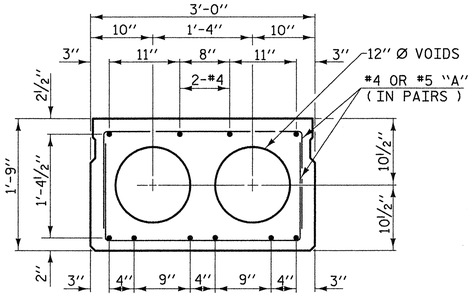

25' SPAN

8- ½" Ø H.S. STRANDS
INTERIOR SLAB SECTIONS

FIXED END FIXED END

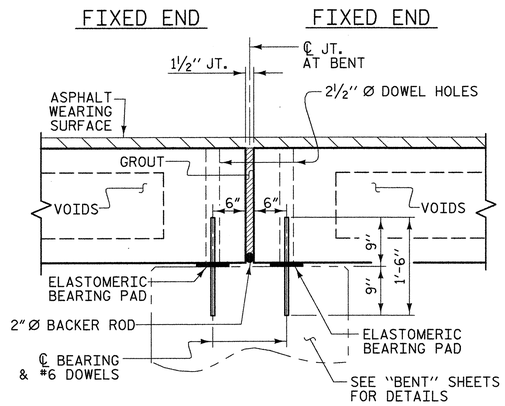

SECTION AT BENT

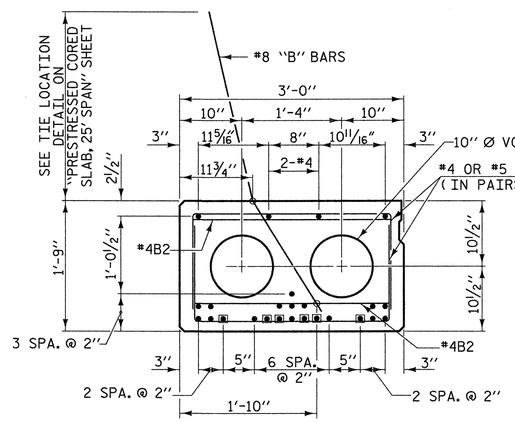

50' SPAN

23 - ½" Ø H.S. STRANDS
EXTERIOR SLAB SECTIONS

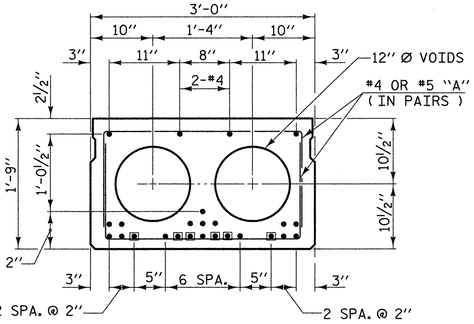

50' SPAN

23 - ½" Ø H.S. STRANDS
INTERIOR SLAB SECTIONS

● DENOTES SHEATHED STRAND
(SEE SHEATH CHART)

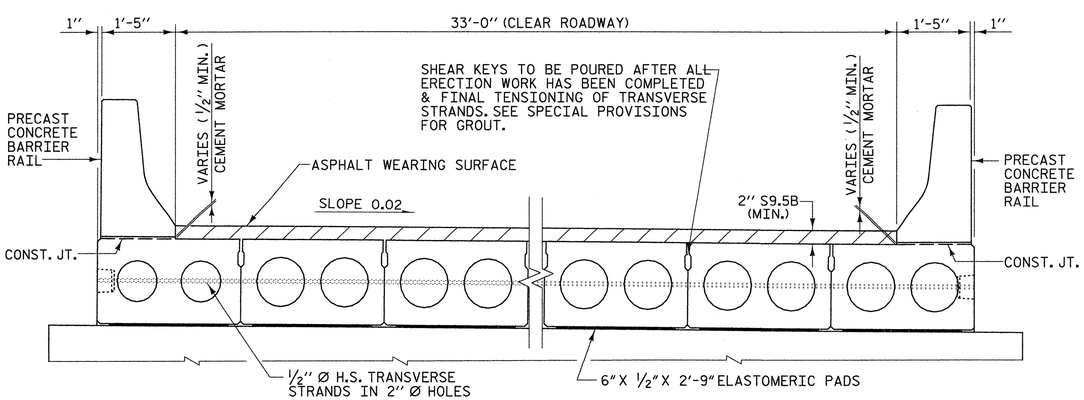

TYPICAL SECTION

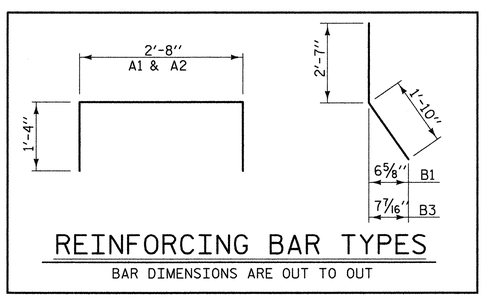

REINFORCING BAR TYPES

BAR DIMENSIONS ARE OUT TO OUT

SHEATH CHART		
SPAN LENGTH	NUMBER OF SHEATHED STRANDS PER EXTERIOR SLAB SECTIONS	NUMBER OF SHEATHED STRANDS PER INTERIOR SLAB SECTIONS
25'	0	0
50'	6	6

BOND SHALL BE BROKEN ON THESE STRANDS FOR A DISTANCE OF 5'-0" FROM END OF SLAB

GENERAL NOTES

ASSUMED LIVE LOAD = HS 20 OR ALTERNATE LOADING, EXCEPT THAT CORED SLAB UNITS IN SPANS A AND C HAVE BEEN DESIGNED FOR HS 25. CORED SLAB UNITS IN SPAN B HAVE BEEN DESIGNED FOR HS 20.

PRESTRESSED CONCRETE CORED SLABS ARE DESIGNED FOR 0 PSI TENSION IN THE PRECOMPRESSED TENSILE ZONE UNDER ALL LOADING CONDITIONS.

CONCRETE = f'c - 5000psi 25' SPAN ONLY. (MIN. COMP. STRENGTH @ 28 DAYS).
f'ci - 4000psi 25' SPAN ONLY (MIN. COMP. STRENGTH @ TRANSFER OF STRESSING FORCE).

CONCRETE = f'c - 7000psi 50' SPAN ONLY. (MIN. COMP. STRENGTH @ 28 DAYS).
f'ci - 5000psi 50' SPAN ONLY (MIN. COMP. STRENGTH @ TRANSFER OF STRESSING FORCE).

SIZE	TYPE	AREA	ULTIMATE STR.	APPLIED FORCE
½" Ø	HIGH STR.	0.153 SQ. IN. PER CABLE	41,300 LBS.	30,980 LBS. PER CABLE

STRUCTURAL STEEL ITEMS SHALL BE OF A GRADE CONFORMING TO EITHER ASTM A36 OR A373, EXCEPT HIGH STRENGTH BOLTS. HIGH STRENGTH BOLTS SHALL BE ASTM A325. ALL STRUCTURAL STEEL SHALL BE GALVANIZED AS PER THE SPECIFICATION.

ALL MATERIAL AND WORKMANSHIP SHALL COMPLY WITH THE APPLICABLE REQUIREMENTS OF THE STANDARD SPECIFICATIONS FOR ROADS AND STRUCTURES OF THE NC DEPARTMENT OF TRANSPORTATION DATED JULY 2006 AND WITH THE SPECIAL PROVISIONS.

ALL PRESTRESSING STRANDS SHALL BE 7-WIRE LOW RELAXATION GRADE 270 STRANDS AND SHALL CONFORM TO AASHTO M203 EXCEPT FOR SAMPLING REQUIREMENTS WHICH SHALL BE IN ACCORDANCE WITH THE STANDARD SPECIFICATIONS.

ALL REINFORCING STEEL CAST WITH THE CORED SLAB SECTIONS SHALL BE GRADE 60 AND SHALL BE INCLUDED IN THE UNIT PRICE BID FOR CONSTRUCTION OF SUPERSTRUCTURE.

RECESSES FOR TRANSVERSE STRANDS SHALL BE GROUTED AFTER THE TENSIONING OF THE STRANDS.

THE BACKER ROD SHALL CONFORM TO THE REQUIREMENTS OF TYPE M BOND BREAKER . SEE SECTION 1028 OF THE STANDARD SPECIFICATIONS. THE JOINT SHALL BE FILLED WITH GROUT.

WHEN CORED SLABS ARE CAST, A POSITIVE HOLD-DOWN SYSTEM SHALL BE EMPLOYED TO PREVENT VOIDS FROM RISING OR MOVING SIDEWAYS. THIS SYSTEM SHALL BE DESIGNED TO BE LEFT IN PLACE UNTIL THE CONCRETE HAS REACHED RELEASE STRENGTH. AT LEAST THREE WEEKS PRIOR TO CASTING CORED SLABS, THE CONTRACTOR SHALL SUBMIT TO THE ENGINEER FOR REVIEW AND COMMENT, DETAILED DRAWINGS OF THE PROPOSED HOLD-DOWN SYSTEM. IN ADDITION TO STRUCTURAL DETAILS, LOCATION AND SPACING OF THE HOLD-DOWNS SHALL BE INDICATED.

#8 "B" BARS SHALL BE EPOXY COATED.

PRESTRESSING STRANDS SHALL BE CUT FLUSH WITH THE CORED SLAB UNIT ENDS.

APPLY EPOXY PROTECTIVE COATING TO CORED SLAB UNIT ENDS.

UNLESS OTHERWISE NOTED ON THE PLANS, ALL EXPOSED CORNERS ON STRUCTURES SHALL BE CHAMFERED ¾".

FOR GROUT FOR STRUCTURES, SEE SPECIAL PROVISIONS.

FOR PRESTRESSED CONCRETE MEMBERS, SEE SPECIAL PROVISIONS.

FOR DEFLECTION TABLE, SEE "PRECAST CONCRETE BARRIER RAIL SECTIONS 25' & 50' SPANS" SHEET.

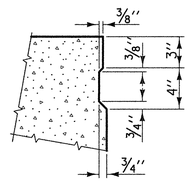

SHEAR KEY DETAIL

NOTE: OMIT SHEAR KEY ON OUTSIDE OF EXTERIOR CORED SLAB

PROJECT NO. 42814

BRUNSWICK COUNTY

STATION: 14+76.30 -L-

REPLACES BRIDGE NO. 59

STATE OF NORTH CAROLINA
DEPARTMENT OF TRANSPORTATION
RALEIGH
STANDARD

PRESTRESSED CORED SLAB 25' & 50' SPANS

33' CLEAR ROADWAY - 90°SKEW

NORTH CAROLINA PROFESSIONAL ENGINEER SEAL 19661 L. KEVIN AUSTIN 5/11/10

PLANS PREPARED BY:

MULKEY
ENGINEERS & CONSULTANTS
PO Box 33127
Raleigh, N.C. 27636
(919) 851-1912
(919) 851-1913 (FAX)
WWW.MULKEYINC.COM

REVISIONS					
NO.	BY:	DATE:	NO.	BY:	DATE:
1			3		
2			4		

SHEET NO. 10

TOTAL SHEETS 37

DRAWN BY : W. B. ALLEN DATE : 12/09
CHECKED BY : L. K. AUSTIN DATE : 2/10

5/10/2010 2:38:54 PM R:\Structures\B5217_SD_TS_0.dgn

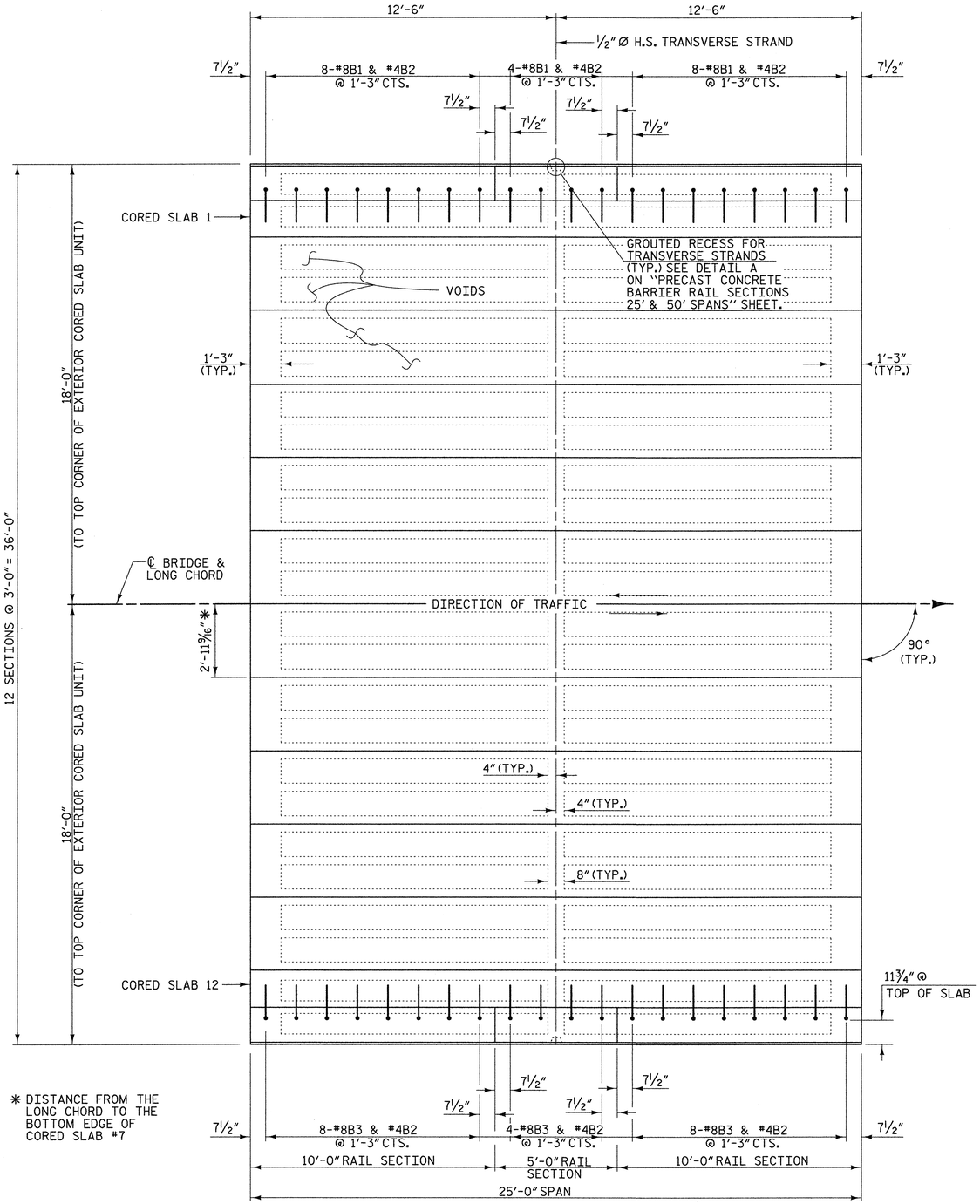

PLAN OF SPAN

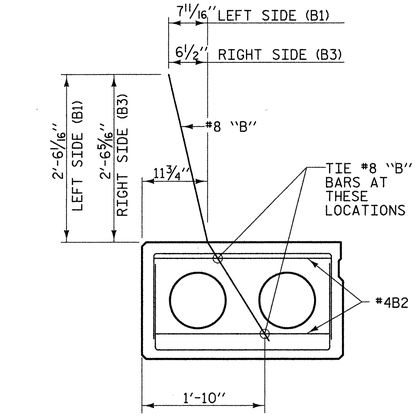

TIE LOCATION FOR #8 "B"

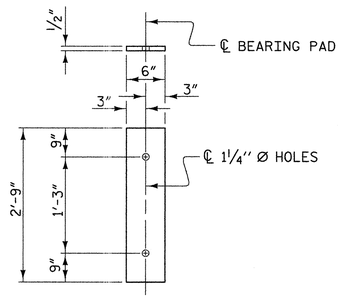

FIXED
(TYPE I - 72 REQ'D)

ELASTOMERIC BEARING DETAILS

NOTE: ELASTOMER HARDNESS SHALL BE 50 DUROMETERS.

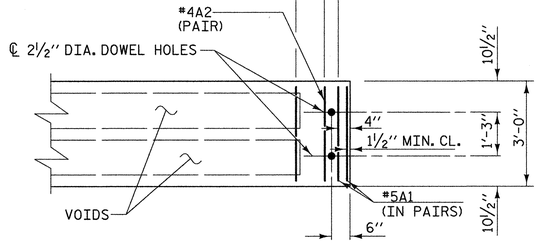

PART PLAN - SLAB SECTION

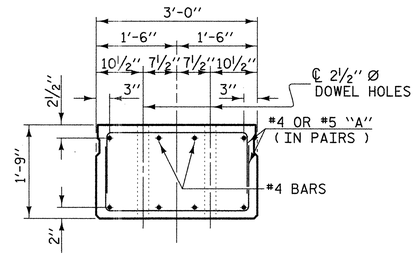

SLAB END ELEVATION

THE 2 1/2" Ø DOWEL HOLES AT FIXED ENDS OF SLAB SECTIONS SHALL BE FILLED WITH GROUT, SEE SPECIAL PROVISIONS.

PROJECT NO. 42814

BRUNSWICK COUNTY

STATION: 14+76.30 -L-

REPLACES BRIDGE NO. 59

NORTH CAROLINA PROFESSIONAL SEAL 19661 ENGINEER L. KEVIN AUSTIN 5/11/10

PLANS PREPARED BY:

MULKEY
ENGINEERS & CONSULTANTS
PO BOX 33127
RALEIGH, N.C. 27636
(919) 851-1815
(919) 851-1818 (FAX)
WWW.MULKEYINC.COM

STATE OF NORTH CAROLINA
DEPARTMENT OF TRANSPORTATION
RALEIGH

STANDARD

PRESTRESSED CORED SLAB 25' SPAN

33' CLEAR ROADWAY - 90°SKEW

REVISIONS						SHEET NO.
NO.	BY:	DATE:	NO.	BY:	DATE:	11
1			3			TOTAL SHEETS
2			4			37

DRAWN BY : W. B. ALLEN DATE : 12/09
CHECKED BY : L. K. AUSTIN DATE : 2/10

5/10/2010 2:39:31 PM R:\Structures\1521f_SD_CS_04.dgn

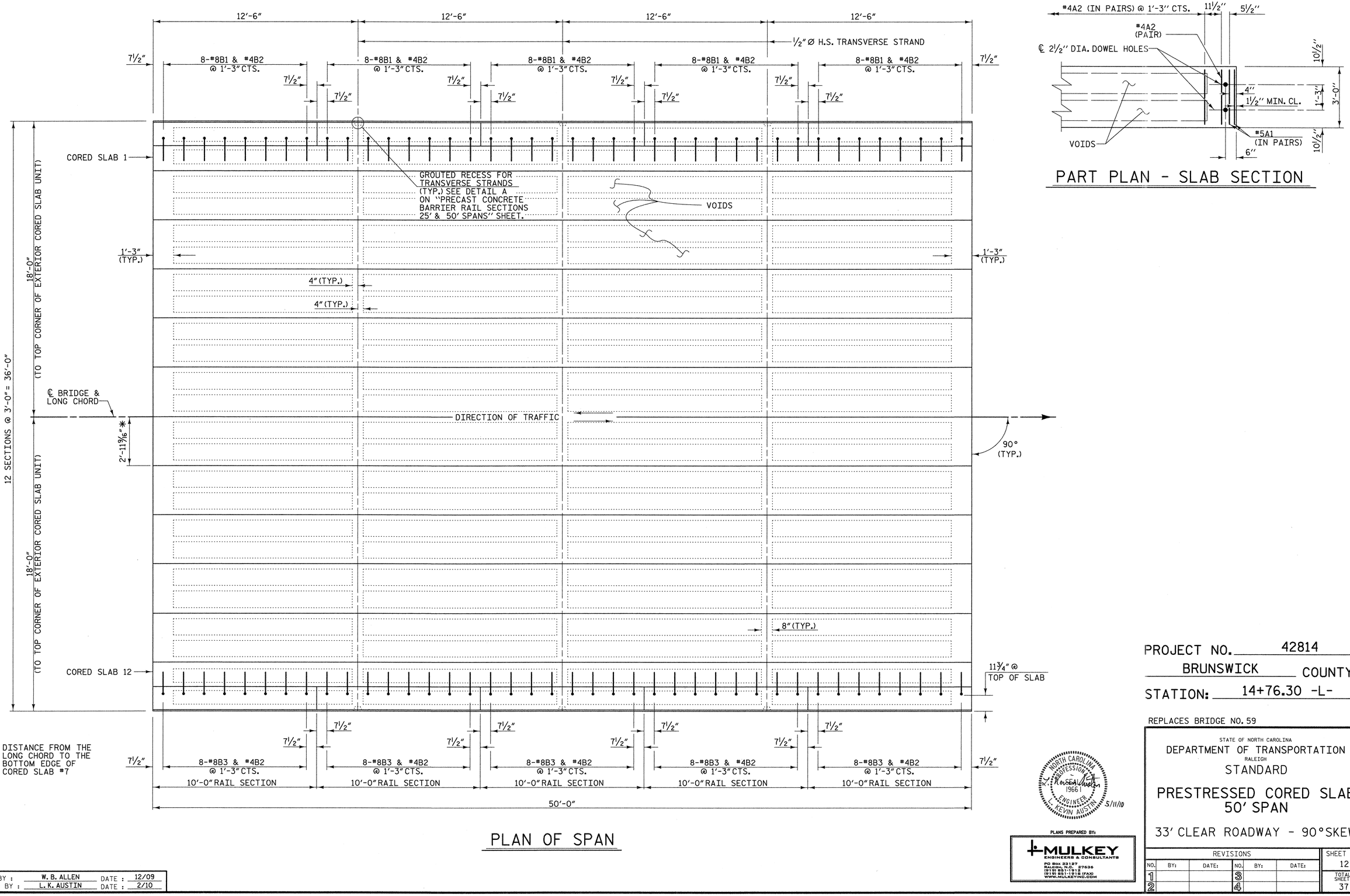

PLAN OF SPAN

PART PLAN - SLAB SECTION

PROJECT NO. 42814

BRUNSWICK COUNTY

STATION: 14+76.30 -L-

REPLACES BRIDGE NO. 59

STATE OF NORTH CAROLINA
DEPARTMENT OF TRANSPORTATION
RALEIGH

STANDARD

PRESTRESSED CORED SLAB 50' SPAN

33' CLEAR ROADWAY - 90°SKEW

NORTH CAROLINA PROFESSIONAL ENGINEER SEAL 19661 L. KEVIN AUSTIN 5/11/10

PLANS PREPARED BY:

MULKEY
ENGINEERS & CONSULTANTS
PO Box 33127
Raleigh, NC 27636
(919) 851-1912
(919) 851-1918 (FAX)
WWW.MULKEYINC.COM

REVISIONS						SHEET NO.
NO.	BY:	DATE:	NO.	BY:	DATE:	12
1			3			TOTAL SHEETS
2			4			37

DRAWN BY : W. B. ALLEN DATE : 12/09
CHECKED BY : L. K. AUSTIN DATE : 2/10

5/10/2010 2:40:02 PM R:\Structures\B52IT_SD_CS_02.dgn

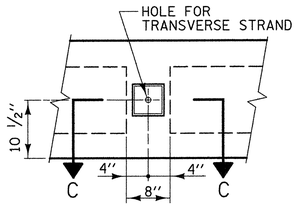

ELEVATION

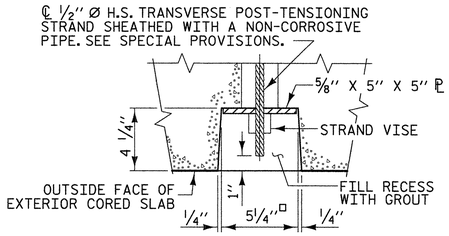

SECTION C-C

DETAIL A
GROUTED RECESS AT END OF POST-TENSIONED STRAND CORED SLAB

EXTERIOR SLAB UNIT	25′	50′
CAMBER (SLAB UNIT ALONE IN PLACE)	⅛" (UP)	1 15/16" (UP)
DEFLECTION (SUPERIMPOSED DEAD LOAD)	* 0"	* ¼" (DOWN)
FINAL DEFLECTION	⅛" (UP)	1 11/16" (UP)
* INCLUDES FUTURE WEARING SURFACE		

INTERIOR SLAB UNIT	25′	50′
CAMBER (SLAB UNIT ALONE IN PLACE)	⅛" (UP)	2 3/16" (UP)
DEFLECTION (SUPERIMPOSED DEAD LOAD)	* 0"	* ¼" (DOWN)
FINAL DEFLECTION	⅛" (UP)	1 15/16" (UP)
* INCLUDES FUTURE WEARING SURFACE		

NOTES

EACH PRECAST RAIL UNIT SHALL BE CAST WITH CLASS AA CONCRETE.

RAIL TO BE FLUSH WITH CORED SLAB UNITS AT EACH END OF SPAN.

GROUT SHALL BE 5" ABOVE THE BOTTOM OF THE RAIL BETWEEN RAIL SECTIONS AND THE JOINTS AT THE BENTS.

EACH PRECAST RAIL UNIT SHALL BE SUPPLIED WITH LIFTING DEVICE(S). NO CABLES ARE TO BE WRAPPED AROUND THE RAIL UNITS FOR LIFTING.

CONCRETE CHAMFERS:
UNLESS OTHERWISE NOTED ON THE PLANS, ALL EXPOSED CORNERS ON STRUCTURES SHALL BE CHAMFERED ¾" WITH THE FOLLOWING EXCEPTIONS: TOP CORNERS OF CURBS MAY BE ROUNDED TO 1½" RADIUS WHICH IS BUILT INTO CURB FORMS; CORNERS OF TRANSVERSE FLOOR EXPANSION JOINTS SHALL BE ROUNDED WITH A ¼" FINISHING TOOL UNLESS OTHERWISE REQUIRED ON PLANS; AND CORNERS OF EXPANSION JOINTS IN THE ROADWAY FACES AND TOPS OF CURBS AND SIDEWALKS SHALL BE ROUNDED TO A ¼" RADIUS WITH A FINISHING STONE OR TOOL UNLESS OTHERWISE ON PLANS.

NO DECK DRAINS ALLOWED.

BILL OF MATERIAL FOR ONE 5′-0" RAIL SECTION

BAR	NO.	SIZE	TYPE	LENGTH	WEIGHT
B3	5	#5	1	2′-8"	14
B4	5	#5	2	4′-11"	26
B5	5	#5	STR.	4′-7"	24
REINFORCING STEEL LBS. =					64
CLASS AA CONCRETE CU. YDS. =					0.5

BILL OF MATERIAL FOR ONE 10′-0" RAIL SECTION

BAR	NO.	SIZE	TYPE	LENGTH	WEIGHT
B3	9	#5	1	2′-8"	25
B4	9	#5	2	4′-11"	46
B6	5	#5	STR.	9′-7"	50
REINFORCING STEEL LBS. =					121
CLASS AA CONCRETE CU. YDS. =					1.0

BAR TYPES

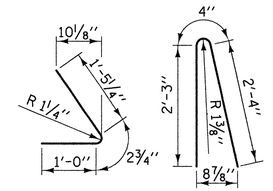

ALL BAR DIMENSIONS ARE OUT TO OUT

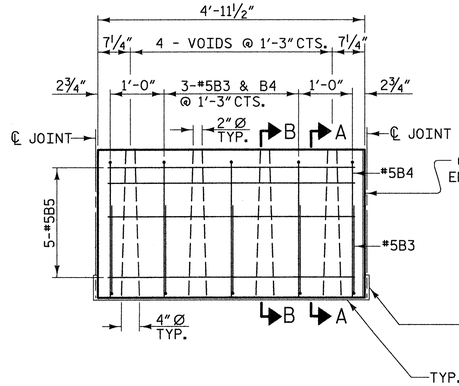

TYPICAL 5′-0" PRECAST UNIT

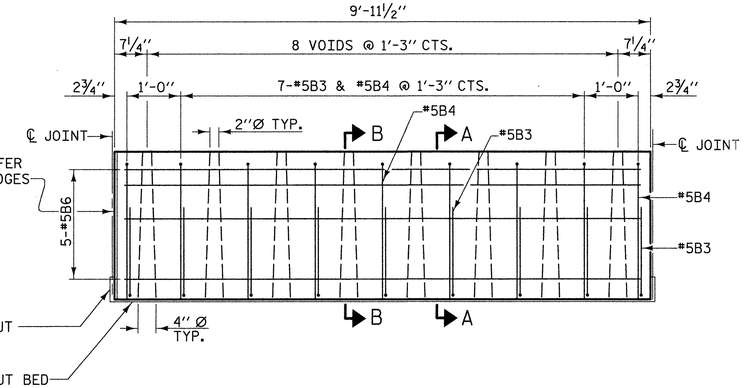

TYPICAL 10′-0" PRECAST UNIT

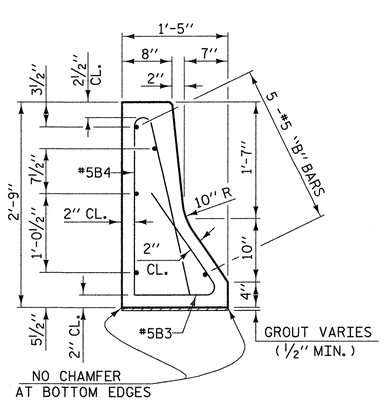

SECTION A-A

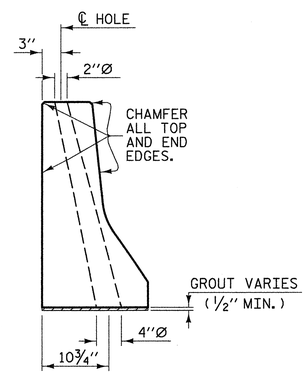

SECTION B-B

PROJECT NO. 42814

BRUNSWICK COUNTY

STATION: 14+76.30 -L-

REPLACES BRIDGE NO. 59

STATE OF NORTH CAROLINA
DEPARTMENT OF TRANSPORTATION
RALEIGH

STANDARD
PRECAST CONCRETE BARRIER RAIL SECTIONS 25′ & 50′ SPANS
33′ CLEAR ROADWAY - 90°SKEW

NORTH CAROLINA PROFESSIONAL SEAL 19661 ENGINEER L. KEVIN AUSTIN — 5/11/10

PLANS PREPARED BY:
MULKEY
ENGINEERS & CONSULTANTS
PO Box 33127
Raleigh, N.C. 27636
(919) 851-1212
(919) 851-1918 (FAX)
WWW.MULKEYINC.COM

REVISIONS						SHEET NO.
NO.	BY:	DATE:	NO.	BY:	DATE:	13
1			3			TOTAL SHEETS
2			4			37

DRAWN BY : W. B. ALLEN DATE : 12/09
CHECKED BY : L. K. AUSTIN DATE : 2/10

5/10/2010 2:40:28 PM R:\Structures\B5217_SD_BR_00.dgn

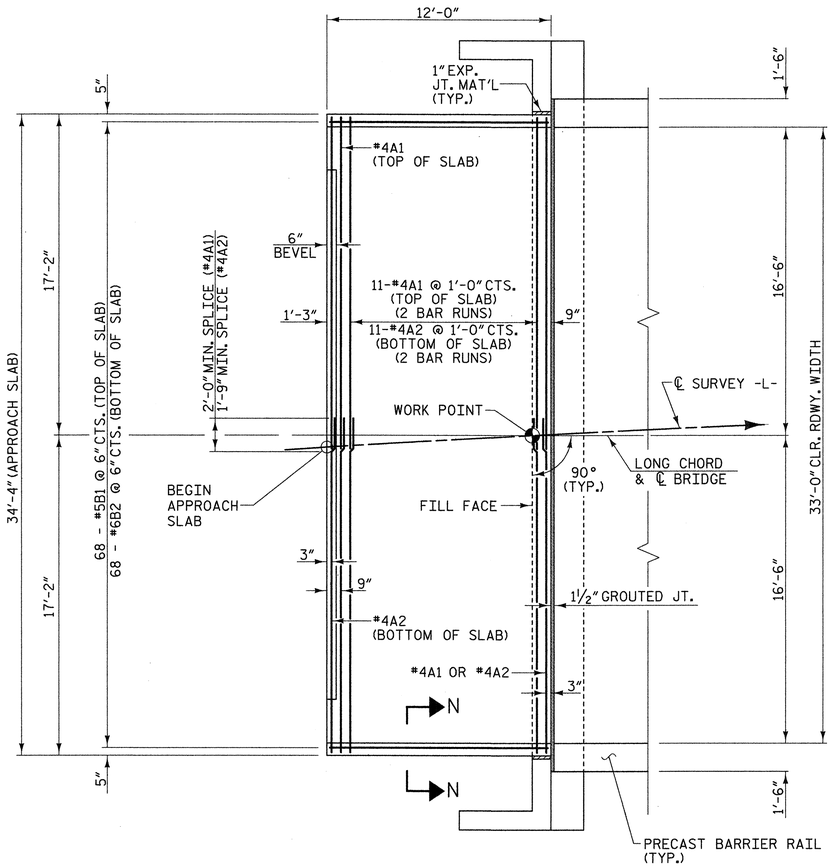

PLAN OF APPROACH SLAB

END BENT 1 APPROACH SLAB SHOWN
END BENT 2 APPROACH SLAB SIMILAR

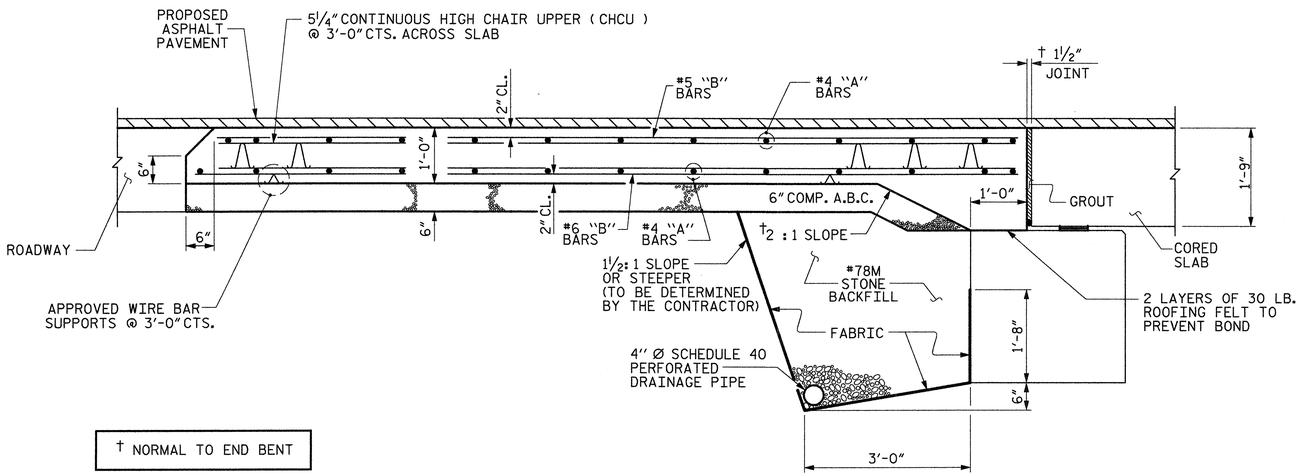

† NORMAL TO END BENT

SECTION THRU SLAB

NOTES

REINFORCED BRIDGE APPROACH FILL INCLUDING FABRIC, IMPERMEABLE GEOMEMBRANE, 4" Ø DRAINAGE PIPE, #78M STONE, AND SELECT MATERIAL, SHALL BE INCLUDED IN THE LUMP SUM CONTRACT BID PRICE FOR BRIDGE APPROACH SLABS.

FABRIC SHALL BE TYPE 1 ENGINEERING FABRIC IN ACCORDANCE WITH THE STANDARD SPECIFICATIONS SECTION 1056.

#78M STONE BACKFILL (CLASS V SELECT MATERIAL) SHALL BE IN ACCORDANCE WITH STANDARD SPECIFICATIONS SECTION 1016.

#78M STONE BACKFILL IS TO BE CONTINUOUS ALONG FILL FACE OF BACKWALL FROM OUTSIDE EDGE TO OUTSIDE EDGE OF APPROACH SLAB.

FOR THE 4" Ø DRAINAGE PIPE OUTLET(S), SEE ROADWAY STANDARD DRAWINGS.

AREA BETWEEN THE WINGWALL AND APPROACH SLAB SHALL BE GRADED TO DRAIN THE WATER AWAY FROM THE FILL FACE OF THE BRIDGE AND SHALL BE PAVED.

THE 6" COMP. A.B.C. SHALL BE FLUSH WITH THE ROADWAY END OF THE APPROACH SLAB AND SHALL EXTEND 1'-0" OUTSIDE OF EACH EDGE OF THE APPROACH SLAB.

THE CONTRACTOR MAY USE 4" TYPE B-25.0B ASPHALT CONCRETE BASE COURSE IN LIEU OF 6" COMP. A.B.C. IF THIS OPTION IS USED, THE BASE COURSE SHALL BE FLUSH WITH THE ROADWAY END OF THE APPROACH SLAB, AND THE WIDTH SHALL BE THE SAME AS THAT OF THE APPROACH SLAB.

THE CONTRACTOR MAY USE 5" CLASS "A" CONCRETE BASE IN LIEU OF 6" COMP. A.B.C. IF THIS OPTION IS USED, THE CONCRETE BASE SHALL BE FLUSH WITH THE ROADWAY END OF THE APPROACH SLAB, AND THE WIDTH SHALL BE THE SAME AS THAT OF THE APPROACH SLAB. THE CONCRETE SHALL BE FINISHED TO A SMOOTH SURFACE AND A LAYER OF 30 LB ROOFING FELT SHALL BE PLACED BETWEEN THE CONCRETE BASE AND THE APPROACH SLAB TO PREVENT BOND. THE APPROACH SLAB SHALL NOT BE CAST UNTIL THE CONCRETE BASE HAS REACHED AN AGE OF THREE CURING DAYS.

FOR JOINT DETAILS, SEE "PRESTRESSED CORED SLAB, 25' & 50' SPANS" SHEETS.

THE JOINT AT THE END BENT SHALL BE GROUTED AS SOON AS PRACTICAL AFTER THE CONSTRUCTION OF THE APPROACH SLABS.

APPROACH SLAB GROOVING IS NOT REQUIRED.

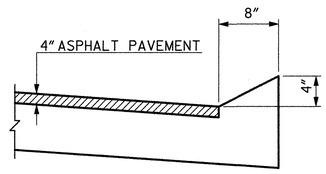

SECTION N-N

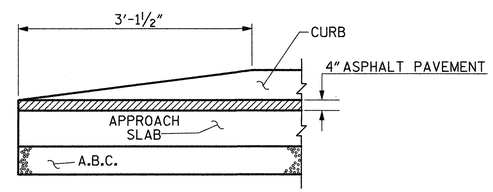

END OF CURB WITHOUT SHOULDER BERM GUTTER

CURB DETAILS

BILL OF MATERIAL

APPROACH SLAB AT EB #1

BAR	NO.	SIZE	TYPE	LENGTH	WEIGHT
✱A1	26	#4	STR	18'-0"	313
A2	26	#4	STR	17'-11"	311
✱B1	68	#5	STR	11'-3"	798
B2	68	#6	STR	11'-8"	1192
REINFORCING STEEL				LBS.	1503
✱EPOXY COATED REINFORCING STEEL				LBS.	1111
CLASS AA CONCRETE				C.Y.	16.3

APPROACH SLAB AT EB #2

BAR	NO.	SIZE	TYPE	LENGTH	WEIGHT
✱A1	26	#4	STR	18'-0"	313
A2	26	#4	STR	17'-11"	311
✱B1	68	#5	STR	11'-3"	798
B2	68	#6	STR	11'-8"	1192
REINFORCING STEEL				LBS.	1503
✱EPOXY COATED REINFORCING STEEL				LBS.	1111
CLASS AA CONCRETE				C.Y.	16.3

PROJECT NO. 42814
BRUNSWICK COUNTY
STATION: 14+76.30 -L-

REPLACES BRIDGE NO. 59

ASSEMBLED BY : W. B. ALLEN	DATE : 12/09
CHECKED BY : L. K. AUSTIN	DATE : 2/10
DRAWN BY : KMM 3-08	
CHECKED BY : GM 3-08	

PLANS PREPARED BY:
MULKEY
ENGINEERS & CONSULTANTS
PO Box 33127
Raleigh, NC 27636
(919) 851-1012
(919) 851-1918 (FAX)
WWW.MULKEYINC.COM

THIS STANDARD DRAWING REVIEWED & ADOPTED FOR USE AT THE REFERENCED LOCATION BY THE UNDERSIGNED:

NORTH CAROLINA PROFESSIONAL SEAL 1966 ENGINEER L. KEVIN AUSTIN
5/11/10

STATE OF NORTH CAROLINA
DEPARTMENT OF TRANSPORTATION
RALEIGH

STANDARD
BRIDGE APPROACH SLAB
FOR PRESTRESSED CONCRETE
CORED SLAB UNIT
(SUB-REGIONAL TIER)
STD. NO. BAS13

REVISIONS					
NO.	BY:	DATE:	NO.	BY:	DATE:
1			3		
2			4		

SHEET NO. 14
TOTAL SHEETS 37

5/10/2010 2:48:53 PM R:\Structures\B5217_SD_AS.dgn

PROJECT REFERENCE NO.	SHEET NO.
B-5217	15

01-JUN-2009 14:15
s:\contracts\contracts\special details\enclosed\stds\06' stds to special details\422d11\bridge approach fill sub reg tier.dgn
jhoverton AT PS237561

STATE OF NORTH CAROLINA
DEPT. OF TRANSPORTATION
DIVISION OF HIGHWAYS
RALEIGH, N.C.

ENGLISH DETAIL DRAWING FOR
BRIDGE APPROACH FILLS
CORED SLAB & BOX BEAM BRIDGES
SUB REGIONAL TIER

SHEET 1 OF 2
422D11

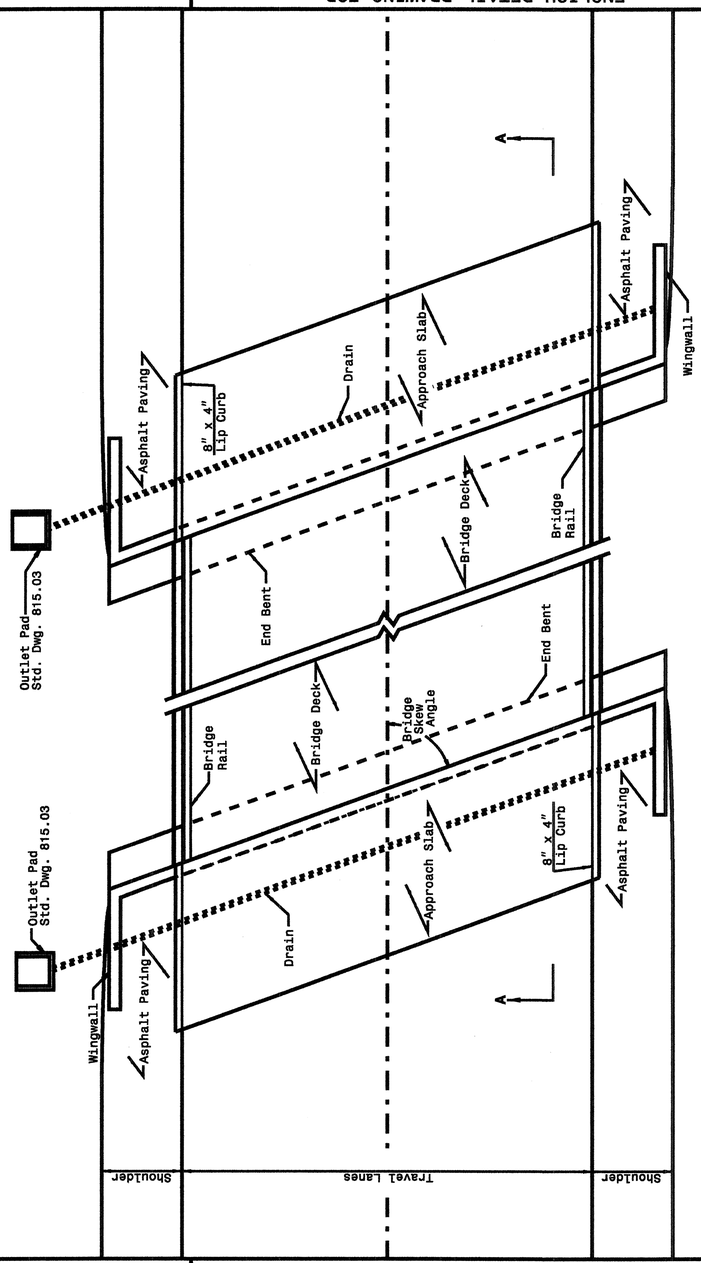

PLAN VIEW
12' APPROACH SLAB

STATE OF NORTH CAROLINA
DEPT. OF TRANSPORTATION
DIVISION OF HIGHWAYS
RALEIGH, N.C.

ENGLISH DETAIL DRAWING FOR
BRIDGE APPROACH FILLS
CORED SLAB & BOX BEAM BRIDGES
SUB REGIONAL TIER

SHEET 2 OF 2
422D11

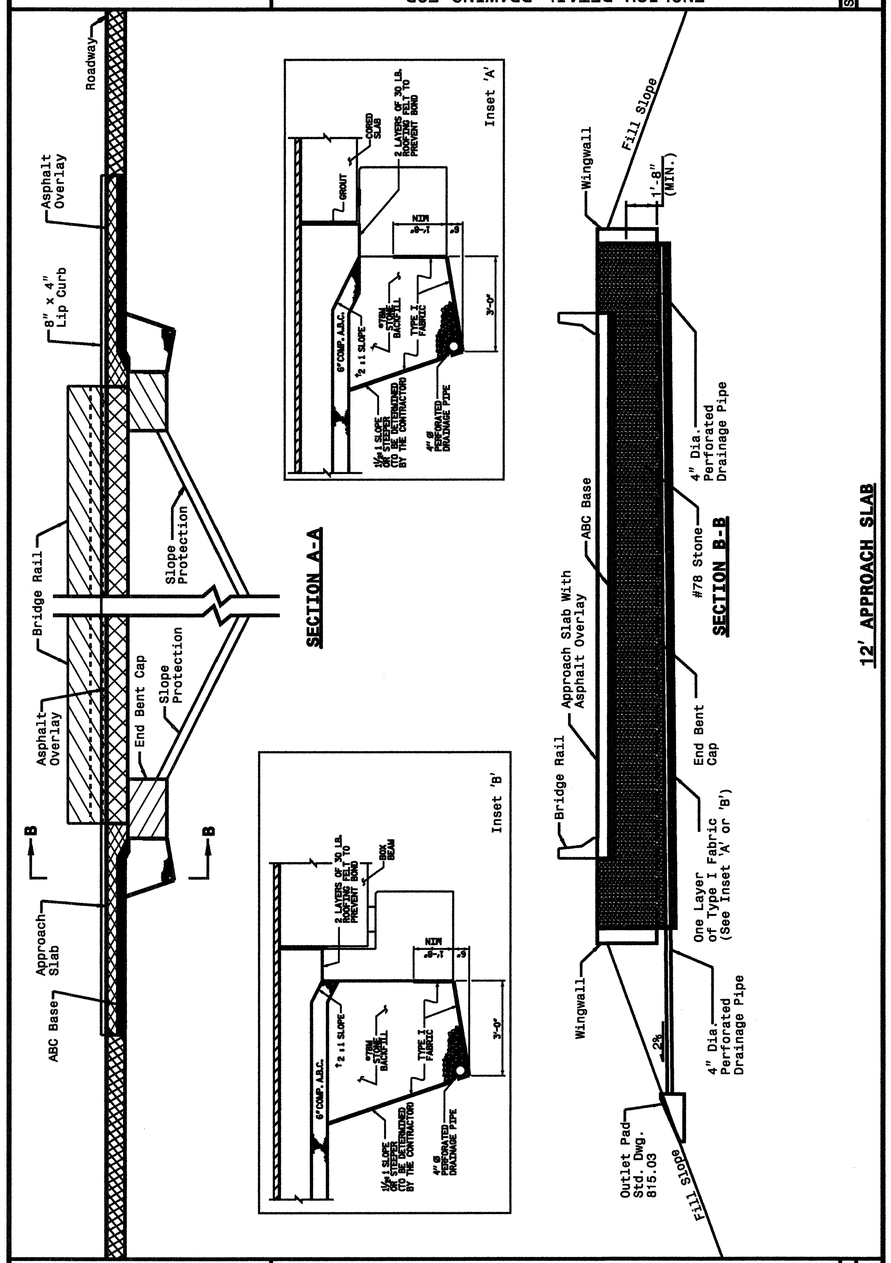

SECTION A-A

SECTION B-B

12' APPROACH SLAB

STATE OF
NORTH CAROLINA
DEPT. OF TRANSPORTATION
DIVISION OF HIGHWAYS
RALEIGH, N.C.

ENGLISH DETAIL DRAWING FOR
BRIDGE APPROACH FILLS
CORED SLAB & BOX BEAM BRIDGES
SUB REGIONAL TIER

SHEET 1 OF 2
422D11

STATE OF
NORTH CAROLINA
DEPT. OF TRANSPORTATION
DIVISION OF HIGHWAYS
RALEIGH, N.C.

ENGLISH DETAIL DRAWING FOR
BRIDGE APPROACH FILLS
CORED SLAB & BOX BEAM BRIDGES
SUB REGIONAL TIER

SHEET 2 OF 2
422D11

PROJECT SERVICES UNIT
STANDARDS AND SPECIAL DESIGN
Office 919-250-4128 FAX 919-250-4119

BRIDGE APPROACH FILLS
CORED SLAB & BOX BEAM BRIDGES
SUB REGIONAL TIER

ORIGINAL BY: K. A. Kempf DATE: 6-10-08
MODIFIED BY: _____ DATE: _____
CHECKED BY: _____ DATE: _____
FILE SPEC.: kkempf\english\bridge approach fills.dgn

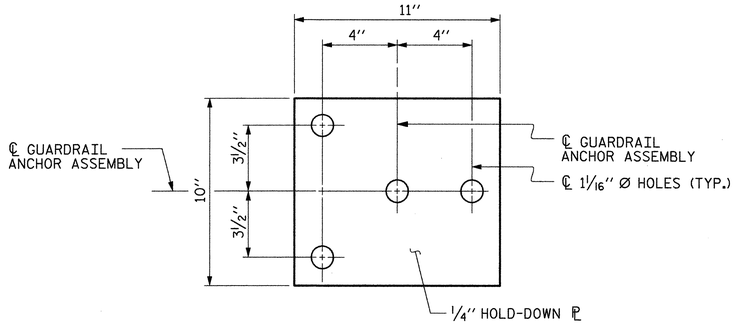

PLAN

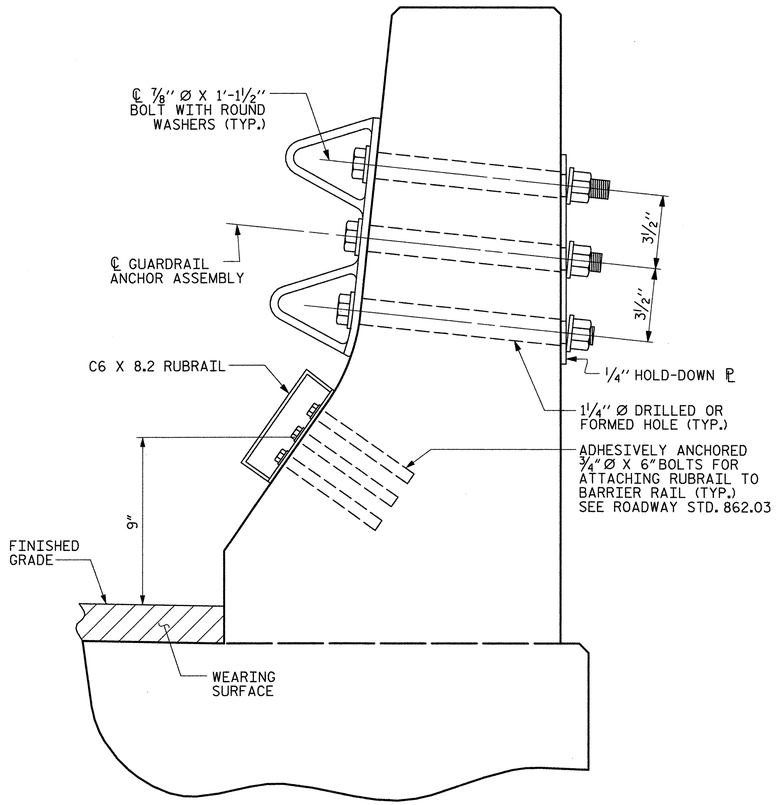

SECTION E-E

GUARDRAIL ANCHOR ASSEMBLY DETAILS

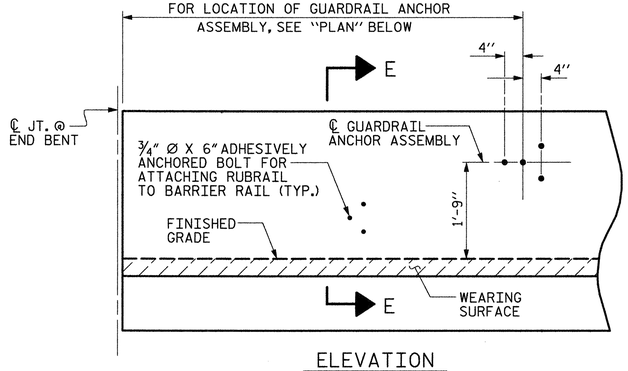

ELEVATION

FOR LOCATION OF RUBRAIL, SEE ROADWAY STD. 862.03

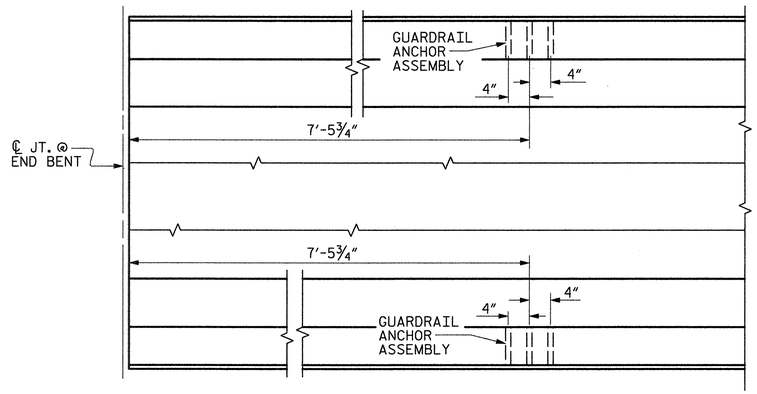

PLAN

LOCATION OF ANCHORS FOR GUARDRAIL

END BENT #1 SHOWN, END BENT #2 SIMILAR.

NOTES

THE GUARDRAIL ANCHOR ASSEMBLY SHALL CONSIST OF A 1/4 '' HOLD DOWN PLATE AND 4 - 7/8 '' Ø BOLTS WITH NUTS AND WASHERS, RUBRAIL, AND ADHESIVELY ANCHORED BOLTS.

THE HOLD-DOWN PLATE SHALL CONFORM TO AASHTO M270 GRADE 36. AFTER FABRICATION, THE HOLD-DOWN PLATE SHALL BE HOT-DIP GALVANIZED IN ACCORDANCE WITH AASHTO M111.

BOLTS SHALL CONFORM TO THE REQUIREMENTS OF ASTM A307 AND NUTS SHALL CONFORM TO THE REQUIREMENTS OF AASHTO M291. BOLTS, NUTS AND WASHERS SHALL BE GALVANIZED. (AT THE CONTRACTOR'S OPTION, STAINLESS STEEL BOLTS, NUTS AND WASHERS MAY BE USED AS AN ALTERNATE FOR THE 7/8 '' Ø GALVANIZED BOLTS,

NUTS AND WASHERS. THEY SHALL CONFORM TO OR EXCEED THE MECHANICAL REQUIREMENTS OF ASTM A307. THE USE OF THIS ALTERNATE SHALL BE APPROVED BY THE ENGINEER.)

THE GUARDRAIL ANCHOR ASSEMBLY IS REQUIRED AT ALL POINTS WHERE APPROACH GUARDRAIL IS TO BE ATTACHED TO THE END OF BARRIER RAIL. FOR POINTS OF ATTACHMENT, SEE SKETCH.

AFTER INSTALLATION, THE EXPOSED THREAD OF THE BOLT SHALL BE BURRED WITH A SHARP POINTED TOOL.

THE COST OF THE GUARDRAIL ANCHOR ASSEMBLY SHALL BE INCLUDED IN THE LUMP SUM BID PRICE FOR STEEL BEAM GUARDRAIL.

THE 1 1/4 '' Ø HOLES SHALL BE FORMED OR DRILLED WITH A CORE BIT. IMPACT TOOLS WILL NOT BE PERMITTED. ANY CONCRETE DAMAGED BY THIS WORK SHALL BE REPAIRED TO THE SATISFACTION OF THE ENGINEER.

THE C6 X 8.2 RUBRAIL IS TO BE ADHESIVELY ANCHORED TO THE RAIL USING THREE 3/4 "Ø X 6"BOLTS WITH WASHERS. LEVEL ONE FIELD TESTING IS REQUIRED, AND THE YIELD LOAD OF THE 3/4 "Ø BOLT IS 12 KIPS. FOR ADHESIVELY ANCHORED ANCHOR BOLTS OR DOWELS, SEE SPECIAL PROVISIONS. SEE ROADWAY STANDARD 862.03 FOR DETAILS AND LOCATION OF THE RUBRAIL.

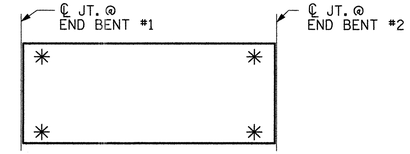

SKETCH SHOWING POINTS OF ATTACHMENTS

✳ DENOTES GUARDRAIL ANCHOR ASSEMBLY

PROJECT NO. 42814

BRUNSWICK COUNTY

STATION: 14+76.30 -L-

REPLACES BRIDGE NO. 59

STATE OF NORTH CAROLINA
DEPARTMENT OF TRANSPORTATION
RALEIGH
STANDARD

GUARDRAIL ANCHORAGE FOR BARRIER RAIL

STD. NO. GRA2

REVISIONS						SHEET NO.
NO.	BY:	DATE:	NO.	BY:	DATE:	16
1			3			TOTAL SHEETS
2			4			37

THIS STANDARD DRAWING REVIEWED & ADOPTED FOR USE AT THE REFERENCED LOCATION BY THE UNDERSIGNED:

NORTH CAROLINA PROFESSIONAL SEAL 19661 ENGINEER L. KEVIN AUSTIN 5/11/10

PLANS PREPARED BY:

MULKEY
ENGINEERS & CONSULTANTS
PO Box 33127
RALEIGH, N.C. 27636
(919) 851-1912
(919) 851-1918 (FAX)
WWW.MULKEYINC.COM

ASSEMBLED BY : W. B. ALLEN	DATE : 12/09	ADDED 5/1/06R KMM/GM	
CHECKED BY : L. K. AUSTIN	DATE : 2/10		
DRAWN BY : TLA 5/06			
CHECKED BY : GM 5/06			

5/10/2010 2:43:37 PM R:\Structures\B5217_SD_GR_0.dgn

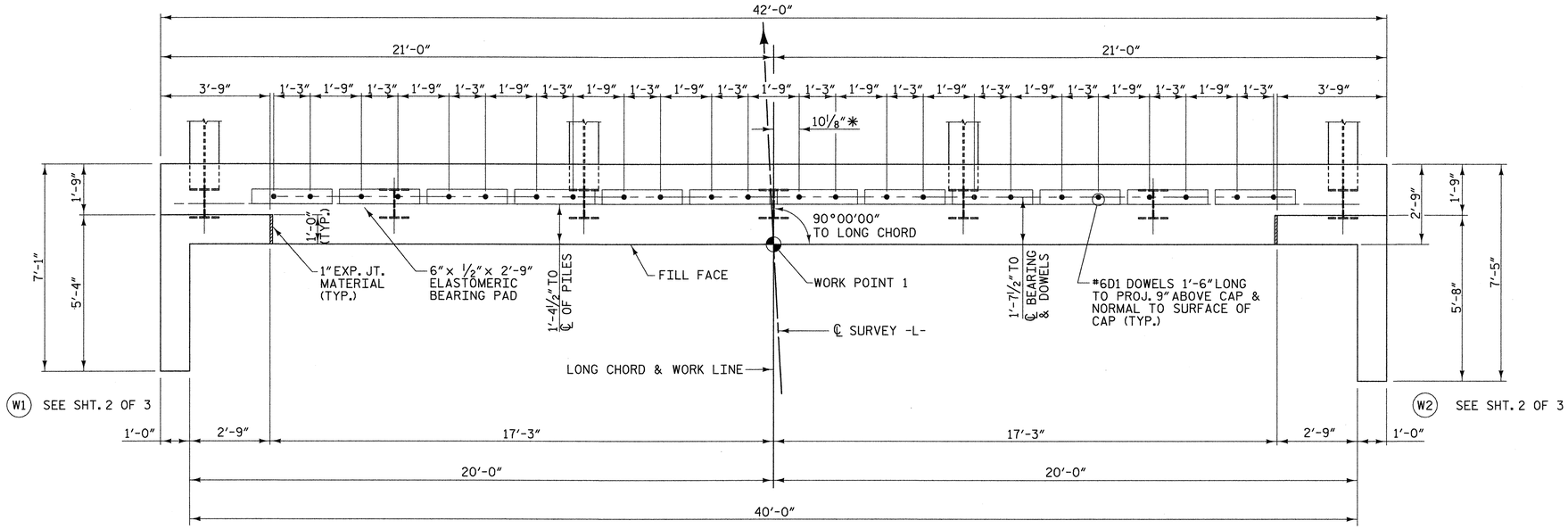

PLAN

NOTES

STIRRUPS IN CAP MAY BE SHIFTED AS NECESSARY TO CLEAR #6D1 DOWELS.

ALL REINFORCING STEEL SHALL BE EPOXY COATED.

FOR DOWEL DETAIL, SEE SHEET 3 OF 3.

* MEASURED ALONG SURFACE OF CAP.

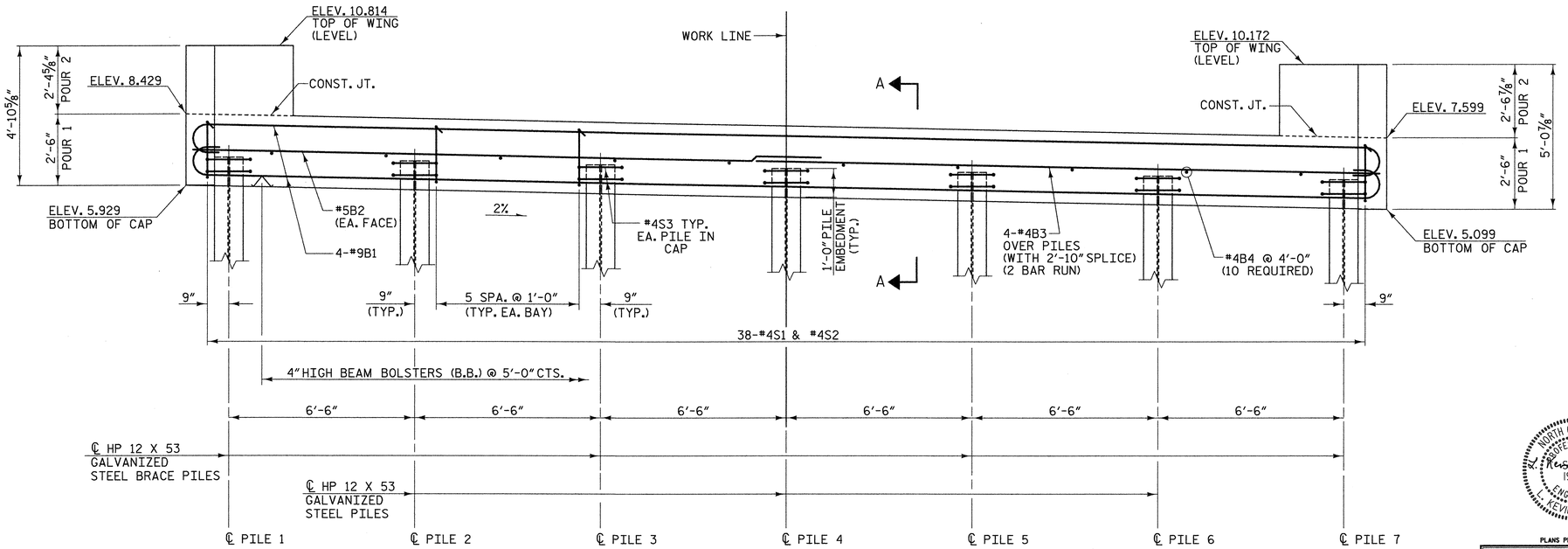

ELEVATION

PILE CUT OFF ELEVATIONS	
PILE	ELEVATION
1	6.919
2	6.789
3	6.659
4	6.529
5	6.399
6	6.269
7	6.139

PROJECT NO. 42814

BRUNSWICK COUNTY

STATION: 14+76.30 -L-

REPLACES BRIDGE NO. 59 SHEET 1 OF 3

STATE OF NORTH CAROLINA
DEPARTMENT OF TRANSPORTATION
RALEIGH

SUBSTRUCTURE END BENT 1

33' CLEAR ROADWAY - 90°SKEW

NORTH CAROLINA PROFESSIONAL SEAL 19661 ENGINEER L. KEVIN AUSTIN 5/11/10

PLANS PREPARED BY:

MULKEY
ENGINEERS & CONSULTANTS
PO Box 33127
RALEIGH, N.C. 27636
(919) 851-1912
(919) 851-1918 (FAX)
WWW.MULKEYINC.COM

REVISIONS					
NO.	BY:	DATE:	NO.	BY:	DATE:
1			3		
2			4		

SHEET NO. 17

TOTAL SHEETS 37

DRAWN BY : W. B. ALLEN DATE : 12/09
CHECKED BY : L. K. AUSTIN DATE : 2/10

5/10/2010 2:49:48 PM R:\Structures\B5207_SD_EL01.dgn

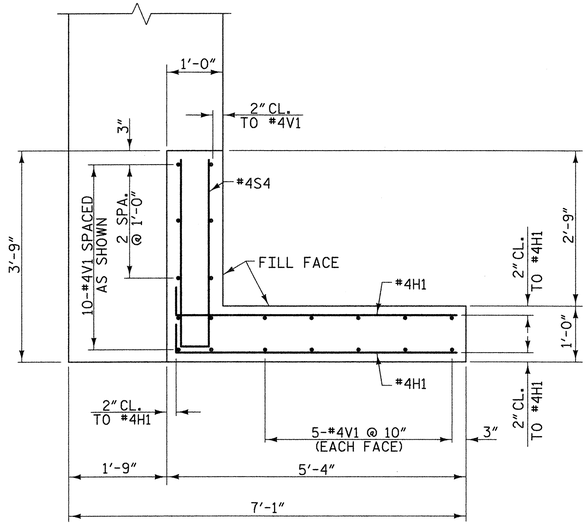

W1 PLAN OF LEFT WING

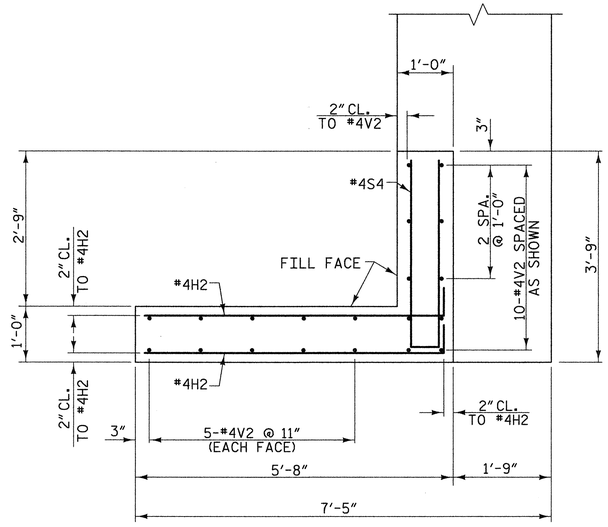

W2 PLAN OF RIGHT WING

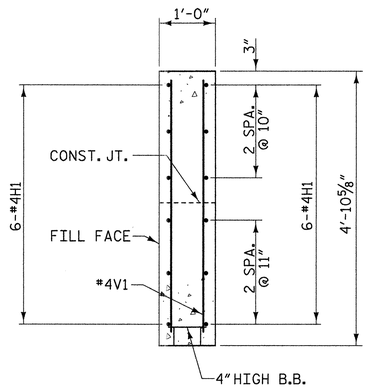

SECTION X-X

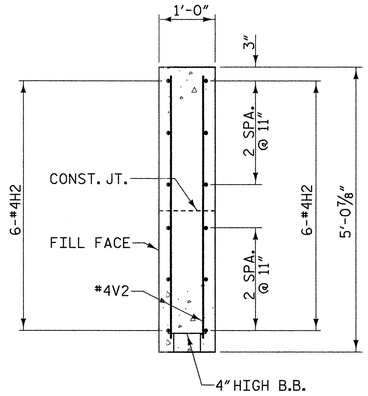

SECTION Y-Y

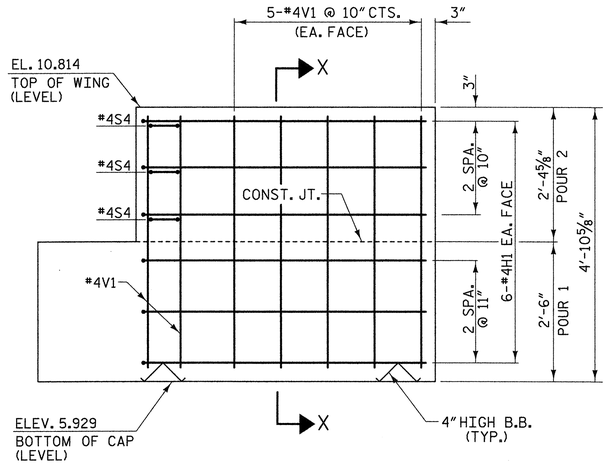

W1 ELEVATION OF LEFT WING

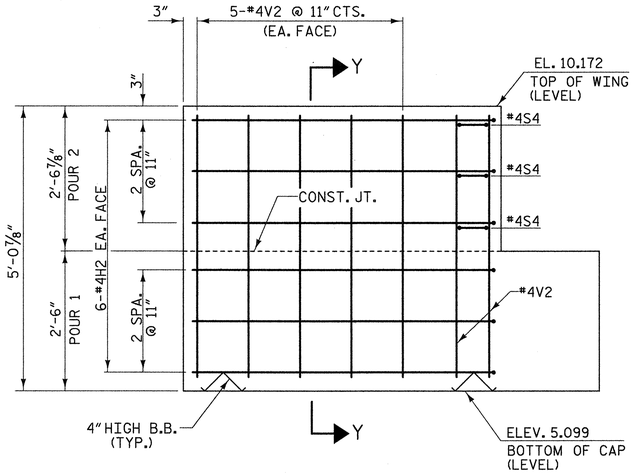

W2 ELEVATION OF RIGHT WING

PROJECT NO. 42814

BRUNSWICK COUNTY

STATION: 14+76.30 -L-

REPLACES BRIDGE NO. 59 SHEET 2 OF 3

STATE OF NORTH CAROLINA
DEPARTMENT OF TRANSPORTATION
RALEIGH

SUBSTRUCTURE END BENT 1

33' CLEAR ROADWAY - 90°SKEW

NORTH CAROLINA PROFESSIONAL ENGINEER SEAL 19661 L. KEVIN AUSTIN 5/11/10

PLANS PREPARED BY:

MULKEY ENGINEERS & CONSULTANTS
PO Box 33127
RALEIGH, N.C. 27636
(919) 851-1918
(919) 851-1918 (FAX)
WWW.MULKEYINC.COM

REVISIONS					
NO.	BY:	DATE:	NO.	BY:	DATE:
1			3		
2			4		

SHEET NO. 18

TOTAL SHEETS 37

DRAWN BY : W. B. ALLEN DATE : 12/09
CHECKED BY : L. K. AUSTIN DATE : 2/10

5/10/2010 2:50:48 PM R:\Structures\B5217_SD_EL_02.dgn

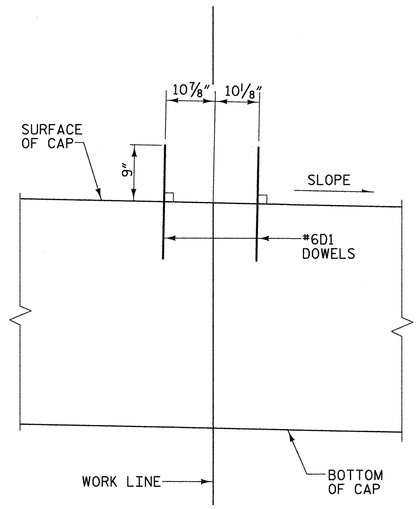

DOWEL DETAIL

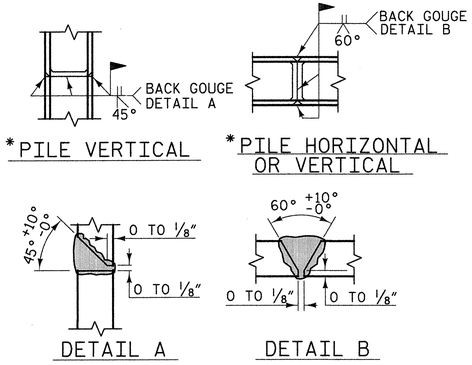

PILE SPLICE DETAILS

*POSITION OF PILE DURING WELDING.

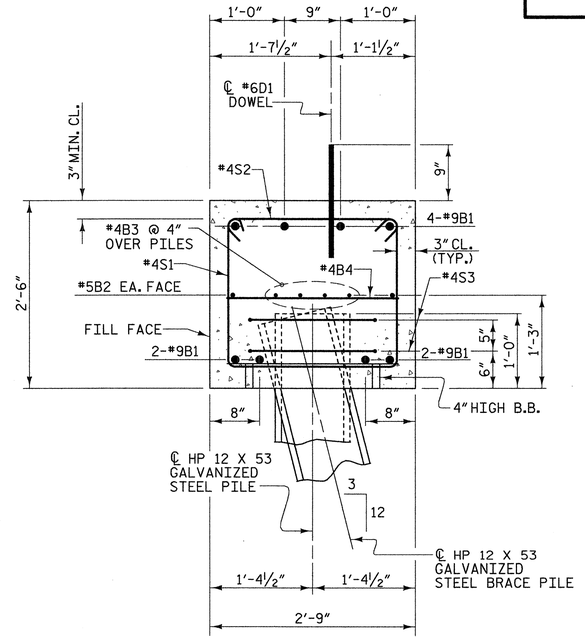

SECTION A-B

BAR TYPES

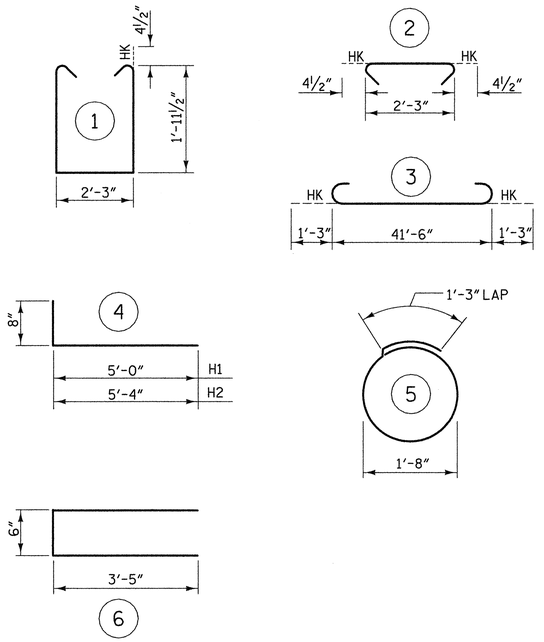

ALL BAR DIMENSIONS ARE OUT TO OUT

BILL OF MATERIAL

FOR END BENT 1

BAR	NO.	SIZE	TYPE	LENGTH	WEIGHT
B1	8	#9	3	44'-0"	1197
B2	2	#5	STR	41'-6"	87
B3	8	#4	STR	22'-2"	118
B4	10	#4	STR	2'-3"	15
D1	24	#6	STR	1'-6"	54
H1	12	#4	4	5'-8"	45
H2	12	#4	4	6'-0"	48
S1	38	#4	1	6'-11"	176
S2	38	#4	2	3'-0"	76
S3	14	#4	5	6'-6"	61
S4	6	#4	6	7'-4"	29
V1	20	#4	STR	4'-6"	60
V2	20	#4	STR	4'-8"	62

TOTAL REINFORCING STEEL =	2028 lbs.
CLASS "A" CONCRETE - CU. YARDS	
POUR 1	11.5 cu. yds.
POUR 2	1.5 cu. yds.
TOTAL	13.0 cu. yds.
HP 12 X 53 GALVANIZED STEEL PILES	
7 PILES REQUIRED - LIN. FEET	385
STEEL PILE POINTS	7 EA.

PROJECT NO. 42814

BRUNSWICK COUNTY

STATION: 14+76.30 -L-

REPLACES BRIDGE NO. 59 SHEET 3 OF 3

STATE OF NORTH CAROLINA
DEPARTMENT OF TRANSPORTATION
RALEIGH

SUBSTRUCTURE END BENT 1

33' CLEAR ROADWAY - 90°SKEW

NORTH CAROLINA PROFESSIONAL SEAL 19661 ENGINEER L. KEVIN AUSTIN
5/11/10

PLANS PREPARED BY:

MULKEY
ENGINEERS & CONSULTANTS
PO Box 33127
RALEIGH, N.C. 27636
(919) 851-1912
(919) 851-1918 (FAX)
WWW.MULKEYINC.COM

REVISIONS						SHEET NO.
NO.	BY:	DATE:	NO.	BY:	DATE:	19
1			3			TOTAL SHEETS
2			4			37

DRAWN BY : W. B. ALLEN DATE : 12/09
CHECKED BY : L. K. AUSTIN DATE : 2/10

5/10/2010 2:54:12 PM R:\Structures\B5217_SD_EL03.dgn

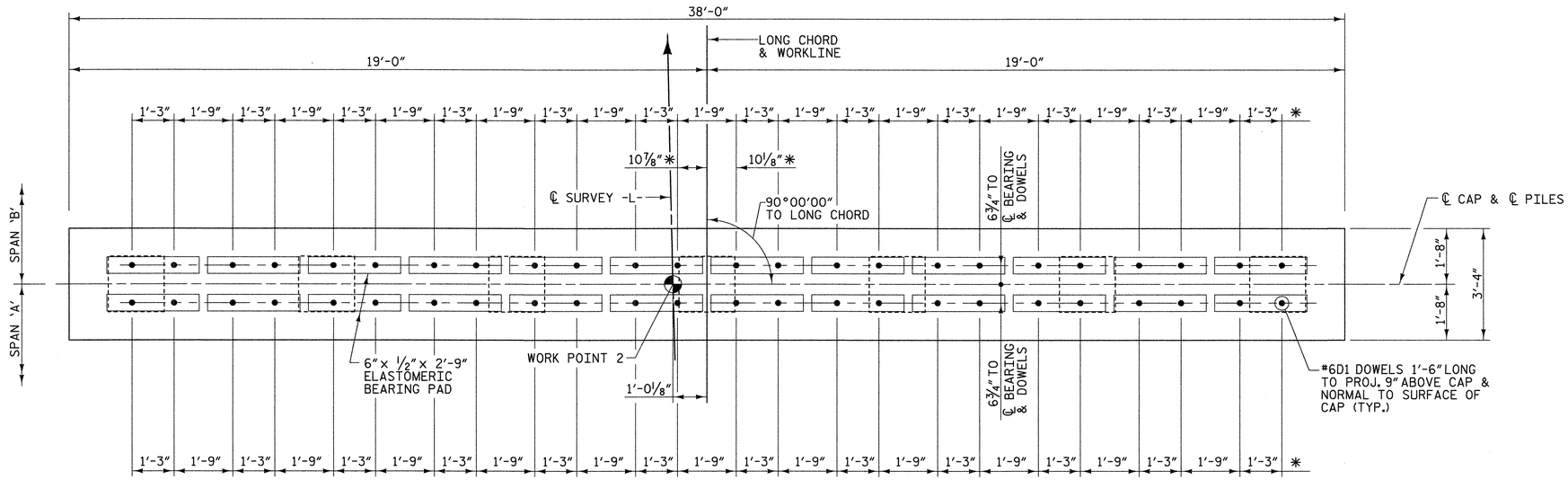

PLAN

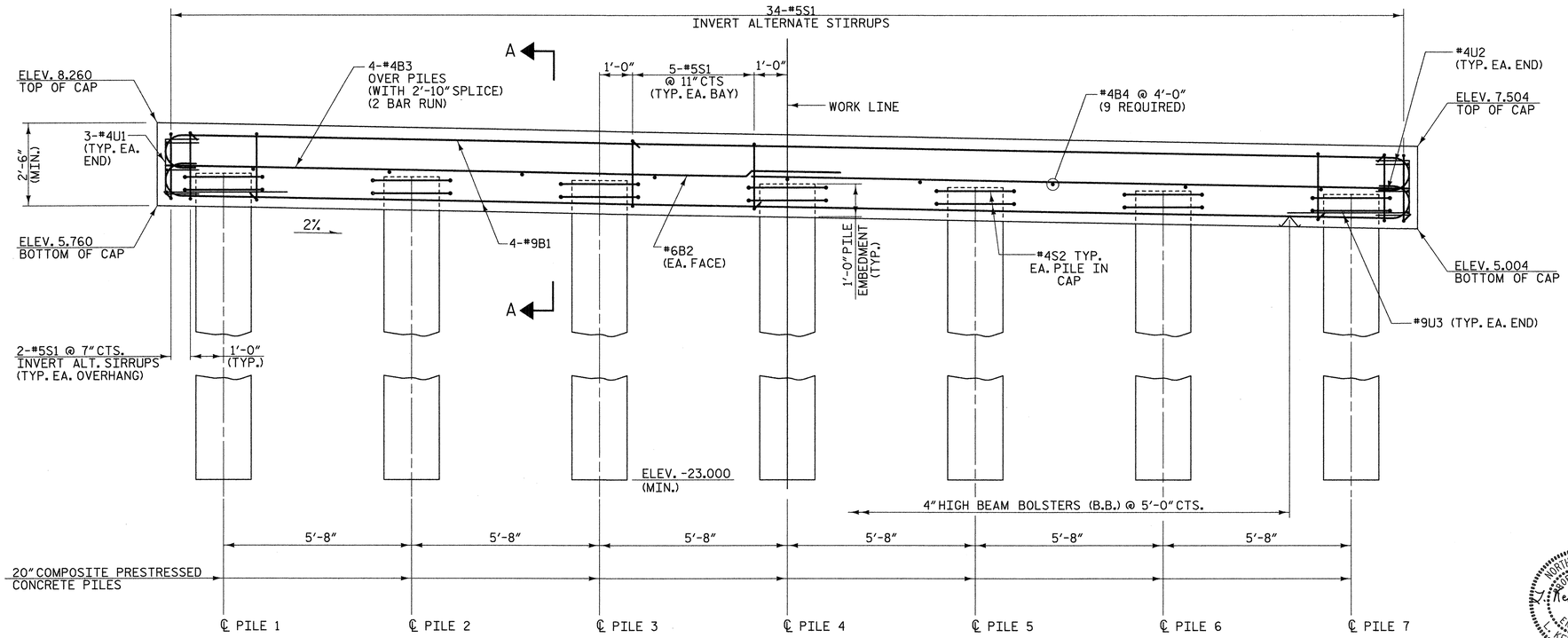

ELEVATION

NOTES

STIRRUPS IN CAP MAY BE SHIFTED AS NECESSARY TO CLEAR #6D1 DOWELS.

ALL REINFORCING STEEL SHALL BE EPOXY COATED.

FOR DOWEL DETAIL, SEE END BENT 1 SHEET 3 OF 3.

* MEASURED ALONG SURFACE OF CAP

PILE CUT-OFF ELEVATIONS	
PILE NO.	ELEV.
1	6.741
2	6.627
3	6.514
4	6.401
5	6.287
6	6.174
7	6.061

PROJECT NO. 42814

BRUNSWICK COUNTY

STATION: 14+76.30 -L-

REPLACES BRIDGE NO. 59 SHEET 1 OF 2

STATE OF NORTH CAROLINA
DEPARTMENT OF TRANSPORTATION
RALEIGH

SUBSTRUCTURE BENT 1

33' CLEAR ROADWAY - 90°SKEW

NORTH CAROLINA PROFESSIONAL SEAL 1966 ENGINEER L. KEVIN AUSTIN 5/11/10

PLANS PREPARED BY:

MULKEY
ENGINEERS & CONSULTANTS
PO Box 33127
RALEIGH, N.C. 27636
(919) 851-1912
(919) 851-1918 (FAX)
WWW.MULKEYINC.COM

REVISIONS						SHEET NO.
NO.	BY:	DATE:	NO.	BY:	DATE:	20
1			3			TOTAL SHEETS
2			4			37

DRAWN BY : W. B. ALLEN DATE : 12/09
CHECKED BY : L. K. AUSTIN DATE : 2/10

5/10/2010 26:48 PM R:\Structures\B5217_SD_B1_01.dgn

BAR TYPES

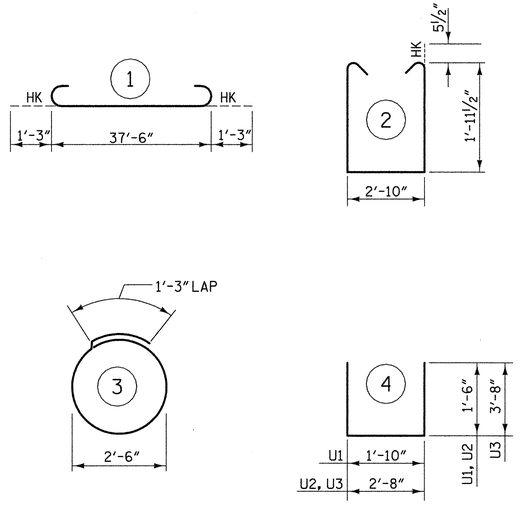

ALL BAR DIMENSIONS ARE OUT TO OUT

BILL OF MATERIAL

FOR BENT 1

BAR	NO.	SIZE	TYPE	LENGTH	WEIGHT
B1	8	#9	1	40'-0"	1088
B2	2	#6	STR	37'-6"	113
B3	8	#4	STR	20'-2"	108
B4	9	#4	STR	2'-10"	17
D1	48	#6	STR	1'-6"	108
S1	34	#5	2	7'-8"	272
S2	14	#4	3	9'-2"	86
U1	6	#4	4	4'-10"	19
U2	4	#4	4	5'-8"	15
U3	2	#9	4	10'-0"	68

TOTAL EPOXY COATED REINFORCING STEEL = 1894 lbs.

CLASS "A" CONCRETE - CU. YARDS 11.1

20" COMPOSITE PRESTRESSED CONC. PILES
7 PILES REQUIRED - LIN. FEET 385

STEEL PILE POINTS 7 EA.

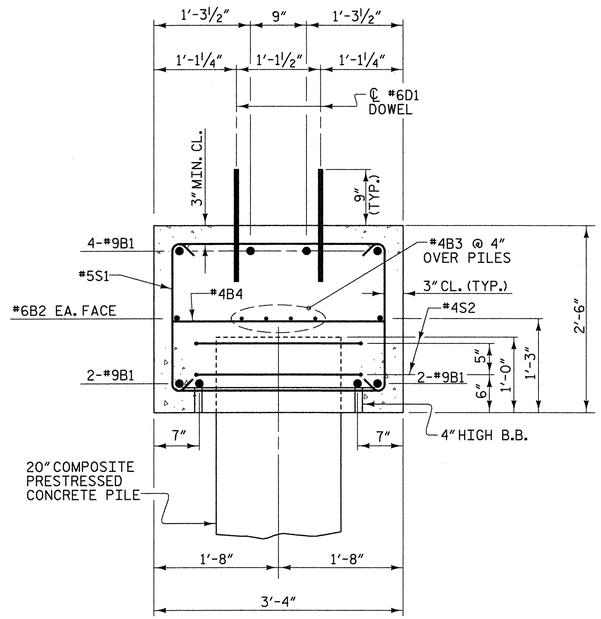

SECTION A-A

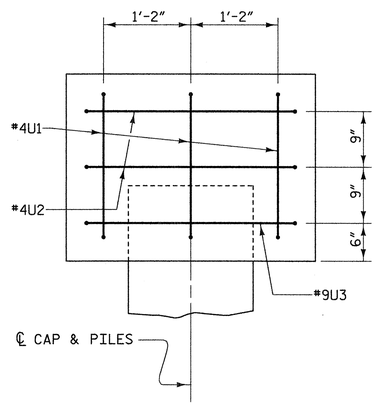

END VIEW

(TYPICAL BOTH ENDS)

PROJECT NO. 42814

BRUNSWICK COUNTY

STATION: 14+76.30 -L-

REPLACES BRIDGE NO. 59 SHEET 2 OF 2

STATE OF NORTH CAROLINA
DEPARTMENT OF TRANSPORTATION
RALEIGH

SUBSTRUCTURE BENT 1

33' CLEAR ROADWAY - 90°SKEW

NORTH CAROLINA PROFESSIONAL ENGINEER L. KEVIN AUSTIN 1966 5/11/10

PLANS PREPARED BY:

MULKEY
ENGINEERS & CONSULTANTS
PO Box 33127
RALEIGH, N.C. 27636
(919) 851-1918
(919) 851-1918 (FAX)
WWW.MULKEYINC.COM

REVISIONS						SHEET NO.
NO.	BY:	DATE:	NO.	BY:	DATE:	21
1			3			TOTAL SHEETS
2			4			37

DRAWN BY : W. B. ALLEN DATE : 12/09
CHECKED BY : L. K. AUSTIN DATE : 2/10

5/10/2010 2:52:23 PM R:\Structures\B5217_SD_BI_02.dgn

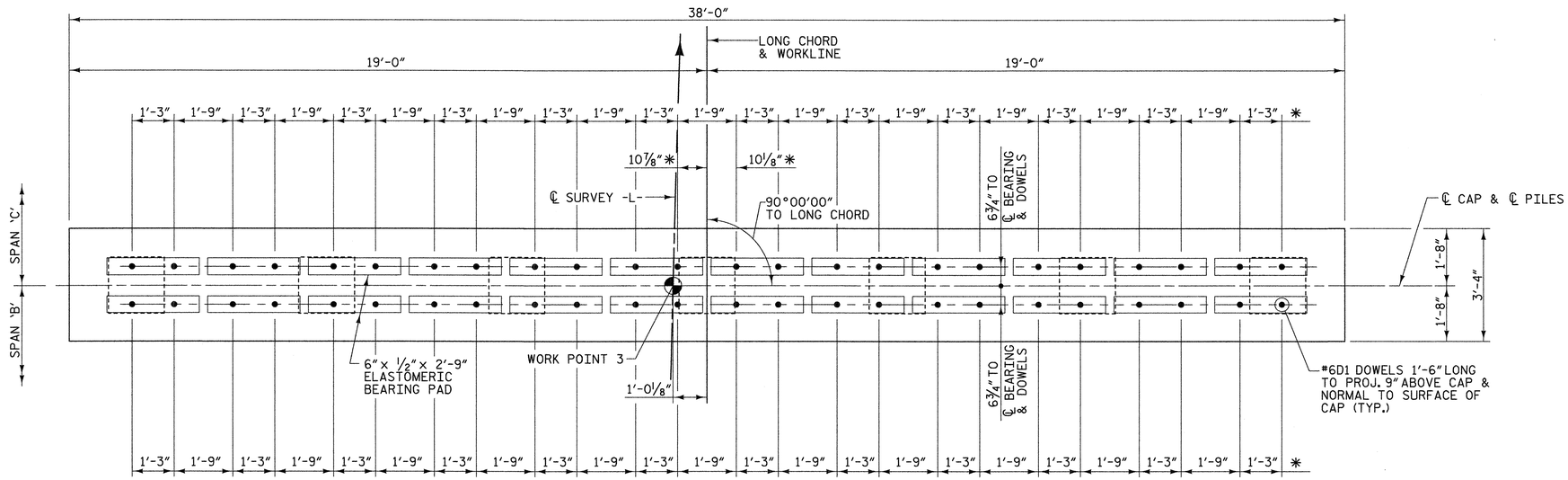

PLAN

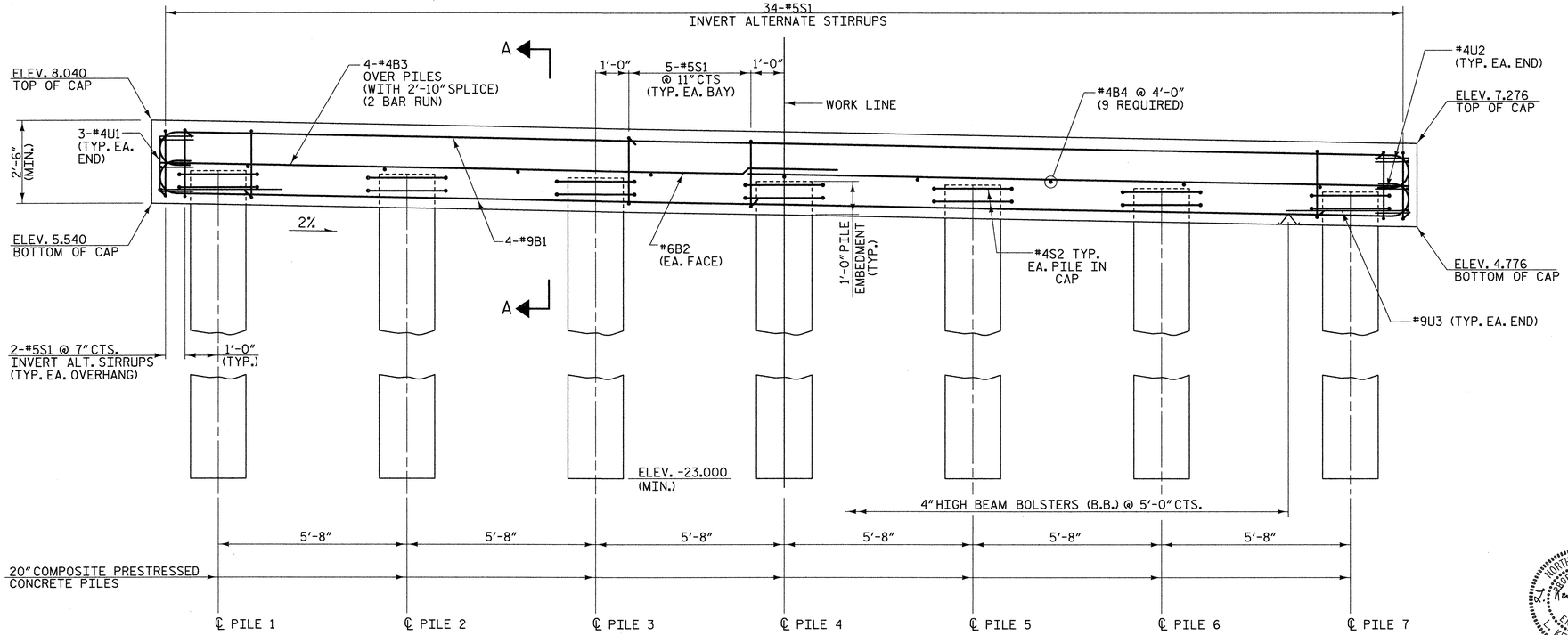

ELEVATION

NOTES

STIRRUPS IN CAP MAY BE SHIFTED AS NECESSARY TO CLEAR #6D1 DOWELS.

ALL REINFORCING STEEL SHALL BE EPOXY COATED.

FOR DOWEL DETAIL, SEE END BENT 1 SHEET 3 OF 3.

* MEASURED ALONG SURFACE OF CAP

PILE CUT-OFF ELEVATIONS	
PILE NO.	ELEV.
1	6.513
2	6.399
3	6.287
4	6.173
5	6.059
6	5.947
7	5.833

PROJECT NO. 42814

BRUNSWICK COUNTY

STATION: 14+76.30 -L-

REPLACES BRIDGE NO. 59 SHEET 1 OF 2

STATE OF NORTH CAROLINA
DEPARTMENT OF TRANSPORTATION
RALEIGH

SUBSTRUCTURE BENT 2

33' CLEAR ROADWAY - 90°SKEW

NORTH CAROLINA PROFESSIONAL ENGINEER SEAL 19661 L. KEVIN AUSTIN 5/11/10

PLANS PREPARED BY:

MULKEY ENGINEERS & CONSULTANTS
PO Box 33127
RALEIGH, N.C. 27636
(919) 851-1912
(919) 851-1918 (FAX)
WWW.MULKEYINC.COM

REVISIONS						SHEET NO.
NO.	BY:	DATE:	NO.	BY:	DATE:	22
1			3			TOTAL SHEETS
2			4			37

DRAWN BY : W. B. ALLEN DATE : 12/09
CHECKED BY : L. K. AUSTIN DATE : 2/10

5/10/2010 2:52:48 PM R:\Structures\B5207_SD_B2_0.dgn

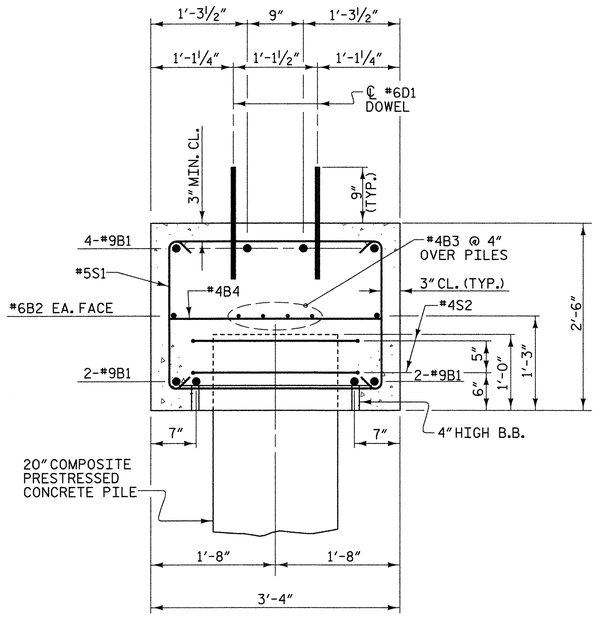

SECTION A-A

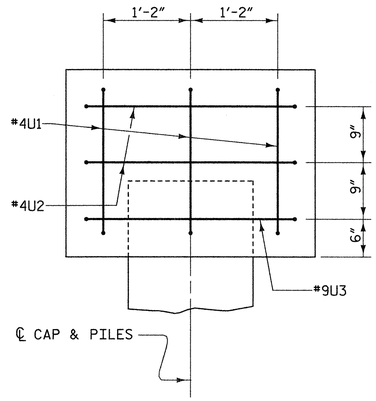

END VIEW

(TYPICAL BOTH ENDS)

BAR TYPES

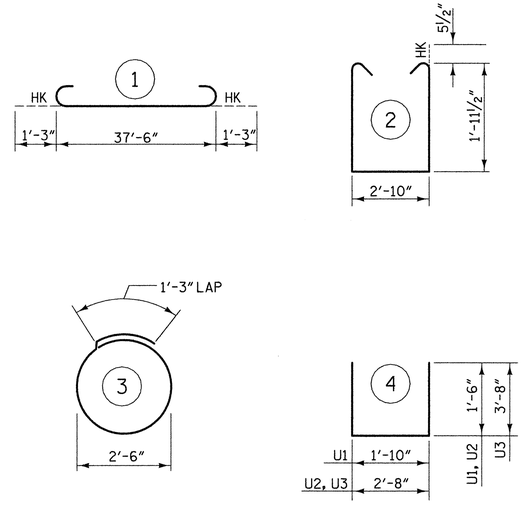

ALL BAR DIMENSIONS ARE OUT TO OUT

BILL OF MATERIAL

FOR BENT 2

BAR	NO.	SIZE	TYPE	LENGTH	WEIGHT
B1	8	#9	1	40'-0"	1088
B2	2	#6	STR	37'-6"	113
B3	8	#4	STR	20'-2"	108
B4	9	#4	STR	2'-10"	17
D1	48	#6	STR	1'-6"	108
S1	34	#5	2	7'-8"	272
S2	14	#4	3	9'-2"	86
U1	6	#4	4	4'-10"	19
U2	4	#4	4	5'-8"	15
U3	2	#9	4	10'-0"	68

TOTAL EPOXY COATED REINFORCING STEEL =	1894 lbs.
CLASS "A" CONCRETE - CU. YARDS	11.1
20" COMPOSITE PRESTRESSED CONC. PILES	
7 PILES REQUIRED - LIN. FEET	385
STEEL PILE POINTS	7 EA.

PROJECT NO. 42814

BRUNSWICK COUNTY

STATION: 14+76.30 -L-

REPLACES BRIDGE NO. 59

SHEET 2 OF 2

NORTH CAROLINA PROFESSIONAL ENGINEER SEAL 19661 L. KEVIN AUSTIN 5/11/10

PLANS PREPARED BY:

MULKEY
ENGINEERS & CONSULTANTS
PO BOX 33127
RALEIGH, N.C. 27636
(919) 851-1915
(919) 851-1918 (FAX)
WWW.MULKEYINC.COM

STATE OF NORTH CAROLINA
DEPARTMENT OF TRANSPORTATION
RALEIGH

SUBSTRUCTURE BENT 2

33' CLEAR ROADWAY - 90°SKEW

REVISIONS						SHEET NO.
NO.	BY:	DATE:	NO.	BY:	DATE:	23
1			3			TOTAL SHEETS
2			4			37

DRAWN BY : W. B. ALLEN DATE : 12/09
CHECKED BY : L. K. AUSTIN DATE : 2/10

5/10/2010 2:53:12 PM R:\Structures\B5207_SD_B2_02.dgn

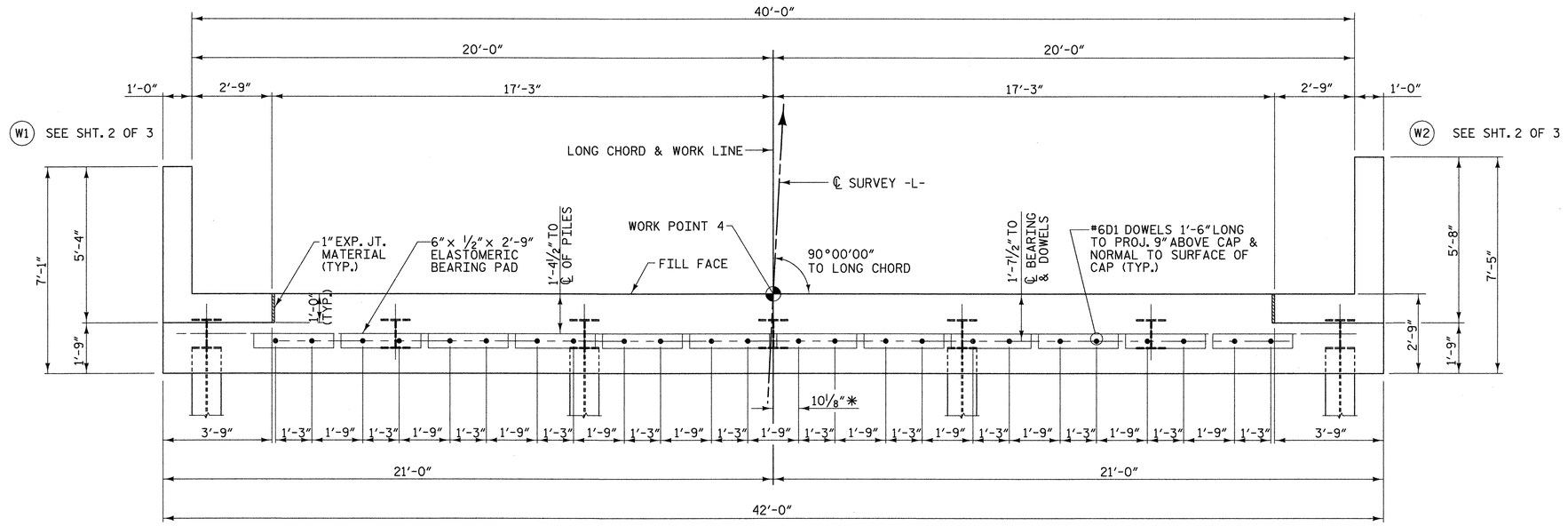

PLAN

NOTES

STIRRUPS IN CAP MAY BE SHIFTED AS NECESSARY TO CLEAR #6D1 DOWELS.

ALL REINFORCING STEEL SHALL BE EPOXY COATED.

FOR PILE SPLICE DETAIL, SEE END BENT 1 SHEET 3 OF 3.

FOR DOWEL DETAIL, SEE END BENT 1 SHEET 3 OF 3.

* MEASURED ALONG SURFACE OF CAP.

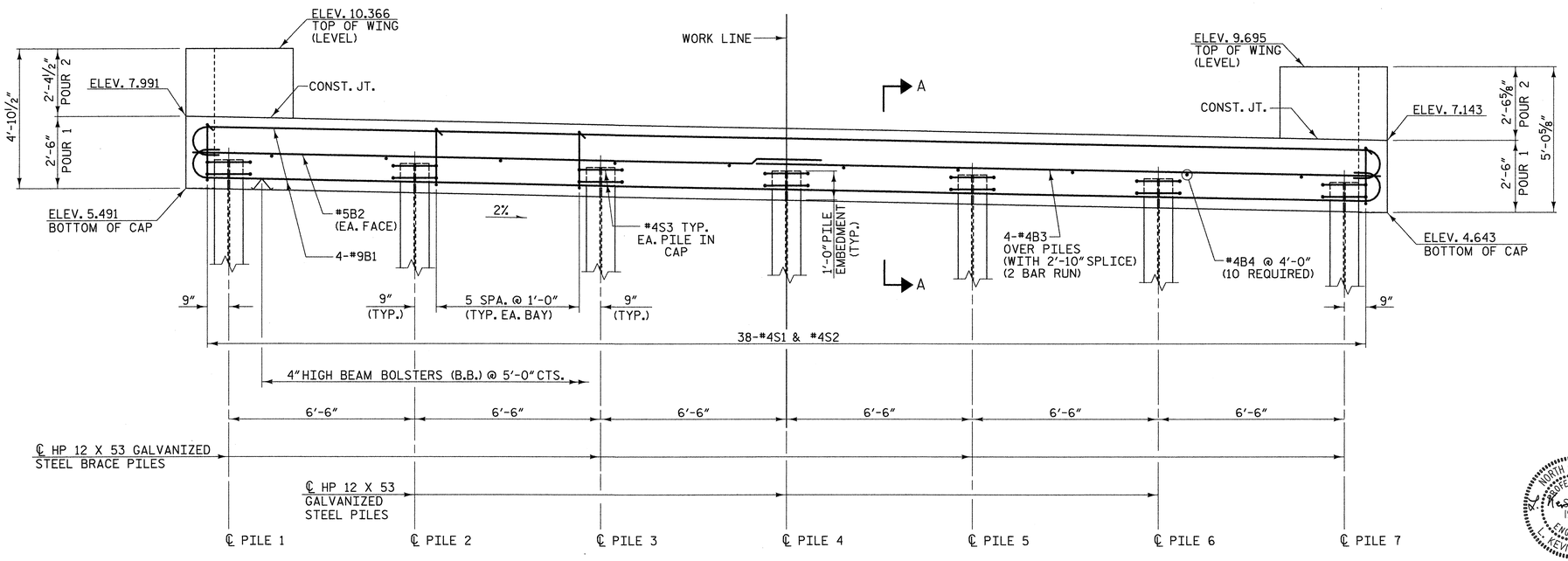

ELEVATION

PILE CUT OFF ELEVATIONS

PILE	ELEVATION
1	6.463
2	6.333
3	6.203
4	6.073
5	5.943
6	5.813
7	5.683

PROJECT NO. 42814

BRUNSWICK COUNTY

STATION: 14+76.30 -L-

REPLACES BRIDGE NO. 59 SHEET 1 OF 3

STATE OF NORTH CAROLINA
DEPARTMENT OF TRANSPORTATION
RALEIGH

SUBSTRUCTURE END BENT 2

33' CLEAR ROADWAY - 90°SKEW

NORTH CAROLINA PROFESSIONAL SEAL 19667 ENGINEER KEVIN AUSTIN 5/11/10

PLANS PREPARED BY:

MULKEY
ENGINEERS & CONSULTANTS
PO BOX 33127
RALEIGH, N.C. 27636
(919) 851-1647
(919) 851-1915 (FAX)
WWW.MULKEYINC.COM

REVISIONS						SHEET NO.
NO.	BY:	DATE:	NO.	BY:	DATE:	24
1			3			TOTAL SHEETS
2			4			37

DRAWN BY : W. B. ALLEN DATE : 12/09
CHECKED BY : L. K. AUSTIN DATE : 2/10

5/0/2000 3:44:46 PM R:\Structures\B5217_SD_E2_0.dgn

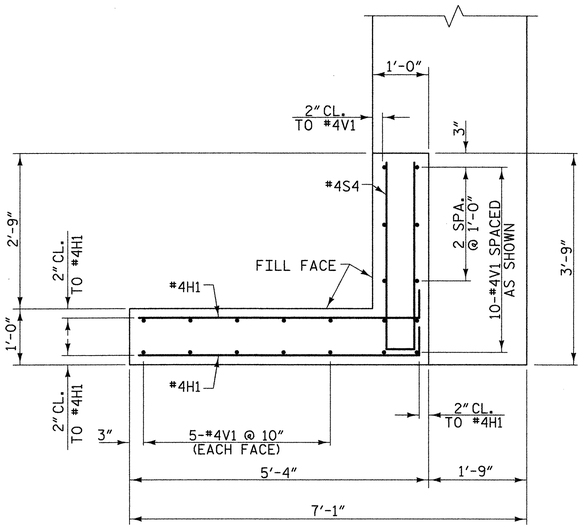

W1 PLAN OF LEFT WING

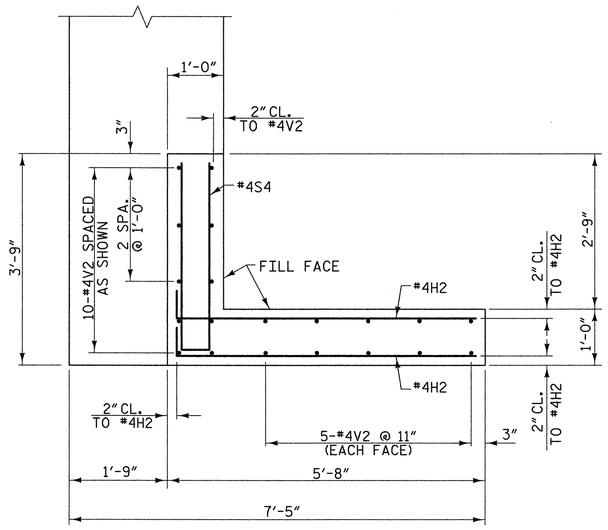

W2 PLAN OF RIGHT WING

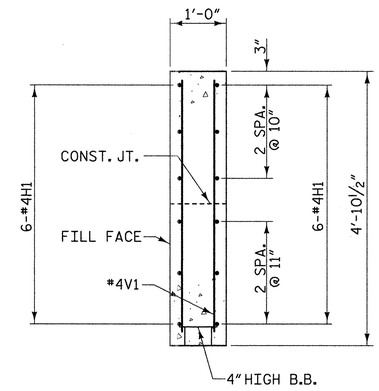

SECTION X-X

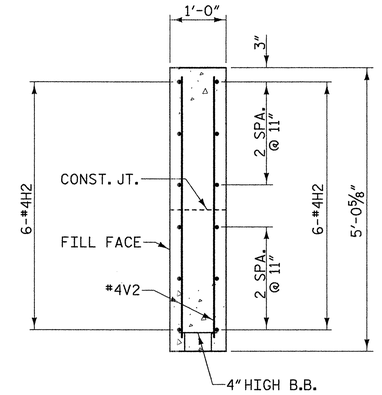

SECTION Y-Y

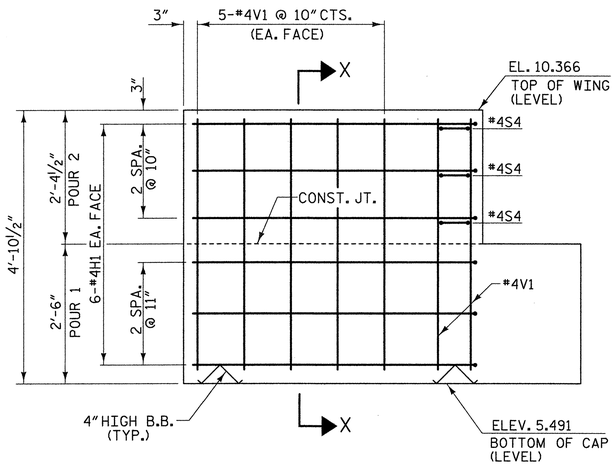

W1 ELEVATION OF LEFT WING

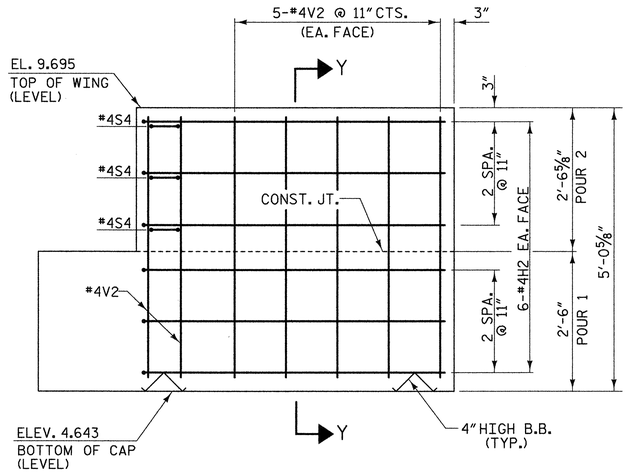

W2 ELEVATION OF RIGHT WING

PROJECT NO. 42814

BRUNSWICK COUNTY

STATION: 14+76.30 -L-

REPLACES BRIDGE NO. 59 SHEET 2 OF 3

STATE OF NORTH CAROLINA
DEPARTMENT OF TRANSPORTATION
RALEIGH

SUBSTRUCTURE END BENT 2

33' CLEAR ROADWAY - 90°SKEW

NORTH CAROLINA PROFESSIONAL SEAL 19661 ENGINEER L. KEVIN AUSTIN
5/11/10

PLANS PREPARED BY:

MULKEY
ENGINEERS & CONSULTANTS
PO Box 33127
RALEIGH, N.C. 27636
(919) 851-1913
(919) 851-1918 (FAX)
WWW.MULKEYINC.COM

REVISIONS					
NO.	BY:	DATE:	NO.	BY:	DATE:
1			3		
2			4		

SHEET NO. 25

TOTAL SHEETS 37

DRAWN BY : W. B. ALLEN DATE : 12/09
CHECKED BY : L. K. AUSTIN DATE : 2/10

5/10/2010 2:53:43 PM R:\Structures\B5207_SD_E2_02.dgn

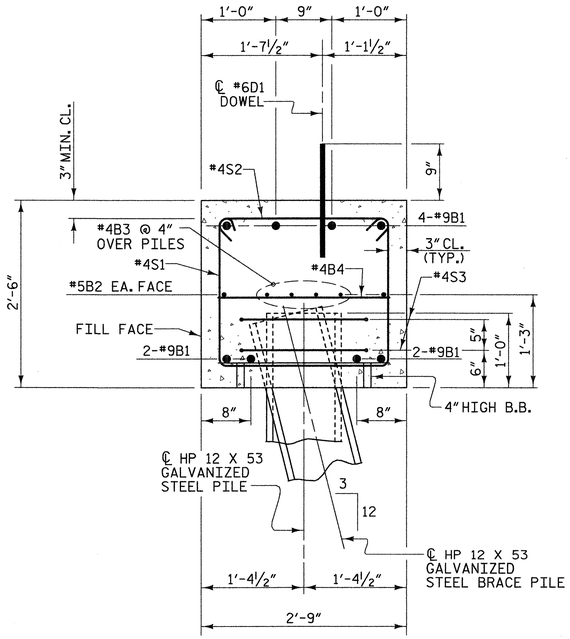

SECTION A-A

BAR TYPES

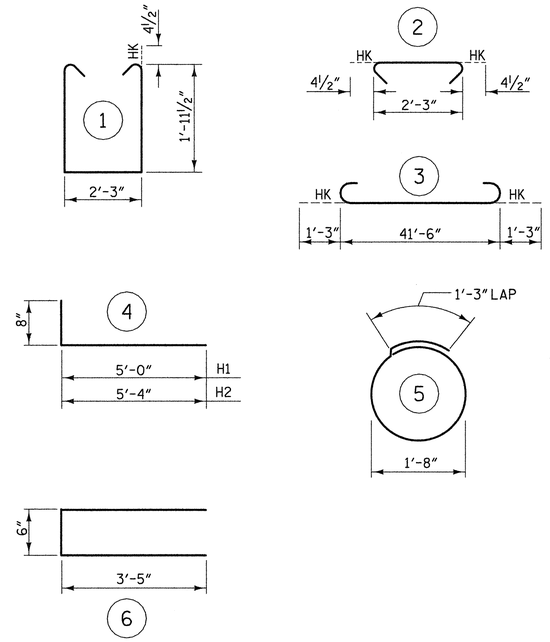

ALL BAR DIMENSIONS ARE OUT TO OUT

BILL OF MATERIAL

FOR END BENT 2

BAR	NO.	SIZE	TYPE	LENGTH	WEIGHT
B1	8	#9	3	44'-0"	1197
B2	2	#5	STR	41'-6"	87
B3	8	#4	STR	22'-2"	118
B4	10	#4	STR	2'-3"	15
D1	24	#6	STR	1'-6"	54
H1	12	#4	4	5'-8"	45
H2	12	#4	4	6'-0"	48
S1	38	#4	1	6'-11"	176
S2	38	#4	2	3'-0"	76
S3	14	#4	5	6'-6"	61
S4	6	#4	6	7'-4"	29
V1	20	#4	STR	4'-6"	60
V2	20	#4	STR	4'-8"	62

TOTAL REINFORCING STEEL =	2028 lbs.
CLASS "A" CONCRETE - CU. YARDS	
POUR 1	11.5 cu. yds.
POUR 2	1.5 cu. yds.
TOTAL	13.0 cu. yds.
HP 12 X 53 GALVANIZED STEEL PILES	
7 PILES REQUIRED - LIN. FEET	420
STEEL PILE POINTS	7 EA.

PROJECT NO. 42814

BRUNSWICK COUNTY

STATION: 14+76.30 -L-

REPLACES BRIDGE NO. 59 SHEET 3 OF 3

NORTH CAROLINA PROFESSIONAL SEAL 19661 ENGINEER L. KEVIN AUSTIN

5/11/10

PLANS PREPARED BY:

MULKEY
ENGINEERS & CONSULTANTS
PO Box 33127
Raleigh, NC 27636
(919) 851-1912
(919) 851-1918 (FAX)
WWW.MULKEYINC.COM

STATE OF NORTH CAROLINA
DEPARTMENT OF TRANSPORTATION
RALEIGH

SUBSTRUCTURE
END BENT 2

33' CLEAR ROADWAY - 90°SKEW

REVISIONS						SHEET NO.
NO.	BY:	DATE:	NO.	BY:	DATE:	26
1			3			TOTAL SHEETS
2			4			37

DRAWN BY : W. B. ALLEN DATE : 12/09
CHECKED BY : L. K. AUSTIN DATE : 2/10

5/10/2010 2:54:03 PM R:\Structures\B5217_SD_E2_03.dgn

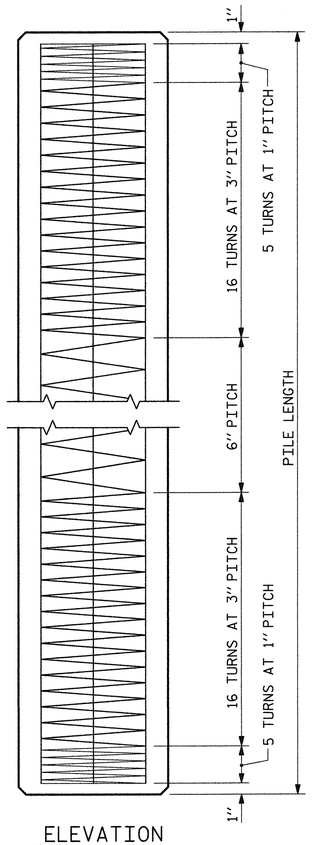

ELEVATION

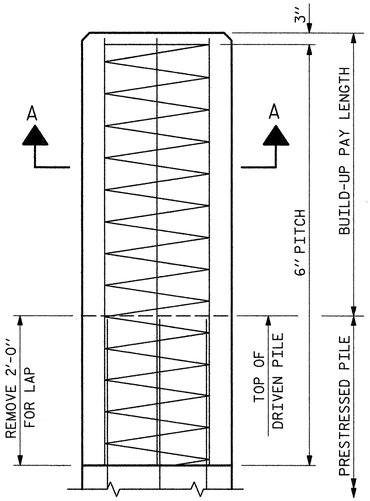

BUILD-UP
WITHOUT DRIVING

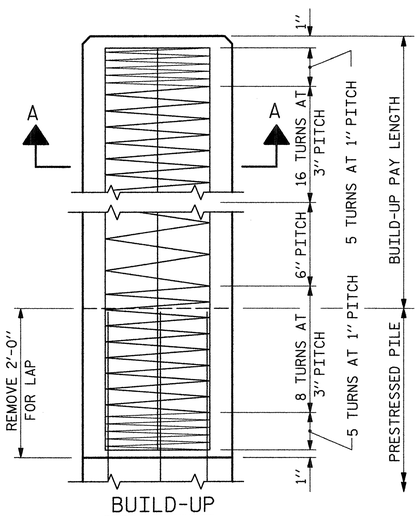

BUILD-UP
WITH DRIVING

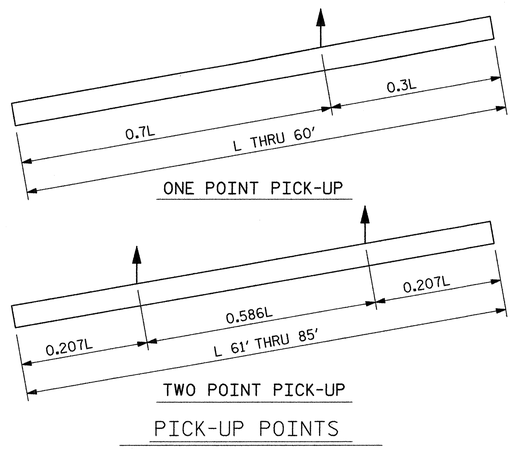

PICK-UP POINTS

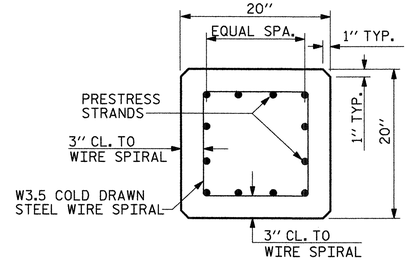

TYPICAL SECTION

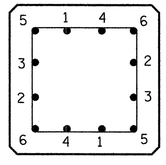

TYPICAL PATTERN
FOR
BURNING STRANDS

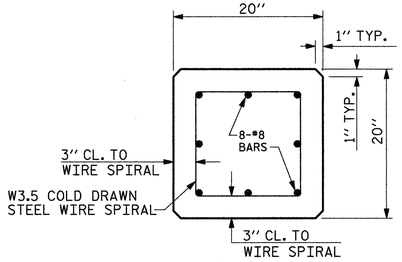

SECTION A-A

NOTES

CONCRETE DESIGN DATA : f'c= 5,000 PSI ;fc= 2,000 PSI

IMPACT IN HANDLING = 50%

IN DRIVING PILES, A METHOD APPROVED BY THE ENGINEER SHALL BE USED, WHEREBY THE HEAD OF THE PILE IS NOT DAMAGED.

PROPOSED DEVICES FOR LIFTING PILES, RECESS DETAILS, AND PATCHING MATERIAL SHALL BE DETAILED IN SHOP DRAWINGS. AFTER ATTACHMENTS HAVE BEEN REMOVED, OPENINGS SHALL BE REPAIRED SUCH THAT THE APPEARANCE OF THE PILE IS UNIFORM.

THE CONTRACTOR SHALL USE THE FOLLOWING STRAND TYPE:

SIZE	GRADE	NUMBER OF STRANDS	AREA	ULTIMATE STRENGTH	APPLIED PRESTRESS FORCE
½''	270 L.R.	12	0.153	41,300# PER STRAND	30,980# PER STRAND

STRANDS SHALL BE EQUALLY SPACED AS SHOWN IN THE "TYPICAL SECTION".

A CIRCULAR STRAND PATTERN SHALL NOT BE PERMITTED.

THE SLIP-FORM METHOD OF CASTING PILES WILL NOT BE PERMITTED.

IF STRAND STRESS IS RELIEVED BY BURNING, THE STRANDS SHALL BE BURNED IN OPPOSITE PAIRS AS INDICATED IN THE TYPICAL PATTERN SHOWN. FOR ANY NUMBER OF STRANDS BURN IN OPPOSITE PAIRS AND SYMMETRICAL ABOUT BOTH VERTICAL AND HORIZONTAL AXES, STRANDS 1-1 SHALL BE BURNED BEFORE 2-2, ETC. NOT MORE THAN 4 STRANDS, SAY 5-5 AND 6-6, MAY BE BURNED AT ANY ONE SECTION BEFORE THESE SAME PAIRS OF STRANDS ARE BURNED AT BOTH ENDS OF THE BED AND BETWEEN EACH PAIR OF PILES IN THE BED.

BUILD-UPS SHALL BE OF 'CLASS A' CONCRETE WITH 20% ADDITIONAL CEMENT. NO DRIVING OF THE BUILT-UP PILE WILL BE PERMITTED UNTIL THE CONCRETE HAS REACHED A COMPRESSIVE STRENGTH OF 3,000 P.S.I. AND UNTIL A PERIOD OF SEVEN DAYS HAS ELAPSED SINCE CASTING OF THE BUILD-UP.

ALL PRESTRESSING STRANDS SHALL BE 7-WIRE LOW-RELAXATION GRADE 270 STRANDS AND SHALL CONFORM TO AASHTO M203 EXCEPT FOR SAMPLING REQUIREMENTS WHICH SHALL BE IN ACCORDANCE WITH STANDARD SPECIFICATIONS.

THE TRANSFER OF LOAD FROM THE ANCHORAGES TO THE PILE SHALL BE DONE WHEN THE CONCRETE HAS REACHED A COMPRESSIVE STRENGTH OF NOT LESS THAN 3500 PSI.

THE WATER/CEMENT RATIO FOR CONCRETE PILES SHALL NOT EXCEED 0.40.

COMPOSITE PRESTRESSED CONCRETE PILES ARE REQUIRED AT ALL BENTS. SEE SECTION 450 OF THE STANDARD SPECIFICATIONS.

EACH 20" COMPOSITE PRESTRESSED CONCRETE PILE WILL HAVE A TOTAL LENGTH OF 55'-0" (45'-0" PRESTRESSED CONCRETE PILE PORTION AND 10'-0" STEEL HP 10 X 57 PORTION).

AT THE CONTRACTOR'S OPTION, THE COMPOSITE PILES MAY BE ASSEMBLED WHILE THE PRESTRESSED CONCRETE PILE PORTIONS AND THE STEEL HP PILE PORTIONS ARE LYING ON THE GROUND IN A HORIZONTAL POSITION. WHEN LIFTING THE ASSEMBLED COMPOSITE PILES INTO A VERTICAL POSITION, THEY SHALL BE LIFTED ONLY BY THE PRESTRESSED CONCRETE PILE PORTIONS USING TWO PICK-UP POINTS AND THE STEEL HP PILE PORTIONS SHALL NOT BE ALLOWED TO TOUCH THE GROUND. IF THIS OPTION IS CHOSEN, THE CONTRACTOR SHALL DETERMINE THE LOCATIONS OF THE TWO PICK-UP POINTS; THE TABLE SHOWN ON THIS SHEET DOES NOT APPLY.

QUANTITIES FOR ONE 20'' SQUARE PILE

	CONCRETE	PILE WT.	ONE PICK-UP POINTS		TWO PICK-UP POINTS	
LENGTH	CU. YDS.	TONS	0.3L	0.7L	0.207L	0.586L
25'-0''	2.56	5.18	7'-6''	17'-6''		
30'-0''	3.07	6.22	9'-0''	21'-0''		
35'-0''	3.58	7.26	10'-6''	24'-6''		
40'-0''	4.09	8.29	12'-0''	28'-0''		
45'-0''	4.61	9.33	13'-6''	31'-6''		
50'-0''	5.12	10.36	15'-0''	35'-0''		
55'-0''	5.63	11.40	16'-6''	38'-6''		
60'-0''	6.14	12.44	18'-0''	42'-0''		
65'-0''	6.65	13.47			13'-5½''	38'-1''
70'-0''	7.17	14.51			14'-6''	41'-0''
75'-0''	7.68	15.55			15'-6½''	43'-11''
80'-0''	8.19	16.58			16'-6½''	46'-11''
85'-0''	8.70	17.62			17'-7''	49'-10''

STEEL PILE CONNECTION DETAILS

NOTES

THE HP 10 X 57 STEEL PILE AND ALL PILE CONNECTION ELEMENTS SHALL BE GALVANIZED. SEE SPECIAL PROVISIONS.

PLATE SHALL MEET THE REQUIREMENTS OF AASHTO M270 GRADE 36.

THE 1" DIAMETER THREADED BARS SHALL BE EITHER DYWIDAG BARS OR WILLIAMS ALL-THREAD BARS (Fu = 150 KSI).

THE NUTS FOR THE THREADED BARS RETAINING THE PLATE SHALL BE TIGHTENED FINGER TIGHT AND GIVEN ONE ADDITIONAL TURN. THREADS OF THE NUTS AND THREADED BARS SHALL THEN BE BURRED AT THE FACE OF THE NUTS WITH A SHARP POINTED TOOL.

PILE SHALL BE CAST WITH THREADED BARS AND PLATE IN PLACE.

FOR SPIRAL REINFORCING AND PRESTRESSING STRAND DETAILS, SEE DETAILS ON THIS SHEET.

* EXCEPT AS NOTED BELOW, THE HP 10 X 57 SECTION SHALL BE WELDED TO THE STEEL PLATE AFTER STRAND STRESS IS RELIEVED. THE HP 10 X 57 SECTION MAY BE WELDED IN THE PRESTRESSER'S YARD OR IN THE FIELD. WHEN A CIRCULAR STRAND PATTERN AS SHOWN ON THE PLANS IS USED, THE CONTRACTOR, AT HIS OPTION, MAY WELD THE HP 10 X 57 SECTION TO THE STEEL PLATE AT THE FABRICATION PLANT PRIOR TO PLACING THE CONCRETE. THE FLANGES OF THE HP SECTION SHALL BE PARALLEL TO THE EDGES OF THE STEEL PLATE AND CONCRETE PILE.

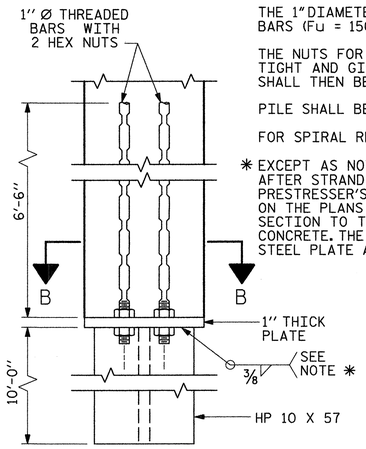

ELEVATION

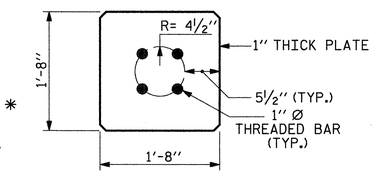

SECTION B-B
(HOLES FOR STRANDS NOT SHOWN)

PROJECT NO. 42814

BRUNSWICK COUNTY

STATION: 14+76.30 -L-

REPLACES BRIDGE NO. 59 SHEET 1 OF 1

PLANS PREPARED BY:

MULKEY
ENGINEERS & CONSULTANTS
PO BOX 33127
RALEIGH, N.C. 27636
(919) 851-1912
(919) 851-1918 (FAX)
WWW.MULKEYINC.COM

THIS STANDARD DRAWING REVIEWED & ADOPTED FOR USE AT THE REFERENCED LOCATION BY THE UNDERSIGNED:

NORTH CAROLINA PROFESSIONAL SEAL 19661 ENGINEER L. KEVIN AUSTIN
5/11/10

STATE OF NORTH CAROLINA
DEPARTMENT OF TRANSPORTATION
RALEIGH

STANDARD
20'' COMPOSITE PRESTRESSED CONCRETE PILE
STD. NO. PCP3

REVISIONS						SHEET NO.
NO.	BY:	DATE:	NO.	BY:	DATE:	27
1			3			TOTAL SHEETS
2			4			37

ASSEMBLED BY :	W. B. ALLEN	DATE :	12/09
CHECKED BY :	L. K. AUSTIN	DATE :	2/10
DRAWN BY : WJH 1/89	REV. 6/1/94		EEM/GRP
CHECKED BY : CRK 3/89	REV. 8/16/99R		RAL/LES
	REV. 5/1/06		TLA/GM

5/10/2010 2:55:32 PM R:\Structures\B5217_SD_PP_0.dgn

CONTRACT: DO00041 PROJECT: B-5217

STATE	STATE PROJECT REFERENCE NO.	SHEET NO.	TOTAL SHEETS
N.C.	B-5217	28	37

STATE PROJ. NO.	F.A. PROJ. NO.	DESCRIPTION
42814	NA	P.E.

STATE OF NORTH CAROLINA
DIVISION OF HIGHWAYS

PLAN FOR PROPOSED
HIGHWAY EROSION CONTROL

HIGH QUALITY WATER(S) EXIST ON THIS PROJECT

High Quality Water Zone(s) Exist

Refer To E. C. Special Provisions for Special Considerations.

ENVIRONMENTALLY SENSITIVE AREA(S) EXIST ON THIS PROJECT

Refer To E. C. Special Provisions for Special Considerations.

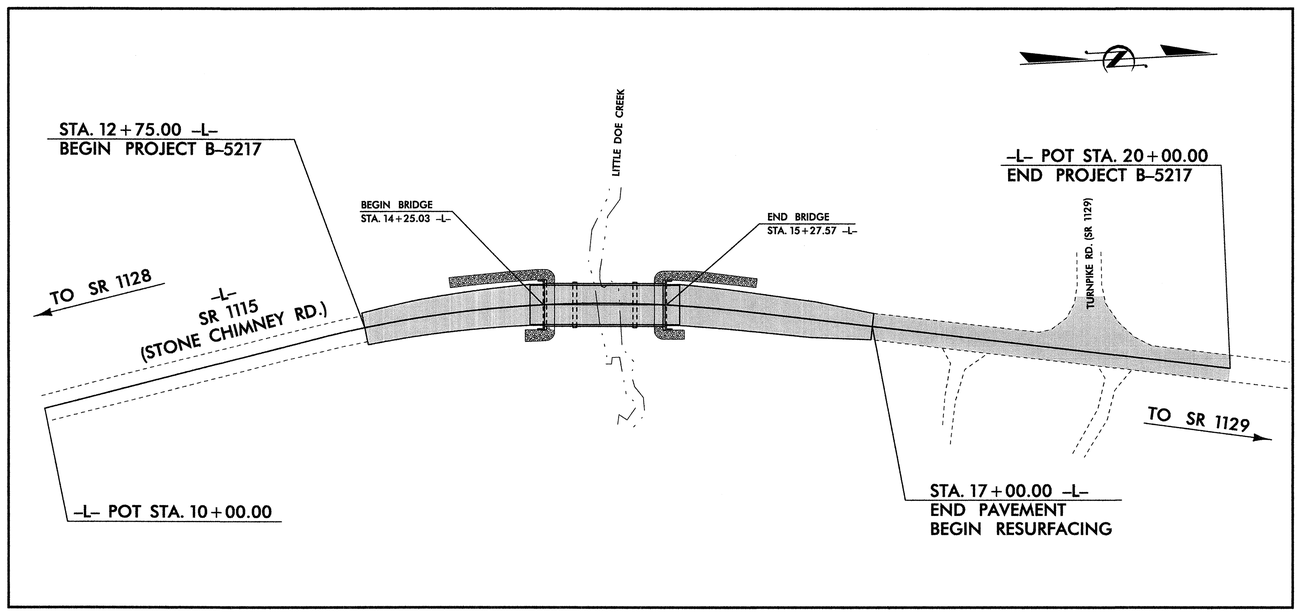

(NOT TO SCALE)

EROSION AND SEDIMENT CONTROL MEASURES

Std. #	Description	Symbol
1630.03	Temporary Silt Ditch	TSD
1630.05	Temporary Diversion	TD
1605.01	Temporary Silt Fence	
1606.01	Special Sediment Control Fence	
1622.01	Temporary Berms and Slope Drains	
	Silt Basin Type B	
1633.01	Temporary Rock Silt Check Type-A	
	Temporary Rock Silt Check Type-A with Matting and Polyacrylamide (PAM)	
	Temporary Rock Silt Check Type-B	
	Wattle/Coir Fiber Wattle	
	Wattle/Coir Fiber Wattle with Polyacrylamide (PAM)	
1634.01	Temporary Rock Sediment Dam Type-A	
1634.02	Temporary Rock Sediment Dam Type-B	
1635.01	Rock Pipe Inlet Sediment Trap Type-A	
1635.02	Rock Pipe Inlet Sediment Trap Type-B	
1630.04	Stilling Basin	
1630.06	Special Stilling Basin	
	Rock Inlet Sediment Trap:	
1632.01	Type A	A
1632.02	Type B	B
1632.03	Type C	C
	Skimmer Basin	
	Tiered Skimmer Basin	
	Infiltration Basin	

THIS PROJECT CONTAINS EROSION CONTROL PLANS FOR CLEARING AND GRUBBING PHASE OF CONSTRUCTION.

MULKEY
ENGINEERS & CONSULTANTS
PO Box 33127
Raleigh, N.C. 27636
(919) 851-1912
(919) 851-1918 (FAX)
WWW.MULKEYINC.COM

THIS PROJECT IS NOT WITHIN ANY MUNICIPAL BOUNDARIES

GRAPHIC SCALE

0
PLANS

0
PROFILE (HORIZONTAL)

0
PROFILE (VERTICAL)

ROADSIDE ENVIRONMENTAL UNIT
DIVISION OF HIGHWAYS
STATE OF NORTH CAROLINA

PROJECT LENGTH

LENGTH ROADWAY PROJECT B-5217 = 0.118 MILE

LENGTH STRUCTURE PROJECT B-5217 = 0.019 MILE

TOTAL LENGTH PROJECT B-5217 = 0.137 MILE

Prepared In the Office of:
Mulkey Engineers & Consultants
FOR THE NORTH CAROLINA DEPARTMENT OF TRANSPORTATION
2006 STANDARD SPECIFICATIONS

MATTHEW HARVEY
MULKEY E & C ENGINEER

LEVEL III-A CERTIFICATION No.: 412

Roadway Standard Drawings

The following roadway english standards as appear in "Roadway Standard Drawings"- Roadway Design Unit - N. C. Department of Transportation - Raleigh, N. C., dated July 18, 2006 and the latest revison thereto are applicable to this project and by reference hereby are considered a part of these plans.

1604.01	Railroad Erosion Control Detail	1630.06	Special Stilling Basin
1605.01	Temporary Silt Fence	1632.01	Rock Inlet Sediment Trap Type A
1606.01	Special Sediment Control Fence	1632.02	Rock Inlet Sediment Trap Type B
1607.01	Gravel Construction Entrance	1632.03	Rock Inlet Sediment Trap Type C
1622.01	Temporary Berms and Slope Drains	1633.01	Temporary Rock Silt Check Type A
1630.01	Riser Basin	1634.01	Temporary Rock Sediment Dam Type A
1630.03	Temporary Silt Ditch	1634.02	Temporary Rock Sediment Dam Type B
1630.04	Stilling Basin	1635.01	Rock Pipe Inlet Sediment Trap Type A
1630.05	Temporary Diversion	1635.02	Rock Pipe Inlet Sediment Trap Type B

5/12/2010
R:\Structures\B5217_SD_EC_TSH_01.dgn
6:26:57 AM

EROSION CONTROL PLANS

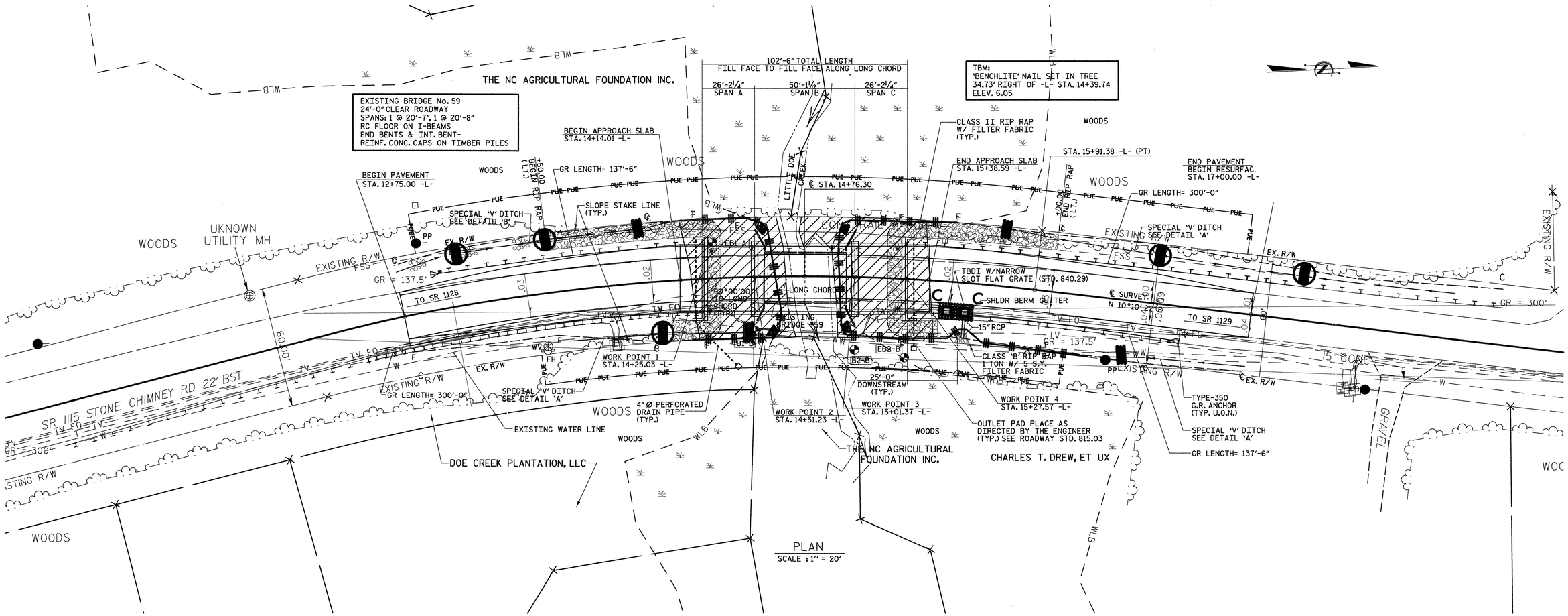

ROADSIDE ENVIRONMENTAL UNIT
DEPARTMENT OF TRANSPORTATION
DIVISION OF HIGHWAYS
RALEIGH, N.C.

2006 STANDARD SPECIFICATIONS

NOTES: ANY DEVIATION FROM OPTIONS GIVEN WILL REQUIRE PRIOR APPROVAL BY ENGINEER.

ADDITIONAL EROSION CONTROL DEVICES MAY NEED TO BE INSTALLED AS DIRECTED BY THE ENGINEER.

ENVIRONMENTALLY SENSITIVE AREA
SEE PROJECT SPECIAL PROVISIONS

Std. #	Description	Symbol
1605.01	Temporary Silt Fence	
1606.01	Special Sediment Control Fence Section	
1607.01	Gravel Construction Entrance (GCE)	
1622.01	Temporary Berms and Slope Drains	
1632.03	Rock Inlet Sediment Trap Type-C	
1633.01	Temporary Rock Silt Check Type-A	
	Temporary Rock Silt Check Type-A with Matting and Polyacrylamide (PAM)	

PROJECT NO. 42814

BRUNSWICK COUNTY

STATION: 14+76.30 -L-

REPLACES BRIDGE NO. 59

STATE OF NORTH CAROLINA
DEPARTMENT OF TRANSPORTATION
RALEIGH

BRIDGE ON SR 1115
OVER LITTLE DOE CREEK
BETWEEN SR 1128 & SR 1129

33' CLEAR ROADWAY - 90° SKEW

PLANS PREPARED BY:

MULKEY
ENGINEERS & CONSULTANTS
PO Box 33187
RALEIGH, N.C. 27636
(919) 851-1912
(919) 851-1916 (FAX)
WWW.MULKEYINC.COM

REVISIONS						SHEET NO.
NO.	BY:	DATE:	NO.	BY:	DATE:	29
1			3			TOTAL SHEETS
2			4			37

5/10/2010 3:09:22 PM R:\Structures\B5217_SD_EC_0.dgn

TEMPORARY ROCK SILT CHECK TYPE 'A' WITH EXCELSIOR MATTING AND POLYACRYLAMIDE (PAM)

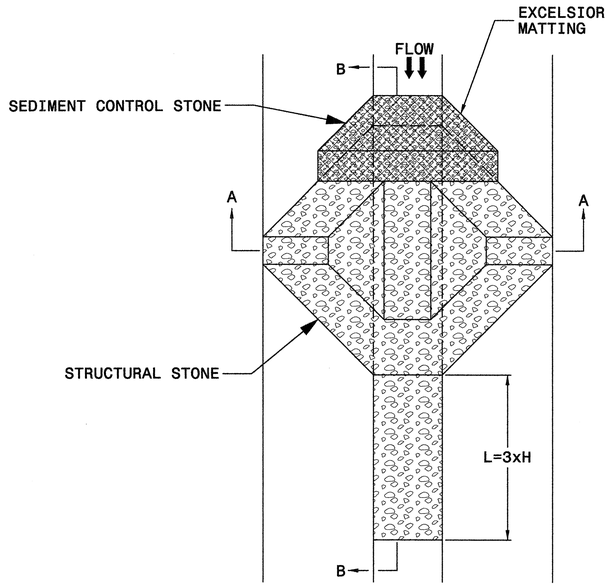

PLAN

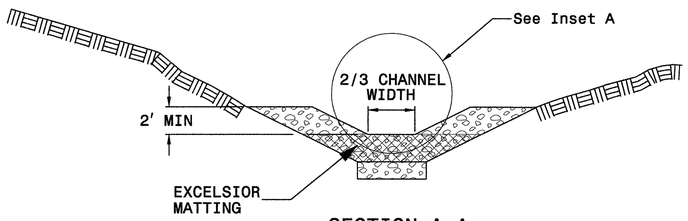

SECTION A-A

NOTES

USE EXCELSIOR FOR MATTING MATERIAL AND ANCHOR MATTING SECTION AT TOP AND BOTTOM WITH CLASS B STONE.

PRIOR TO POLYACRYLAMIDE (PAM) APPLICATION, OBTAIN A SOIL SAMPLE FROM PROJECT LOCATION, AND FROM OFFSITE MATERIAL, AND ANALYZE FOR APPROPRIATE PAM FLOCCULANT TO BE APPLIED TO EACH ROCK SILT CHECK.

INITIALLY APPLY 3.5 OUNCES OF POLYACRYLAMIDE (PAM) TO TOP OF MATTING SECTION AND AFTER EVERY RAINFALL EVENT THAT EQUALS OR EXCEEDS 0.50 INCHES.

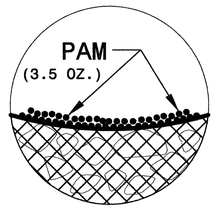

INSET A

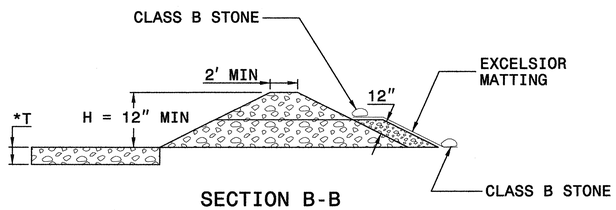

SECTION B-B

*T = 12" MIN., 18" MAX.

NOT TO SCALE

PROJECT NO. 42814

BRUNSWICK COUNTY

STATION: 14+76.30 -L-

REPLACES BRIDGE NO. 59

STATE OF NORTH CAROLINA
DEPARTMENT OF TRANSPORTATION
RALEIGH

BRIDGE ON SR 1115
OVER LITTLE DOE CREEK
BETWEEN SR 1128 & SR 1129

33' CLEAR ROADWAY - 90°SKEW

PLANS PREPARED BY:
MULKEY
ENGINEERS & CONSULTANTS
PO BOX 33127
RALEIGH, N.C. 27636
(919) 851-1912
(919) 851-1918 (FAX)
WWW.MULKEYINC.COM

REVISIONS						SHEET NO.
NO.	BY:	DATE:	NO.	BY:	DATE:	30
1			3			TOTAL SHEETS
2			4			37

5/10/2010 3:40:25 PM R:\Structures\B5217_SD_EC_01.dgn

MATTING INSTALLATION DETAIL

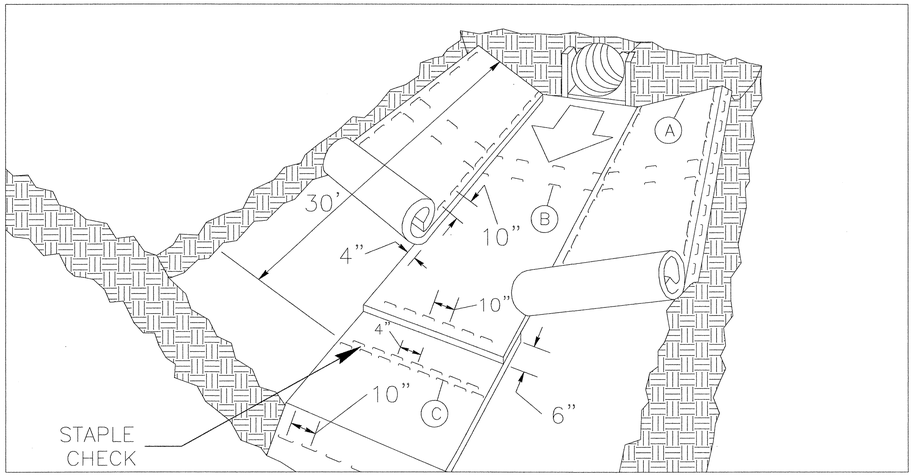

MATTING IN DITCHES

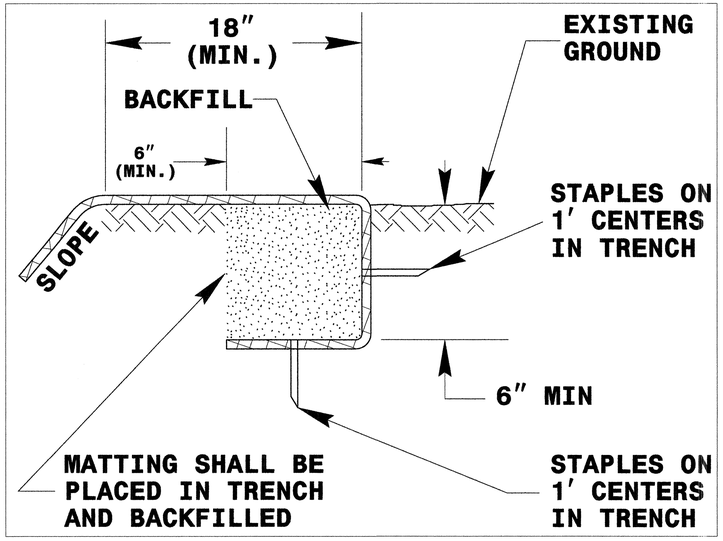

DIAGRAM (A)

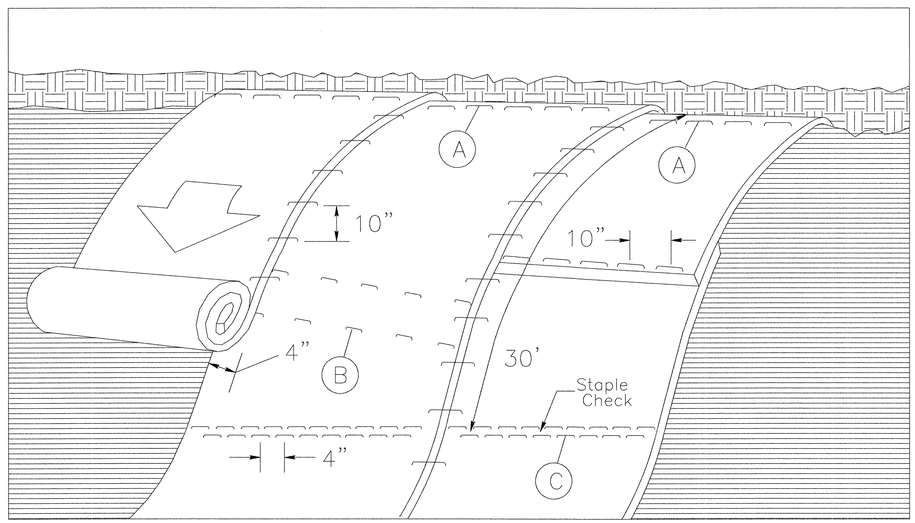

MATTING ON SLOPES

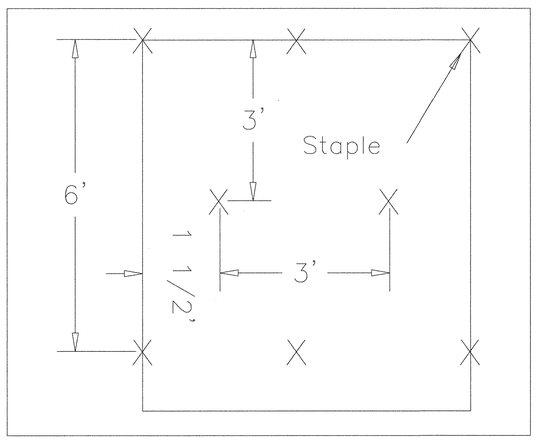

DIAGRAM (B)

Staple Check Pattern

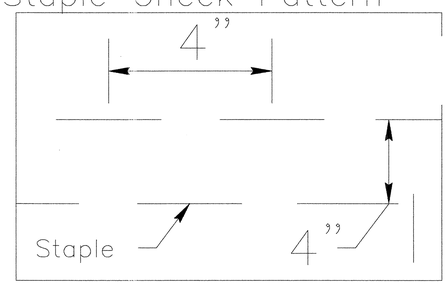

DIAGRAM (C)

NOT TO SCALE

NOTES:

THIS DETAIL APPLIES TO STRAW, EXCELSIOR, AND PERMANENT SOIL REINFORCEMENT MAT (PSRM) INSTALLATION.

STAPLES SHALL BE NO. 11 GAUGE STEEL WIRE FORMED INTO A "U" SHAPE WITH A MINIMUM THROAT WIDTH OF 1 INCH AND NOT LESS THAN 6 INCHES IN LENGTH.

PLANS PREPARED BY:
MULKEY
ENGINEERS & CONSULTANTS
PO Box 33127
RALEIGH, N.C. 27636
(919) 851-1472
(919) 851-1918 (FAX)
WWW.MULKEYINC.COM

PROJECT NO. 42814

BRUNSWICK COUNTY

STATION: 14+76.30 -L-

REPLACES BRIDGE NO. 59

STATE OF NORTH CAROLINA
DEPARTMENT OF TRANSPORTATION
RALEIGH

BRIDGE ON SR 1115
OVER LITTLE DOE CREEK
BETWEEN SR 1128 & SR 1129

33' CLEAR ROADWAY - 90°SKEW

REVISIONS						SHEET NO.
NO.	BY:	DATE:	NO.	BY:	DATE:	31
1			3			TOTAL SHEETS
2			4			37

DIVISION OF HIGHWAYS
STATE OF NORTH CAROLINA

SOIL STABILIZATION SUMMARY SHEET

MATTING FOR EROSION CONTROL

CONST SHEET NO.	LINE	FROM STATION	TO STATION	SIDE	ESTIMATE (SY)
28	-L-	15+75	18+00	LT	115
28	-L-	16+25	17+00	RT	40
			TOTAL		155

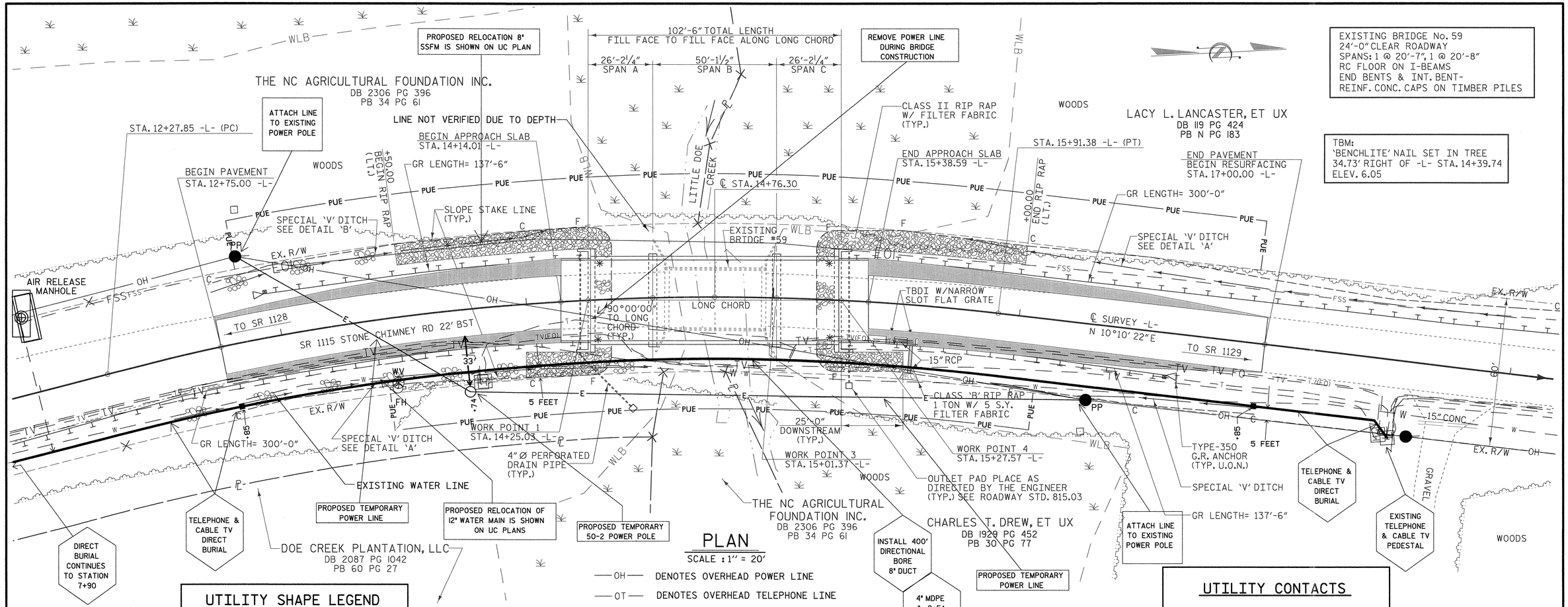

PLAN

SCALE : 1" = 20'

—OH— DENOTES OVERHEAD POWER LINE
—OT— DENOTES OVERHEAD TELEPHONE LINE
— T — DENOTES TELEPHONE LINE
—TV— DENOTES TELEVISION LINE
—TV(FO)— DENOTES TELEVISION LINE (FIBER OPTIC)
— W — DENOTES WATER LINE
— FSS — DENOTES FORCE MAIN SAN. SEWER

NOTE: GUARDRAIL LENGTHS AS SHOWN INCLUDE ANCHOR UNITS.

U.O.N. - UNLESS OTHERWISE NOTED

UTILITY SHAPE LEGEND

ELECTRIC (BEMC) MODIFICATIONS

TELEPHONE & CABLE TV (ATMC) MODIFICATIONS

UTILITY CONTACTS

ATLANTIC TELEPHONE MEMBERSHIP CORP.
DANE STANLEY
910-755-1706

BRUNSWICK ELECTRIC CORP.
JOSHUA WINSLOW
910-754-4391

BRUNSWICK COUNTY PUBLIC UTILITIES
(WATER-SEWER)
JOHN NICHOLS
910-253-2653

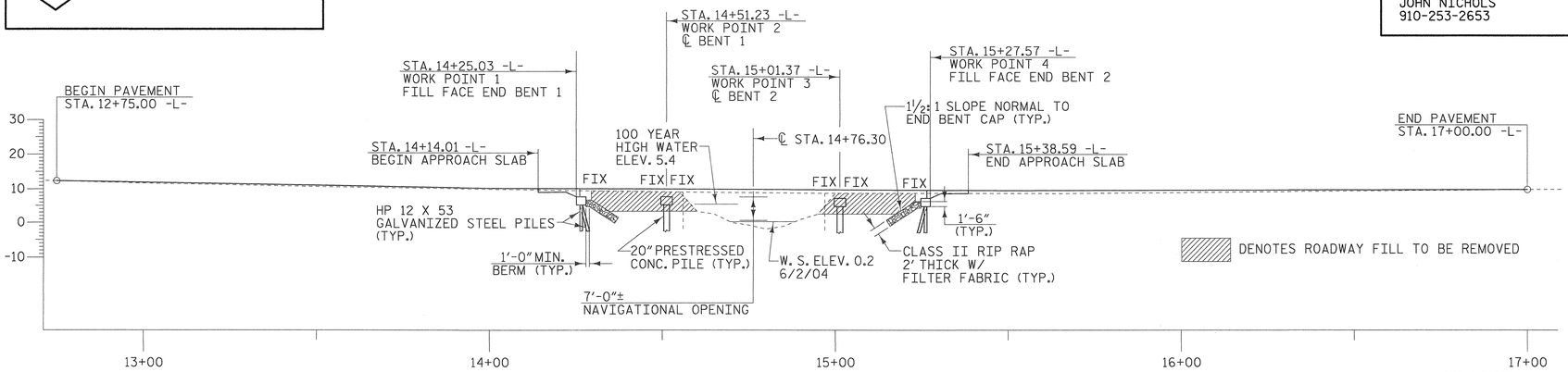

PROFILE ALONG ℄ SURVEY

SCALE : 1" = 20'

PROJECT NO. 42814
BRUNSWICK COUNTY
STATION: 14+76.30 -L-

REPLACES BRIDGE NO. 59

STATE OF NORTH CAROLINA
DEPARTMENT OF TRANSPORTATION
RALEIGH

UTILITY BY OTHERS
BRIDGE ON SR 1115
OVER LITTLE DOE CREEK
BETWEEN SR 1128 & SR 1129
33' CLEAR ROADWAY - 90°SKEW

PLANS PREPARED BY:

MULKEY
ENGINEERS & CONSULTANTS
PO Box 33127
RALEIGH, N.C. 27636
(919) 851-1912
(919) 851-1918 (FAX)
WWW.MULKEYINC.COM

REVISIONS						SHEET NO.
NO.	BY:	DATE:	NO.	BY:	DATE:	33
1			3			TOTAL SHEETS
2			4			37

DRAWN BY : W. B. ALLEN DATE : 12/09
CHECKED BY : L. K. AUSTIN DATE : 1/10

5/12/2010 6:53:43 AM R:\Structures\B5217_SD_UC_01.dgn

PROJECT: B-5217

CONTRACT: 42814

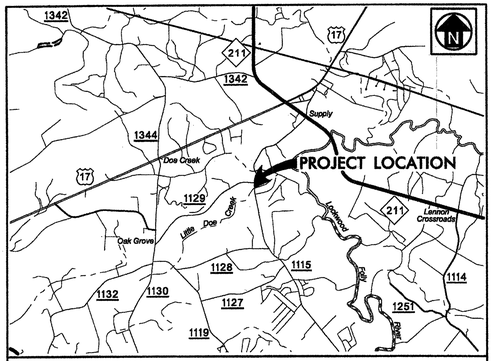

VICINITY MAP
(NOT TO SCALE)

STATE OF NORTH CAROLINA
DIVISION OF HIGHWAYS

BRUNSWICK COUNTY

LOCATION: BRIDGE NO. 59 OVER LITTLE DOE CREEK

TYPE OF WORK: WATER AND SEWER RELOCATION

STATE	STATE PROJECT REFERENCE NO.	SHEET NO.
N.C.	B-5217	UC-1
STATE PROJECT NO.	F.A. PROJ. NO.	DESCRIPTION
42814	NA	P.E.

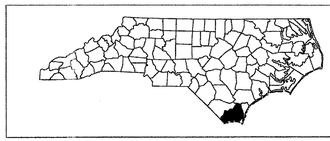

UC-2

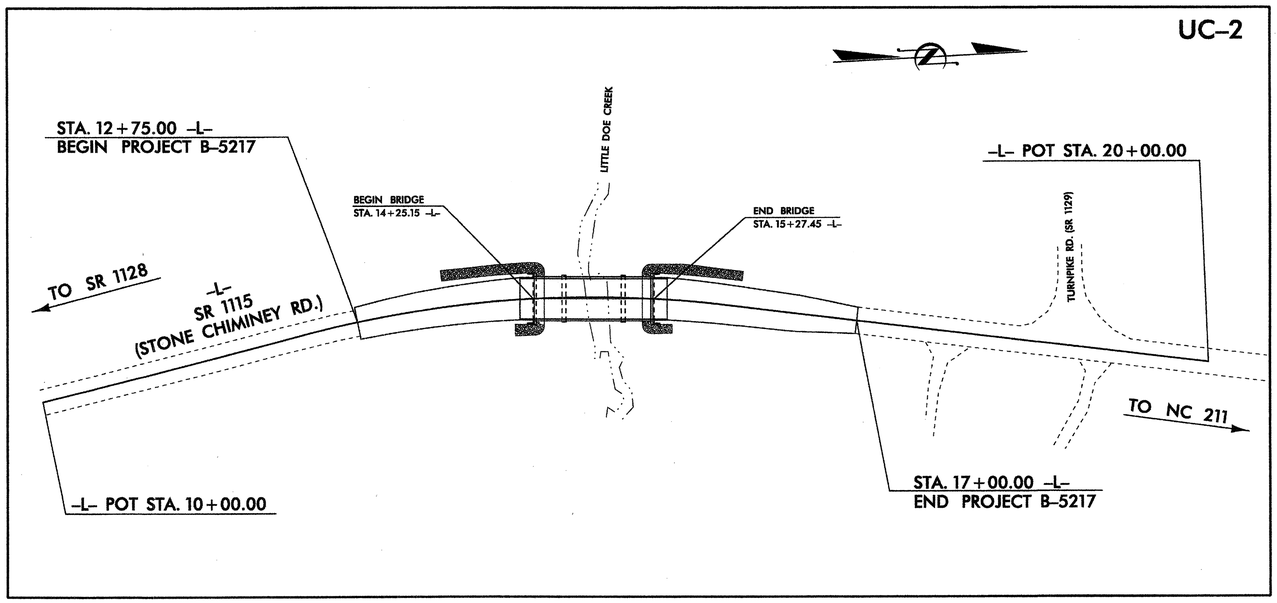

THIS PROJECT IS NOT WITHIN ANY MUNICIPAL BOUNDARIES

INDEX OF SHEETS

SHEET NO.	DESCRIPTION
UC-1	TITLE SHEET
UC-2	UTILITY CONSTRUCTION PLAN SHEET(S)
UC-3	PROFILE SHEET(S)
UC-4	DETAIL SHEET(S)

WATER AND SEWER OWNERS ON PROJECT

(1) BRUNSWICK COUNTY (WATER AND SEWER)

Prepared In the Office of:

AECOM

AECOM TECHNICAL SERVICES OF NORTH CAROLINA, INC.
701 CORPORATE CENTER DRIVE, SUITE 475, RALEIGH, NC 27607
919-854-6200 919-854-6259 (fax)

NORTH CAROLINA PROFESSIONAL SEAL 023965 ENGINEER LARRY W. MITCHELL

2-09-10

FOR:
DIVISION OF HIGHWAYS
PROJECT SERVICES
UTILITY ENGINEERING
1591 MAIL SERVICES CENTER
RALEIGH NC 27699-1591
PHONE (919) 250-4128
FAX (919) 250-4119

Roger Worthington, P.E. — *UTILITIES SECTION ENGINEER*
_____ — *UTILITIES SQUAD LEADER PROJECT ENGINEER*
AECOM Technical Services — *UTILITIES PROJECT DESIGNER*

2/9/2010 3:18:34 PM
G:\LNM_Projects\NCDOT UTILITY\brunswick8527\UC_01.dgn

AECOM
AECOM TECHNICAL SERVICES OF NORTH CAROLINA, INC.

PROJECT REFERENCE NO.	SHEET NO.
B-5217	UC-12

SCALE: 10 0 20

NORTH CAROLINA PROFESSIONAL SEAL 023965 ENGINEER LARRY W. MITCHELL
2-26-10

UTILITY CONSTRUCTION

02-24-10 Rev. 1 - Modified Force Main Trenchless Installation Limits per CAMA Recommendations

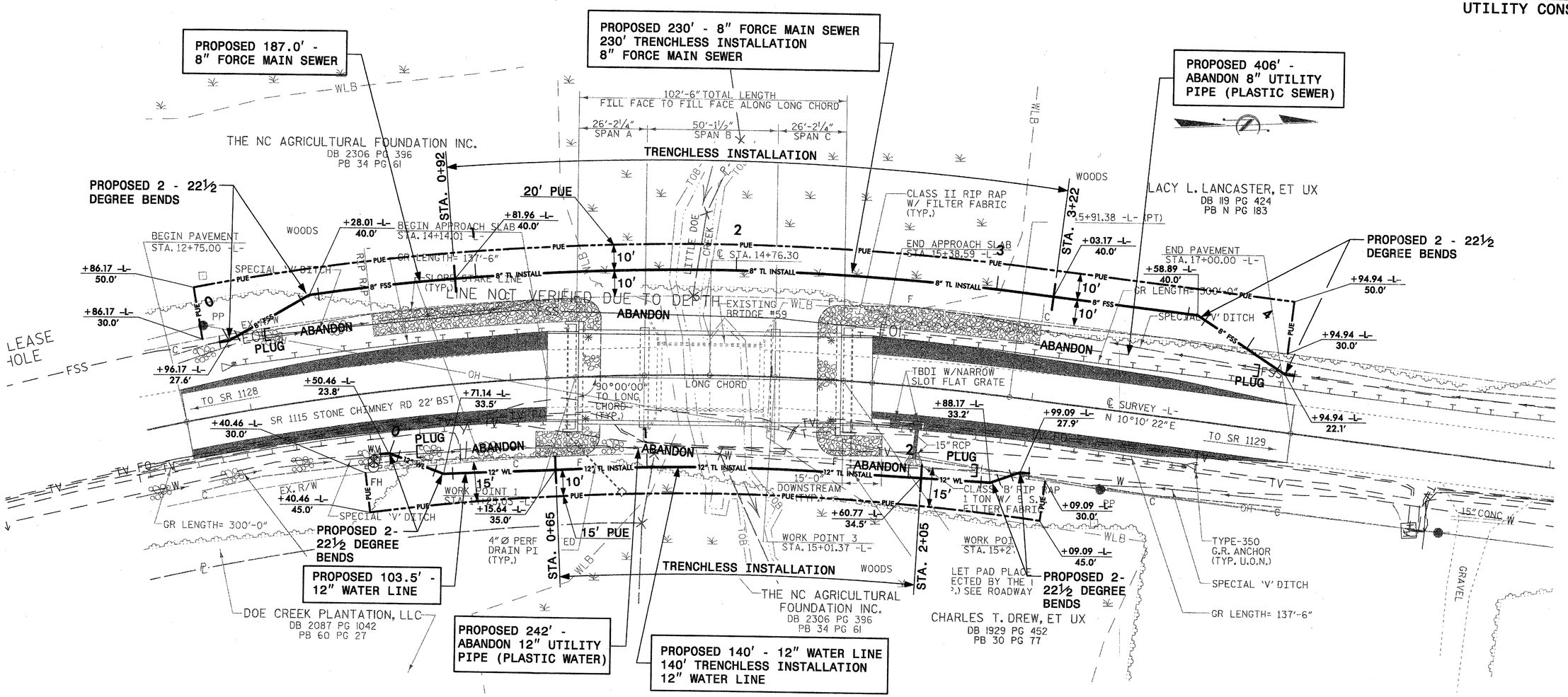

USER: swilsong
DATE: 2/26/2010
TIME: 9:40:28 AM
DGN: d:\dot\r\b5217\b5217trunkwb8527\UC-12.dgn

PROJECT REFERENCE NO.	SHEET NO.
B-5217	UC-3

SCALE: 10 0 20

AECOM
AECOM TECHNICAL SERVICES OF NORTH CAROLINA, INC.

NORTH CAROLINA PROFESSIONAL SEAL 023965 ENGINEER LARRY W. MITCHELL
2-24-10

UTILITY CONSTRUCTION

02-24-10 Rev. 1 - Modified Force Main Trenchless Installation Limits per CAMA Recommendations

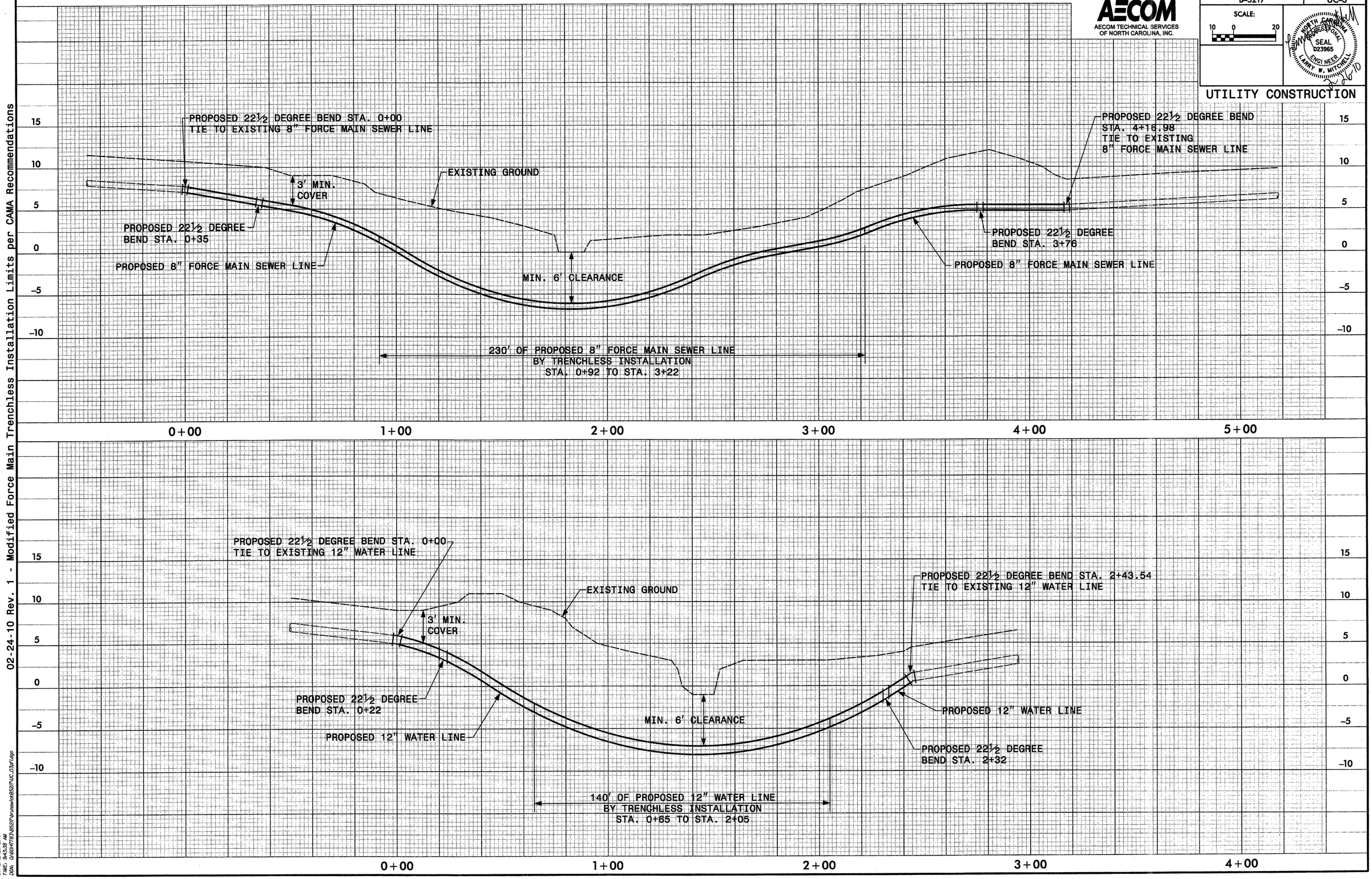

USER: pnh909
DATE: 2/25/2010
TIME: 9:43:38 AM
DGN: 0A60/47783/B5217/Drawn/dot852/TUC.03of1dgn

UTILITY CONSTRUCTION

MAXIMUM TRENCH WIDTH AT TOP OF PIPE			
NOMINAL PIPE SIZE (inches)	TRENCH WIDTH (inches)	NOMINAL PIPE SIZE (inches)	TRENCH WIDTH (inches)
4	28	20	44
6	30	24	48
8	32	30	54
10	34	36	60
12	36	42	66
14	38	48	72
16	40	54	78
18	42		

TYPE "3"
(BEDDING FOR D.I. PIPE)

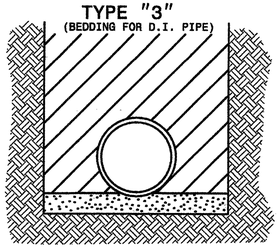

PIPE BEDDED IN 4" MINIMUM LOOSE SOIL. TRENCH BACKFILLED IN LOOSE 6" LAYERS COMPACTED TO TOP OF TRENCH USING LOCAL EXCAVATED MATERIAL IF APPROVED BY THE ENGINEER, OR SELECT MATERIAL ALL MATERIAL SHALL BE FREE OF ROCKS, FOREIGN MATERIAL, AND FROZEN EARTH. COMPACTION SHALL BE TO APPROX. 95% DENSITY IN ACCORDANCE WITH AASHTO T-99 AS MODIFIED BY THE DEPARTMENT OF TRANSPORTATION.

CLASS "C"
(BEDDING FOR P.V.C. PIPE)

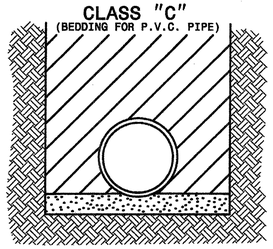

PIPE BEDDED IN LOOSE MATERIAL, LIGHTLY TAMPED WITH A MINIMUM OF 6" UNDER PIPE. TRENCH BACKFILLED IN LOOSE 6" LAYERS COMPACTED TO TOP OF TRENCH USING LOCAL EXCAVATED MATERIAL, IF APPROVED BY THE ENGINEER, OR SELECT MATERIAL. ALL MATERIAL SHALL BE FREE OF ROCKS, FOREIGN MATERIAL, AND FROZEN EARTH. COMPACTION SHALL BE TO APPROX. 95% DENSITY IN ACCORDANCE WITH AASHTO T-99 AS MODIFIED BY THE DEPARTMENT OF TRANSPORTATION.

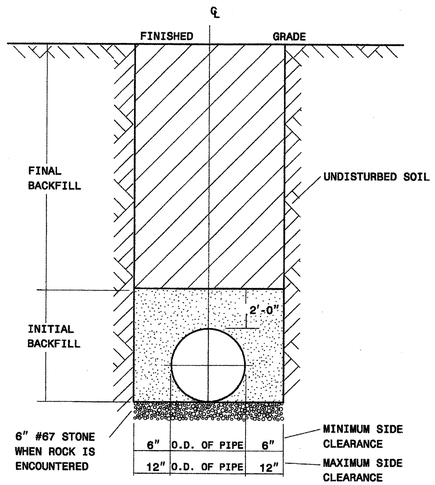

TRENCH & BACKFILL DETAIL
NTS

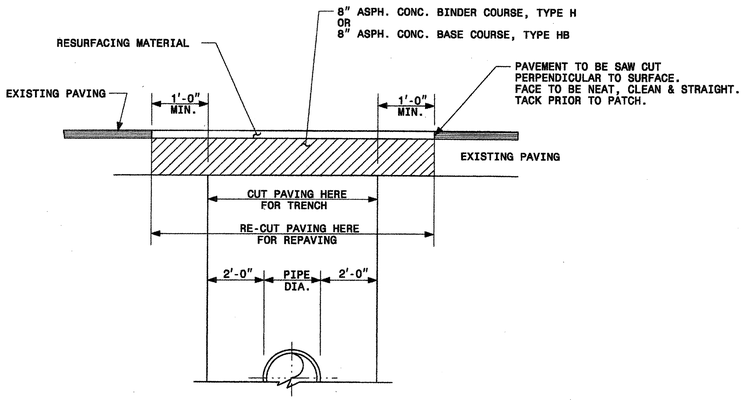

NOTE:
IF ENGINEER APPROVED, THEN THE BACKFILL (AGGREGATE BASE COURSE OR SUITABLE SUBGRADE) SHALL BE MADE IN 6" LAYERS AND SHALL BE COMPACTED TO AT LEAST 95% OF STANDARD DENSITY (AASHTO METHOD T-99). EACH LAYER MUST BE THOROUGHLY TAMPED BY A MECHANICAL TAMP BEFORE THE NEXT LAYER IS PLACED. ALL ASPHALT PAVEMENT REPLACED SHALL BE IN ACCORDANCE WITH THE MOST CURRENT N.C.D.O.T. STANDARD SPECIFICATIONS. BASE COURSE DENSITY SHALL BE 100%.

SAW CUT AND PATCH METHOD
UTILITY UNDER EXISTING ASPHALT STREETS
NTS

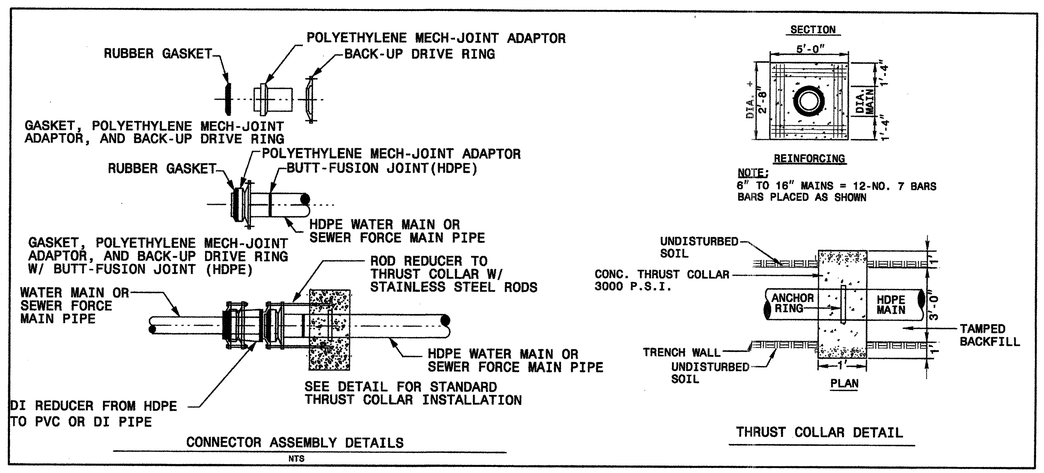

CONNECTOR ASSEMBLY DETAILS
NTS

THRUST COLLAR DETAIL

USER: awtaong
DATE: 2/24/2010
TIME: 3:30:30 PM
DGN: 0:\WW_Projects\NCDOT UTILITY\Arrows\Std8520\UC_04.dgn