STATE	STATE PROJECT REFERENCE NO.	SHEET NO.	TOTAL SHEETS
N.C.	B-4250		

STATE PROJECT NO.	F.A. PROJ. NO.	DESCRIPTION
33592.1.1		P.E.
33592.2.1		UTIL & R/W
33592.3.1		CONST.

STATE OF NORTH CAROLINA
DIVISION OF HIGHWAYS

ROBESON COUNTY

LOCATION: SR 1750 BRG. # 35 OVER BIG MARSH SWAMP

TYPE OF WORK: BRIDGE REPLACEMENT WITH BOX BEAM SUPERSTRUCTURE ON STEEL PILE END BENTS

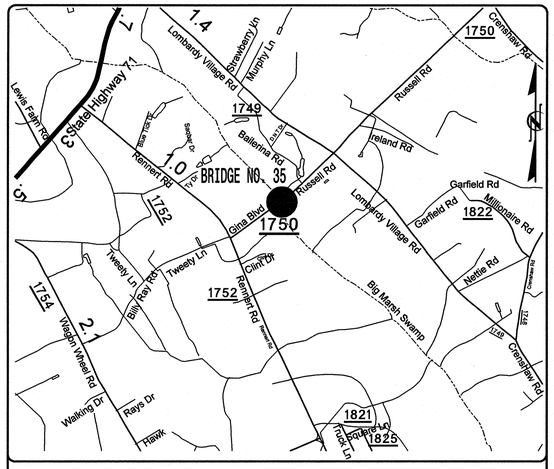

VICINITY MAP
(NOT TO SCALE)

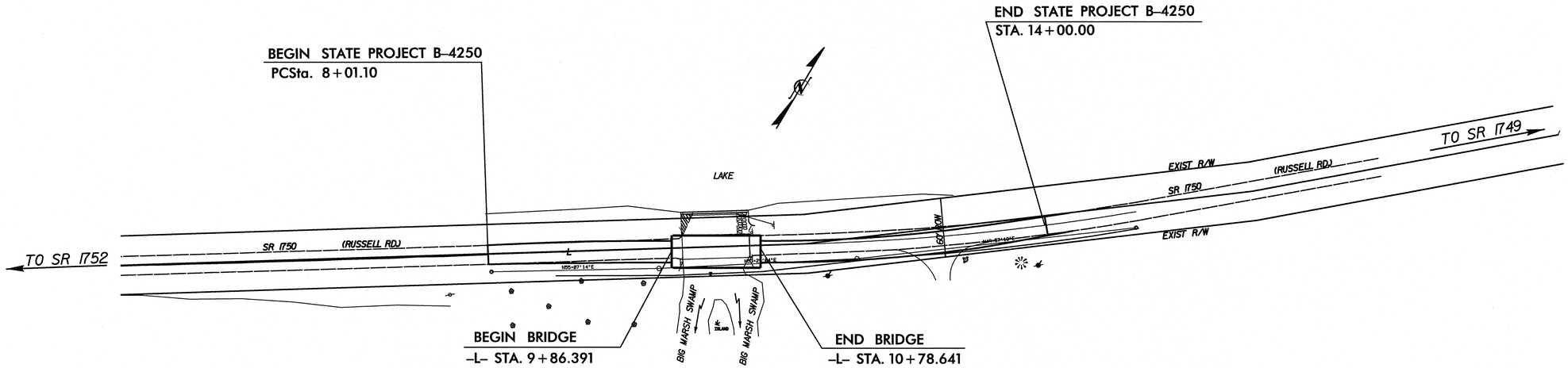

LOCATION SKETCH

CONTRACT: DO00139

TIP NO: B-4250

3/28/2012 7:33:22 AM
P:\03012\B-4250\BoxBeam\boxbeam Dgn\B4250_STR_1sh.dgn

STATE OF NORTH CAROLINA DEPARTMENT OF TRANSPORTATION

DESIGN DATA

ADT 2011 = 1625
ADT 2030 = 3000

DUALS 5% TTST 3%

PROJECT LENGTH

LENGTH ROADWAY TIP PROJECT B-4250	=	.092 MILE
LENGTH STRUCTURE TIP PROJECT B-4250	=	.022 MILE
TOTAL LENGTH TIP PROJECT B-4250	=	.114 MILE

Prepared for the North Carolina Department of Transportation in the Office of:
WETHERILL ENGINEERING
559 JONES FRANKLIN ROAD
SUITE 164
Raleigh, N.C. 27606
Bus: 919 851 8077
Fax: 919 851 8107

2006 STANDARD SPECIFICATIONS

LETTING DATE:
NOVEMBER 30, 2011

JOHN DILWORTH, PE
PROJECT DESIGN ENGINEER

NCDOT CONTACT: ZAKI WAFA, PE
STRUCTURES MANAGEMENT

NORTH CAROLINA PROFESSIONAL SEAL 22072 ENGINEER JOHN ARTHUR DILWORTH

3-28-12

PROJECT DESIGN ENGINEER

TIP NO: B-4250

WBS NO. 33592.1.1

EXISTING BRIDGE No. 35
4 SPAN BRIDGE OF TOTAL LENGTH = 69'-0"
REINFORCED CONCRETE FLOOR ON I-BEAMS
24' CLEAR ROADWAY WITH R.C. CAPS,
TIMBER PILES, END BENT 1 & BENT 2 CRUTCH PILES.
TO BE REMOVED.

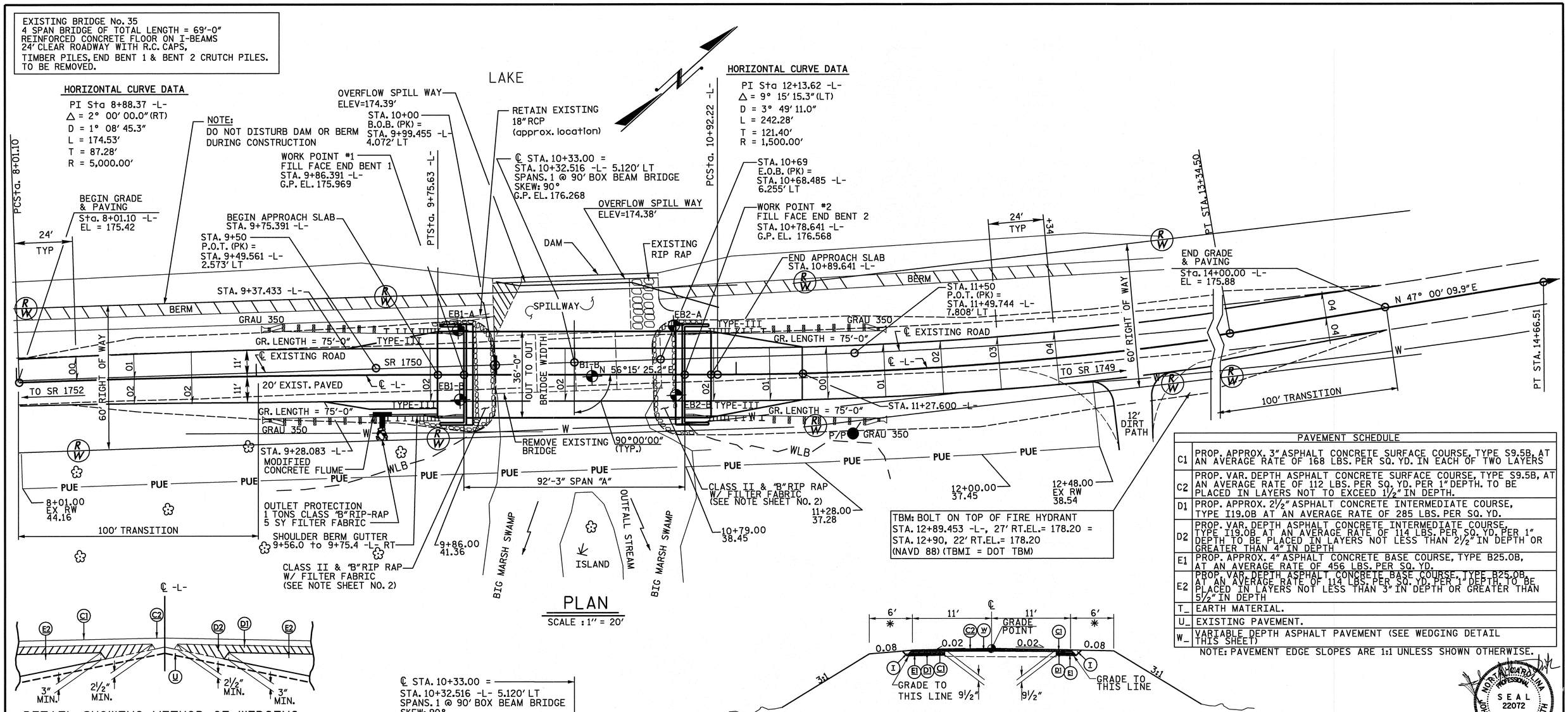

PLAN
SCALE : 1" = 20'

PAVEMENT SCHEDULE	
C1	PROP. APPROX. 3" ASPHALT CONCRETE SURFACE COURSE, TYPE S9.5B, AT AN AVERAGE RATE OF 168 LBS. PER SQ. YD. IN EACH OF TWO LAYERS
C2	PROP. VAR. DEPTH ASPHALT CONCRETE SURFACE COURSE, TYPE S9.5B, AT AN AVERAGE RATE OF 112 LBS. PER SQ. YD. PER 1" DEPTH. TO BE PLACED IN LAYERS NOT TO EXCEED 1½" IN DEPTH.
D1	PROP. APPROX. 2½" ASPHALT CONCRETE INTERMEDIATE COURSE, TYPE I19.0B AT AN AVERAGE RATE OF 285 LBS. PER SQ. YD.
D2	PROP. VAR. DEPTH ASPHALT CONCRETE INTERMEDIATE COURSE, TYPE I19.0B AT AN AVERAGE RATE OF 114 LBS. PER SQ. YD. PER 1" DEPTH TO BE PLACED IN LAYERS NOT LESS THAN 2½" IN DEPTH OR GREATER THAN 4" IN DEPTH
E1	PROP. APPROX. 4" ASPHALT CONCRETE BASE COURSE, TYPE B25.0B, AT AN AVERAGE RATE OF 456 LBS. PER SQ. YD.
E2	PROP. VAR. DEPTH ASPHALT CONCRETE BASE COURSE, TYPE B25.0B, AT AN AVERAGE RATE OF 114 LBS. PER SQ. YD. PER 1" DEPTH. TO BE PLACED IN LAYERS NOT LESS THAN 3" IN DEPTH OR GREATER THAN 5½" IN DEPTH
T_	EARTH MATERIAL.
U_	EXISTING PAVEMENT.
W_	VARIABLE DEPTH ASPHALT PAVEMENT (SEE WEDGING DETAIL THIS SHEET)

NOTE: PAVEMENT EDGE SLOPES ARE 1:1 UNLESS SHOWN OTHERWISE.

DETAIL SHOWING METHOD OF WEDGING

TYPICAL ROADWAY SECTION
✱ NOTE: WIDEN 3' FOR GUARDRAIL

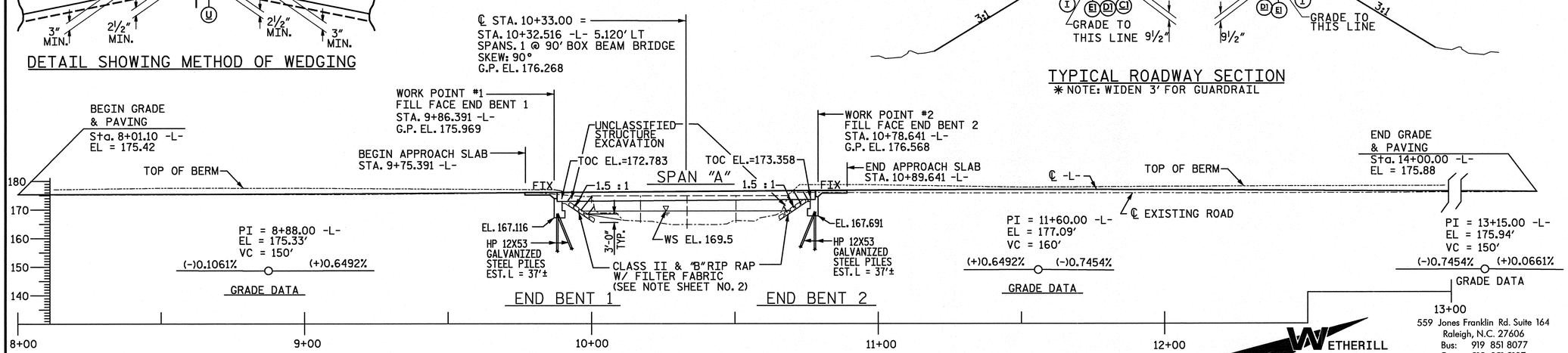

PROFILE ALONG ℄ SURVEY
SCALE : 1" = 20'

P:\03102\B-4250\BoxBeam\boxbeam Dgn\genB4250.dgn
3/21/2012 4:05:11 PM

DRAWN BY : J.C. PENDERGRAFT DATE : 4/11
CHECKED BY : J. DILWORTH DATE : 4/11

NORTH CAROLINA PROFESSIONAL SEAL 22072 ENGINEER JOHN ARTHUR DILWORTH
3-22-12

WBS NO. 33592.3.1
ROBESON COUNTY
STATION: 10+33.00
REPLACES BRIDGE NO. 35

STATE OF NORTH CAROLINA
DEPARTMENT OF TRANSPORTATION
RALEIGH

GENERAL DRAWING
BRG. # 35 ON SR 1750
OVER BIG MARSH SWAMP

ETHERILL ENGINEERING
559 Jones Franklin Rd. Suite 164
Raleigh, N.C. 27606
Bus: 919 851 8077
Fax: 919 851 8107
LICENCE NO. F-0377

TRANSPORTATION PLANNING/DESIGN - BRIDGE/STRUCTURE DESIGN
CIVIL/SITE DESIGN - GIS/GPS - CONSTRUCTION OBSERVATION

REVISIONS						SHEET NO.
NO.	BY:	DATE:	NO.	BY:	DATE:	1
1			3			TOTAL SHEETS
2			4			19

NOTES

1. PILES AT ALL BENTS SHALL BE DRIVEN TO A MINIMUM BEARING CAPACITY OF 45 TONS EACH.
2. WHEN DRIVING PILES, THE MAXIMUM BLOW COUNT SHALL NOT BE EXCEEDED.
3. THE QUANITY OF RIP RAP TO BE PAID FOR WILL BE THE ACTUAL NUMBER OF TONS OF EACH CLASS OF RIP RAP WHICH HAS BEEN INCORPORATED INTO THE COMPLETED AND ACCEPTED WORK. THE RIP RAP WILL BE MEASURED BY BEING WEIGHED IN TRUCKS ON CERTIFIED PLATFORM SCALES OR OTHER CERTIFIED WEIGHING DEVICES. THE QUANITY OF RIP RAP WILL BE PAID FOR AT THE CONTRACT UNIT PRICE PER TON.

PLAIN RIP RAP CLASS II (2'-0" THICK)		W/ FILTER FABRIC
END BENT NO. 1	= 150 TONS	160 S.Y.
END BENT NO. 2	= 150 TONS	160 S.Y.
TOTAL:	= 300 TONS	320 S.Y.

4. UPON INSTALLATION OF CLASS II RIP RAP (2'-0" THICK) WITH FILTER FABRIC BELOW, PLACE CLASS B RIP RAP WITHIN THE SURFACE VOIDS REMAINING. FILL ONLY THE VOIDS AND DO NOT OVERTOP THE CLASS II RIP RAP AT EACH END BENT. NO FILTER FABRIC WILL BE REQUIRED BETWEEN THE CLASS II RIP RAP AND CLASS B RIP RAP.
5. THIS STRUCTURE HAS BEEN DESIGNED IN ACCORDANCE WITH FHWA'S TECHNICAL ADVISORY T5140.20 (SCOUR AT BRIDGES).
6. THE EXISTING BRIDGE SHALL BE REMOVED BY SAWING AND/OR NON SHATTERING METHODS SUCH THAT DEBRIS WILL NOT FALL INTO THE WATER.
7. ADT 1625 FOR YEAR 2011.
8. DATUM EQUALITY 178.20' = 500.00' GEOTECH PLANS
9. THE CONTRACTOR IS TO NOT DISTURB ANY PART OF THE EXISTING DAM, BERM OR SPILLWAY.
10. DO NOT DISTURB THE EXISTING EARTH BERM LOCATED ALONG WOODDUCK LAKE. PROPOSED CONSTRUCTION SHOULD BE LIMITED TO THE EXISTING DITCH LINE. THE CONTRACTOR SHOULD COORDINATE WITH THE RESIDENT ENGINEER AND MODIFY THE CONSTRUCTION PLANS ACCORDINGLY.
11. FOR PILES, SEE SPECIAL PROVISIONS.
12. THIS BRIDGE HAS BEEN DESIGNED BY THE STRENGTH DESIGN METHOD AS SPECIFIED IN AASHTO STANDARD SPECIFICATIONS.
13. ASSUMED LIVE LOAD = HS 20 OR ALTERNATE LOADING, EXCEPT THAT THE BOX BEAM UNITS HAVE BEEN DESIGNED FOR HS25.
14. FOR CRANE SAFETY, SEE SPECIAL PROVISIONS.
15. FOR GROUT FOR STRUCTURES, SEE SPECIAL PROVISIONS.
16. FOR SUBMITTAL OF WORKING DRAWINGS, SEE SPECIAL PROVISIONS.
17. FOR FALSEWORK AND FORMWORK, SEE SPECIAL PROVISIONS.
18. FOR OTHER DESIGN DATA AND GENERAL NOTES, SEE SHEET SN.
19. FOR EROSION CONTROL MEASURES, SEE EROSION CONTROL PLANS.

⊕ DENOTES GEO-TECH BORING HOLE LOCATIONS.

HYDRAULIC DATA

DESIGN DISCHARGE	= 1000 CFS
FREQUENCY OF DESIGN FLOOD	= 25 YR.
DESIGN HIGH WATER ELEVATION	= 171.0
DRAINAGE AREA	= 24.4 SQ. MI.
BASIC DISCHARGE (Q100)	= 1400 CFS
BASIC HIGH WATER ELEVATION	= 172.0

OVERTOPPING FLOOD DATA

OVERTOPPING DISCHARGE	= 2200 CFS
FREQUENCY OF OVERTOPPING FLOOD	= 500 YR +
OVERTOPPING FLOOD ELEVATION	= 175.4

TOTAL BILL OF MATERIAL

	REMOVAL OF EXISTING STRUCTURE	UNCLASSIFIED STRUCTURE EXCAVATION	CLASS A CONCRETE	BRIDGE APPROACH SLABS	REINFORCING STEEL	HP 12x53 GALVANIZED STEEL PILES		CONCRETE BARRIIER RAIL	RIP RAP CLASS II (2'-0" THICK)	GEOTEXTILE FOR DRAINAGE	RIP RAP CLASS "B"	ELASTOMERIC BEARINGS	3'-0" x 2'-9" PRESTRESSED CONCRETE BOX BEAM	
	LUMP SUM	LUMP SUM	CU. YDS.	LUMP SUM	LBS.	NO.	LIN. FT.	LIN. FT.	TONS	SQ. YDS.	TONS	LUMP SUM	NO.	LIN. FT.
SUPERSTRUCTURE				LUMP SUM				180.00				LUMP SUM	12	1080.00
END BENT NO. 1			37.1		4913	11	415.00		150	205	40			
END BENT NO. 2			37.1		4913	11	415.00		150	205	40			
TOTAL	LUMP SUM	LUMP SUM	74.2	LUMP SUM	9826	22	830.00	180.00	300	410	80	LUMP SUM	12	1080.00

NORTH CAROLINA PROFESSIONAL SEAL 22072 ENGINEER JOHN ARTHUR DILWORTH

WBS NO. 33592.3.1

ROBESON COUNTY

STATION: 10+33.00 -L-

REPLACES BRIDGE NO. 35

STATE OF NORTH CAROLINA
DEPARTMENT OF TRANSPORTATION
RALEIGH

BRIDGE #61 ON SR 1451
OVER SANDY CREEK

WETHERILL ENGINEERING
559 Jones Franklin Rd. Suite 164
Raleigh, N.C. 27606
Bus: 919 851 8077
Fax: 919 851 8107
LICENCE NO. F-0377

TRANSPORTATION PLANNING/DESIGN - BRIDGE/STRUCTURE DESIGN
CIVIL/SITE DESIGN - GIS/GPS - CONSTRUCTION OBSERVATION

REVISIONS						SHEET NO.
NO.	BY:	DATE:	NO.	BY:	DATE:	2
1			3			TOTAL SHEETS
2			4			19

DRAWN BY : J.C. PENDERGRAFT DATE : 6/07
CHECKED BY : J. DILWORTH DATE : 6/07

P:\03102\B-4250\BoxBeam\boxbeam DgnTBOM.dgn
3/28/2012 7:32:56 AM

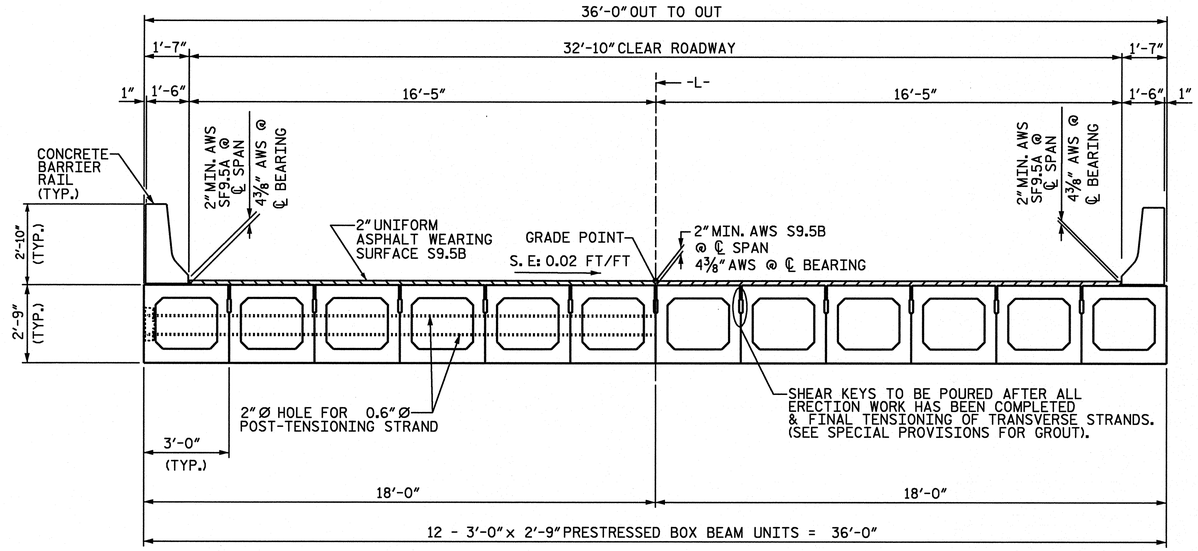

HALF - SECTION AT INTERMEDIATE DIAPHRAGMS

HALF - SECTION AT VOIDS

TYPICAL SECTION

NOTES

ASSUMED LIVE LOAD = HS20 OR ALTERNATE LOADING, EXCEPT THAT THE BEAMS HAVE BEEN DESIGNED FOR HS25.

ALL PRESTRESSING STRANDS SHALL BE 7-WIRE LOW RELAXATION GRADE 270 STRANDS AND SHALL CONFORM TO AASHTO M203 EXCEPT FOR SAMPLING REQUIREMENTS WHICH SHALL BE IN ACCORDANCE WITH THE STANDARD SPECIFICATIONS.

ALL REINFORCING STEEL CAST WITH THE BOX BEAM SECTIONS SHALL BE GRADE 60 AND SHALL BE INCLUDED IN THE UNIT PRICE BID FOR PRESTRESSED CONCRETE BOX BEAMS.

RECESSES FOR TRANSVERSE STRANDS SHALL BE GROUTED AFTER THE TENSIONING OF THE STRANDS.

THE 2½" Ø DOWEL HOLES AT EACH END OF BOX BEAM SECTIONS SHALL BE FILLED WITH GROUT. SEE STANDARD SPECIFICATIONS.

THE TRANSFER OF LOAD FROM THE ANCHORAGES TO THE BOX BEAM UNIT SHALL BE DONE WHEN THE CONCRETE HAS REACHED A COMPRESSIVE STRENGTH OF NOT LESS THAN 5600 PSI.

PRESTRESSING STRANDS SHALL BE CUT FLUSH WITH THE BOX BEAM UNIT ENDS.

APPLY EPOXY PROTECTIVE COATING TO BOX BEAM UNIT ENDS. FOR EPOXY PROTECTIVE COATING, SEE STANDARD SPECIFICATIONS.

FOR PRESTRESSED CONCRETE BOX BEAMS AND ELASTOMERIC BEARINGS, SEE STANDARD SPECIFICATIONS.

THE LOCATION OF THE VOID DRAINS MAY BE SHIFTED SLIGHTLY WHERE NECESSARY TO CLEAR PRESTRESSING STRANDS OR TRANSVERSE REINFORCING STEEL.

ALL MATERIAL AND WORKMANSHIP SHALL COMPLY WITH THE APPLICABLE REQUIREMENTS OF THE STANDARD SPECIFICATIONS FOR ROADS AND STRUCTURES OF THE NC DEPARTMENT OF TRANSPORTATION DATED JANUARY 2012 AND WITH THE SPECIAL PROVISIONS.

UNLESS OTHERWISE NOTED ON THE PLANS, ALL EXPOSED CORNERS ON STRUCTURE SHALL BECHAMFERED ¾".

FOR GROUT FOR STRUCTURES, SEE SPECIAL PROVISIONS

THE 2" Ø BACKER ROD SHALL CONFORM TO THE REQUIREMENTS OF TYPE M BOND BREAKER. SEE SECTION 1028 OF THE STANDARD SPECIFICATIONS.

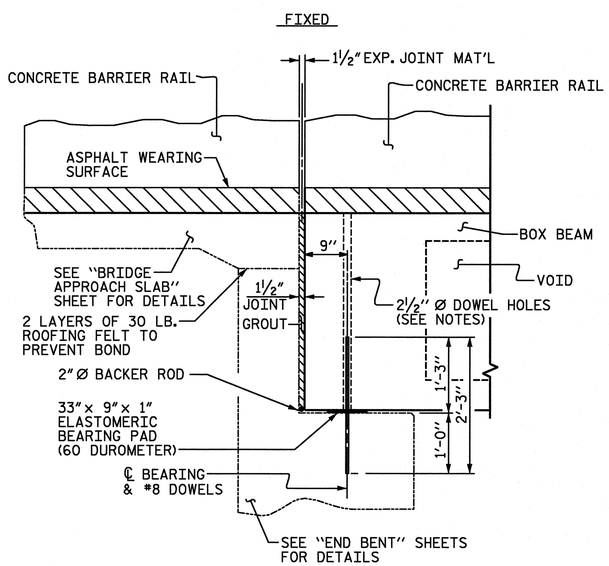

SECTION AT END BENT

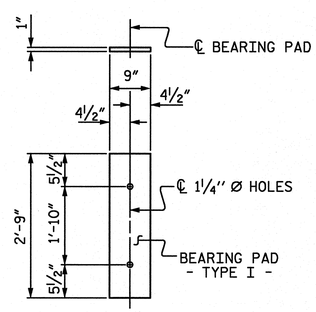

FIXED END
(TYPE I - 24 REQ'D)

ELASTOMERIC BEARING DETAILS

ELASTOMER IN ALL BEARINGS SHALL BE 60 DUROMETER HARDNESS

NORTH CAROLINA PROFESSIONAL SEAL 22072 ENGINEER JOHN ARTHUR DILWORTH 3-22-12

WBS NO. 33592.3.1

ROBESON COUNTY

STATION: 10+33.00 -L-

REPLACES BRIDGE NO. 35

STATE OF NORTH CAROLINA
DEPARTMENT OF TRANSPORTATION
RALEIGH
STANDARD

3'-0" X 2'-9"
PRESTRESSED CONCRETE
BOX BEAM UNIT

WETHERILL ENGINEERING
559 Jones Franklin Rd. Suite 164
Raleigh, N.C. 27606
Bus: 919 851 8077
Fax: 919 851 8107
LICENCE NO. F-0377

TRANSPORTATION PLANNING/DESIGN - BRIDGE/STRUCTURE DESIGN
CIVIL/SITE DESIGN - GIS/GPS - CONSTRUCTION OBSERVATION

REVISIONS						SHEET NO.
NO.	BY:	DATE:	NO.	BY:	DATE:	3
1			3			TOTAL SHEETS
2			4			19

ASSEMBLED BY : JCP	DATE : 5-2-07
CHECKED BY : JAD	DATE : 5-2-07
DRAWN BY : TLA 5/05	ADDED 7/11/05R
CHECKED BY : GM 6/05	REV. 5/1/06 TLA/GM

STD. NO. PCBB1

P:\03102\B-4250\BoxBeam\boxbeam Dgn\1-pcbb1.dgn
3/21/2012 3:58:04 PM

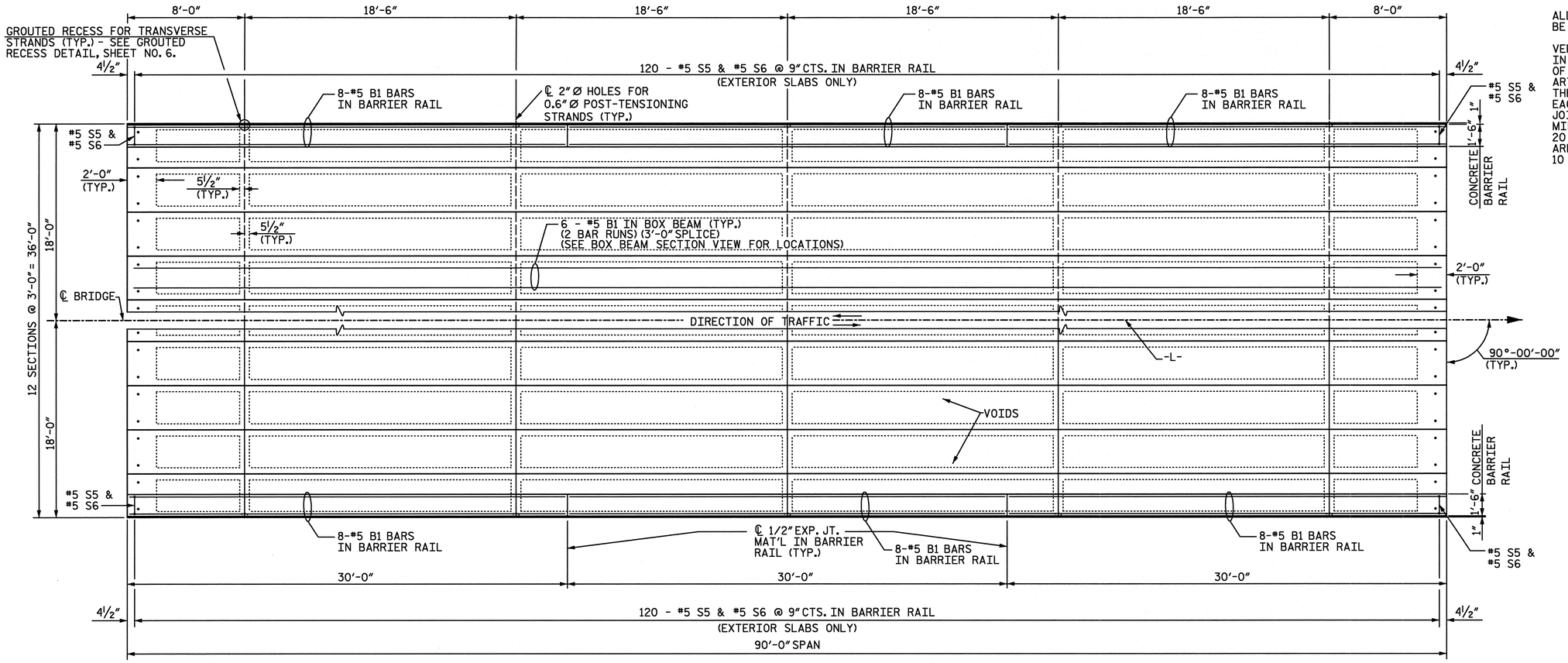

SUPERSTRUCTURE PLAN OF SPAN "A"

NOTES:

ALL REINFORCING STEEL IN BARRIER RAILS SHALL BE EPOXY COATED.

VERTICAL GROOVED CONTRACTION JOINTS, ½" IN DEPTH, SHALL BE TOOLED IN ALL EXPOSED FACES OF THE BARRIER RAIL AND IN ACCORDANCE WITH ARTICLE 825-10(B) OF THE STANDARD SPECIFICATIONS. THE CONTRACTION JOINT SHALL BE LOCATED AT EACH THIRD POINT BETWEEN BARRIER RAIL EXPANSION JOINTS. ONLY ONE CONTRACTION JOINT IS REQUIRED AT MIDPOINT OF BARRIER RAIL SEGMENTS LESS THAN 20 FEET IN LENGTH AND NO CONTRACTION JOINTS ARE REQUIRED FOR THOSE SEGMENTS LESS THAN 10 FEET IN LENGTH.

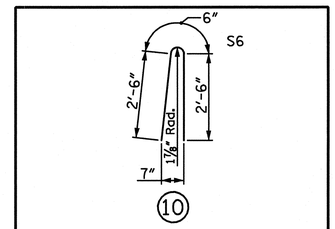

BAR TYPE

BAR DIMENSIONS ARE OUT TO OUT

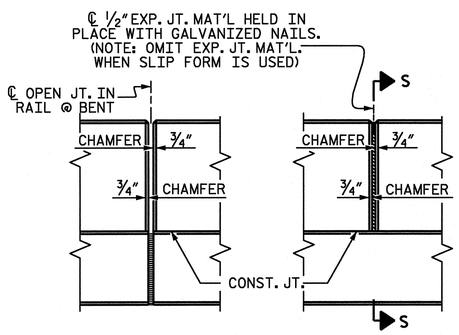

ELEVATION AT EXPANSION JOINTS

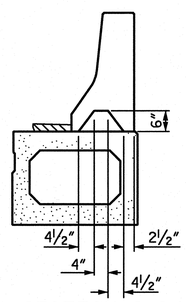

SECTION S-S

AT DAM IN OPEN JOINT (THIS IS TO BE USED ONLY WHEN SLIP FORM IS USED)

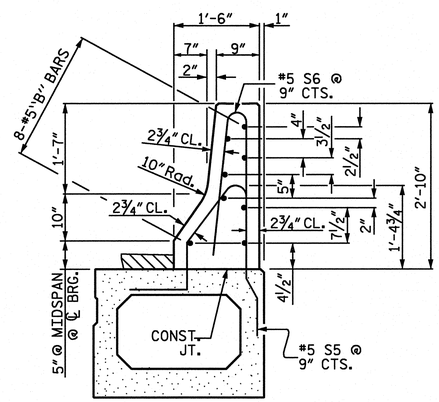

SECTION THRU RAIL

BARRIER RAIL DETAILS

BILL OF MATERIAL FOR CONCRETE BARRIER RAIL									
BAR	BARS PER SPAN				TOTAL NO.	SIZE	TYPE	LENGTH	WEIGHT
		SPAN A							
*B1		48			48	#5	STR	29'-7"	1481
*S6		240			240	#5	10	5'-6"	1377
*EPOXY COATED REINFORCING STEEL 2858 LBS.									
CLASS AA CONCRETE 19.7 CU.YDS.									
TOTAL LIN. FT. OF CONCRETE BARRIER RAIL 180.00									

WBS NO. 33592.3.1

ROBESON COUNTY

STATION: 10+33.00 -L-

REPLACES BRIDGE NO. 35

NORTH CAROLINA PROFESSIONAL SEAL 22072 ENGINEER JOHN ARTHUR DILWORTH

WETHERILL ENGINEERING

559 Jones Franklin Rd. Suite 164
Raleigh, N.C. 27606
Bus: 919 851 8077
Fax: 919 851 8107
LICENCE NO. F-0377

TRANSPORTATION PLANNING/DESIGN - BRIDGE/STRUCTURE DESIGN
CIVIL/SITE DESIGN - GIS/GPS - CONSTRUCTION OBSERVATION

STATE OF NORTH CAROLINA
DEPARTMENT OF TRANSPORTATION
RALEIGH

SUPERSTRUCTURE PLAN OF SPAN "A" & CONCRETE BARRIER RAIL

REVISIONS						SHEET NO.
NO.	BY:	DATE:	NO.	BY:	DATE:	4
1			3			TOTAL SHEETS
2			4			19

DRAWN BY : J.C. PENDERGRAFT DATE : 6/07
CHECKED BY : J. DILWORTH DATE : 6/07

P:\03102\B-4250\BoxBeam\boxbeam Dgn\spans.dgn
3/22/2012 6:50:19 AM

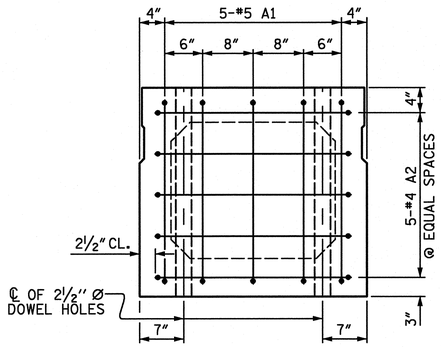

END ELEVATION

SHOWING PLACEMENT OF #5 & #4 "A" BARS AND LOCATION OF DOWEL HOLES. (INTERIOR BOX BEAM SECTION SHOWN-EXTERIOR SECTION SIMILAR EXCEPT SHEAR KEY LOCATION. STRAND LAYOUT NOT SHOWN.)

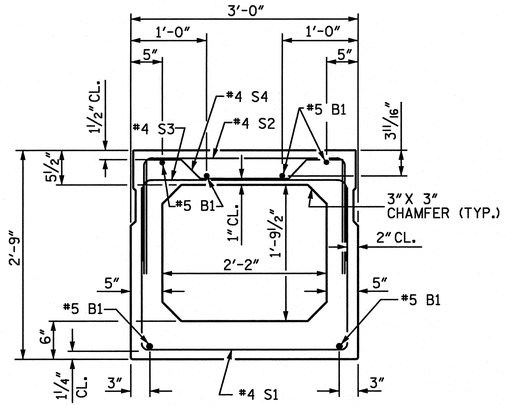

INTERIOR BOX BEAM SECTION

(STRAND LAYOUT NOT SHOWN)

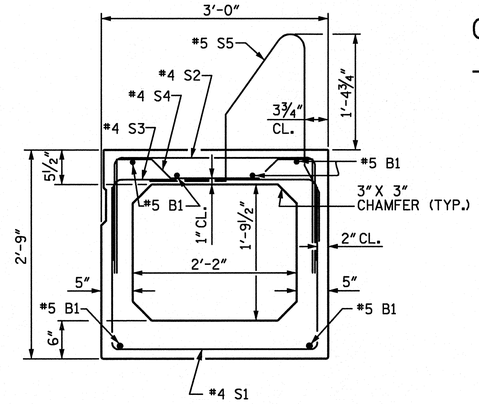

EXTERIOR BOX BEAM SECTION

(STRAND LAYOUT NOT SHOWN)

0.6" Ø LOW RELAXATION STRAND LAYOUT

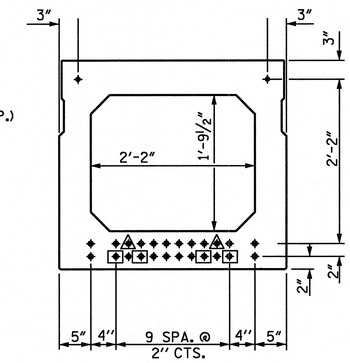

TYPICAL STRAND LOCATION

(26 STRANDS REQUIRED)

(INTERIOR BOX BEAM SECTION SHOWN-EXTERIOR SECTION SIMILAR EXCEPT SHEAR KEY LOCATION)

DEBONDING LEGEND

- ● FULLY BONDED STRANDS
- STRANDS DEBONDED FOR 6'-0" FROM END OF BOX BEAM
- STRANDS DEBONDED FOR 4'-0" FROM END OF BOX BEAM

BAR TYPES

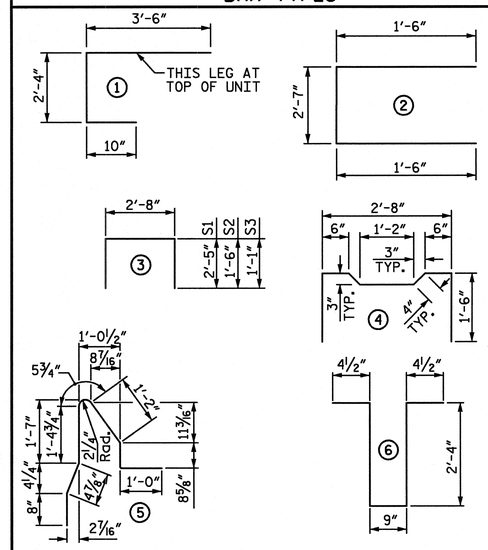

ALL BAR DIMENSIONS ARE OUT TO OUT

BILL OF MATERIAL FOR ONE BOX BEAM SECTION

				EXTERIOR UNIT		INTERIOR UNIT	
BAR	NUMBER	SIZE	TYPE	LENGTH	WEIGHT	LENGTH	WEIGHT
A1	10	#5	1	6'-8"	70	6'-8"	70
A2	40	#4	2	5'-7"	149	5'-7"	149
B1	12	#5	STR	46'-4"	580	46'-4"	580
K1	15	#4	6	6'-2"	62	6'-2"	62
K2	10	#4	STR	2'-7"	17	2'-7"	17
S1	72	#4	3	7'-6"	361	7'-6"	361
S2	72	#4	3	5'-8"	273	5'-8"	273
S3	127	#4	3	4'-10"	410	4'-10"	410
S4	55	#4	4	5'-10"	214	5'-10"	214
✳ S5	120	#5	5	5'-10"	730	--	--
REINFORCING STEEL					2136 LBS.		2136 LBS.
✳ EPOXY COATED REINF. STEEL					730 LBS.		
7000 P.S.I. CONCRETE					15.9 CU. YDS.		15.9 CU. YDS.
0.6" Ø L.R. STRANDS					No. 26		No. 26

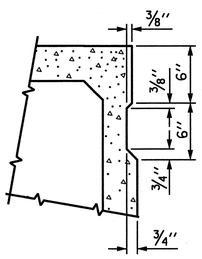

SHEAR KEY DETAIL

NOTE: OMIT SHEAR KEY ON OUTSIDE FACE OF EXTERIOR BOX BEAMS.

GRADE 270 STRANDS

	0.6" Ø L.R.
AREA (SQUARE INCHES)	0.217
ULTIMATE STRENGTH (LBS. PER STRAND)	58,600
APPLIED PRESTRESS (LBS. PER STRAND)	43,950

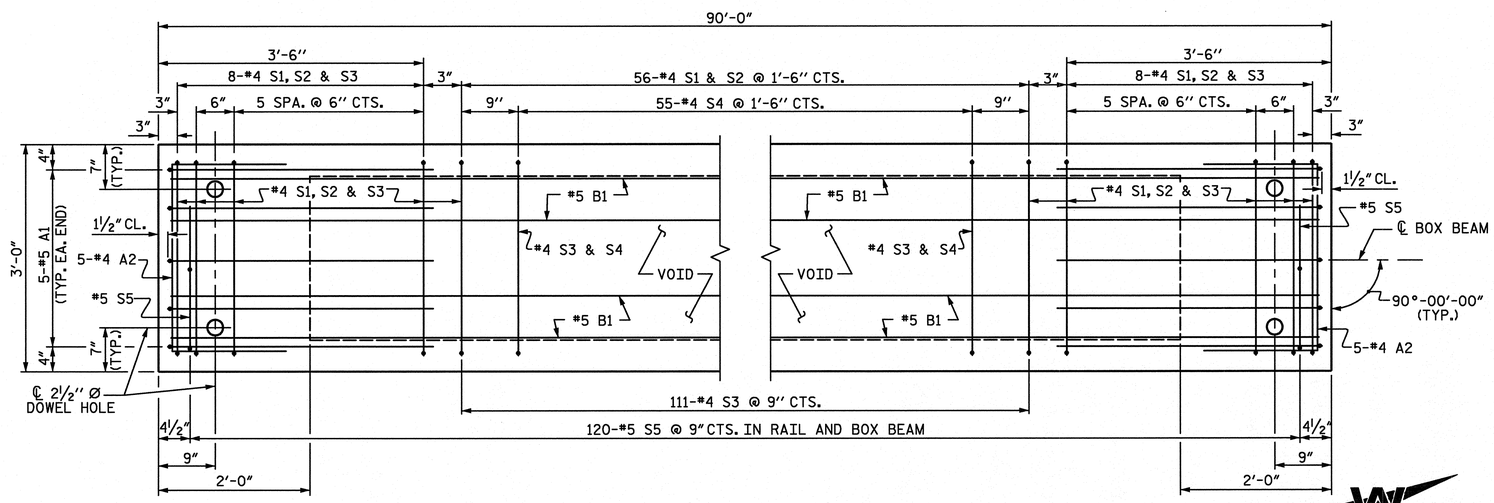

PLAN OF BOX BEAM

EXTERIOR UNIT SHOWN, INTERIOR UNIT SIMILAR EXCEPT OMIT #5 S5 BARS.
FOR LOCATION OF DIAPHRAGMS, SEE PLAN OF SPANS.
FOR REINFORCING STEEL IN DIAPHRAGMS, SEE DIAPHRAGM DETAILS.

WETHERILL ENGINEERING
559 Jones Franklin Rd. Suite 164
Raleigh, N.C. 27606
Bus: 919 851 8077
Fax: 919 851 8107
LICENCE NO. F-0377

TRANSPORTATION PLANNING/DESIGN - BRIDGE/STRUCTURE DESIGN
CIVIL/SITE DESIGN - GIS/GPS - CONSTRUCTION OBSERVATION

NORTH CAROLINA PROFESSIONAL SEAL 22072 ENGINEER JOHN ARTHUR DILWORTH 3-22-12

WBS NO. 33592.3.1

ROBESON COUNTY

STATION: 10+33.00 -L-

REPLACES BRIDGE NO. 35

STD. NO. PCBB4

STATE OF NORTH CAROLINA
DEPARTMENT OF TRANSPORTATION
RALEIGH

STANDARD
3'-0" X 2'-9"
PRESTRESSED CONCRETE
BOX BEAM UNIT
SPAN "A"

REVISIONS						SHEET NO.
NO.	BY:	DATE:	NO.	BY:	DATE:	5
1			3			TOTAL SHEETS
2			4			19

DRAWN BY : J.C. PENDERGRAFT DATE : 6/07
CHECKED BY : J. DILWORTH DATE : 6/07

P:\03102\B-4250\BoxBeam\boxbeam Dgn\pcbb4.dgn
3/22/2012 6:59:39 AM

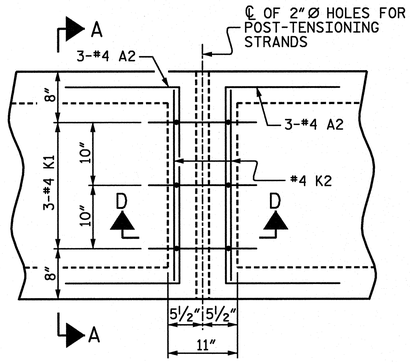

PLAN

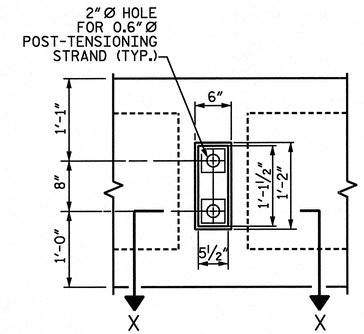

VIEW Y-Y

SHOWING ELEVATION VIEW OF GROUTED RECESS

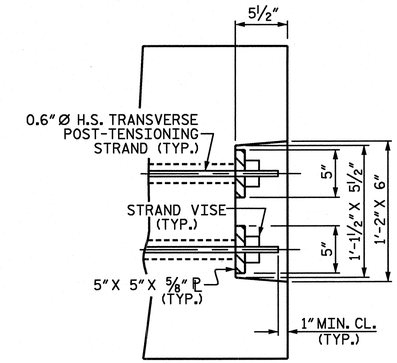

DETAIL "C"

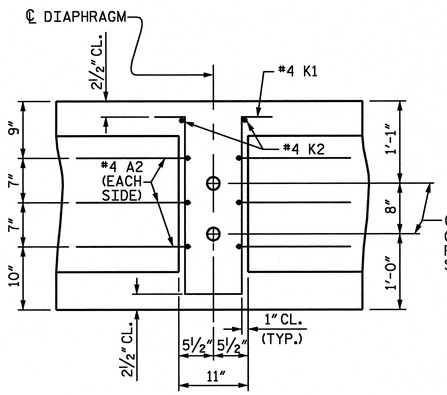

SECTION D-D

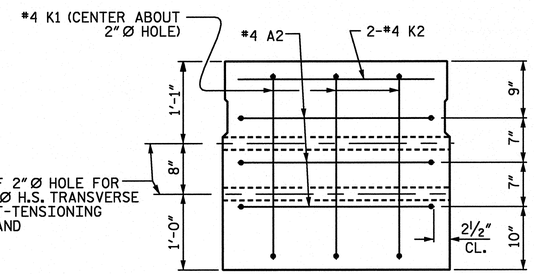

SECTION A-A

VOIDS NOT SHOWN

DOUBLE DIAPHRAGM DETAILS

#4 "S" BARS NOT SHOWN. #4 "S" BARS MAY BE SHIFTED SLIGHTLY TO CLEAR 2" Ø HOLE.

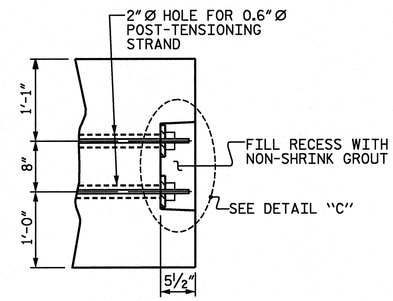

PART SECTION AT RECESS

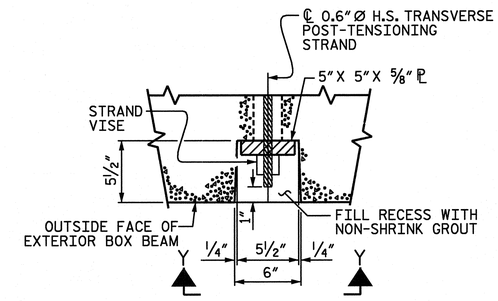

SECTION X-X

SHOWING PLAN VIEW OF GROUTED RECESS

GROUTED RECESS DETAIL AT END OF POST-TENSIONED STRANDS OF EXTERIOR BOX BEAM

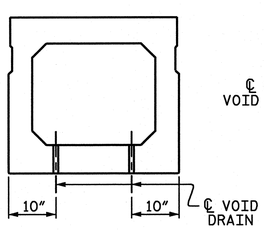

SECTION B-B

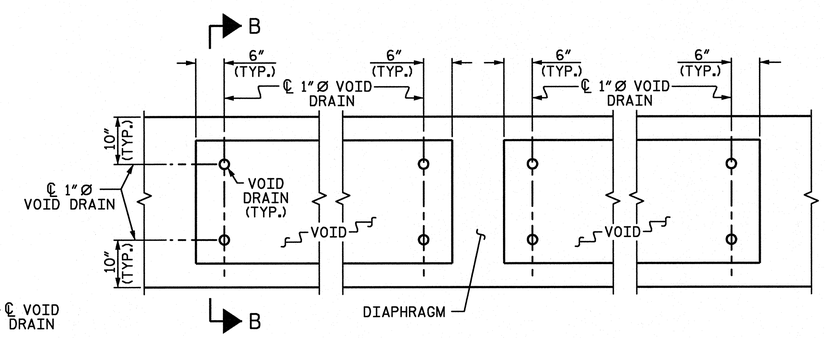

PART PLAN

VOID DRAIN DETAILS

(DIMENSIONS SHOWN ARE TYPICAL FOR EACH VOID)

DEAD LOAD DEFLECTION AND CAMBER	
	3'-0" x 2'-9"
	0.6"Ø L.R. STRAND
	SPAN "A"
CAMBER (BEAM ALONE IN PLACE)	3⅛" ↑
DEFLECTION DUE TO WEARING SURFACE *	¾" ↓
FINAL CAMBER	2⅜" ↑

* INCLUDE FUTURE WEARING SURFACE

WBS NO. 33592.3.1

ROBESON COUNTY

STATION: 10+33.00 -L-

REPLACES BRIDGE NO. 35

STD NO. PCBB5

STATE OF NORTH CAROLINA
DEPARTMENT OF TRANSPORTATION
RALEIGH

STANDARD

3'-0" X 2'-9"
PRESTRESSED CONCRETE
BOX BEAM UNIT

WETHERILL ENGINEERING
559 Jones Franklin Rd. Suite 164
Raleigh, N.C. 27606
Bus: 919 851 8077
Fax: 919 851 8107
LICENCE NO. F-0377

TRANSPORTATION PLANNING/DESIGN - BRIDGE/STRUCTURE DESIGN
CIVIL/SITE DESIGN - GIS/GPS - CONSTRUCTION OBSERVATION

REVISIONS								SHEET NO.
NO.	BY:	DATE:	NO.	BY:	DATE:			6
1			3					TOTAL SHEETS
2			4					19

ASSEMBLED BY : JCP	DATE : 5-16-07
CHECKED BY :	DATE :
DRAWN BY : TLA 5/05	ADDED 7/11/05
CHECKED BY : GM 6/05	REV. 5/1/06 TLA/GM

P:\03102\B-4250\BoxBeam\boxbeam Dgn\pcbb5.dgn
3/22/2012 7:02:37 AM

NOTES:

STIRRUPS IN CAP MAY BE SHIFTED AS NECESSARY TO CLEAR DOWELS.

FOR SECTION A-A SEE SHEET 2 OF 3.
FOR MISC. DETAILS SEE SHEET 2 OF 3.

HP 12x53 STEEL PILES SHALL BE GALVANIZED IN ACCORDANCE WITH ARTICLE 1076-1 OF THE STANDARD SPECIFICATIONS.

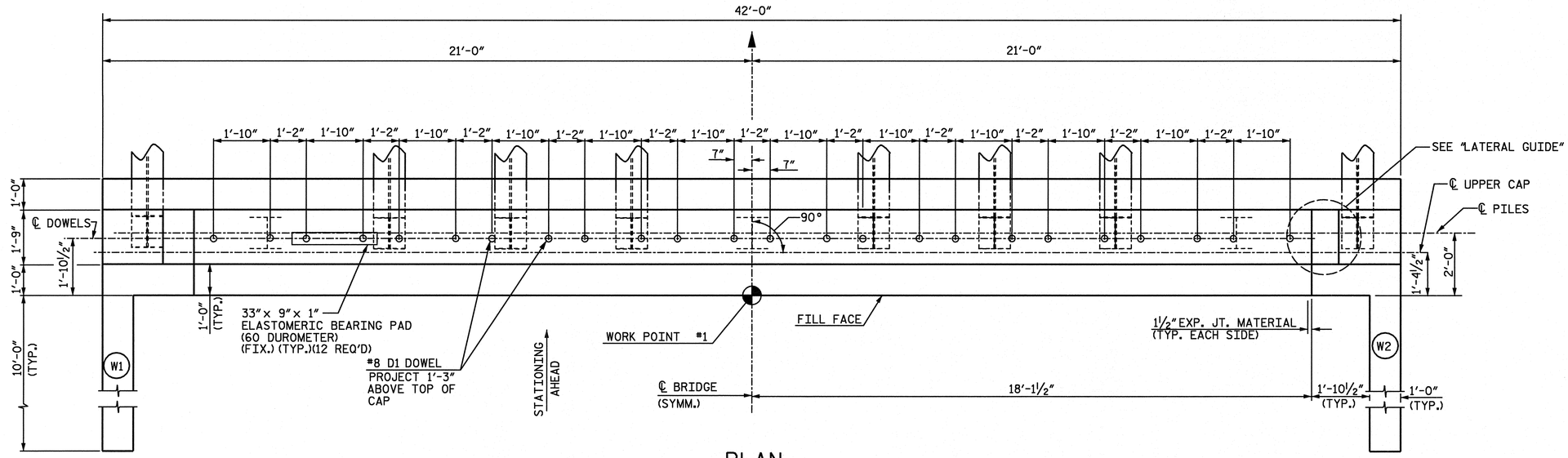

PLAN

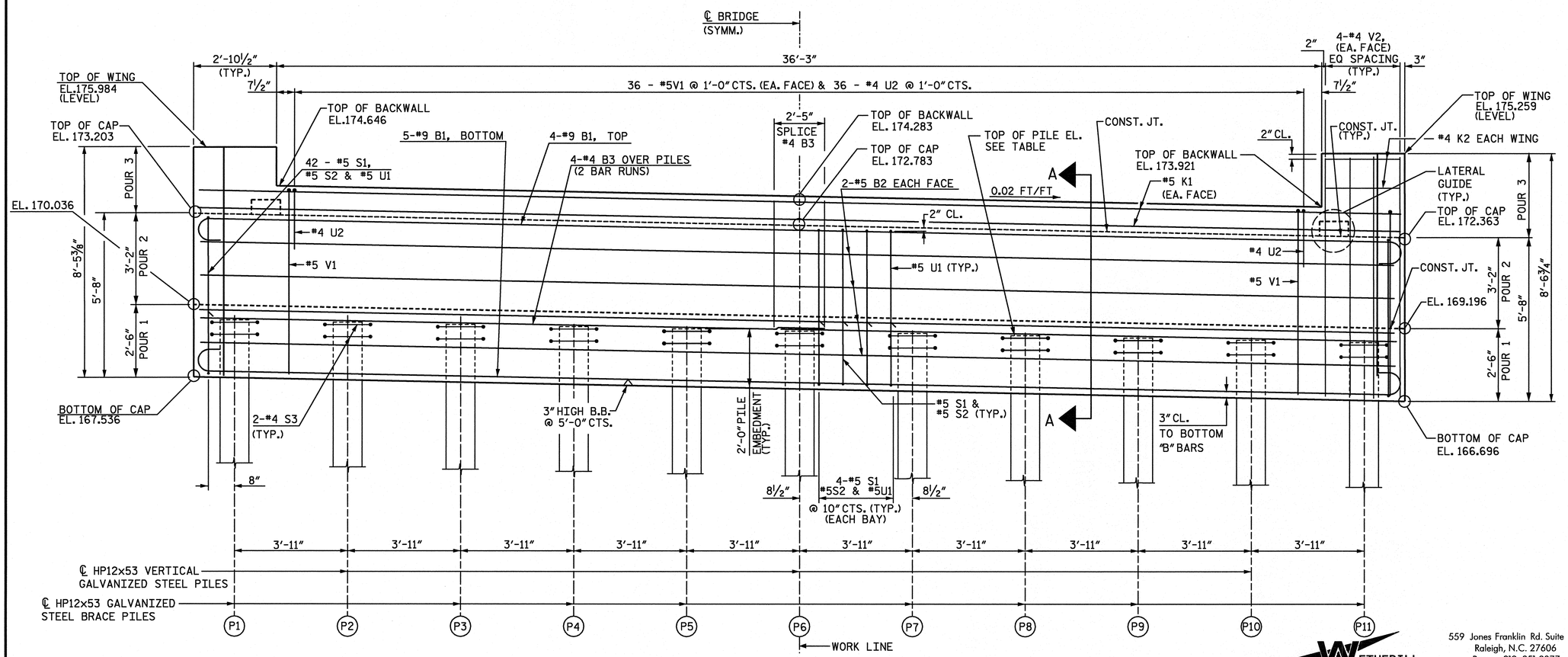

ELEVATION

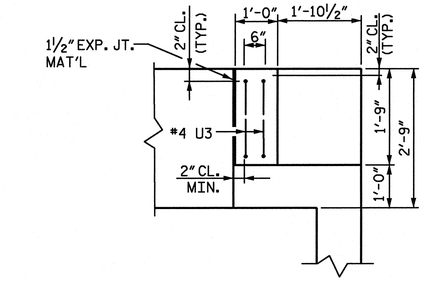

PLAN

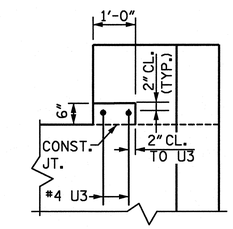

ELEVATION

LATERAL GUIDE

TOP OF PILE ELEVATION	
PILE LOCATION	ELEVATION
P1	169.508
P2	169.429
P3	169.351
P4	169.272
P5	169.194
P6	169.116
P7	169.037
P8	168.959
P9	168.881
P10	168.802
P11	168.724

NORTH CAROLINA PROFESSIONAL SEAL 22072 ENGINEER JOHN ARTHUR DILWORTH
3-22-12

WBS NO. 33592.3.1

ROBESON COUNTY

STATION: 10+33.00 -L-

REPLACES BRIDGE NO. 35

SHEET 1 OF 3

STATE OF NORTH CAROLINA
DEPARTMENT OF TRANSPORTATION
RALEIGH

SUBSTRUCTURE
END BENT 1

WETHERILL ENGINEERING
559 Jones Franklin Rd. Suite 164
Raleigh, N.C. 27606
Bus: 919 851 8077
Fax: 919 851 8107
LICENCE NO. F-0377

TRANSPORTATION PLANNING/DESIGN - BRIDGE/STRUCTURE DESIGN
CIVIL/SITE DESIGN - GIS/GPS - CONSTRUCTION OBSERVATION

REVISIONS						SHEET NO.
NO.	BY:	DATE:	NO.	BY:	DATE:	7
1			3			TOTAL SHEETS
2			4			19

DRAWN BY : J.C. PENDERGRAFT DATE : 6/07
CHECKED BY : J. DILWORTH DATE : 6/07

P:\03102\B-4250\BoxBeam\boxbeam Dgn\endbents.dgn
3/22/2012 7:04:54 AM

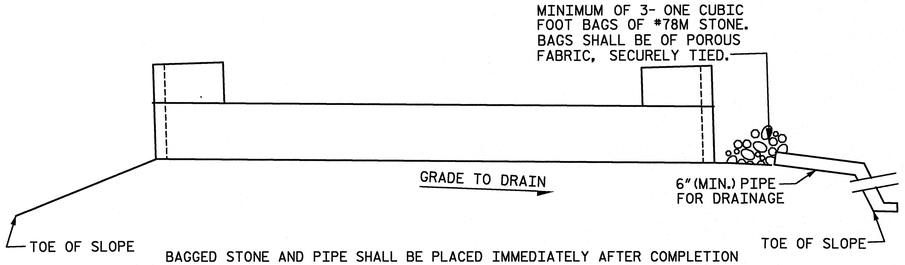

BAGGED STONE AND PIPE SHALL BE PLACED IMMEDIATELY AFTER COMPLETION OF END BENT EXCAVATION. PIPE MAY BE EITHER CONCRETE, CORRUGATED STEEL, CORRUGATED ALUMINUM ALLOY, OR CORRUGATED PLASTIC. PERFORATED PIPE WILL NOT BE ALLOWED.

BAGGED STONE SHALL REMAIN IN PLACE UNTIL THE ENGINEER DIRECTS THAT IT BE REMOVED. THE CONTRACTOR SHALL REMOVE AND DISPOSE OF SILT ACCUMULATIONS AT BAGGED STONE WHEN SO DIRECTED BY THE ENGINEER. BAGS SHALL BE REMOVED AND REPLACED WHENEVER THE ENGINEER DETERMINES THAT THEY HAVE DETERIORATED AND LOST THEIR EFFECTIVENESS.

NO SEPARATE PAYMENT WILL BE MADE FOR THIS WORK AND THE ENTIRE COST OF THIS WORK SHALL BE INCLUDED IN THE UNIT CONTRACT PRICE BID FOR THE SEVERAL PAY ITEMS.

TEMPORARY DRAINAGE AT END BENT

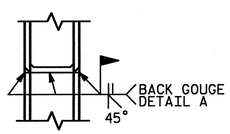

✳PILE VERTICAL

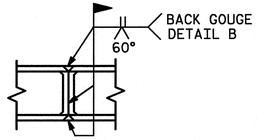

✳PILE HORIZONTAL OR VERTICAL

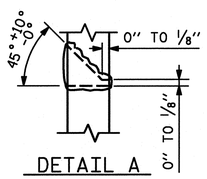

DETAIL A

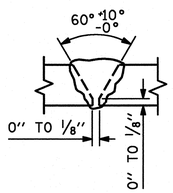

DETAIL B

✳POSITION OF PILE DURING WELDING.

PILE SPLICE DETAILS

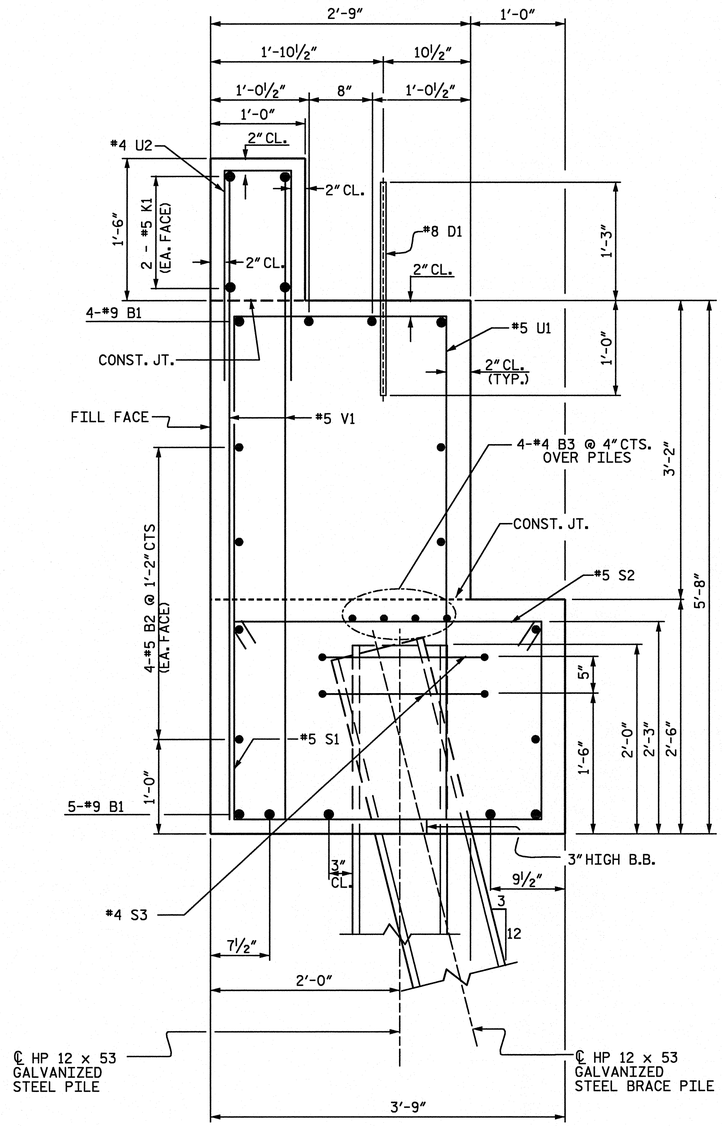

SECTION A-A

WETHERILL ENGINEERING

559 Jones Franklin Rd. Suite 164
Raleigh, N.C. 27606
Bus: 919 851 8077
Fax: 919 851 8107
LICENCE NO. F-0377

TRANSPORTATION PLANNING/DESIGN - BRIDGE/STRUCTURE DESIGN
CIVIL/SITE DESIGN - GIS/GPS - CONSTRUCTION OBSERVATION

NORTH CAROLINA PROFESSIONAL SEAL 22072 ENGINEER JOHN ARTHUR DILWORTH 3-22-12

WBS NO. 33592.3.1

ROBESON COUNTY

STATION: 10+33.00 -L-

REPLACES BRIDGE NO. 35

SHEET 2 OF 3

STATE OF NORTH CAROLINA
DEPARTMENT OF TRANSPORTATION
RALEIGH

SUBSTRUCTURE
END BENT 1

REVISIONS						SHEET NO.
NO.	BY:	DATE:	NO.	BY:	DATE:	8
1			3			TOTAL SHEETS
2			4			19

DRAWN BY : J.C. PENDERGRAFT DATE : 6/07
CHECKED BY : J. DILWORTH DATE : 6/07

P:\03102\B-4250\BoxBeam\boxbeam Dgn\endbents.dgn
3/22/2012 7:05:04 AM

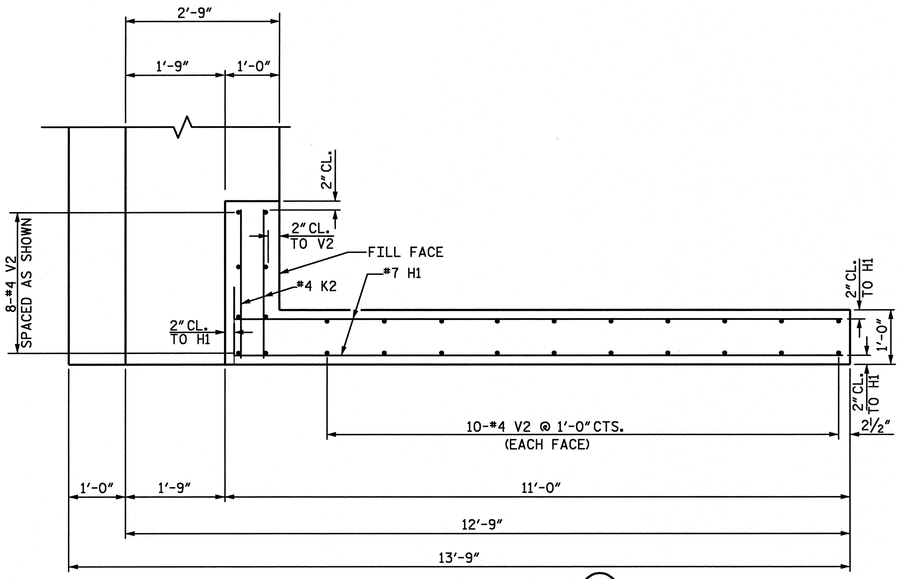

PLAN OF WING W1

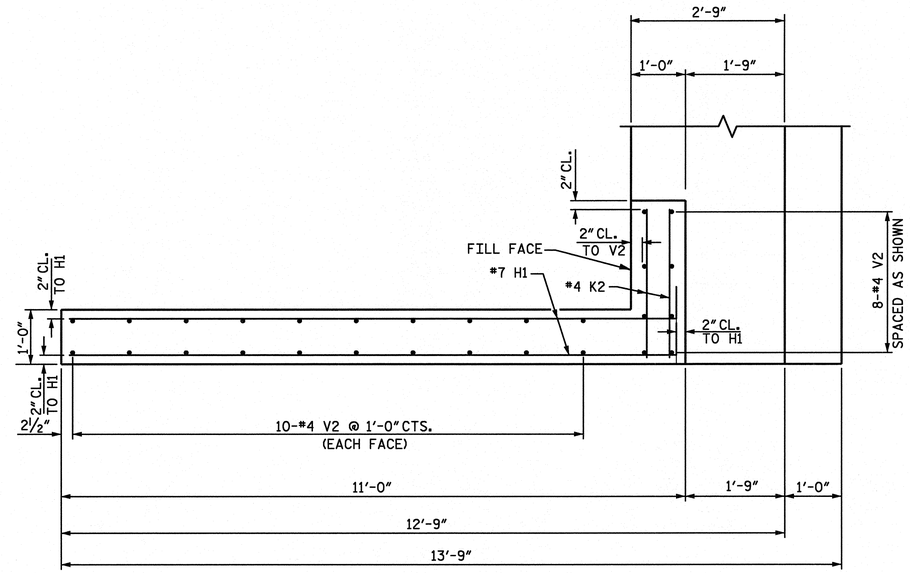

PLAN OF WING W2

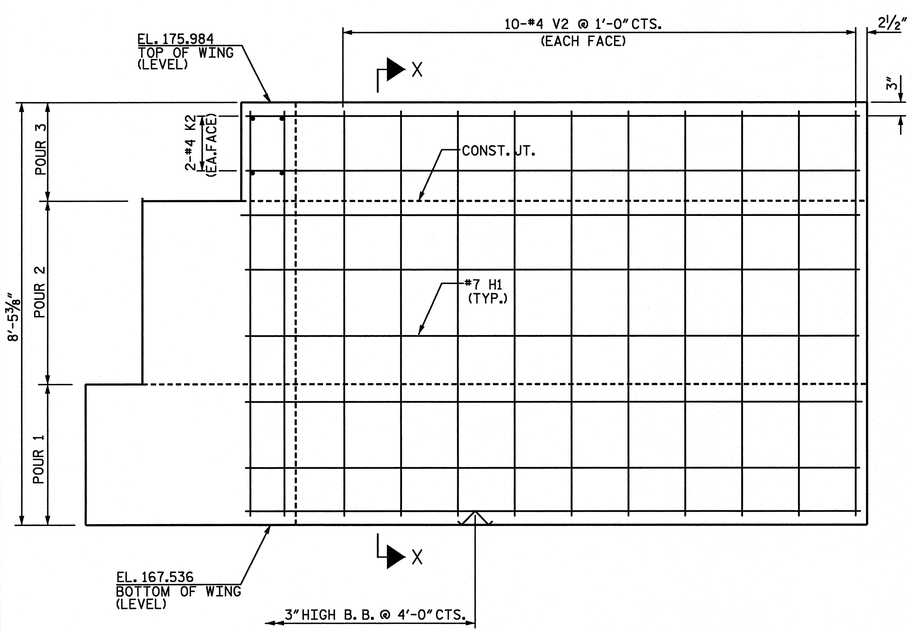

ELEVATION OF WING W1

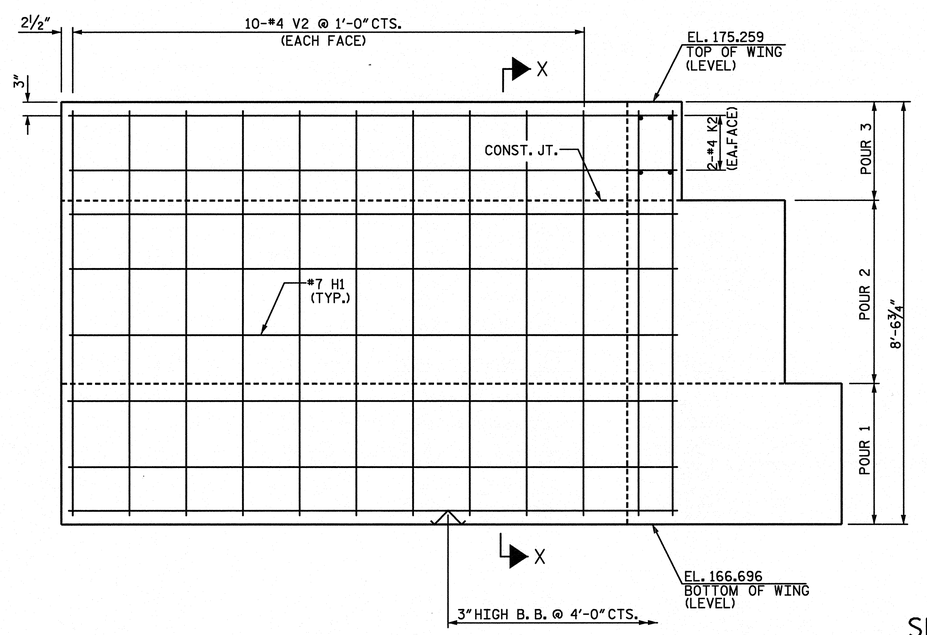

ELEVATION OF WING W2

BAR TYPES

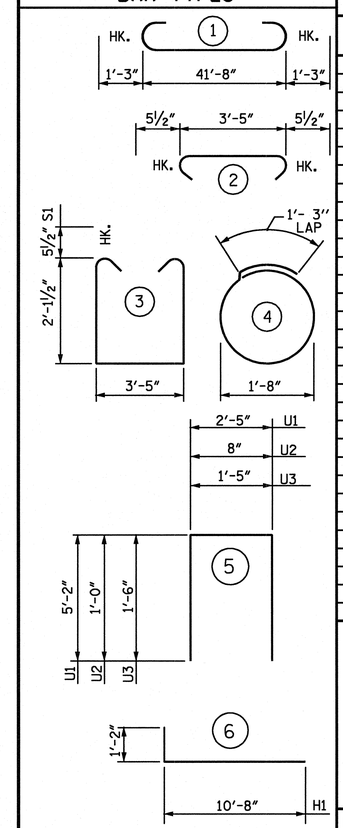

(ALL BAR DIMENSIONS ARE OUT TO OUT.)

BILL OF MATERIAL

END BENT 1

BAR	NO.	SIZE	TYPE	LENGTH	WEIGHT
B1	9	#9	1	44'-2"	1352
B2	8	#5	STR	41'-8"	348
B3	8	#4	STR	22'-1"	118
D1	24	#8	STR	2'-3"	144
H1	32	#7	6	11'-10"	774
K1	4	#5	STR	41'-8"	174
K2	8	#4	STR	2'-6"	13
S1	42	#5	3	8'-7"	376
S2	42	#5	2	4'-4"	190
S3	22	#4	4	6'-6"	96
U1	42	#5	5	12'-9"	559
U2	36	#4	5	2'-8"	64
U3	4	#4	5	4'-5"	12
V1	72	#5	STR	5'-3"	394
V2	56	#4	STR	8'-0"	299

REINFORCING STEEL = 4913 LBS
CLASS A CONCRETE

POUR 1	C.Y.	16.4
POUR 2	C.Y.	15.9
POUR 3	C.Y.	4.7
LATERAL GUIDE	C.Y.	0.1
TOTAL	C.Y.	37.1

HP 12x53 GALVANIZED STEEL PILES
NO. 11 (LIN. FT.) 415

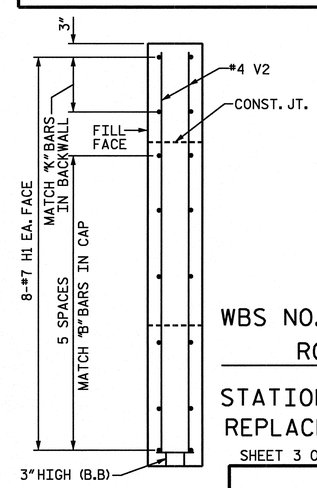

SECTION X-X

WBS NO. 33592.3.1

ROBESON COUNTY

STATION: 10+33.00 -L-

REPLACES BRIDGE NO. 35

SHEET 3 OF 3

STATE OF NORTH CAROLINA
DEPARTMENT OF TRANSPORTATION
RALEIGH

SUBSTRUCTURE
END BENT 1

WETHERILL ENGINEERING
559 Jones Franklin Rd. Suite 164
Raleigh, N.C. 27606
Bus: 919 851 8077
Fax: 919 851 8107
LICENCE NO. F-0377

TRANSPORTATION PLANNING/DESIGN - BRIDGE/STRUCTURE DESIGN
CIVIL/SITE DESIGN - GIS/GPS - CONSTRUCTION OBSERVATION

REVISIONS						SHEET NO.
NO.	BY:	DATE:	NO.	BY:	DATE:	9
1			3			TOTAL SHEETS
2			4			19

DRAWN BY : J.C. PENDERGRAFT DATE : 6/07
CHECKED BY : J. DILWORTH DATE : 6/07

P:\03102\B-4250\BoxBeam\boxbeam Dgn\endbents.dgn
3/22/2012 7:05:20 AM

NOTES:

STIRRUPS IN CAP MAY BE SHIFTED AS NECESSARY TO CLEAR DOWELS.

FOR SECTION A-A SEE END BENT 1, SHEET 2 OF 3.

FOR MISC. DETAILS SEE END BENT 1, SHEET 2 OF 3.

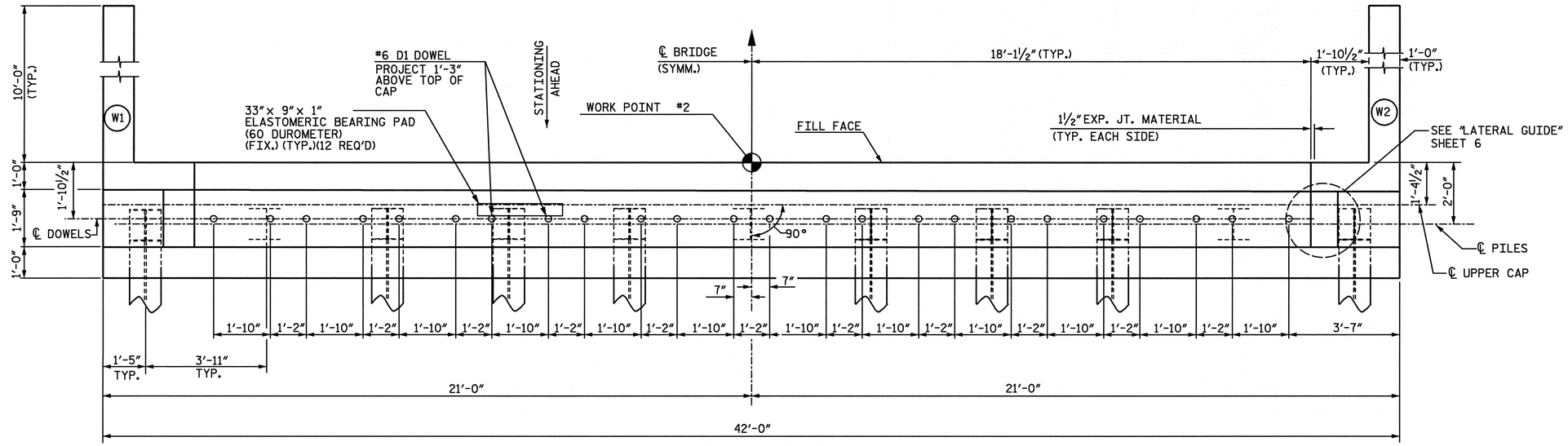

PLAN

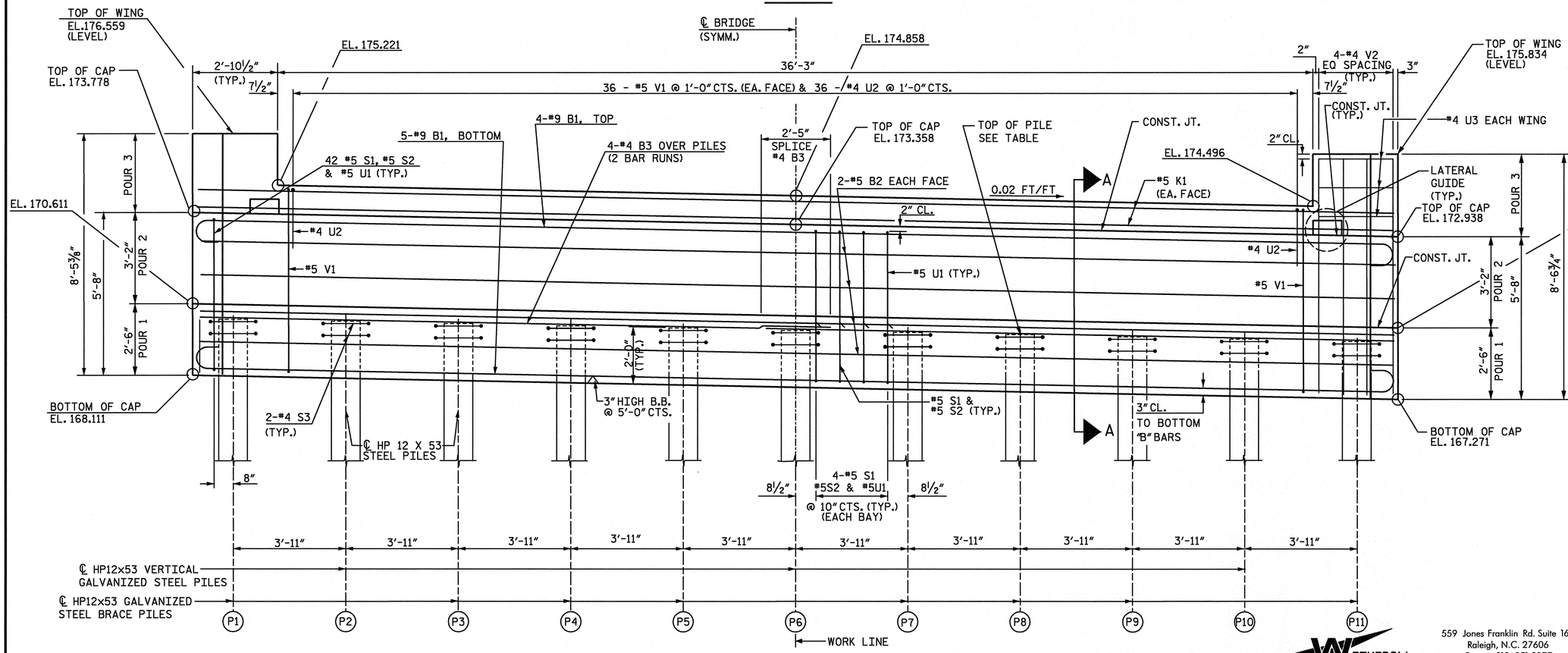

ELEVATION

TOP OF PILE ELEVATION	
PILE LOCATION	ELEVATION
P1	170.083
P2	170.004
P3	169.926
P4	169.847
P5	169.769
P6	169.691
P7	169.612
P8	169.534
P9	169.456
P10	169.377
P11	169.299

NORTH CAROLINA PROFESSIONAL SEAL 22072 ENGINEER JOHN ARTHUR DILWORTH 3-22-12

WBS NO. 33592.3.1

ROBESON COUNTY

STATION: 10+33.00 -L-

REPLACES BRIDGE NO. 35

SHEET 1 OF 2

STATE OF NORTH CAROLINA
DEPARTMENT OF TRANSPORTATION
RALEIGH

SUBSTRUCTURE
END BENT 2

WETHERILL ENGINEERING
559 Jones Franklin Rd. Suite 164
Raleigh, N.C. 27606
Bus: 919 851 8077
Fax: 919 851 8107
LICENCE NO. F-0377

TRANSPORTATION PLANNING/DESIGN - BRIDGE/STRUCTURE DESIGN
CIVIL/SITE DESIGN - GIS/GPS - CONSTRUCTION OBSERVATION

REVISIONS								SHEET NO.
NO.	BY:	DATE:	NO.	BY:	DATE:			10
1			3					TOTAL SHEETS
2			4					19

DRAWN BY : J.C. PENDERGRAFT DATE : 6/07
CHECKED BY : J. DILWORTH DATE : 6/07

P:\03102\G-4250\BoxBeam\boxbeam Dgn\endbent2.dgn
3/22/2012 7:08:11 AM

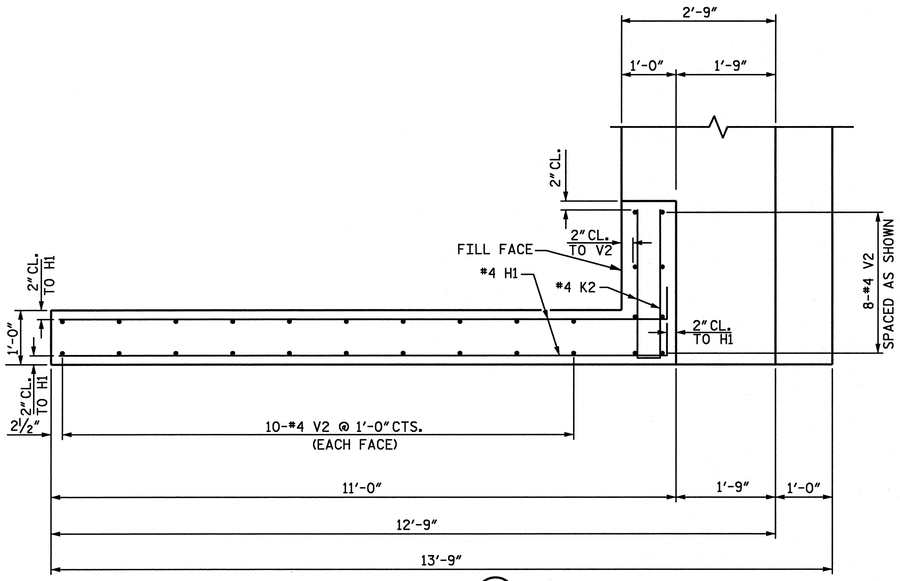

PLAN OF WING (W1)

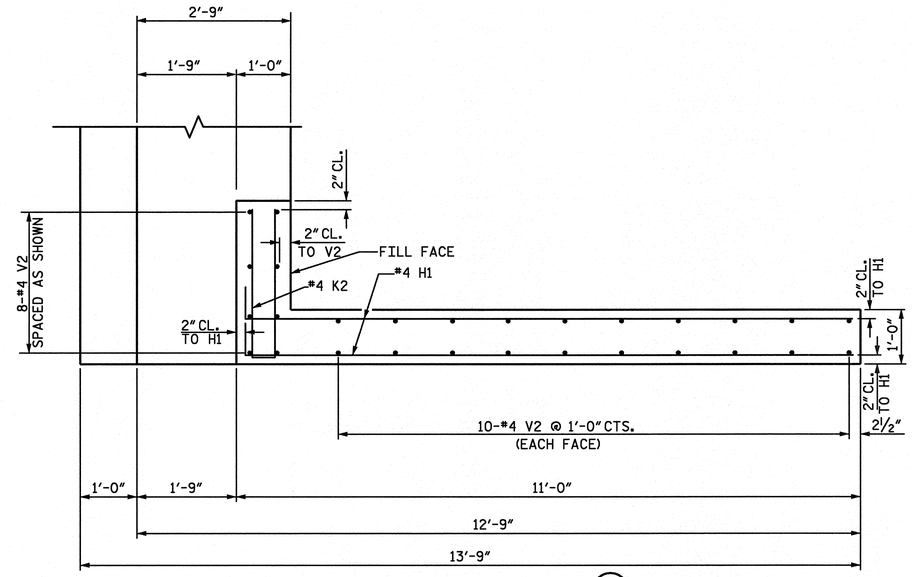

PLAN OF WING (W2)

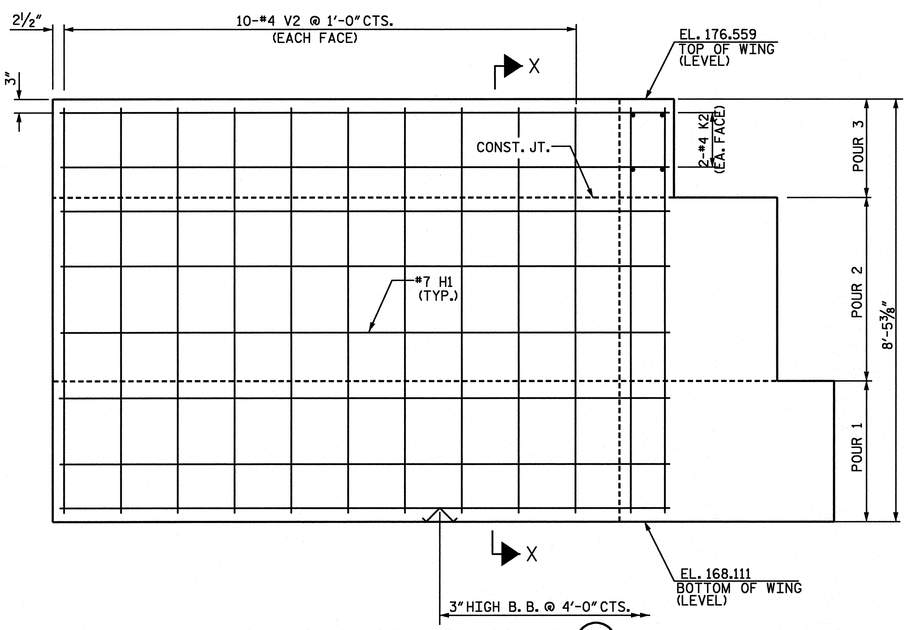

ELEVATION OF WING (W1)

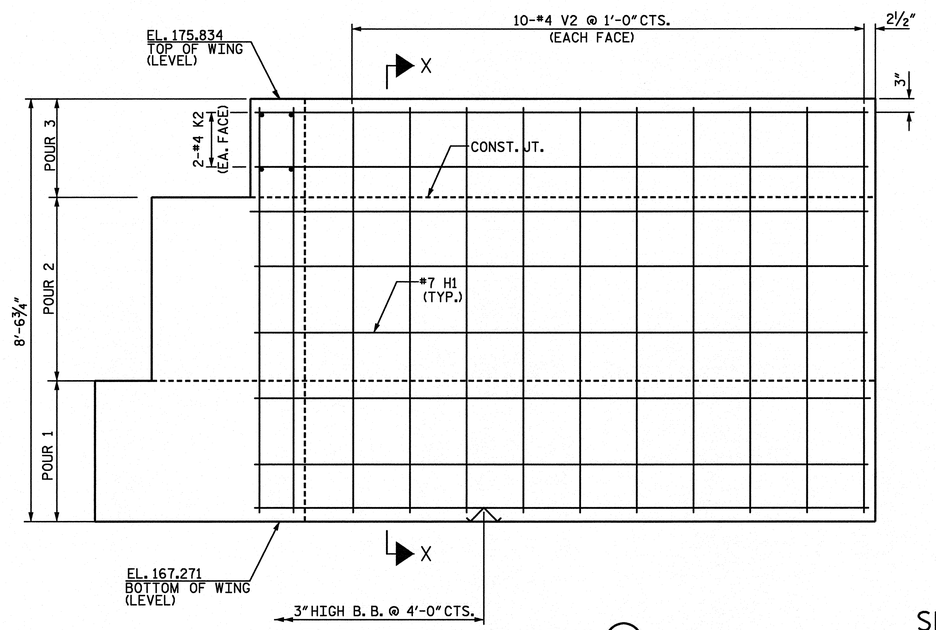

ELEVATION OF WING (W2)

BAR TYPES

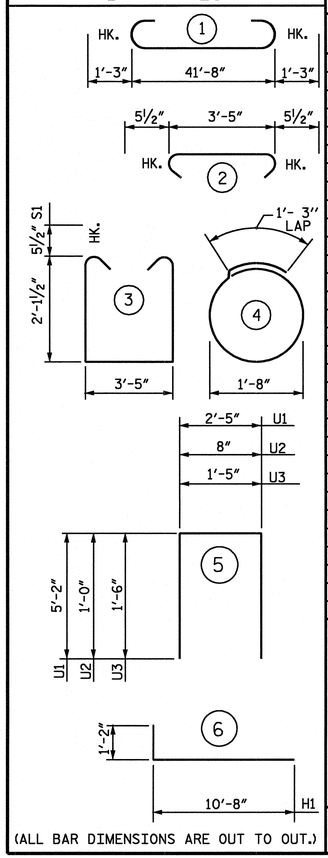

(ALL BAR DIMENSIONS ARE OUT TO OUT.)

BILL OF MATERIAL

END BENT 2

BAR	NO.	SIZE	TYPE	LENGTH	WEIGHT
B1	9	#9	1	44'-2"	1352
B2	8	#5	STR	41'-8"	348
B3	8	#4	STR	22'-1"	118
D1	24	#8	STR	2'-3"	144
H1	32	#7	6	11'-10"	774
K1	4	#5	STR	41'-8"	174
K2	8	#4	STR	2'-6"	13
S1	42	#5	3	8'-7"	376
S2	42	#5	2	4'-4"	190
S3	22	#4	4	6'-6"	96
U1	42	#5	5	12'-9"	559
U2	36	#4	5	2'-8"	64
U3	4	#4	5	4'-5"	12
V1	72	#5	STR	5'-3"	394
V2	56	#4	STR	8'-0"	299

REINFORCING STEEL = 4913 LBS

CLASS A CONCRETE

POUR 1	C.Y.	16.4
POUR 2	C.Y.	15.9
POUR 3	C.Y.	4.7
LATERAL GUIDE	C.Y.	0.1
TOTAL	C.Y.	37.1

HP 12x53 GALVANIZED STEEL PILES

NO. 11 (LIN. FT.) 415

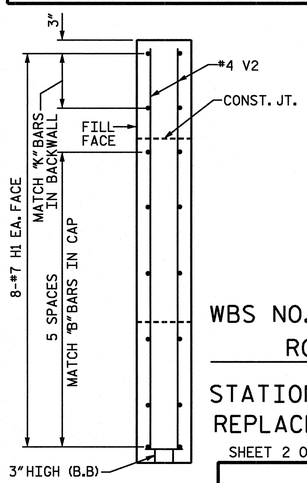

SECTION X-X

WBS NO. 33592.3.1

ROBESON COUNTY

STATION: 10+33.00 -L-

REPLACES BRIDGE NO. 35

SHEET 2 OF 2

STATE OF NORTH CAROLINA
DEPARTMENT OF TRANSPORTATION
RALEIGH

SUBSTRUCTURE
END BENT 2

WETHERILL ENGINEERING
559 Jones Franklin Rd. Suite 164
Raleigh, N.C. 27606
Bus: 919 851 8077
Fax: 919 851 8107
LICENCE NO. F-0377

TRANSPORTATION PLANNING/DESIGN - BRIDGE/STRUCTURE DESIGN
CIVIL/SITE DESIGN - GIS/GPS - CONSTRUCTION OBSERVATION

REVISIONS						SHEET NO.
NO.	BY:	DATE:	NO.	BY:	DATE:	11
1			3			TOTAL SHEETS
2			4			19

DRAWN BY : J.C. PENDERGRAFT DATE : 6/07
CHECKED BY : J. DILWORTH DATE : 6/07

P:\03102\G-4250\BoxBeam\boxbeam Dgn\endbent2.dgn
3/22/2012 7:08:22 AM

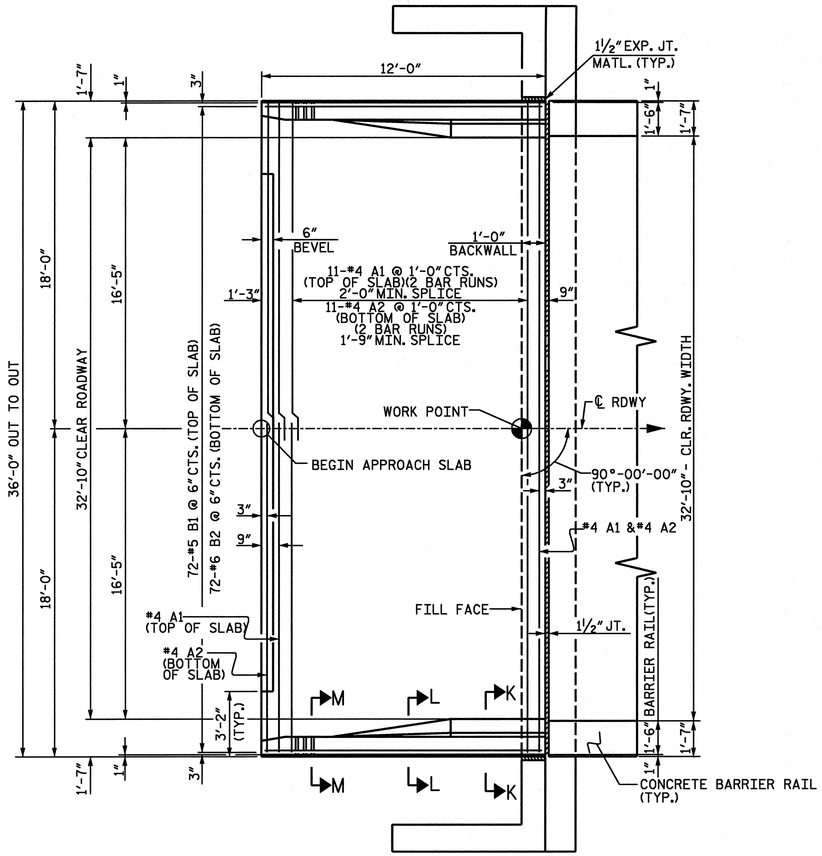

PLAN OF APPROACH SLAB @ END BENT 1

(END BENT 2 SIMILAR)

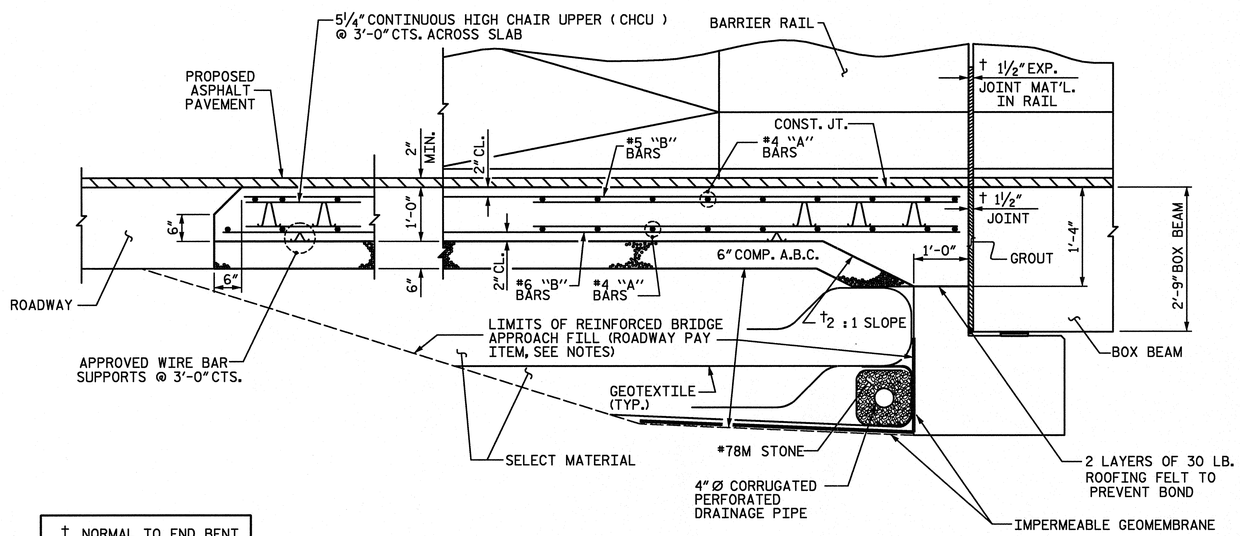

† NORMAL TO END BENT

SECTION THRU SLAB

NOTES:

FOR REINFORCED BRIDGE APPROACH FILL INCLUDING FABRIC, IMPERMEABLE GEOMEMBRANE, 4"Ø DRAINAGE PIPE, #78M STONE, AND SELECT MATERIAL, SEE ROADWAY STANDARD 422.10.

AREA BETWEEN THE WINGWALL AND APPROACH SLAB SHALL BE GRADED TO DRAIN THE WATER AWAY FROM THE FILL FACE OF THE BRIDGE AND SHALL BE PAVED WITH 4" OF INTERMEDIATE OR SURFACE COURSE ASPHALT.

THE 6" COMP. A.B.C. SHALL EXTEND 10'-0" BEYOND THE END OF THE APPROACH SLAB AND 1'-0" OUTSIDE OF EACH EDGE OF SLAB.

THE CONTRACTOR MAY USE 4" TYPE B25.0B ASPHALT CONCRETE BASE COURSE IN LIEU OF 6" COMP. A.B.C. IF THIS OPTION IS USED, THE BASE COURSE SHALL EXTEND 1'-0" BEYOND THE END OF THE APPROACH SLAB AND THE WIDTH SHALL BE THE SAME AS THAT OF THE APPROACH SLAB.

THE CONTRACTOR MAY USE 5" CLASS "A" CONCRETE BASE IN LIEU OF 6" COMP. A.B.C. IF THIS OPTION IS USED, THE CONCRETE BASE SHALL EXTEND 1'-0" BEYOND THE END OF THE APPROACH SLAB AND THE WIDTH SHALL BE THE SAME AS THAT OF THE APPROACH SLAB. THE CONCRETE SHALL BE FINISHED TO A SMOOTH SURFACE AND A LAYER OF 30 LB. ROOFING FELT SHALL BE PLACED BETWEEN THE CONCRETE BASE AN THE APPROACH SLAB TO PREVENT BOND. THE APPROACH SLAB SHALL NOT BE CAST UNTIL THE CONCRETE BASE HASE REACHED AN AGE OF THREE CURING DAYS.

TEMPORARY DRAINAGE AND TEMPORARY BERM AND SLOPE DRAINS WILL BE PAID FOR UNDER THE LUMP SUM PRICE FOR APPROACH SLABS, SEE ROADWAY STANDARD 1622.01.

FOR JOINT DETAILS, SEE SHEET NO. 3.

THE JOINT AT THE END BENT SHALL BE GROUTED AS SOON AS PRACTICAL AFTER THE CONSTRUCTION OF THE APPROACH SLABS.

APPROACH SLAB GROOVING IS NOT REQUIRED.

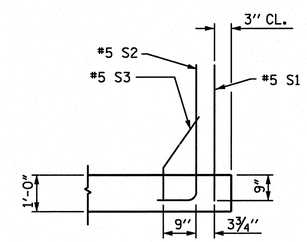

SECTION K-K

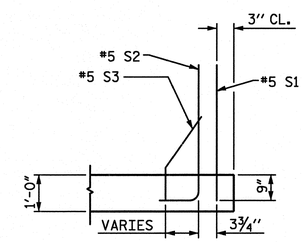

SECTION L-L

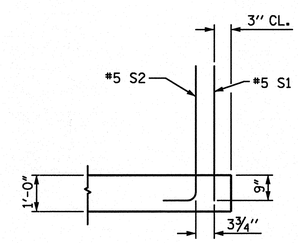

SECTION M-M

BILL OF MATERIAL

FOR ONE APPROACH SLAB (2 REQ'D)

BAR	NO.	SIZE	TYPE	LENGTH	WEIGHT
✳ A1	26	#4	STR	18'-10"	327
A2	26	#4	STR	18'-9"	326
✳ B1	72	#5	STR	11'-3"	844
B2	72	#6	STR	11'-8"	1262
✳ B3	2	#5	3	6'-5"	13
✳ B4	14	#5	STR	11'-8"	170
✳ S1	48	#5	STR	3'-5"	171
✳ S2	48	#5	1	4'-3"	213
✳ S3	20	#5	2	2'-5"	50

REINFORCING STEEL	LBS.	1588
✳ EPOXY COATED REINFORCING STEEL	LBS.	1788

CLASS AA CONCRETE BREAKDOWN

POUR 1 SLAB	C. Y.	16.5
POUR 2 RAIL	C. Y.	2.3
CLASS AA CONCRETE	C. Y.	18.8

BAR TYPES

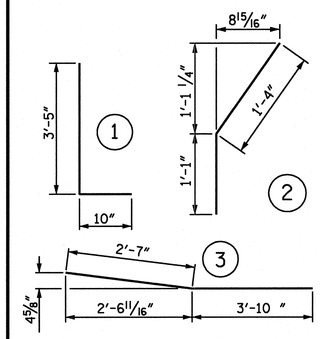

(ALL BAR DIMENSIONS ARE OUT TO OUT.)

NORTH CAROLINA PROFESSIONAL SEAL 22072 ENGINEER JOHN ARTHUR DILWORTH 3-28-12

WBS NO. 33592.3.1

ROBESON COUNTY

STATION: 10+33.00 -L-

REPLACES BRIDGE NO. 35

SHEET 1 OF 2

STATE OF NORTH CAROLINA
DEPARTMENT OF TRANSPORTATION
RALEIGH

BRIDGE APPROACH SLAB FOR PRESTRESSED CONCRETE BOX BEAM WITH BARRIER RAIL

WETHERILL ENGINEERING
559 Jones Franklin Rd. Suite 164
Raleigh, N.C. 27606
Bus: 919 851 8077
Fax: 919 851 8107
LICENCE NO. F-0377

TRANSPORTATION PLANNING/DESIGN - BRIDGE/STRUCTURE DESIGN
CIVIL/SITE DESIGN - GIS/GPS - CONSTRUCTION OBSERVATION

REVISIONS						SHEET NO.
NO.	BY:	DATE:	NO.	BY:	DATE:	12
1			3			TOTAL SHEETS
2			4			19

DRAWN BY : J.C. PENDERGRAFT DATE : 6/07
CHECKED BY : J. DILWORTH DATE : 6/07

P:\03102\B-4250\BoxBeam\boxbeam Dgn\approach.dgn
3/28/2012 7:54:29 AM

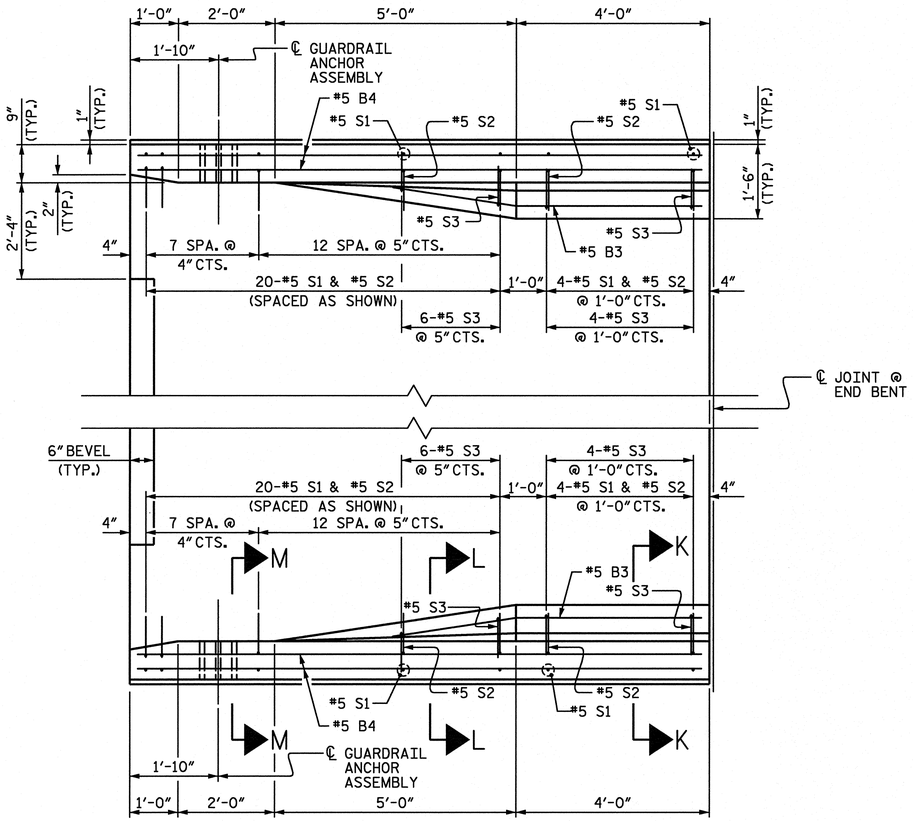

PLAN

BEGIN APPROACH SLAB SHOWN, END APPROACH SLAB SIMILAR

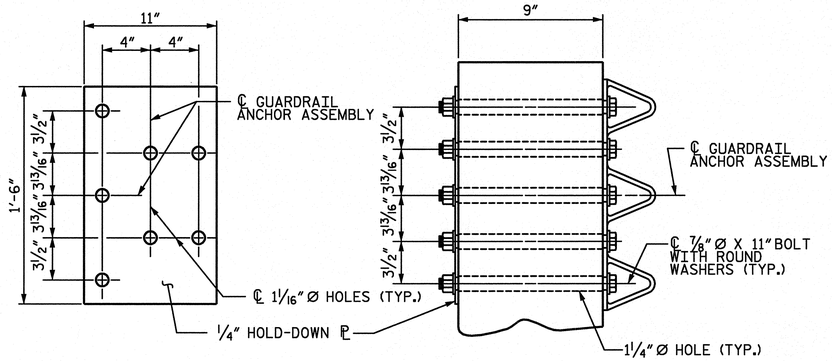

PLAN

SECTION E-E

GUARDRAIL ANCHOR ASSEMBLY DETAILS

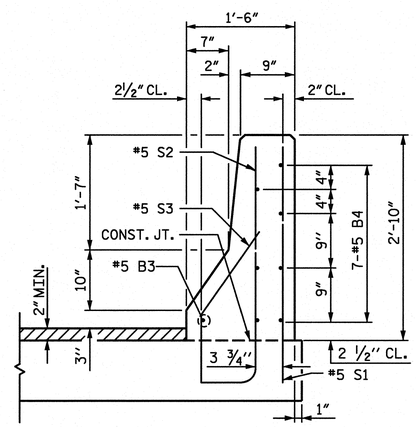

SECTION K-K

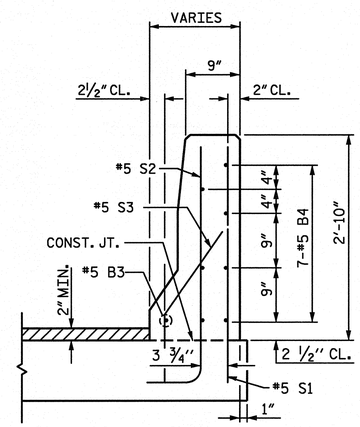

SECTION L-L

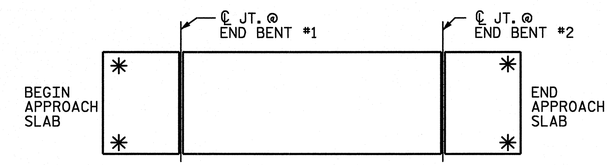

SKETCH SHOWING POINTS OF ATTACHMENT

✱ INDICATES POINTS OF ATTACHMENT

NOTES:

THE GUARDRAIL ANCHOR ASSEMBLY SHALL CONSIST OF A 1/4" HOLD DOWN PLATE AND 7 - 7/8" Ø BOLTS WITH NUTS AND WASHERS.

THE HOLD-DOWN PLATE SHALL CONFORM TO AASHTO M270 GRADE 36. AFTER FABRICATION, THE HOLD-DOWN PLATE SHALL BE HOT-DIP GALVANIZED IN ACCORDANCE WITH AASHTO M111.

BOLTS SHALL CONFORM TO THE REQUIREMENTS OF ASTM A307 AND NUTS SHALL CONFORM TO THE REQUIREMENTS OF AASHTO M291. BOLTS, NUTS AND WASHERS SHALL BE GALVANIZED. AT THE CONTRACTOR'S OPTION, STAINLESS STEEL BOLTS, NUTS AND WASHERS MAY BE USED AS AN ALTERNATE FOR THE 7/8" Ø GALVANIZED BOLTS, NUTS AND WASHERS. THEY SHALL CONFORM TO OR EXCEED THE MECHANICAL REQUIREMENTS OF ASTM A307. THE USE OF THIS ALTERNATE SHALL BE APPROVED BY THE ENGINEER.

AFTER INSTALLATION, THE EXPOSED THREAD OF THE BOLT SHALL BE BURRED WITH A SHARP POINTED TOOL.

THE COST OF THE GUARDRAIL ANCHOR ASSEMBLIES WITH BOLTS, NUTS AND WASHERS COMPLETE IN PLACE, SHALL BE INCLUDED IN THE LUMP SUM CONTRACT PRICE BID FOR BRIDGE APPROACH SLABS.

THE 1 1/4" Ø HOLES SHALL BE FORMED OR DRILLED WITH A CORE BIT. IMPACT TOOLS WILL NOT BE PERMITTED. ANY CONCRETE DAMAGED BY THIS WORK SHALL BE REPAIRED TO THE SATISFACTION OF THE ENGINEER.

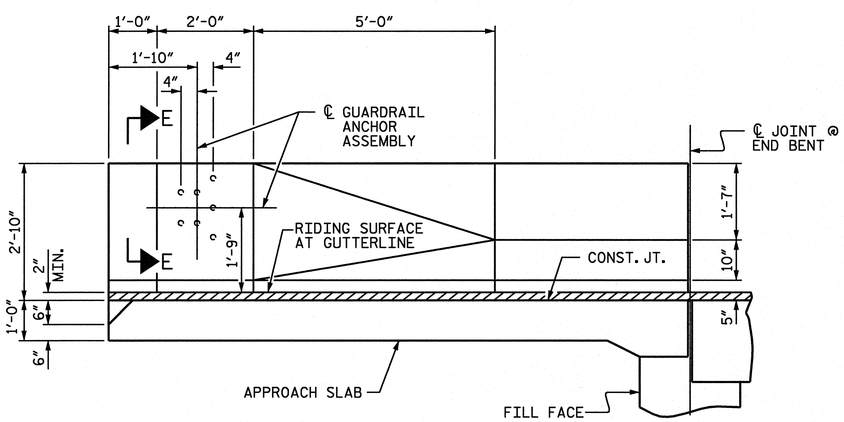

ELEVATION

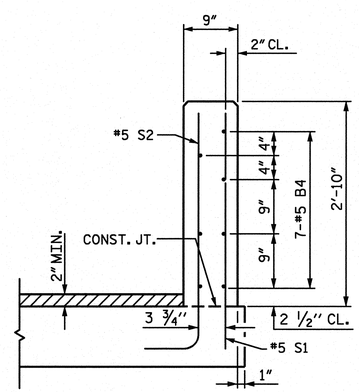

SECTION M-M

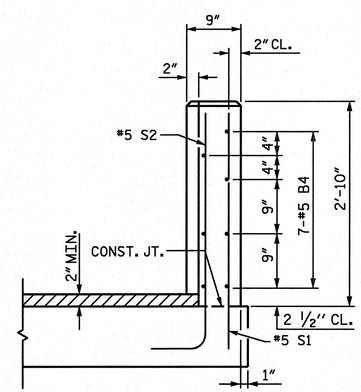

END VIEW

NORTH CAROLINA PROFESSIONAL SEAL 22072 ENGINEER JOHN ARTHUR DILWORTH 3-22-12

WBS NO. 33592.3.1

ROBESON COUNTY

STATION: 10+33.00 -L-

REPLACES BRIDGE NO. 35

SHEET 2 OF 2

STATE OF NORTH CAROLINA
DEPARTMENT OF TRANSPORTATION
RALEIGH

STANDARD

BRIDGE APPROACH SLAB DETAILS FOR PRESTRESSED CONCRETE BOX BEAM WITH BARRIER RAIL

WETHERILL ENGINEERING
559 Jones Franklin Rd. Suite 164
Raleigh, N.C. 27606
Bus: 919 851 8077
Fax: 919 851 8107
LICENCE NO. F-0377

TRANSPORTATION PLANNING/DESIGN - BRIDGE/STRUCTURE DESIGN
CIVIL/SITE DESIGN - GIS/GPS - CONSTRUCTION OBSERVATION

REVISIONS						SHEET NO.
NO.	BY:	DATE:	NO.	BY:	DATE:	13
1			3			TOTAL SHEETS
2			4			19

DRAWN BY : J.C. PENDERGRAFT DATE : 6/07
CHECKED BY : J. DILWORTH DATE : 6/07

P:\03102\B-4250\BoxBeam\boxbeam Dgn\approach.dgn
3/22/2012 7:09:21 AM

EROSION CONTROL PLAN

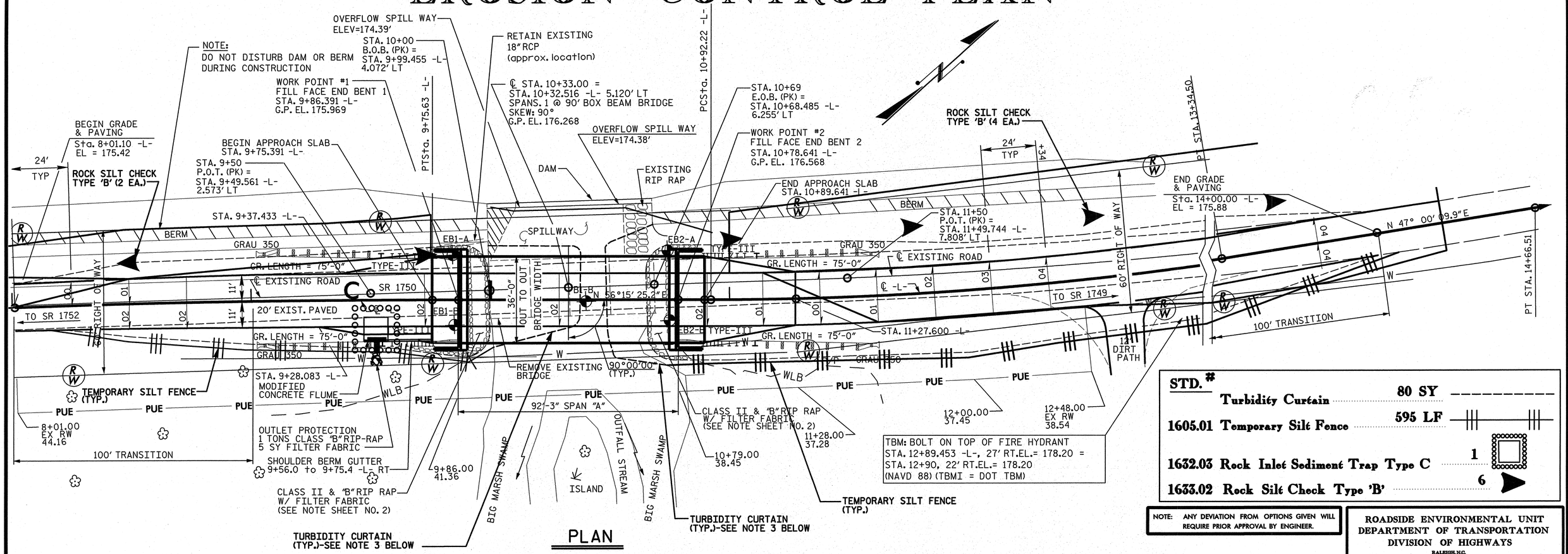

PLAN

STD. #		
	Turbidity Curtain	80 SY
1605.01	Temporary Silt Fence	595 LF
1632.03	Rock Inlet Sediment Trap Type C	1
1633.02	Rock Silt Check Type 'B'	6

NOTE: ANY DEVIATION FROM OPTIONS GIVEN WILL REQUIRE PRIOR APPROVAL BY ENGINEER.

ROADSIDE ENVIRONMENTAL UNIT
DEPARTMENT OF TRANSPORTATION
DIVISION OF HIGHWAYS
RALEIGH, N.C.

2006 STANDARD SPECIFICATIONS

STATE OF NORTH CAROLINA DEPT. OF TRANSPORTATION DIVISION OF HIGHWAYS RALEIGH, N.C. — 7-06

ENGLISH STANDARD DRAWING FOR ROCK INLET SEDIMENT TRAP TYPE 'C'

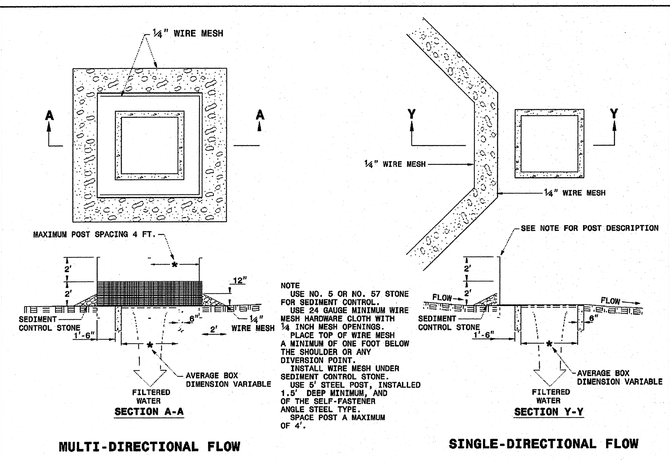

NOTE
USE NO. 5 OR NO. 57 STONE FOR SEDIMENT CONTROL.
USE 24 GAUGE MINIMUM WIRE MESH HARDWARE CLOTH WITH ¼ INCH MESH OPENINGS.
PLACE TOP OF WIRE MESH A MINIMUM OF ONE FOOT BELOW THE SHOULDER OR ANY DIVERSION POINT.
INSTALL WIRE MESH UNDER SEDIMENT CONTROL STONE.
USE 5' STEEL POST, INSTALLED 1.5' DEEP MINIMUM, AND OF THE SELF-FASTENER ANGLE STEEL TYPE.
SPACE POST A MAXIMUM OF 4'.

SHEET 1 OF 1 — 1632.03

STATE OF NORTH CAROLINA DEPT. OF TRANSPORTATION DIVISION OF HIGHWAYS RALEIGH, N.C. — 7-06

ENGLISH STANDARD DRAWING FOR TEMPORARY ROCK SILT CHECK TYPE 'B'

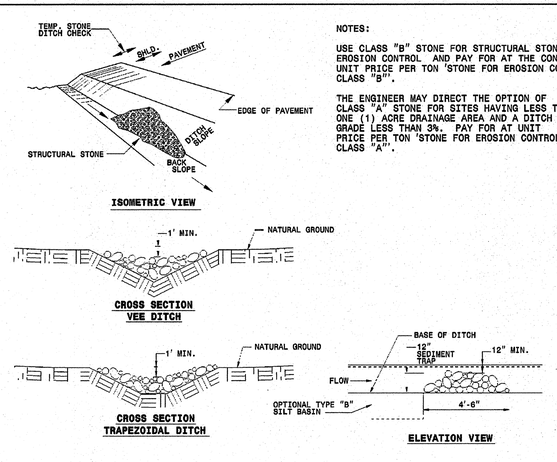

NOTES:

USE CLASS "B" STONE FOR STRUCTURAL STONE FOR EROSION CONTROL AND PAY FOR AT THE CONTRACT UNIT PRICE PER TON 'STONE FOR EROSION CONTROL CLASS "B".

THE ENGINEER MAY DIRECT THE OPTION OF CLASS "A" STONE FOR SITES HAVING LESS THAN ONE (1) ACRE DRAINAGE AREA AND A DITCH GRADE LESS THAN 3%. PAY FOR AT UNIT PRICE PER TON 'STONE FOR EROSION CONTROL CLASS "A".

SHEET 1 OF 1 — 1633.02

STATE OF NORTH CAROLINA DEPT. OF TRANSPORTATION DIVISION OF HIGHWAYS RALEIGH, N.C. — 1-02

ENGLISH STANDARD DRAWING FOR TEMPORARY ROCK SILT CHECK TYPE 'B'

EROSION CONTROL SEQUENCE

1. ACCESS AND MOBILIZATION: STABILIZE BARE AREAS IMMEDIATELY WITH TEMPORARY VEGETATION AND/OR GRAVEL AS CONSTRUCTION TAKES PLACE.
2. INSTALL SILT FENCE. SILT FENCE SHALL BE INSTALLED AT THE TOE OF THE FILL SLOPE TO PREVENT SEDIMENT-LADEN RUNOFF FROM LEAVING THE CONSTRUCTION SITE AND/OR ENTERING BIG MARSH SWAMP.
3. INSTALL TURBIDITY CURTAIN ON THE END OF THE BRIDGE WHERE CONSTRUCTION IS TO BEGIN. TURBIDITY CURTAIN SHALL BE INSTALLED BELOW THE EXISTING BRIDGE ABUTMENTS AND PIERS TO PREVENT SEDIMENT-LADEN RUNOFF FROM LEAVING THE CONSTRUCTION SITE AND/OR ENTERING BIG MARSH SWAMP. TURBIDITY CURTAIN SHALL BE REUSED AND RESET FOR CONSTRUCTION
4. PROCEED WITH CONSTRUCTION OF THE NEW BRIDGE. ADDITIONAL GRAVEL STABILIZATION OR SILT FENCE MAY BE REQUIRED BEHIND THE OLD ABUTMENTS WHEN THE OLD BRIDGE IS REMOVED AND BEFORE THE NEW BRIDGE IS INSTALLED.
5. MAINTENANCE INSPECTIONS SHALL BE PERFORMED WEEKLY AND AFTER PERIODS OF RAINFALL. REPAIRS SHALL BE MADE IMMEDIATELY.
6. ONCE THE SITE IS STABILIZED, REMOVE ALL EROSION CONTROL DEVICES..

NORTH CAROLINA PROFESSIONAL SEAL 033795 ENGINEER SHANNON R. WEAVER 11-22-11

WBS NO. 33592.3.1

ROBESON COUNTY

STATION: 10+33.00 -L-

REPLACES BRIDGE NO. 35

STATE OF NORTH CAROLINA
DEPARTMENT OF TRANSPORTATION
RALEIGH

BRG. #35 ON SR1750
OVER BIG MARSH SWAMP

WETHERILL ENGINEERING
559 Jones Franklin Rd. Suite 164
Raleigh, N.C. 27606
Bus: 919 851 8077
Fax: 919 851 8107
LICENCE NO. F-0377

TRANSPORTATION PLANNING/DESIGN - BRIDGE/STRUCTURE DESIGN
CIVIL/SITE DESIGN - GIS/GPS - CONSTRUCTION OBSERVATION

REVISIONS						SHEET NO.
NO.	BY:	DATE:	NO.	BY:	DATE:	14
1			3			TOTAL SHEETS
2			4			19

DRAWN BY : J.C. PENDERGRAFT DATE : 8/11
CHECKED BY : J. DILWORTH DATE : 8/11

P:\03102\B-4250\BoxBeam\boxbeam Dgn\erosionV8_112111.dgn
11/22/2011 10:25:04 AM

PROJ. REFERENCE NO.	SHEET NO.	TOTAL SHEETS
B-4250	X-1	

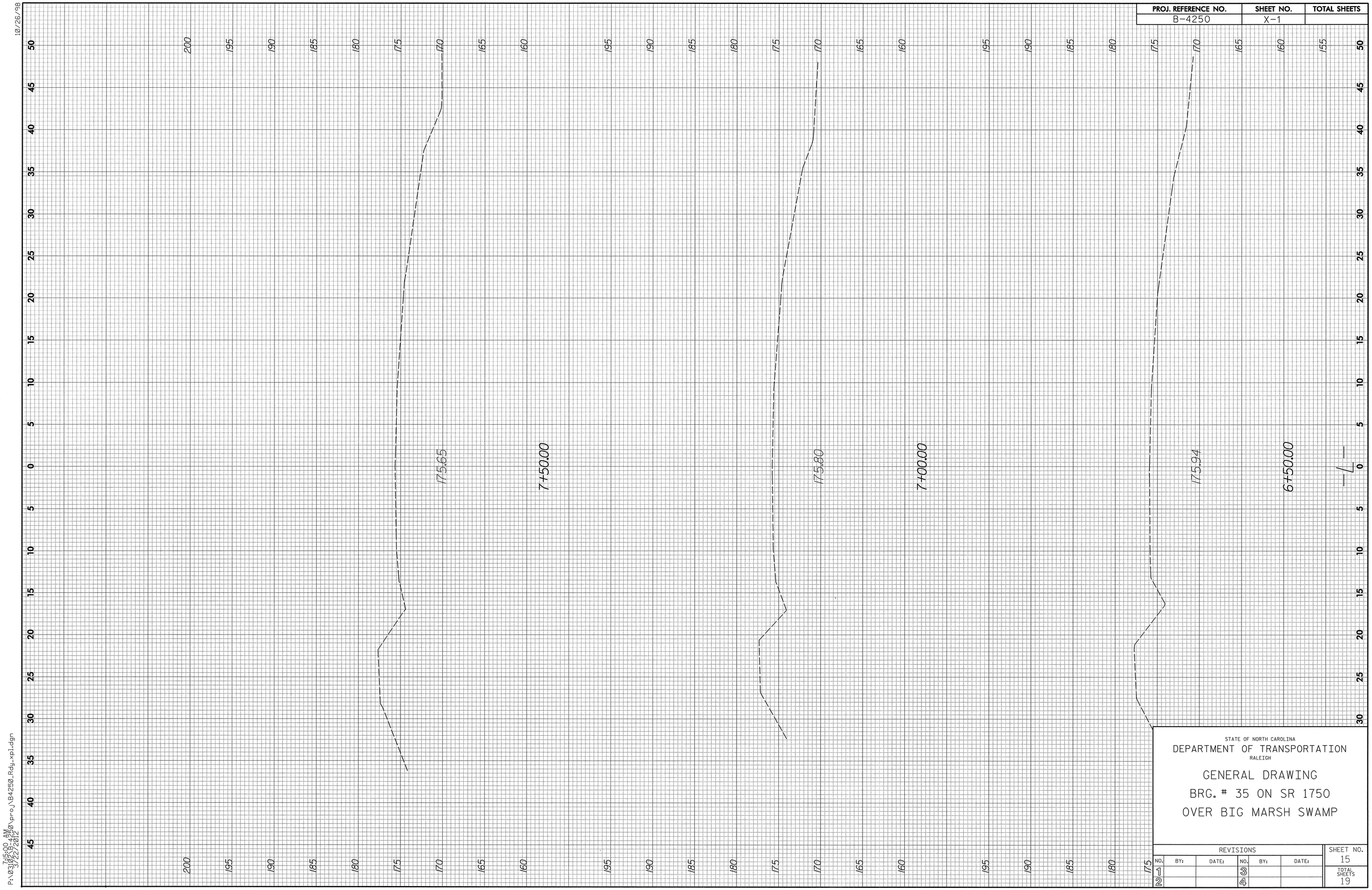

STATE OF NORTH CAROLINA
DEPARTMENT OF TRANSPORTATION
RALEIGH

GENERAL DRAWING
BRG. # 35 ON SR 1750
OVER BIG MARSH SWAMP

REVISIONS						SHEET NO.
NO.	BY:	DATE:	NO.	BY:	DATE:	15
1			3			TOTAL SHEETS
2			4			19

10/26/98

P:\03452\B4250\proj\B4250_Rdy_xpl.dgn 7:15:00 AM 3/22/2012

PROJ. REFERENCE NO.	SHEET NO.	TOTAL SHEETS
B-4250	X-2	

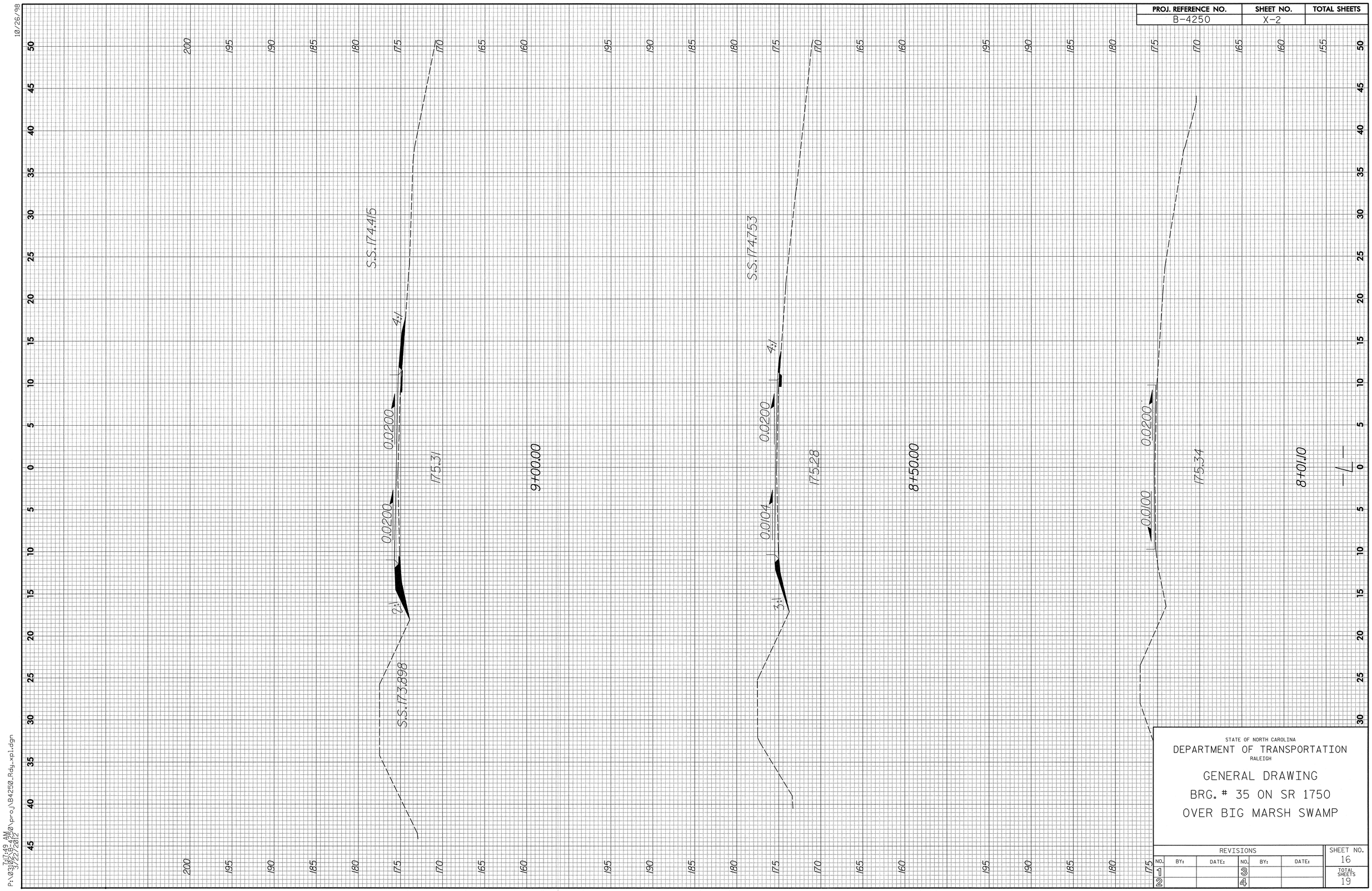

STATE OF NORTH CAROLINA
DEPARTMENT OF TRANSPORTATION
RALEIGH

GENERAL DRAWING
BRG. # 35 ON SR 1750
OVER BIG MARSH SWAMP

REVISIONS						SHEET NO.
NO.	BY:	DATE:	NO.	BY:	DATE:	16
1			3			TOTAL SHEETS
2			4			19

10/26/98

P:\03192\proj\B4250\Rdy_xpl.dgn
10:49 AM
3/22/2012

PROJ. REFERENCE NO.	SHEET NO.	TOTAL SHEETS
B-4250	X-3	

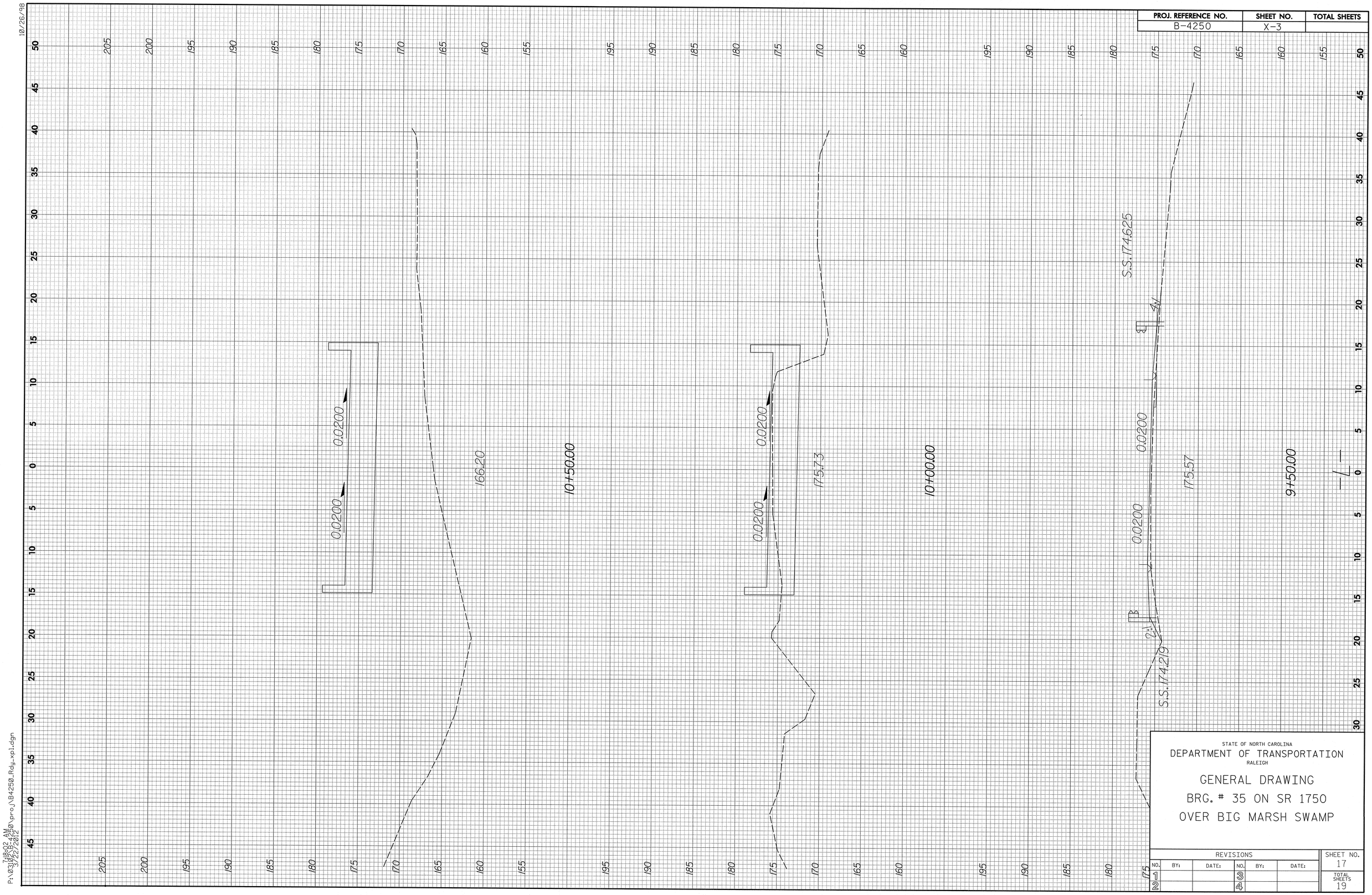

STATE OF NORTH CAROLINA
DEPARTMENT OF TRANSPORTATION
RALEIGH

GENERAL DRAWING
BRG. # 35 ON SR 1750
OVER BIG MARSH SWAMP

REVISIONS						SHEET NO.
NO.	BY:	DATE:	NO.	BY:	DATE:	17
1			3			TOTAL SHEETS
2			4			19

10/26/98

P:\03108\B4250\proj\B4250_Rdy_xpl.dgn
7:18:02 AM
3/22/2012

PROJ. REFERENCE NO.	SHEET NO.	TOTAL SHEETS
B-4250	X-4	

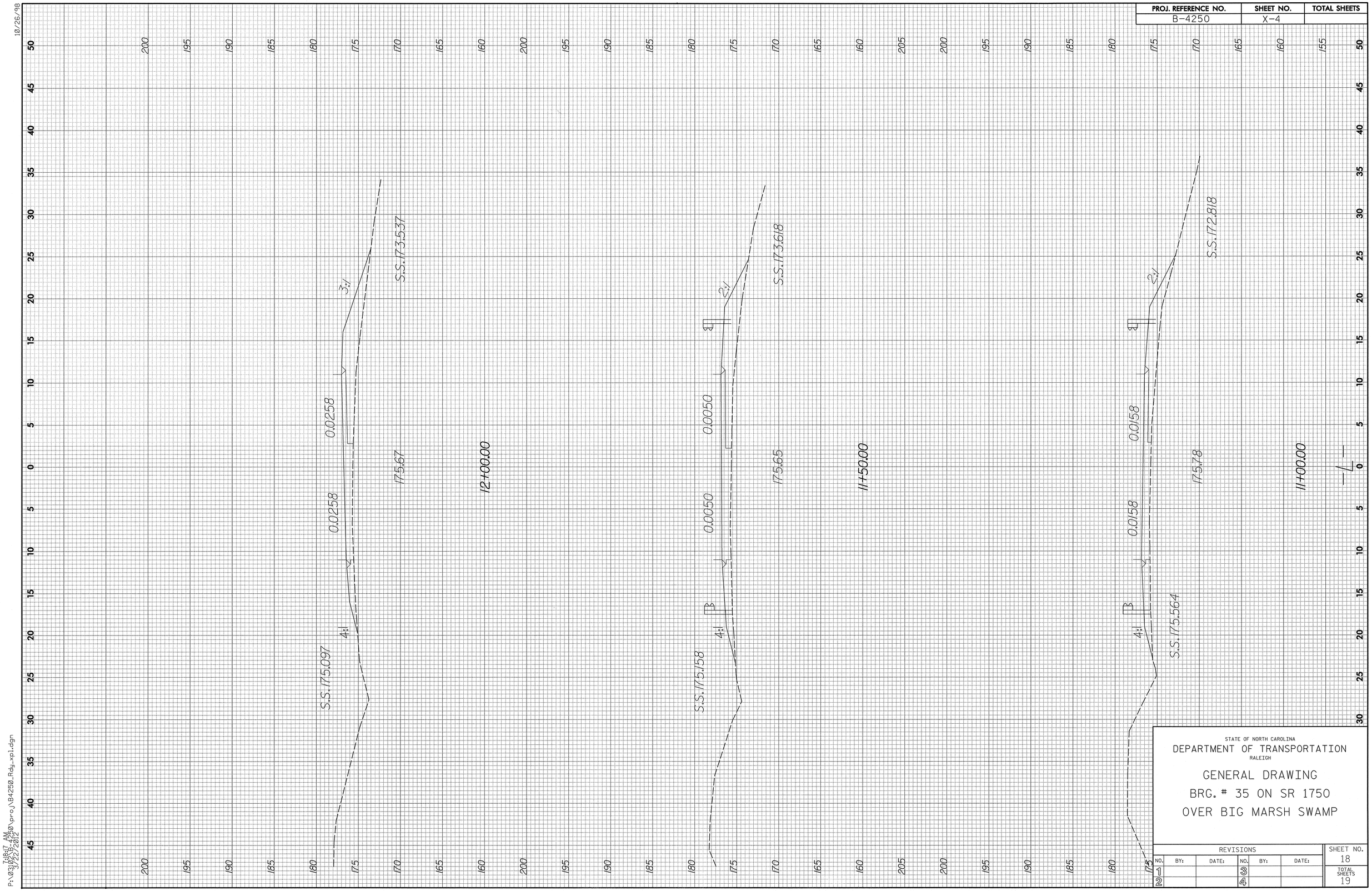

STATE OF NORTH CAROLINA
DEPARTMENT OF TRANSPORTATION
RALEIGH

GENERAL DRAWING
BRG. # 35 ON SR 1750
OVER BIG MARSH SWAMP

REVISIONS						SHEET NO.
NO.	BY:	DATE:	NO.	BY:	DATE:	18
1			3			TOTAL SHEETS
2			4			19

P:\03_Proj\B4250\proj\B4250_Rdy_xpl.dgn
3/22/2012 7:18:17 AM
10/26/98

PROJ. REFERENCE NO.	SHEET NO.	TOTAL SHEETS
B-4250	X-5	

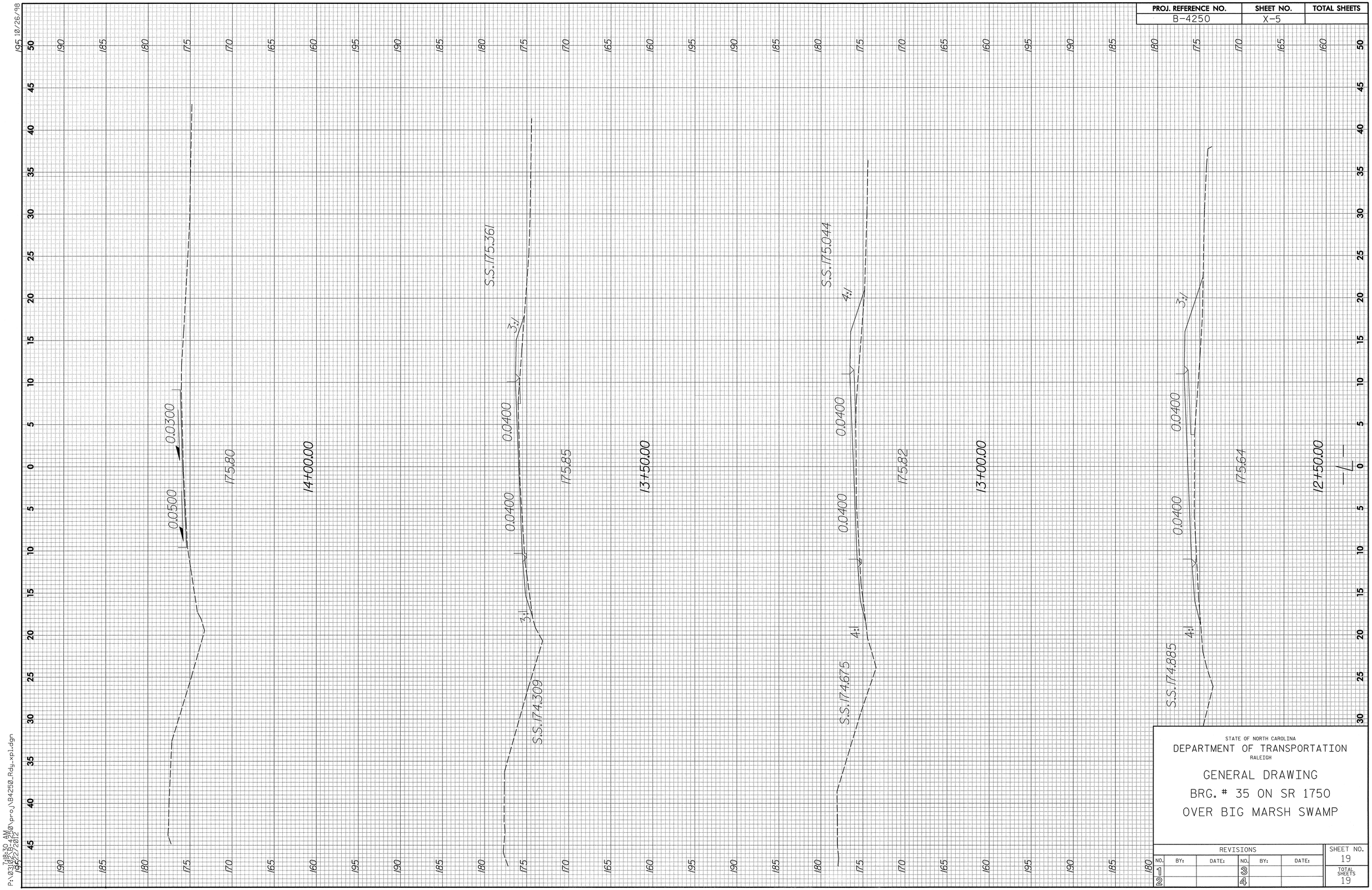

STATE OF NORTH CAROLINA
DEPARTMENT OF TRANSPORTATION
RALEIGH

GENERAL DRAWING
BRG. # 35 ON SR 1750
OVER BIG MARSH SWAMP

REVISIONS						SHEET NO.
NO.	BY:	DATE:	NO.	BY:	DATE:	19
1			3			TOTAL SHEETS
2			4			19

10/26/98

P:\03\B4250\proj\B4250_Rdy_xpl.dgn
10:30 AM
10/22/2012

STANDARD NOTES

DESIGN DATA:

SPECIFICATIONS	A.A.S.H.T.O. (CURRENT)
LIVE LOAD	SEE PLANS
IMPACT ALLOWANCE	SEE A.A.S.H.T.O.
STRESS IN EXTREME FIBER OF	
STRUCTURAL STEEL - AASHTO M270 GRADE 36	20,000 LBS. PER SQ. IN.
- AASHTO M270 GRADE 50W	27,000 LBS. PER SQ. IN.
- AASHTO M270 GRADE 50	27,000 LBS. PER SQ. IN.
REINFORCING STEEL IN TENSION	
GRADE 60	24,000 LBS. PER SQ. IN.
CONCRETE IN COMPRESSION	1,200 LBS. PER SQ. IN.
CONCRETE IN SHEAR	SEE A.A.S.H.T.O.
STRUCTURAL TIMBER - TREATED OR	
UNTREATED - EXTREME FIBER STRESS	1,800 LBS. PER SQ. IN.
COMPRESSION PERPENDICULAR TO GRAIN OF TIMBER	375 LBS. PER SQ. IN.
EQUIVALENT FLUID PRESSURE OF EARTH	30 LBS. PER CU. FT. (MINIMUM)

MATERIAL AND WORKMANSHIP:

EXCEPT AS MAY OTHERWISE BE SPECIFIED ON PLANS OR IN THE SPECIAL PROVISIONS, ALL MATERIAL AND WORKMANSHIP SHALL BE IN ACCORDANCE WITH THE 2006 "STANDARD SPECIFICATIONS FOR ROADS AND STRUCTURES" OF THE N. C. DEPARTMENT OF TRANSPORTATION.

STEEL SHEET PILING FOR PERMANENT OR TEMPORARY APPLICATIONS SHALL BE HOT ROLLED.

CONCRETE:

UNLESS OTHERWISE REQUIRED ON PLANS, CLASS A CONCRETE SHALL BE USED FOR ALL PORTIONS OF ALL STRUCTURES WITH THE EXCEPTION THAT: CLASS AA CONCRETE SHALL BE USED IN BRIDGE SUPERSTRUCTURES, ABUTMENT BACKWALLS, AND APPROACH SLABS; AND CLASS B CONCRETE SHALL BE USED FOR SLOPE PROTECTION AND RIP RAP.

CONCRETE CHAMFERS:

UNLESS OTHERWISE NOTED ON THE PLANS, ALL EXPOSED CORNERS ON STRUCTURES SHALL BE CHAMFERED 3/4" WITH THE FOLLOWING EXCEPTIONS: TOP CORNERS OF CURBS MAY BE ROUNDED TO 1-1/2" RADIUS WHICH IS BUILT INTO CURB FORMS; CORNERS OF TRANSVERSE FLOOR EXPANSION JOINTS SHALL BE ROUNDED WITH A 1/4" FINISHING TOOL UNLESS OTHERWISE REQUIRED ON PLANS; AND CORNERS OF EXPANSION JOINTS IN THE ROADWAY FACES AND TOPS OF CURBS AND SIDEWALKS SHALL BE ROUNDED TO A 1/4" RADIUS WITH A FINISHING STONE OR TOOL UNLESS OTHERWISE REQUIRED ON PLANS.

DOWELS:

DOWELS WHEN INDICATED ON PLANS AS FOR CULVERT EXTENSIONS, SHALL BE EMBEDDED AT LEAST 12" INTO THE OLD CONCRETE AND GROUTED INTO PLACE WITH 1:2 CEMENT MORTAR.

ALLOWANCE FOR DEAD LOAD DEFLECTION, SETTLEMENT, ETC. IN CASTING SUPERSTRUCTURES:

BRIDGES SHALL BE BUILT ON THE GRADE OR VERTICAL CURVE SHOWN ON PLANS. SLABS, CURBS AND PARAPETS SHALL CONFORM TO THE GRADE OR CURVE.

ALL DIMENSIONS WHICH ARE GIVEN IN SECTION AND ARE AFFECTED BY DEAD LOAD DEFLECTIONS ARE DIMENSIONS AT CENTER LINE OF BEARING UNLESS OTHERWISE NOTED ON PLANS. IN SETTING FORMS FOR STEEL BEAM BRIDGES AND PRESTRESSED CONCRETE GIRDER BRIDGES, ADJUSTMENTS SHALL BE MADE DUE TO THE DEAD LOAD DEFLECTIONS FOR THE ELEVATIONS SHOWN. WHERE BLOCKS ARE SHOWN OVER BEAMS FOR BUILDING UP TO THE SLAB, THE VERTICAL DIMENSIONS OF THE BLOCKS SHALL BE ADJUSTED BETWEEN BEARINGS TO COMPENSATE FOR DEAD LOAD DEFLECTIONS, VERTICAL CURVE ORDINATE, AND ACTUAL BEAM CAMBER. WHERE BOTTOM OF SLAB IS IN LINE WITH BOTTOM OF TOP FLANGES, DEPTH OF SLAB BETWEEN BEARINGS SHALL BE ADJUSTED TO COMPENSATE FOR DEAD LOAD DEFLECTION, VERTICAL CURVE ORDINATE, AND ACTUAL BEAM CAMBER.

IN SETTING FALSEWORK AND FORMS FOR REINFORCED CONCRETE SPANS, AN ALLOWANCE SHALL BE MADE FOR DEAD LOAD DEFLECTIONS, SETTLEMENT OF FALSEWORK, AND PERMANENT CAMBER WHICH SHALL BE PROVIDED FOR IN ADDITION TO THE ELEVATIONS SHOWN. AFTER REMOVAL OF THE FALSEWORK, THE FINISHED STRUCTURES SHALL CONFORM TO THE PROFILE AND ELEVATIONS SHOWN ON THE PLANS AND CONSTRUCTION ELEVATIONS FURNISHED BY THE ENGINEER.

DETAILED DRAWINGS FOR FALSEWORK OR FORMS FOR BRIDGE SUPERSTRUCTURE AND ANY STRUCTURE OR PARTS OF A STRUCTURE AS NOTED ON THE PLANS SHALL BE SUBMITTED TO THE ENGINEER FOR APPROVAL BEFORE CONSTRUCTION OF THE FALSEWORK OR FORMS IS STARTED.

REINFORCING STEEL:

ALL REINFORCING STEEL SHALL BE DEFORMED. DIMENSIONS RELATIVE TO PLACEMENT OF REINFORCING ARE TO CENTERS OF BARS UNLESS OTHERWISE INDICATED IN THE PLANS. DIMENSIONS ON BAR DETAILS ARE TO CENTERS OF BARS OR ARE OUT TO OUT AS INDICATED ON PLANS.

WIRE BAR SUPPORTS SHALL BE PROVIDED FOR REINFORCING STEEL WHERE INDICATED ON THE PLANS. WHEN BAR SUPPORT PIECES ARE PLACED IN CONTINUOUS LINES, THEY SHALL BE SO PLACED THAT THE ENDS OF THE SUPPORTING WIRES SHALL BE LAPPED TO LOCK LEGS ON ADJOINING PIECES.

STRUCTURAL STEEL:

AT THE CONTRACTOR'S OPTION, HE MAY SUBSTITUTE 7/8" Ø SHEAR STUDS FOR THE ¾" Ø STUDS SPECIFIED ON THE PLANS. THIS SUBSTITUTION SHALL BE MADE AT THE RATE OF 3 - 7/8" Ø STUDS FOR 4 - 3/4" Ø STUDS, AND STUD SPACING CHANGES SHALL BE MADE AS NECESSARY TO PROVIDE THE SAME EQUIVALENT NUMBER OF 7/8" Ø STUDS ALONG THE BEAM AS SHOWN FOR 3/4" Ø STUDS BASED ON THE RATIO OF 3 - 7/8" Ø STUDS FOR 4 - 3/4" Ø STUDS. STUDS OF THE LENGTH SPECIFIED ON THE PLANS MUST BE PROVIDED. THE MAXIMUM SPACING SHALL BE 2'-0".

EXCEPT AT THE INTERIOR SUPPORTS OF CONTINUOUS BEAMS WHERE THE COVER PLATE IS IN CONTACT WITH BEARING PLATE, THE CONTRACTOR MAY, AT HIS OPTION, SUBSTITUTE FOR THE COVER PLATES DESIGNATED ON THE PLANS COVER PLATES OF THE EQUIVALENT AREA PROVIDED THESE PLATES ARE AT LEAST 5/16" IN THICKNESS AND DO NOT EXCEED A WIDTH EQUAL TO THE FLANGE WIDTH LESS 2" OR A THICKNESS EQUAL TO 2 TIMES THE FLANGE THICKNESS. THE SIZE OF FILLET WELDS SHALL CONFORM TO THE REQUIREMENTS OF THE CURRENT ANSI/AASHTO/AWS "BRIDGE WELDING CODE". ELECTROSLAG WELDING WILL NOT BE PERMITTED.

WITH THE SOLE EXCEPTION OF EDGES AT SURFACES WHICH BEAR ON OTHER SURFACES, ALL SHARP EDGES AND ENDS OF SHAPES AND PLATES SHALL BE SLIGHTLY ROUNDED BY SUITABLE MEANS TO A RADIUS OF APPROXIMATELY 1/16 INCH OR EQUIVALENT FLAT SURFACE AT A SUITABLE ANGLE PRIOR TO PAINTING, GALVANIZING, OR METALLIZING.

HANDRAILS AND POSTS:

METAL STANDARDS AND FACES OF THE CONCRETE END POSTS FOR THE METAL RAIL SHALL BE SET NORMAL TO THE GRADE OF THE CURB, UNLESS OTHERWISE SHOWN ON PLANS. THE METAL RAIL AND TOPS OF CONCRETE POSTS USED WITH THE ALUMINUM RAIL SHALL BE BUILT PARALLEL TO THE GRADE OF THE CURB.

METAL HANDRAILS SHALL BE IN ACCORDANCE WITH THE PLANS. RAILS SHALL BE AS MANUFACTURED FOR BRIDGE RAILING. CASTINGS SHALL BE OF A UNIFORM APPEARANCE. FINS AND OTHER DEFORMATIONS RESULTING FROM CASTING OR OTHERWISE SHALL BE REMOVED IN A MANNER SO THAT A UNIFORM COLORING OF THE COMPLETED CASTING SHALL BE OBTAINED. CASTINGS WITH DISCOLORATIONS OR OF NON-UNIFORM COLORING WILL NOT BE ACCEPTED. CERTIFIED MILL REPORTS ARE REQUIRED FOR METAL RAILS AND POSTS.

SPECIAL NOTES:

GENERALLY, IN CASE OF DISCREPANCY, THIS STANDARD SHEET OF NOTES SHALL GOVERN OVER THE SPECIFICATIONS, BUT THE REMAINDER OF THE PLANS SHALL GOVERN OVER NOTES HEREON, AND SPECIAL PROVISIONS SHALL GOVERN OVER ALL. SEE SPECIFICATIONS ARTICLE 105-4.

ENGLISH

JANUARY, 1990

T.I.P. NO.	SHEET NO.
B-4250	UC-1

STATE OF NORTH CAROLINA
DIVISION OF HIGHWAYS

UTILITY CONSTRUCTION PLANS
ROBESON COUNTY

LOCATION: SR 1750 BRIDGE # 35 OVER BIG MARSH SWAMP

TYPE OF WORK: UTILITY CONSTRUCTION

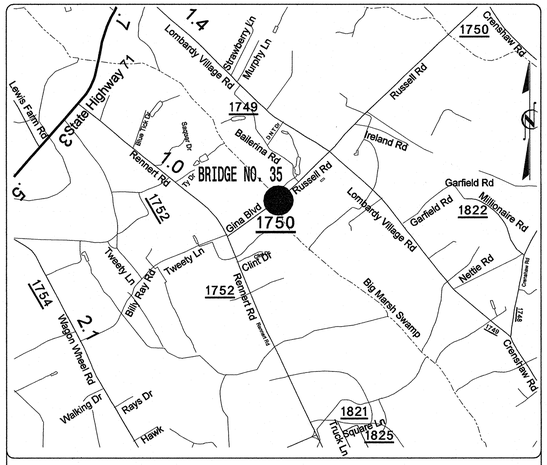

VICINITY MAP
(NOT TO SCALE)

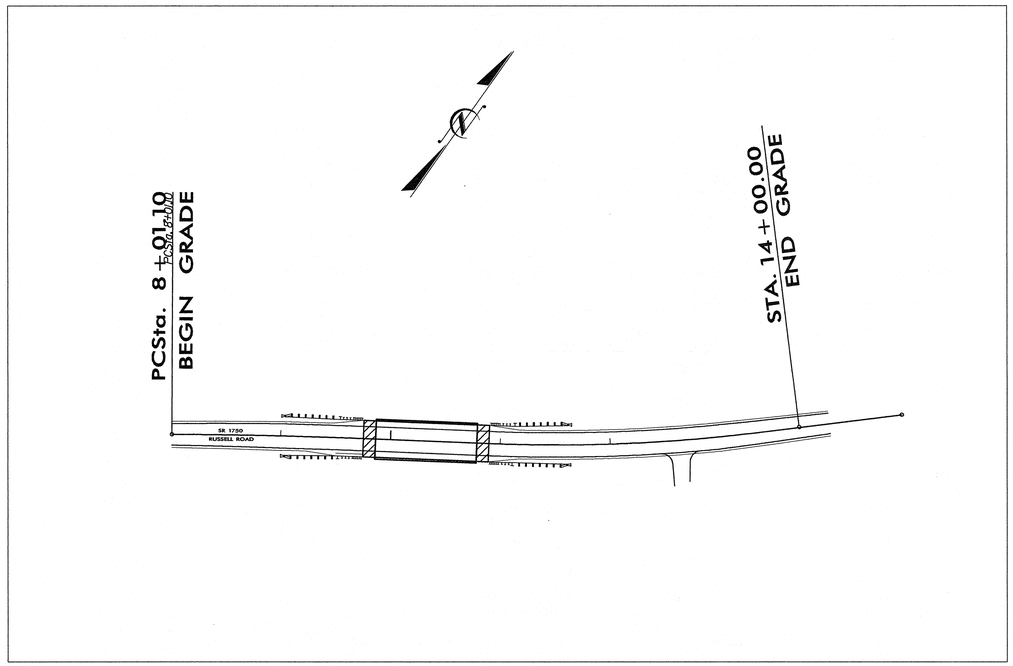

TIP PROJECT: B-4250

WBS: 33592

INDEX OF SHEETS

SHEET NO.	*DESCRIPTION*
UC-1	*TITLE SHEET*
UC-2	*UTILITY CONSTRUCTION PLAN SHEETS*
UC-3	*PROFILE SHEET & DETAIL SHEET*

WATER OWNER ON PROJECT

(1) WATER- ROBESON COUNTY
DEPARTMENT OF PUBLIC WORKS

559 JONES FRANKLIN ROAD
SUITE 164

Raleigh, N.C. 27606
Bus: 919 851 8077
Fax: 919 851 8107
License: F-0377

Prepared by

WETHERILL ENGINEERING

UTILITY COORDINATOR *DANNY PURYEAR*

SEAL

NORTH CAROLINA PROFESSIONAL SEAL 10773 ENGINEER EDWARD G. WETHERILL

10/13/11

FOR:

HIGHWAY DIVISION 6
DISTRICT 1 ROBESON COUNTY

HIGHWAY DIVISION 6
DISTRICT 1 ROBESON COUNTY
PO BOX 2157, 28359 (MAIL)
872 NC 711 HIGHWAY, 28360 (DELIVERY)
LUMBERTON, NC

Chuck Miller, Jr., P.E.	*DISTRICT ENGINEER*
Sonny Upole, Jr., P.E.	*DIVISION BRIDGE PROGRAM MANANGER*
Nicky Garrell	*BRIDGE MAINTENANCE TECHNICIAN*

09/08/99
$$$$$SYSTIME$$$$
$$$$$$$$$$$$$$DGN$$$$$$$$$$$$$$
$$$$$USERNAME$$$$

PROJECT REFERENCE NO.	SHEET NO.
B-4250	UC-2

DESIGNED BY: DHP
DRAWN BY: DHP
CHECKED BY: DHP
APPROVED BY: EGW
REVISED:

NORTH CAROLINA DEPARTMENT OF TRANSPORTATION

UTILITIES ENGINEERING SEC.
PHONE:(919)250-4128
FAX:(919)250-4119

NORTH CAROLINA PROFESSIONAL SEAL 10779 ENGINEER EDWARD G. WETHERILL 10/13/11

UTILITY CONSTRUCTION PLANS ONLY

UTILITY CONSTRUCTION

NOTE: The Contractor Shall Provide All Necessary Fittings To Make Connections To All Exiting Water Lines

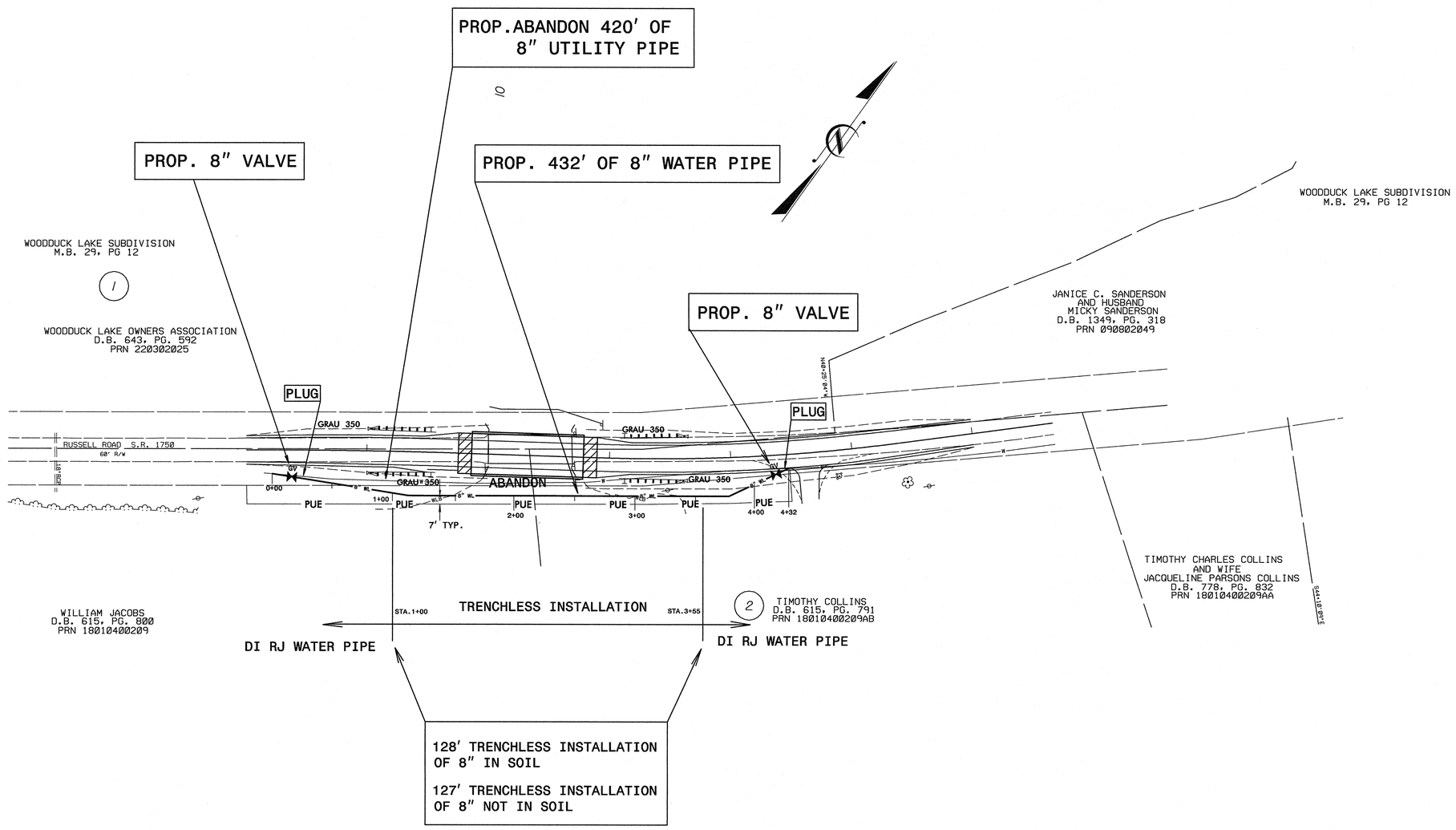

5/14/99

$$$$SYSTIME$$$$
$$$$USERNAME$$$$

PROJECT REFERENCE NO.	SHEET NO.
B-4250	UC-3
DESIGNED BY: DHP	
DRAWN BY: DHP	
CHECKED BY: DHP	
APPROVED BY: EGW	
REVISED:	
NORTH CAROLINA DEPARTMENT OF TRANSPORTATION	
UTILITIES ENGINEERING SEC. PHONE:(919)250-4128 FAX:(919)250-4119	UTILITY CONSTRUCTION PLANS ONLY

NORTH CAROLINA PROFESSIONAL SEAL 10779 ENGINEER EDWARD G. WETHERILL 10/13/11

UTILITY CONSTRUCTION

REVISIONS

5/17/99

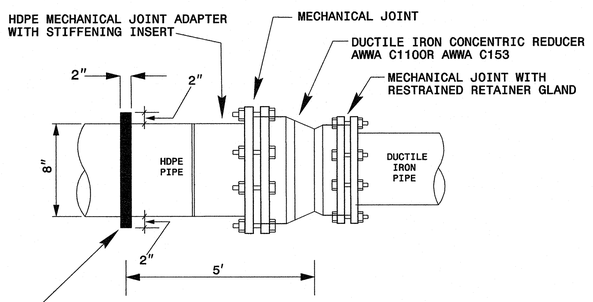

NOTE: SEE SEPARATE DETAIL FOR CONCRETE THRUST COLLAR.
IF HDPE IS USED THE INSIDE DIAMETER SHALL BE EQUAL TO OR GREATER THAN THE 8" DI WATER PIPE.

TRANSITION DETAIL FROM HDPE TO DI WATER PIPE

TRENCH DETAIL

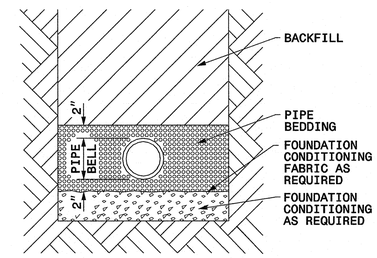

PLACE FOUNDATION CONDITIONING MATERIAL BELOW BEDDING IF REQUIRED, AS DIRECTED BY ENGINEER. PIPE BEDDED IN SELECT MATERIAL, CLASS II (TYPE 1) OR CLASS III. TRENCH BACKFILLED IN LOOSE 6" LAYERS COMPACTED TO TOP OF TRENCH USING LOCAL EXCAVATED MATERIAL IF APPROVED BY THE ENGINEER, OR SELECT MATERIAL. ALL MATERIAL SHALL BE FREE OF ROCKS, FOREIGN MATERIAL, AND FROZEN EARTH. COMPACTION SHALL BE TO APPROXIMATELY 95% DENSITY IN ACCORDANCE WITH AASHTO T-99 AS MODIFIED BY THE DEPARTMENT OF TRANSPORTATION.

MAXIMUM TRENCH WIDTH AT TOP OF PIPE

NOMINAL PIPE SIZE (INCHES)	TRENCH WIDTH (INCHES)	NOMINAL PIPE SIZE (INCHES)	TRENCH WIDTH (INCHES)
4	28	20	44
6	30	24	48
8	32	30	54
10	34	36	60
12	36	42	66
14	38	48	72
16	40	54	78
18	42		

PROPOSED 8" WATER LINE
SEE SHEET UC-2

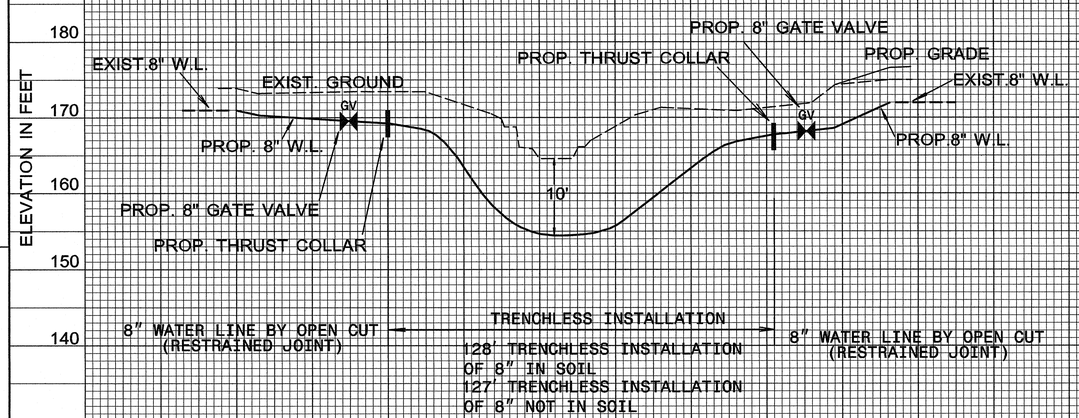

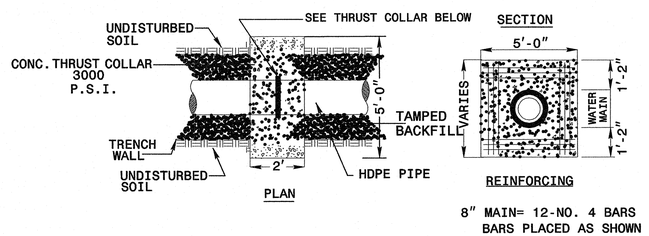

NOTE: BOTTOM OF TRENCH NEEDS TO BE STABILIZED TO SUPPORT THE WEIGHT OF THE THRUST COLLAR.

CONCRETE THRUST COLLAR DETAIL - 8" WATER LINES