09/08/99

TIP PROJECT: B-4249

CONTRACT: DO00152

STATE	STATE PROJECT REFERENCE NO.	SHEET NO.	TOTAL SHEETS
N.C.	B-4249	1	

STATE PROJ. NO.	F.A. PROJ. NO.	DESCRIPTION
38347.3.1		

STATE OF NORTH CAROLINA
DIVISION OF HIGHWAYS

ROBESON COUNTY

LOCATION: BRIDGE NO. 143 OVER ASHPOLE SWAMP ON SR 1146 (PURVIS ROAD) BETWEEN SR 1148 (BRAYBOY ROAD) AND SR 1144 (ADAMS ROAD).

TYPE OF WORK: GRADING, PAVING, DRAINAGE, UTILITIES AND STRUCTURE.

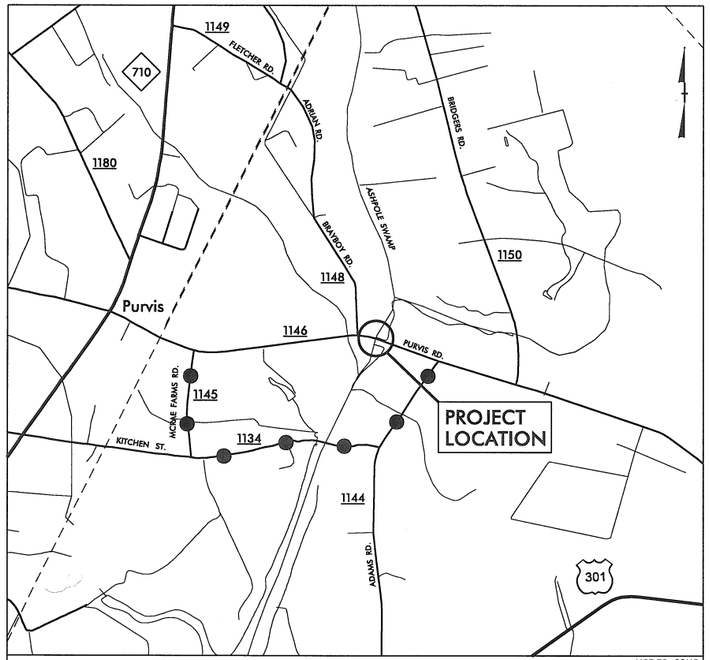

VICINITY MAP

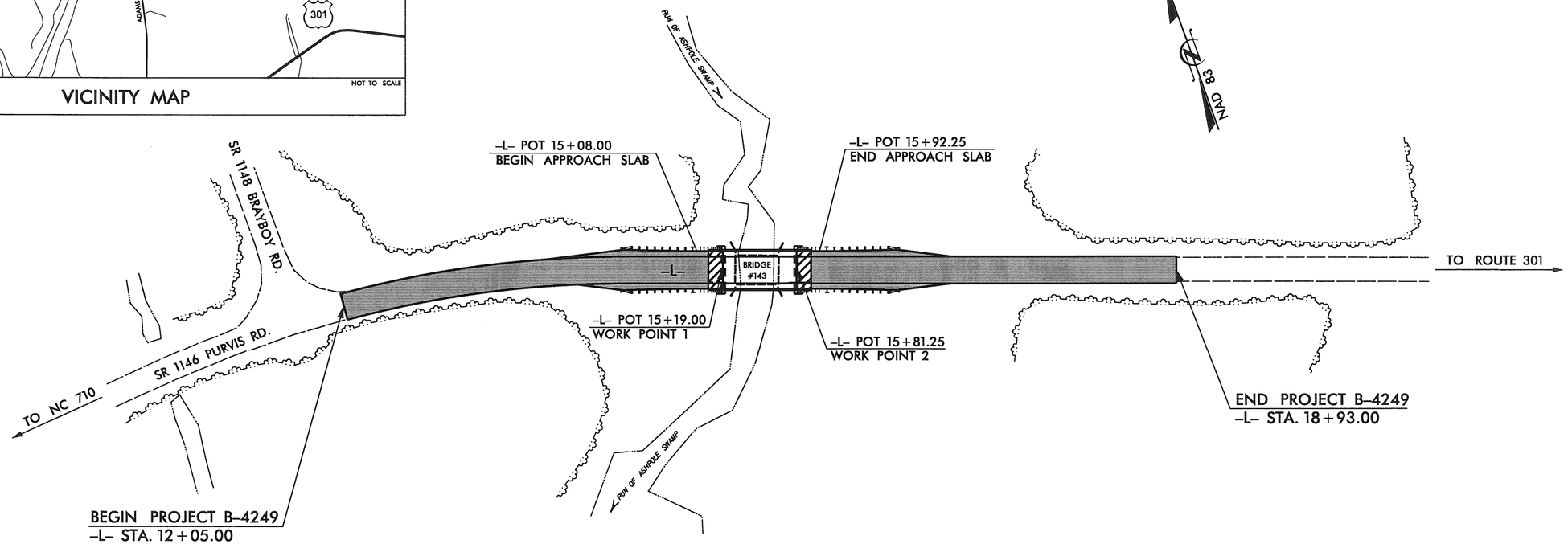

GRAPHIC SCALES

30 15 0 30 60
PLANS

25 0 25 50
PROFILE (HORIZONTAL)

5 0 5 10
PROFILE (VERTICAL)

DESIGN DATA

ADT 2003 = 650
ADT 2025 = 1300
DHV = %
D = %
T = 6 %
V = 55 MPH

FUNCTIONAL CLASS:
RURAL LOCAL

PROJECT LENGTH

LENGTH ROADWAY PROJECT B-4249 = 0.118 mi.
LENGTH STRUCTURE PROJECT B-4249 = 0.012 mi.
TOTAL LENGTH STATE PROJECT B-4249 = 0.130 mi.

NCDOT CONTACT: ZAKI WAFA, PE
STRUCTURES MANAGEMENT UNIT-PROJECT MANAGER

421 FAYETTEVILLE ST
SUITE 400
RALEIGH, NC 27601
T 919.380.8750
F 919.380.8752
www.stewart-eng.com
FIRM NO.: C-1061
STEWART

2012 STANDARD SPECIFICATIONS

RIGHT OF WAY DATE:

LETTING DATE:
APRIL 26, 2012

Prepared in the Office of:
STEWART ENGINEERING, INC.

FOR:
NORTH CAROLINA DEPARTMENT OF TRANSPORTATION

DAVID RUGGLES, PE
PROJECT ENGINEER

BENJAMIN CRAWFORD, PE
PROJECT DESIGN ENGINEER

STRUCTURES ENGINEER

NORTH CAROLINA PROFESSIONAL SEAL 11725 ENGINEER DAVID P. RUGGLES

3-13-12
P.E.

SIGNATURE:

ROADWAY DESIGN ENGINEER

NORTH CAROLINA PROFESSIONAL SEAL 32606 ENGINEER BENJAMIN P. CRAWFORD

P.E.

SIGNATURE:

DIVISION OF HIGHWAYS
STATE OF NORTH CAROLINA

P.E.
STATE DESIGN ENGINEER

3/26/2012
jtb:\Roadway\Proj\B4249_tsh.dgn
USER:bstep

PROJECT REFERENCE NO.	SHEET NO.
B-4249	2

ROADWAY DESIGN ENGINEER

PAVEMENT SCHEDULE

C1	PROP. APPROX. 2″ ASPHALT CONCRETE SURFACE COURSE, TYPE SF9.5A, AT AN AVERAGE RATE OF 110 LBS. PER SQ. YD. IN EACH OF TWO LAYERS.	R	SHOULDER BERM GUTTER - MODIFIED TO 8″ DEPTH
C2	PROP. VAR. DEPTH ASPHALT CONCRETE SURFACE COURSE, TYPE SF9.5A, AT AN AVERAGE RATE OF 110 LBS. PER SQ. YD. PER 1″ DEPTH. TO BE PLACED IN LAYERS NOT TO EXCEED 1½″ IN DEPTH.	T	EARTH MATERIAL.
E1	PROP. APPROX. 6″ ASPHALT CONCRETE BASE COURSE, TYPE B25.0B, AT AN AVERAGE RATE OF 342 LBS. PER SQ. YD. IN EACH OF 2 LAYERS.	U	EXISTING PAVEMENT.
E2	PROP. VAR. DEPTH ASPHALT CONCRETE BASE COURSE, TYPE B25.0B, AT AN AVERAGE RATE OF 114 LBS. PER SQ. YD. PER 1″ DEPTH. TO BE PLACED IN LAYERS NOT LESS THAN 3″ IN DEPTH OR GREATER THAN 5½″ IN DEPTH.	W	VARIABLE DEPTH ASPHALT PAVEMENT (SEE STANDARD WEDGING DETAIL).

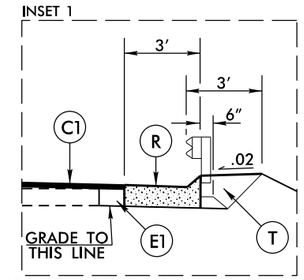

USE INSET 1 AT THE FOLLOWING LOCATIONS:
–L– 14+89.00 TO 15+08.00 (BEGIN APPROACH SLAB) (RIGHT)
–L– 15+92.25 (END APPROACH SLAB) TO 16+11.00 (RIGHT)

FDPS=FULL DEPTH PAVED SHOULDER

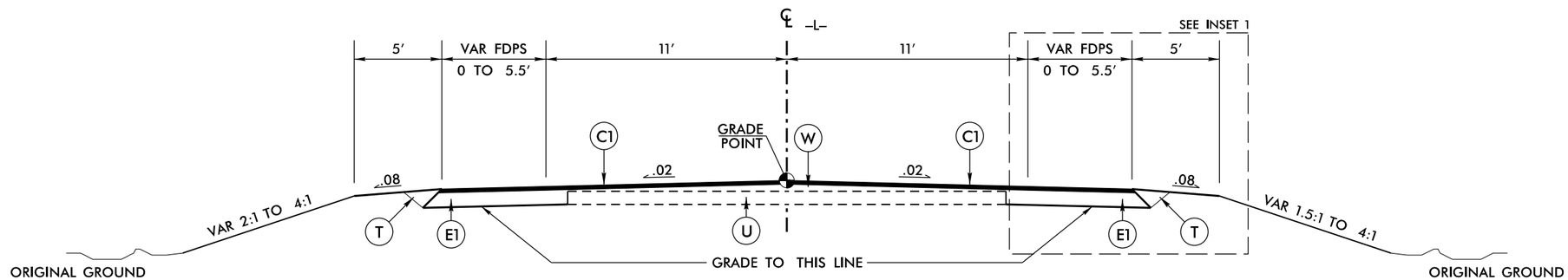

ROADWAY TYPICAL SECTION

–L– 12+05.00 TO 15+19.00 (BEGIN BRIDGE)
–L– 15+81.25 (END BRIDGE) TO 18+93.00

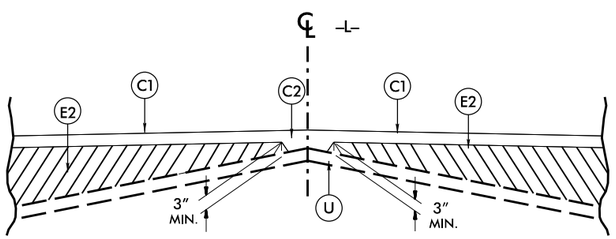

Detail Showing Method of Wedging

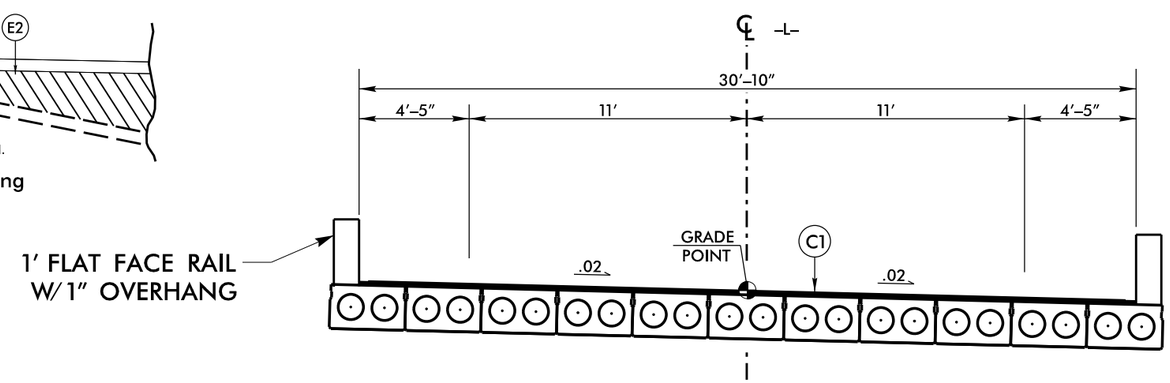

STRUCTURE TYPICAL SECTION

–L– 15+19.00 (WORK POINT 1) TO 15+81.25 (WORK POINT 2)
NOTE: SEE SHEET NO. 7 FOR PAVEMENT DEPTH ON TOP OF BRIDGE.

6/2/99

3/13/2012
J:\Roadway\Proj\B4249_typ.dgn
USERNAME=ecrd

PROJECT REFERENCE NO.	SHEET NO.
B-4249	3
R/W SHEET NO.	
ROADWAY DESIGN ENGINEER	

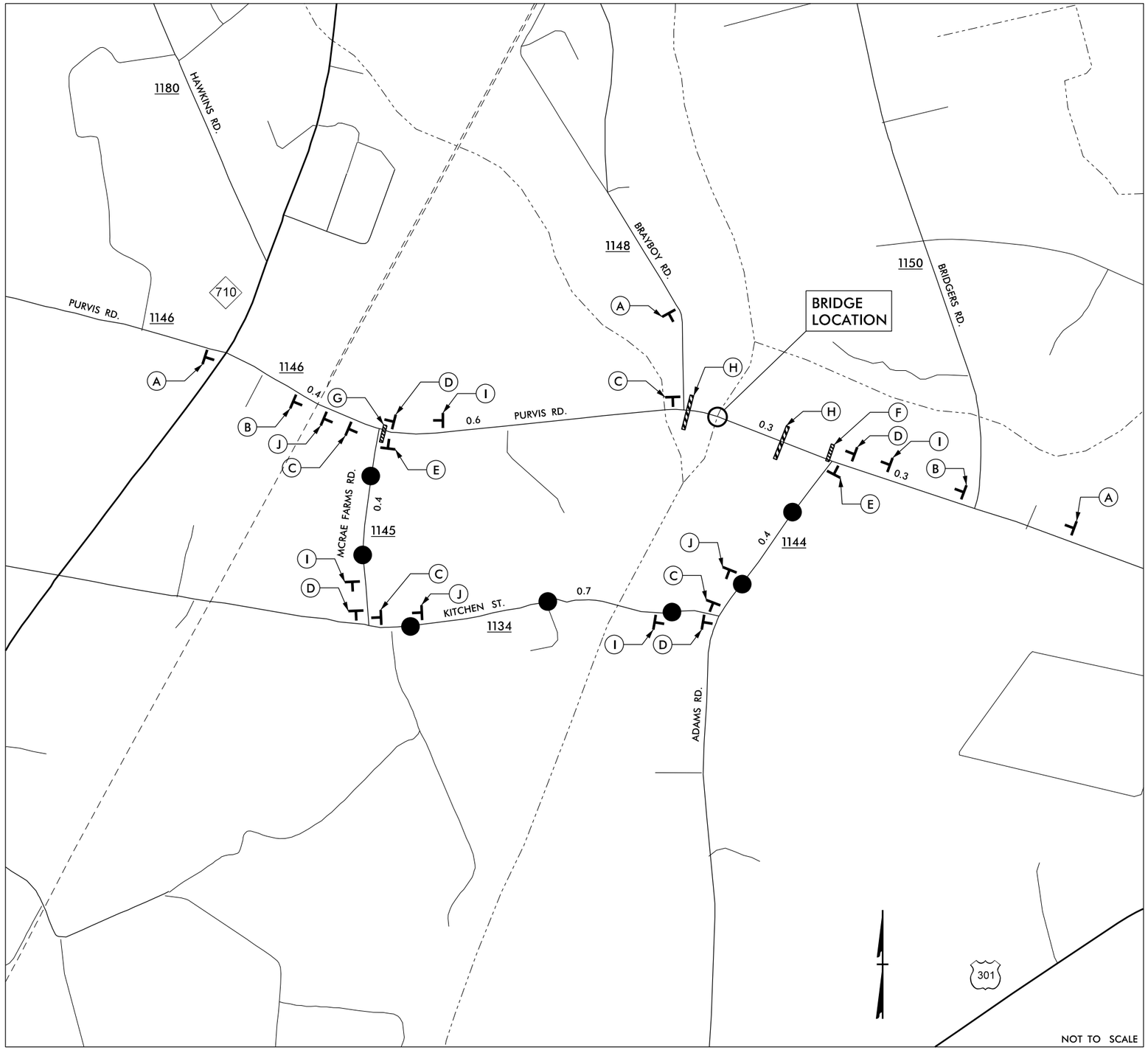

DETOUR ROUTE

ASSEMBLY A

DETOUR AHEAD
W20-2
48" X 48"

ASSEMBLY B

DETOUR 1000 FT
W20-2
48" X 48"

ASSEMBLY C

DETOUR
M4-8
24" x 12"

M6-1
21" x 15"

ASSEMBLY D

DETOUR
M4-8
24" x 12"

M6-1 L
21" x 15"

ASSEMBLY E

END DETOUR
M4-8 A
24" X 18"

ASSEMBLY F

ROAD CLOSED
R11-2
48"X30"
M4-10L
48"X18"
TYPE III BARRICADE

ASSEMBLY G

ROAD CLOSED
0.5 MILES AHEAD
LOCAL TRAFFIC ONLY
R11-3
60"X30"
M4-10R
48"X18"
TYPE III BARRICADE

ASSEMBLY H

ROAD CLOSED
R11-2
48" X 30"
TYPE III BARRICADE(S)

ASSEMBLY I

DETOUR
M4-8
24" x 12"

M5-1
21" X 15"

ASSEMBLY J

DETOUR
M4-8
24" x 12"

M5-1 R
21" X 15"

REVISIONS

8/17/99

3/28/2012
...\Roadway\Proj\B4249_tcp.dgn
USER: ...

PROJECT REFERENCE NO.	SHEET NO.
B-4249	4
R/W SHEET NO.	

ROADWAY DESIGN ENGINEER

29TH CAROLINA PROFESSIONAL SEAL 32606 ENGINEER BENJAMIN B. CRAMFORD 3/5/12

DATUM DESCRIPTION

THE LOCALIZED COORDINATE SYSTEM DEVELOPED FOR THIS PROJECT IS BASED ON THE STATE PLANE COORDINATES ESTABLISHED BY OTHERS FOR MONUMENT "GPS-1" WITH NAD 1983/2001 STATE PLANE GRID COORDINATES OF NORTHING: 304,653.61(ft) EASTING: 1,924,531.86(ft).
THE AVERAGE COMBINED GRID FACTOR USED ON THIS PROJECT (GROUND TO GRID) IS: 0.99993270.
THE N.C. LAMBERT GRID BEARING AND LOCALIZED HORIZONTAL GROUND DISTANCE FROM "GPS-1" TO -L- STATION 12+05.00 IS 1,203.20 FEET @ N83° 23' 18.58" E.
ALL LINEAR DIMENSIONS ARE LOCALIZED HORIZONTAL DISTANCES.
VERTICAL DATUM USED IS NAVD 88.

SBG = SHOULDER BERM GUTTER
DI = DROP INLET
RCP = REINFORCED CONCRETE PIPE
GRAU = GUARDRAIL ANCHOR UNIT
SAU = STRUCTURE ANCHOR UNIT

DRAINAGE SUMMARY

(1) -L- Sta. 14+90
DI (STD. 840.14, 840.15 & 840.16)
TOP EL = 126.65
INVERT EL = 124.20

(2) -L- Sta. 14+90
OUTLET 10'-12" RCP
INVERT EL = 124.10

(3) -L- Sta. 16+10
DI (STD. 840.14, 840.15 & 840.16)
TOP EL = 127.70
INVERT EL = 125.70

(4) -L- Sta. 16+10
OUTLET 10'-12" RCP
INVERT EL = 125.60

-L-

PI Sta 12+50.68
Δ = 24° 23' 04.5" (RT)
D = 6° 21' 58.3"
L = 383.03'
T = 194.46'
R = 900.00'

BRIDGE SKETCH

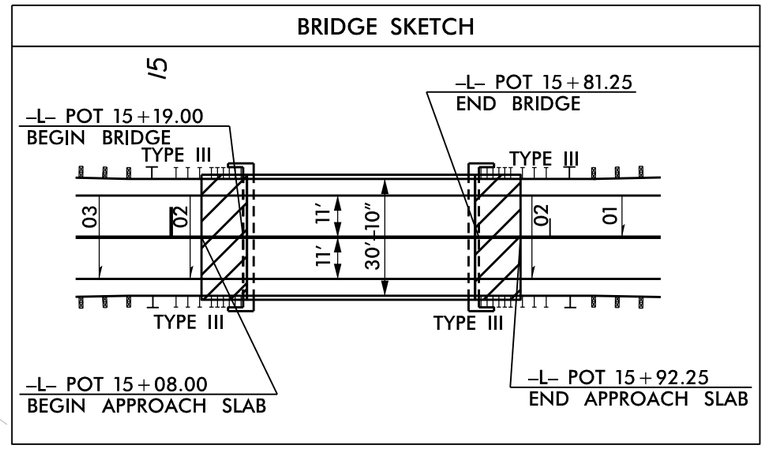

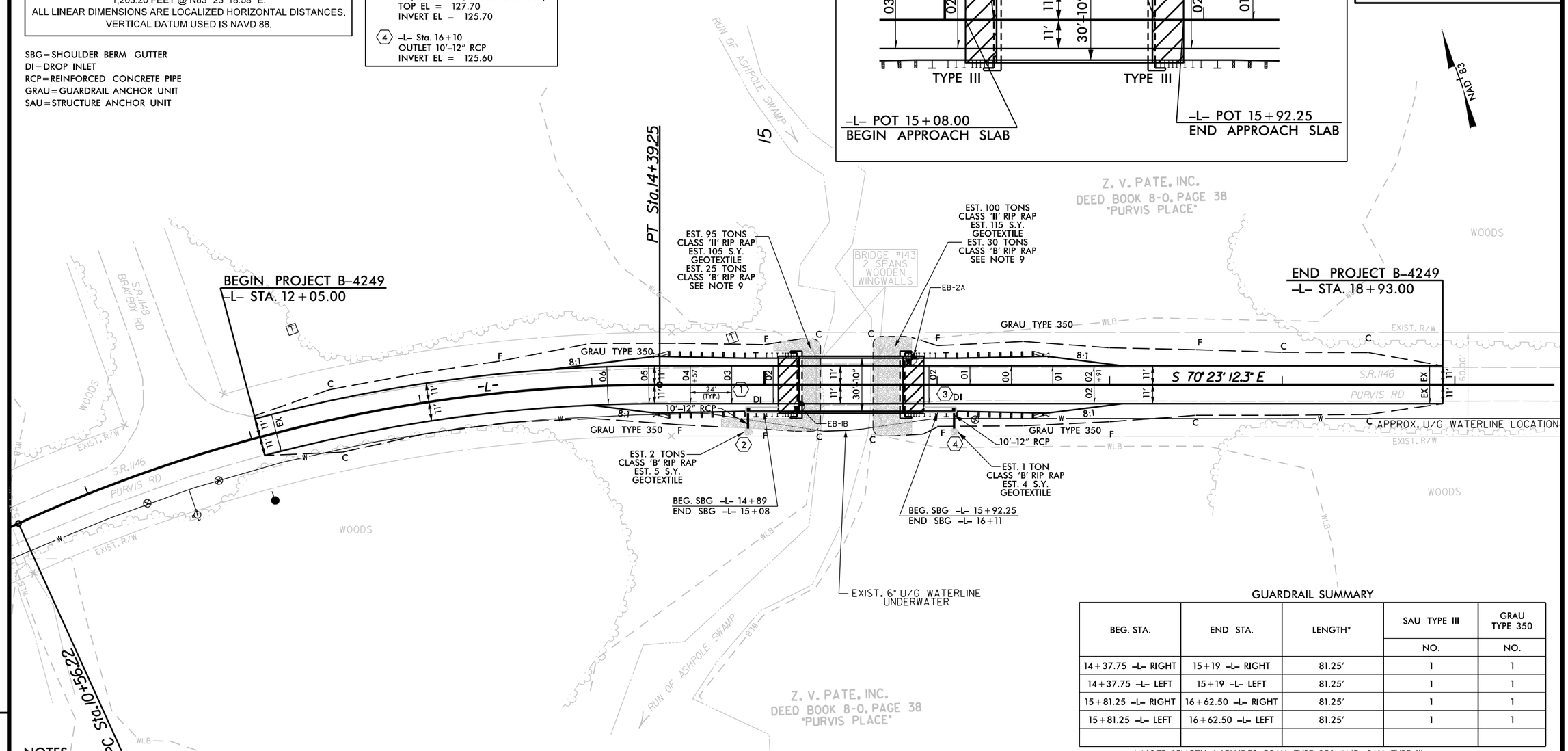

GUARDRAIL SUMMARY

BEG. STA.	END STA.	LENGTH*	SAU TYPE III	GRAU TYPE 350
			NO.	NO.
14+37.75 -L- RIGHT	15+19 -L- RIGHT	81.25'	1	1
14+37.75 -L- LEFT	15+19 -L- LEFT	81.25'	1	1
15+81.25 -L- RIGHT	16+62.50 -L- RIGHT	81.25'	1	1
15+81.25 -L- LEFT	16+62.50 -L- LEFT	81.25'	1	1

* NOTE: LENGTH INCLUDES GRAU TYPE 350 AND SAU TYPE III.

NOTES:

DENOTES GEOTECHNICAL BORING HOLE LOCATIONS

1. THIS STRUCTURE HAS BEEN DESIGNED IN ACCORDANCE WITH FHWA'S TECHNICAL ADVISORY T5140.20 (SCOUR AT BRIDGES).

2. THE EXISTING BRIDGE SUBSTRUCTURE SHALL BE REMOVED BY SAWING AND/OR NON-SHATTERING METHODS SUCH THAT DEBRIS WILL NOT FALL INTO THE WATER.

3. DRIVE PILES AT END BENT NO. 1 TO AN ELEVATION NO HIGHER THAN 65 FEET AND A MINIMUM BEARING CAPACITY OF 50 TONS EACH.

4. DRIVE PILES AT END BENT NO. 2 TO AN ELEVATION NO HIGHER THAN 52 FEET AND A MINIMUM BEARING CAPACITY OF 50 TONS EACH.

5. WHEN DRIVING PILES, DO NOT EXCEED THE MAXIMUM BLOW COUNT.

6. PILES SHALL BE DRIVEN CONTINUOUSLY IN ACCORDANCE WITH THE STANDARD SPECIFICATIONS SECTION 450-8 TO THE ESTIMATED LENGTH SHOWN ON THE PLANS (OR PAST MINIMUM TIP ELEVATION) UNTIL THE LOAD IS OBTAINED. IF LOAD IS STILL NOT OBTAINED AT THIS POINT, THE CONTRACTOR MAY SUSPEND DRIVING AND ALLOW THE PILE TO SET BEFORE RESUMING PILE DRIVING. WHEN DRIVING IS RESUMED, THE HAMMER SHALL BE WARM AND OPERATED A SUFFICIENT NUMBER OF BLOWS TO OVERCOME THE FRICTION FORCE (MIN. 10 BLOWS) BEFORE FINAL BEARING IS CHECKED.

7. TESTING PILES WITH THE PILE DRIVING ANALYZER (PDA) DURING DRIVING OR REDRIVING MAY BE REQUIRED. THE ENGINEER WILL DETERMINE THE NEED FOR PDA TESTING. SEE PILE DRIVING ANALYZER SPECIAL PROVISION.

8. THE QUANTITY OF RIP RAP TO BE PAID FOR WILL BE THE ACTUAL NUMBER OF TONS OF EACH CLASS OF RIP RAP WHICH HAS BEEN INCORPORATED INTO THE COMPLETED AND ACCEPTED WORK. THE RIP RAP WILL BE MEASURED BY BEING WEIGHED IN TRUCKS ON CERTIFIED PLATFORM SCALES OR OTHER CERTIFIED WEIGHING DEVICES. THE QUANTITY OF RIP RAP WILL BE PAID FOR AT THE CONTRACT UNIT PRICE PER TON.

PLAIN RIP RAP, CLASS 'II' (2'-0" THICK)	
END BENT NO. 1	95 TONS
END BENT NO. 2	100 TONS
TOTAL	195 TONS

9. AFTER CLASS 'II' RIP RAP PLACEMENT IS COMPLETED, PLACE CLASS 'B' RIP RAP OVER CLASS 'II' TO PROVIDE A SMOOTH SURFACE.

REVISIONS

8/17/99

3/26/2012
USER: bpeeler

EROSION CONTROL PLAN

PROJECT REFERENCE NO.	SHEET NO.
B-4249	5
R/W SHEET NO.	
ROADWAY DESIGN ENGINEER	

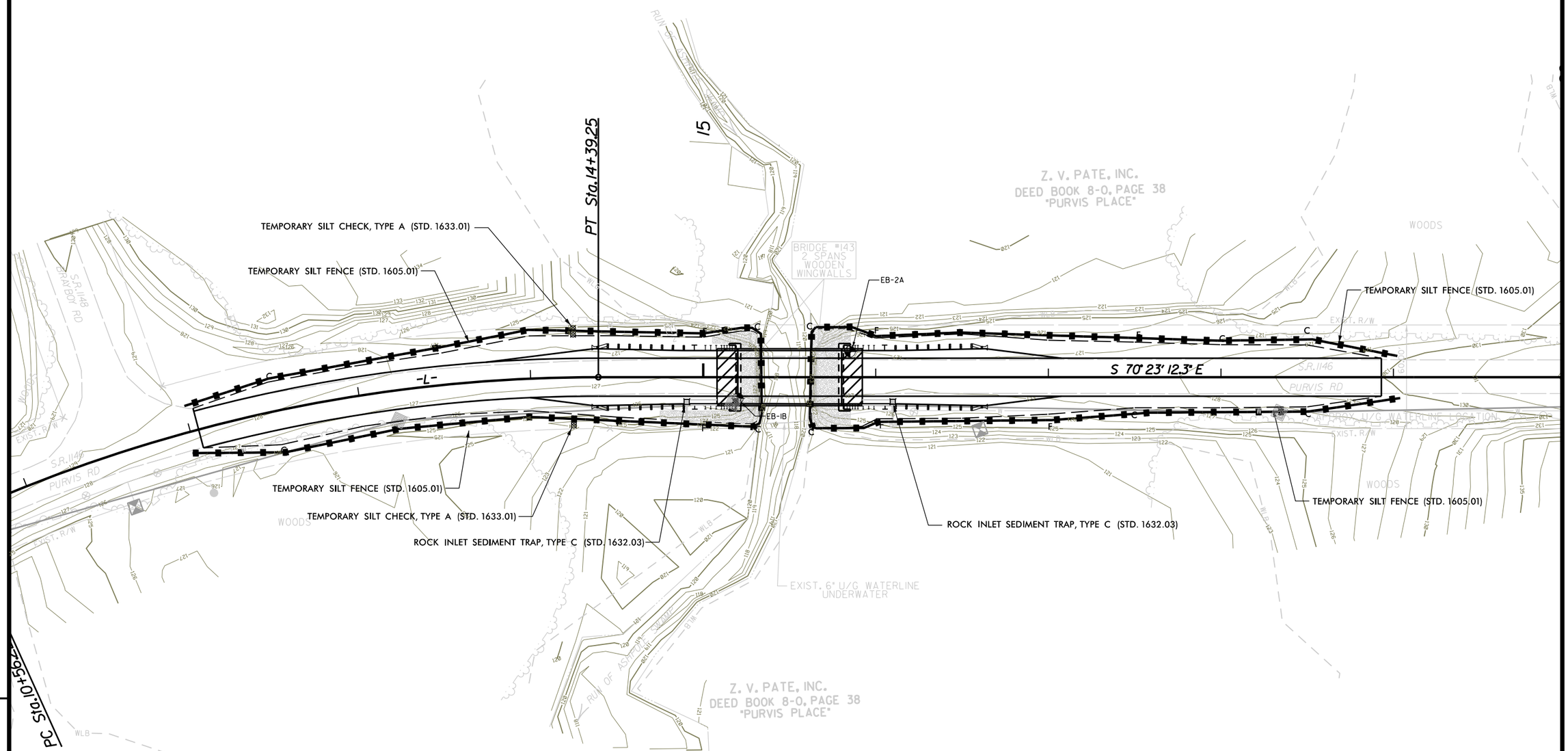

REVISIONS

8/17/99

3/13/2012
n:\roadway\proj\b4249_esc.dgn
jtetrick

PROJECT REFERENCE NO.	SHEET NO.
B-4249	6

ROADWAY DESIGN ENGINEER

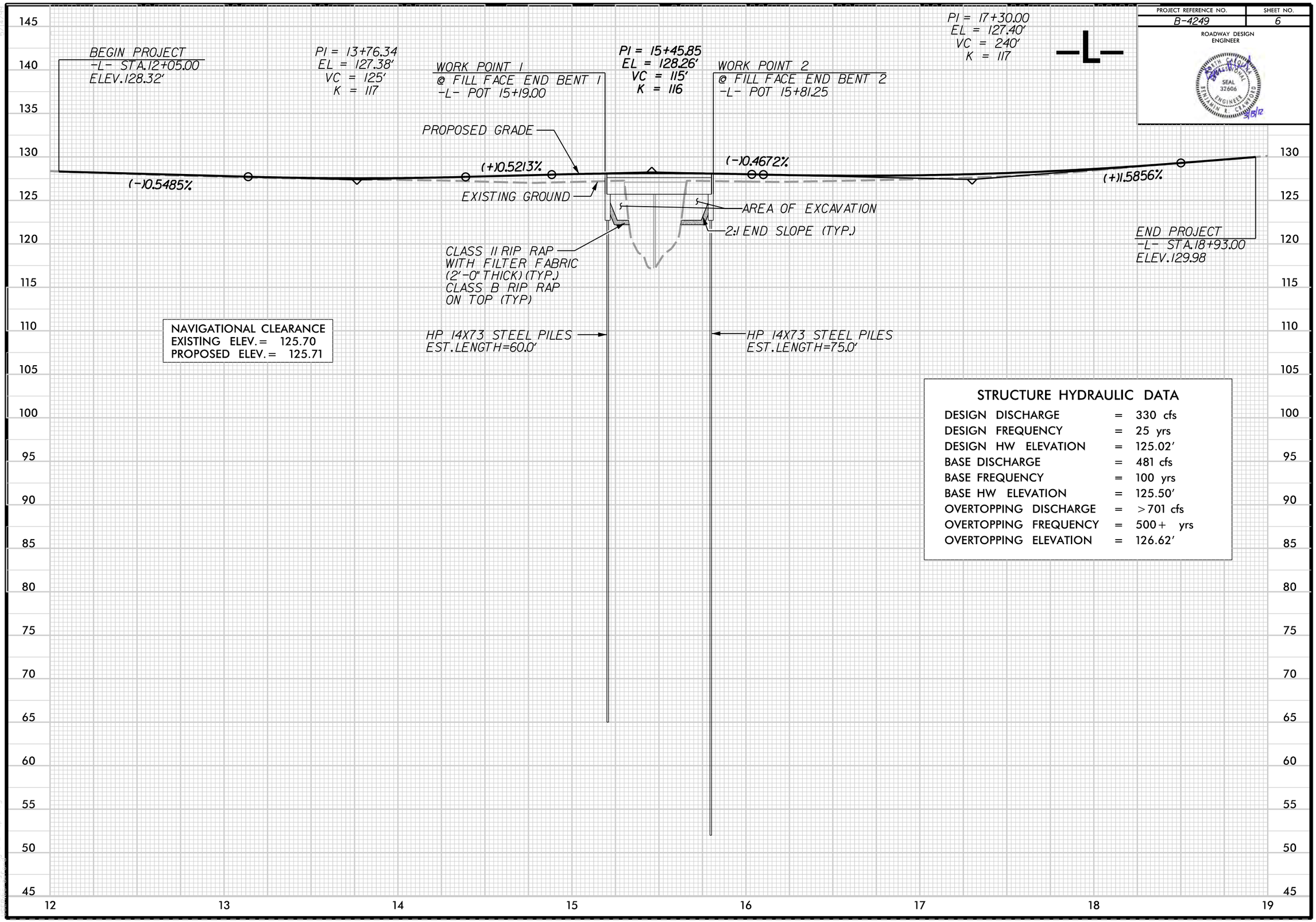

NAVIGATIONAL CLEARANCE
EXISTING ELEV. = 125.70
PROPOSED ELEV. = 125.71

STRUCTURE HYDRAULIC DATA

DESIGN DISCHARGE	=	330 cfs
DESIGN FREQUENCY	=	25 yrs
DESIGN HW ELEVATION	=	125.02'
BASE DISCHARGE	=	481 cfs
BASE FREQUENCY	=	100 yrs
BASE HW ELEVATION	=	125.50'
OVERTOPPING DISCHARGE	=	>701 cfs
OVERTOPPING FREQUENCY	=	500+ yrs
OVERTOPPING ELEVATION	=	126.62'

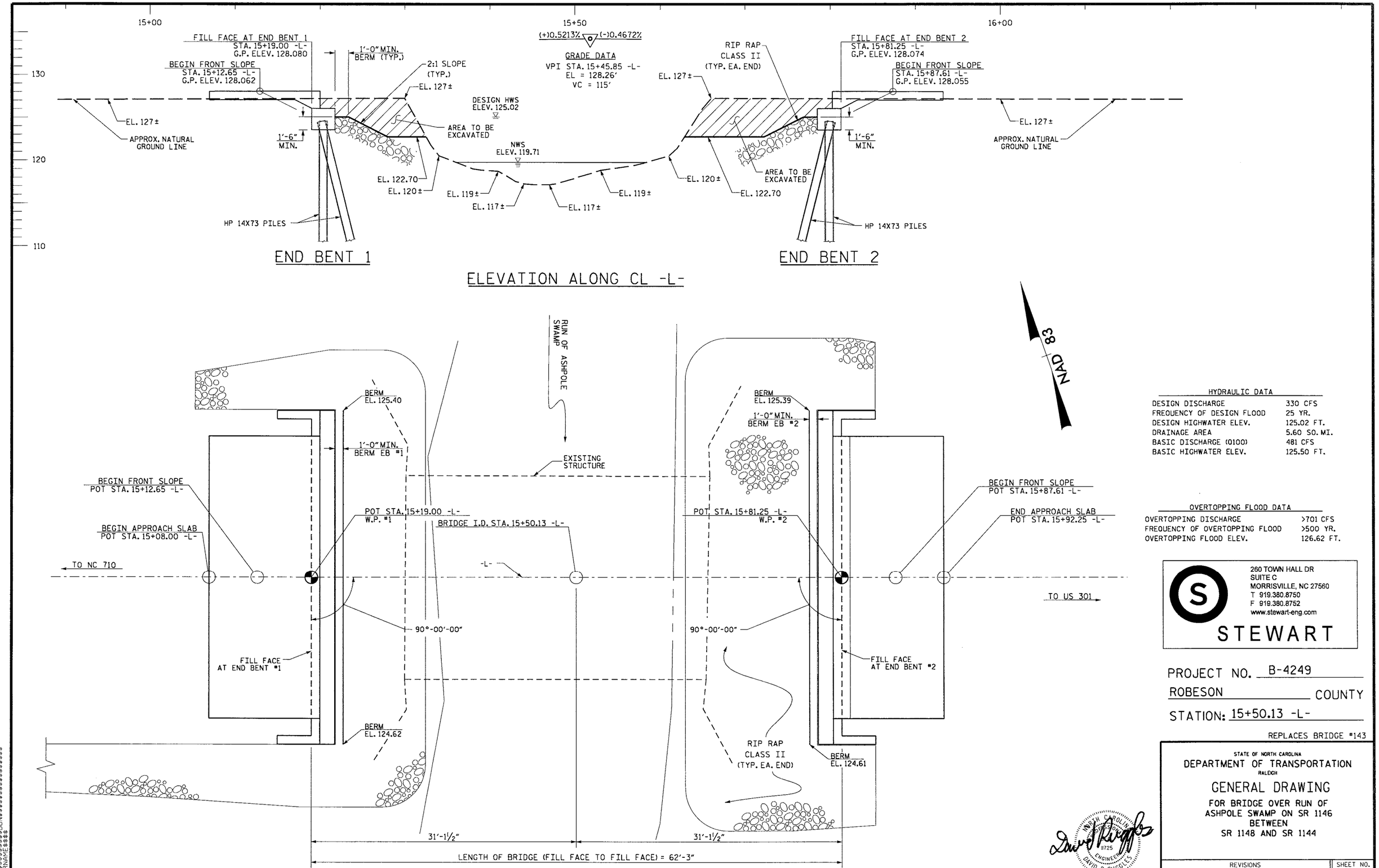

HYDRAULIC DATA

DESIGN DISCHARGE	330 CFS
FREQUENCY OF DESIGN FLOOD	25 YR.
DESIGN HIGHWATER ELEV.	125.02 FT.
DRAINAGE AREA	5.60 SQ. MI.
BASIC DISCHARGE (0100)	481 CFS
BASIC HIGHWATER ELEV.	125.50 FT.

OVERTOPPING FLOOD DATA

OVERTOPPING DISCHARGE	>701 CFS
FREQUENCY OF OVERTOPPING FLOOD	>500 YR.
OVERTOPPING FLOOD ELEV.	126.62 FT.

260 TOWN HALL DR
SUITE C
MORRISVILLE, NC 27560
T 919.380.8750
F 919.380.8752
www.stewart-eng.com
STEWART

PROJECT NO. B-4249

ROBESON COUNTY

STATION: 15+50.13 -L-

REPLACES BRIDGE #143

STATE OF NORTH CAROLINA
DEPARTMENT OF TRANSPORTATION
RALEIGH

GENERAL DRAWING

FOR BRIDGE OVER RUN OF
ASHPOLE SWAMP ON SR 1146
BETWEEN
SR 1148 AND SR 1144

NORTH CAROLINA PROFESSIONAL SEAL 11725 ENGINEER DAVID R. RUGGLES

3-12-12

REVISIONS						SHEET NO.
NO.	BY:	DATE:	NO.	BY:	DATE:	
1			3			TOTAL SHEETS
2			4			

DWG. 7 OF 15

DRAWN BY: PLJ DATE: 3-12

CHECKED BY: DRR DATE: 3-12

$$$$$$SYSTIME$$$$$
$$$$$$JCN$$$$$$$$$$$$$$$$
$$$$$$USERNAME$$$$

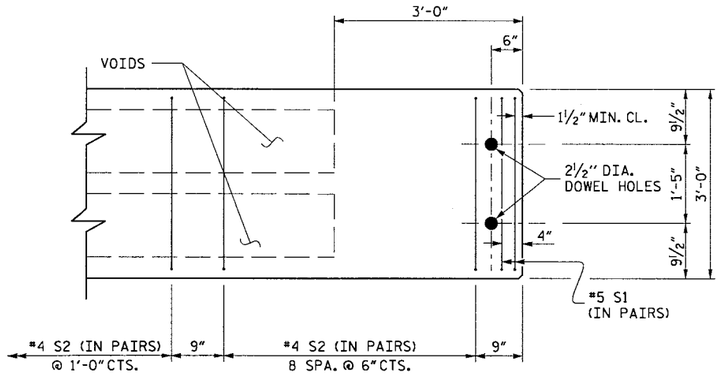

PART PLAN - SLAB SECTION

NOTE: #5 S3 BARS NOT SHOWN FOR CLARITY

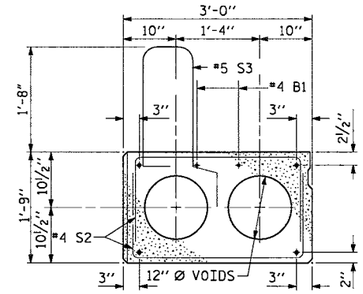

EXTERIOR SLAB SECTION

(FOR PRESTRESSED STRAND LAYOUT, SEE INTERIOR SLAB SECTION.)

NOTE: VERTICAL LEG OF #5S3 SHALL BE PLUMB, SEE PLACEMENT DETAIL ON SHEET 9 OF 15.

FINAL Δ = 2 13/16" (UP)

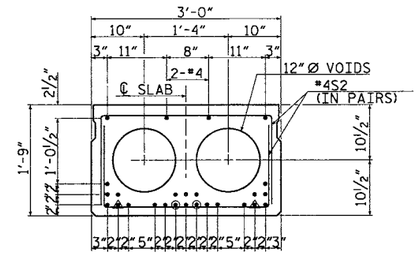

INTERIOR SLAB SECTION

24 - 0.6" Ø H.S. STRANDS

FINAL Δ = 2 13/16" (UP)

○ BOND SHALL BE BROKEN ON THESE STRANDS FOR A DISTANCE OF 12 FEET FROM END OF CORED SLAB UNIT. SEE STANDARD SPECIFICATIONS ARTICLE 1078-7.

△ BOND SHALL BE BROKEN ON THESE STRANDS FOR A DISTANCE OF 6 FEET FROM END OF CORED SLAB UNIT. SEE STANDARD SPECIFICATIONS ARTICLE 1078-7.

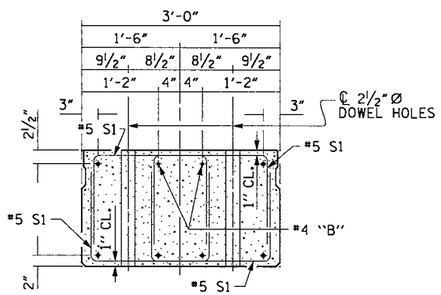

END ELEVATION

SHOWING PLACEMENT OF DOUBLE STIRRUPS AND LOCATION OF DOWEL HOLES. (STRAND LAYOUT NOT SHOWN.) INTERIOR SLAB UNIT SHOWN-EXTERIOR SLAB UNIT SIMILAR EXCEPT SHEAR KEY LOCATION.

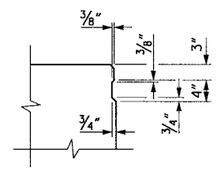

SHEAR KEY DETAIL

NOTE: OMIT SHEAR KEY ON OUTSIDE FACE OF EXTERIOR CORED SLABS.

GRADE 270 STRANDS	
	0.6" Ø L.R.
AREA (SQUARE INCHES)	0.217
ULTIMATE STRENGTH (LBS. PER STRAND)	58,600
APPLIED PRESTRESS (LBS. PER STRAND)	43,950

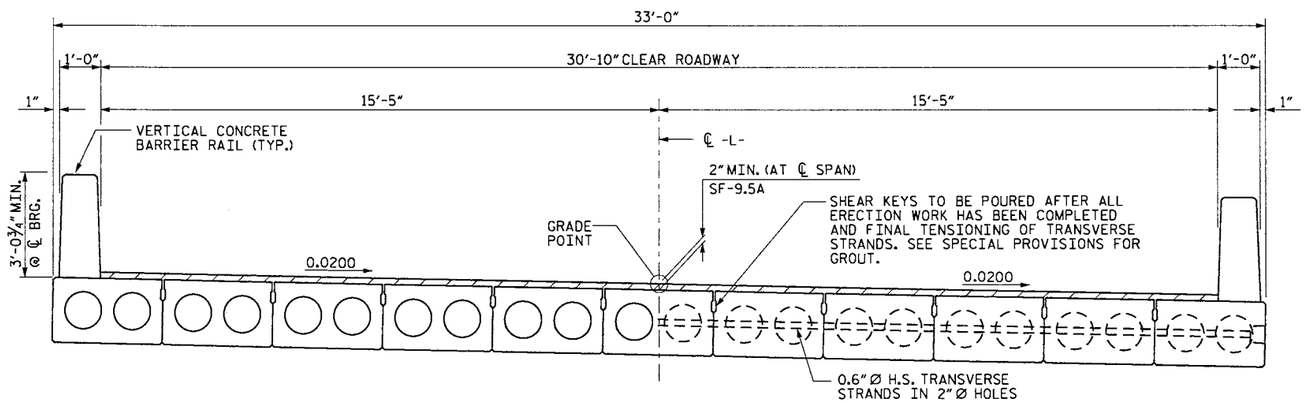

HALF SECTION @ VOIDS

HALF SECTION @ INTERMEDIATE DIAPHRAGMS

TYPICAL SECTION

NOTES

ASSUMED LIVE LOAD = HS 25-44 OR ALTERNATE LOADING.

CONCRETE 60' SPAN:
f'c = 7500 psi (MINIMUM COMPRESSIVE STRENGTH @ 28 DAYS)

f'ci = 5500 psi (MINIMUM COMPRESSIVE STRENGTH @ TRANSFER OF STRESSING FORCE)

ALL PRESTRESSING STRANDS SHALL BE 7 WIRE, LOW RELAXATION, GRADE 270 STRANDS AND SHALL CONFORM TO AASHTO M203, EXCEPT FOR SAMPLING REQUIREMENTS, WHICH SHALL BE IN ACCORDANCE WITH THE STANDARD SPECIFICATIONS.

EXP. JT. MAT'L. SHALL MEET THE REQUIREMENTS OF AASHTO SPECIFICATION M153 TYPE I, TYPE II, OR TYPE III.

THE 2½" Ø DOWEL HOLES AT FIXED ENDS OF SLAB SECTIONS SHALL BE FILLED WITH NON-SHRINK GROUT.

STRUCTURAL STEEL ITEMS SHALL BE OF A GRADE CONFORMING TO EITHER ASTM A36 OR A373, EXCEPT HIGH STRENGTH BOLTS. HIGH STRENGTH BOLTS SHALL BE ASTM A325. ALL STRUCTURAL STEEL EXCEPT PILE CAP PLATES SHALL BE GALVANIZED AS PER THE SPECIFICATIONS.

ALL MATERIAL AND WORKMANSHIP SHALL COMPLY WITH THE APPLICABLE REQUIREMENTS OF THE STANDARD SPECIFICATIONS FOR ROADS AND STRUCTURES OF THE NC DEPARTMENT OF TRANSPORTATION DATED JULY 2012 AND THE SPECIAL PROVISIONS.

WHEN CORED SLABS ARE CAST, AN INTERNAL HOLD-DOWN SYSTEM SHALL BE EMPLOYED TO PREVENT VOIDS FROM RISING OR MOVING SIDEWAYS. AT LEAST SIX WEEKS PRIOR TO CASTING CORED SLABS, THE CONTRACTOR SHALL SUBMIT TO THE ENGINEER FOR REVIEW AND COMMENT, DETAILED DRAWINGS OF THE PROPOSED HOLD-DOWN SYSTEM. IN ADDITION TO THE STRUCTURAL DETAILS, LOCATION AND SPACING OF THE HOLD-DOWNS SHALL BE INDICATED.

UNLESS OTHERWISE NOTED ON PLANS, ALL EXPOSED CORNERS ON STRUCTURES SHALL BE CHAMFERED ¾".

ALL REINFORCING STEEL CAST WITH THE CORED SLAB SECTIONS SHALL BE GRADE 60 AND SHALL BE INCLUDED IN THE UNIT PRICE BID FOR PRESTRESSED CONCRETE CORED SLABS.

PRESTRESSING STRANDS SHALL BE CUT FLUSH WITH THE CORED SLAB UNIT ENDS.

TRANSVERSE POST TENSIONING OF THE CORED SLAB UNITS SHALL BE DONE IN ACCORDANCE WITH THE STANDARD SPECIFICATIONS.

FOR GROUT FOR STRUCTURES, SEE SPECIAL PROVISIONS.

PROJECT NO. B-4249
ROBESON COUNTY
STATION: 15+50.13 -L-

STATE OF NORTH CAROLINA
DEPARTMENT OF TRANSPORTATION
RALEIGH

CORED SLAB DETAILS
60' SPAN
30' CL. ROADWAY 90° SKEW

260 TOWN HALL DR
SUITE C
MORRISVILLE, NC 27560
T 919.380.8750
F 919.380.8752
www.stewart-eng.com
STEWART

NORTH CAROLINA PROFESSIONAL SEAL 11725 ENGINEER DAVID R. RUGGLES
3-12-12

REVISIONS						SHEET NO.
NO.	BY:	DATE:	NO.	BY:	DATE:	TOTAL SHEETS
1			3			
2			4			

DWG. 8 OF 15

DRAWN BY: R.C. NELSON DATE: 6-11
CHECKED BY: C.P. LEWIS DATE: 6-11

$$$$SYSTIME$$$$
$$$$CONS$$$$
$$$$USERNAME$$$$

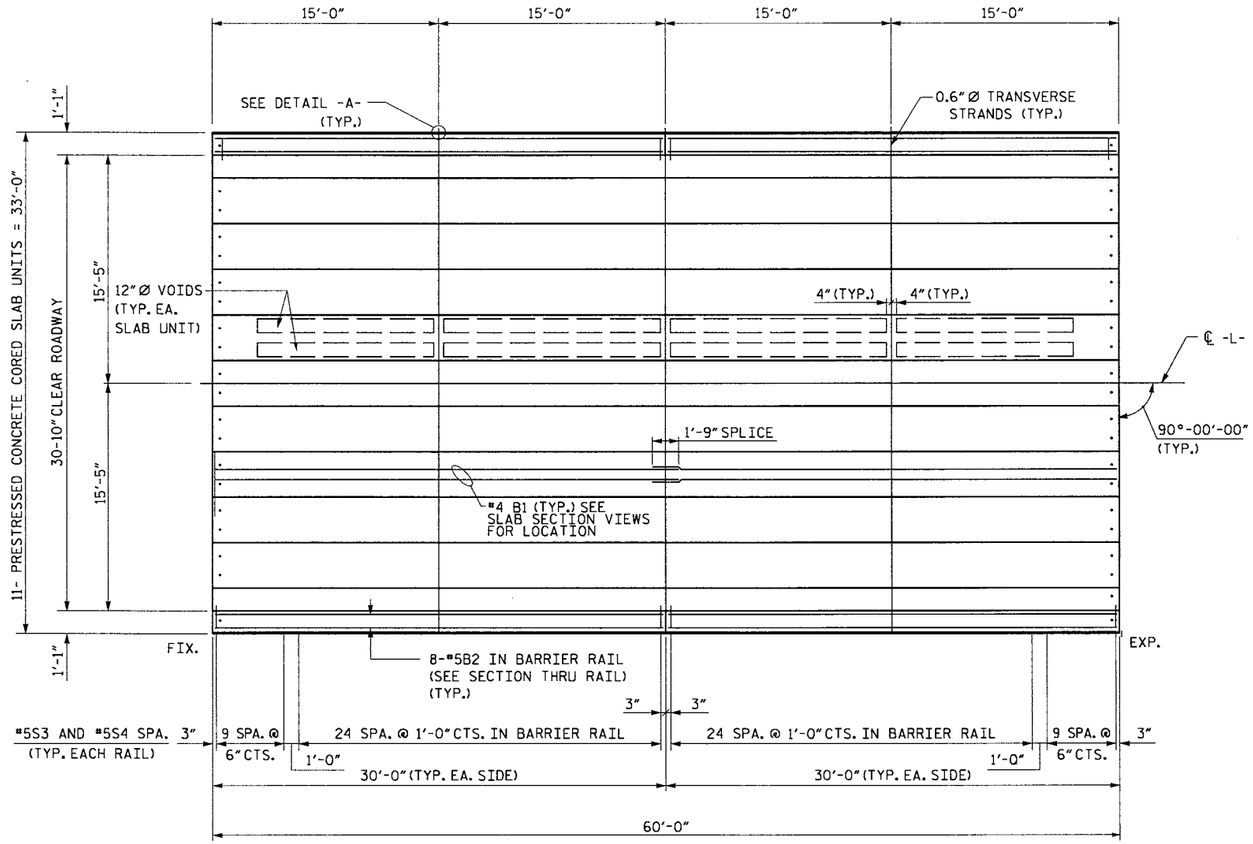

SPAN A

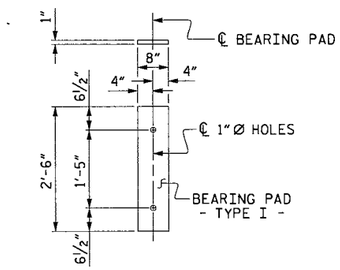

FIXED & EXP. END
(TYPE I - 22 REQ'D)

ELASTOMERIC BEARING DETAILS

ELASTOMER IN ALL BEARINGS SHALL BE 50 DUROMETER HARDNESS.

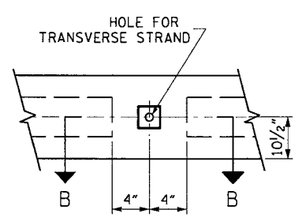

ELEVATION

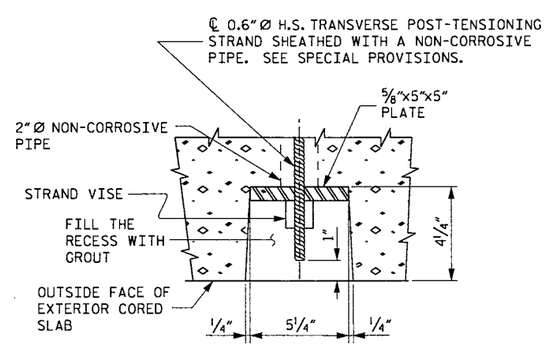

SECTION B-B

DETAIL -A-

NOT TO SCALE

PROJECT NO. B-4249
ROBESON COUNTY
STATION: 15+50.13 -L-

STATE OF NORTH CAROLINA
DEPARTMENT OF TRANSPORTATION
RALEIGH

SUPERSTRUCTURE
PLAN OF SPAN
AND DETAILS

260 TOWN HALL DR
SUITE C
MORRISVILLE, NC 27560
T 919.380.8750
F 919.380.8752
www.stewart-eng.com
STEWART

NORTH CAROLINA PROFESSIONAL SEAL 11125 ENGINEER DAVID R. RUGGLES
3-12-12

REVISIONS						SHEET NO.
NO.	BY:	DATE:	NO.	BY:	DATE:	TOTAL SHEETS
1			3			
2			4			

DWG. 9 OF 15

DRAWN BY: A. P. TUAZAMA DATE : 6-11
CHECKED BY: C.P. LEWIS DATE : 6-11

$$$$SYSTIME$$$$
$$$$USERNAME$$$$ $$$$DGN$$$$

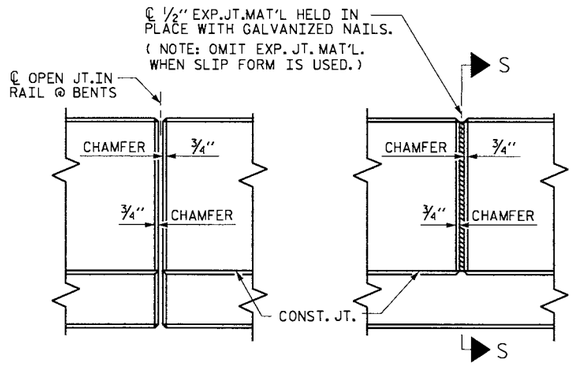

ELEVATION AT EXPANSION JOINTS

BARRIER RAIL DETAILS

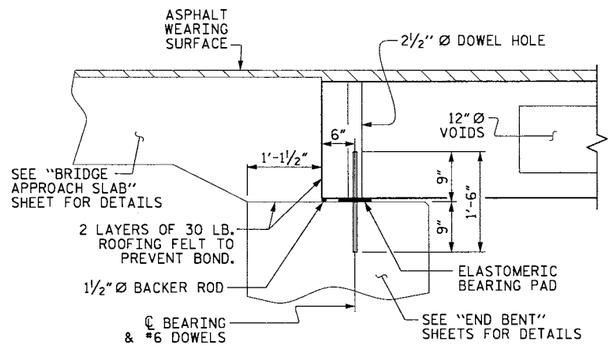

SECTION AT END BENT

NOTES

ALL REINFORCING STEEL IN BARRIER RAILS SHALL BE EPOXY COATED.

GROOVED CONTRACTION JOINTS, ½" IN DEPTH, SHALL BE TOOLED IN ALL EXPOSED FACES OF THE BARRIER RAIL AND IN ACCORDANCE WITH ARTICLE 825-10(B) OF THE STANDARD SPECIFICATIONS. THE CONTRACTION JOINT SHALL BE LOCATED AT EACH THIRD POINT BETWEEN BARRIER RAIL EXPANSION JOINTS. ONLY ONE CONTRACTION JOINT IS REQUIRED AT MIDPOINT OF BARRIER RAIL SEGMENTS LESS THAN 20 FEET IN LENGTH AND NO CONTRACTION JOINTS ARE REQUIRED FOR THOSE SEGMENTS LESS THAN 10 FEET IN LENGTH.

THE BACKER RODS SHALL CONFORM TO THE REQUIREMENTS OF TYPE M BOND BREAKER. SEE SECTION 1028 OF THE STANDARD SPECIFICATIONS.

CONCRETE CHAMFERS:
UNLESS OTHERWISE NOTED ON THE PLANS, ALL EXPOSED CORNERS ON STRUCTURES SHALL BE CHAMFERED ¾" WITH THE FOLLOWING EXCEPTIONS: TOP CORNERS OF CURBS MAY BE ROUNDED TO 1½" RADIUS WHICH IS BUILT INTO CURB FORMS; CORNERS OF TRANSVERSE FLOOR EXPANSION JOINTS SHALL BE ROUNDED WITH A ¼" FINISHING TOOL UNLESS OTHERWISE REQUIRED ON PLANS; AND CORNERS OF EXPANSION JOINTS IN THE ROADWAY FACES AND TOPS OF CURBS AND SIDEWALKS SHALL BE ROUNDED TO A ¼" RADIUS WITH A FINISHING STONE OR TOOL UNLESS OTHERWISE ON PLANS.

BAR TYPES

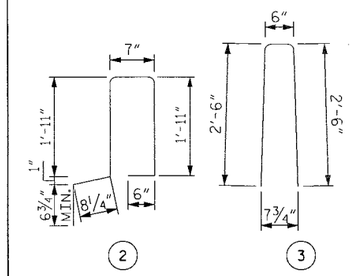

ALL BAR DIMENSIONS ARE OUT TO OUT

BILL OF MATERIAL

FOR VERTICAL CONCRETE BARRIER RAIL ONLY

BAR	NO.	SIZE	TYPE	LENGTH	WEIGHT
* B1	32	#5	STR	29'-7"	987
* S3	140	#5	2	6'-2"	900
* S4	140	#5	3	5'-6"	803

NOTE: S3 BAR IS ALSO SHOWN IN CORED SLAB BOM

* EPOXY COATED REINFORCING STEEL	2,690 LBS.
CLASS AA CONCRETE	12.6 CU. YDS.
VERTICAL CONCRETE BARRIER RAIL	120.00 LIN. FT.

CORED SLABS REQUIRED

	NUMBER	LENGTH	TOTAL LENGTH
55' UNIT			
EXTERIOR C.S.	2	60'-0"	120'-0"
INTERIOR C.S.	9	60'-0"	540'-0"
TOTAL	11		660'-0"

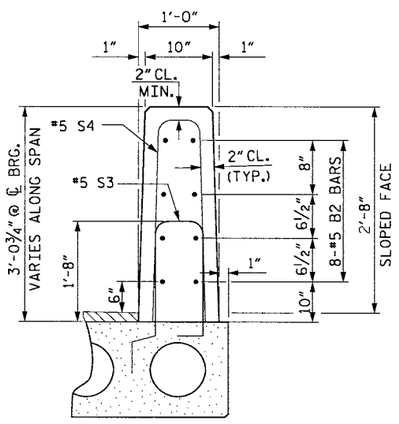

SECTION THRU RAIL

(STRAND LAYOUT NOT SHOWN)

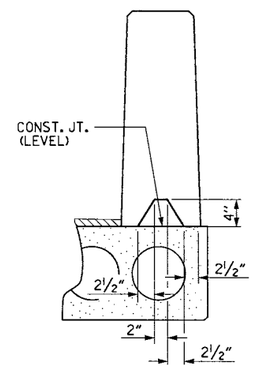

SECTION S-S

AT DAM IN OPEN JOINT
(THIS IS TO BE USED ONLY WHEN SLIP FORM IS USED)

BILL OF MATERIAL FOR ONE 60' CORED SLAB UNIT

BAR	NUMBER	SIZE	TYPE	EXTERIOR UNIT LENGTH	EXTERIOR UNIT WEIGHT	INTERIOR UNIT LENGTH	INTERIOR UNIT WEIGHT
B7	4	#4	STR	30'-9"	82	30'-9"	82
S1	16	#5	1	4'-3"	71	4'-3"	71
S2	118	#4	1	5'-4"	420	5'-4"	420
* S3	70	#5	2	6'-2"	450		
REINFORCING STEEL			LBS.		573		573
* EPOXY COATED REINFORCING STEEL			LBS.		450		
7500 P.S.I. CONCRETE			CU. YDS.		8.1		8.1
0.6" Ø L.R. STRANDS			No.		24		24

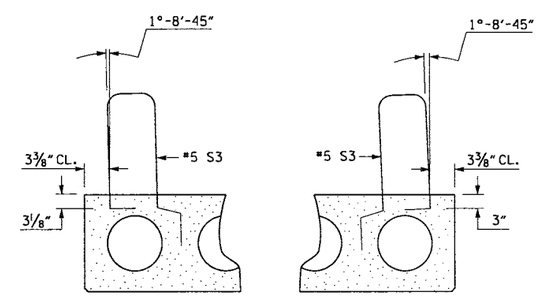

PLACEMENT OF S1 BARS

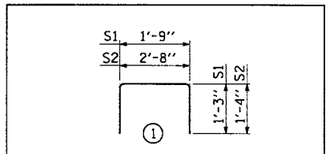

REINFORCING BAR TYPES
BAR DIMENSIONS ARE OUT TO OUT

PROJECT NO. B-4249
ROBESON COUNTY
STATION: 15+50.13 -L-

STATE OF NORTH CAROLINA
DEPARTMENT OF TRANSPORTATION
RALEIGH

CORED SLAB DETAILS

260 TOWN HALL DR
SUITE C
MORRISVILLE, NC 27560
T 919.380.8750
F 919.380.8752
www.stewart-eng.com
STEWART

NORTH CAROLINA PROFESSIONAL SEAL 11725 ENGINEER DAVID R. RUGGLES
3-12-12

DRAWN BY: A. P. TUAZAMA DATE: 6-11
CHECKED BY: C.P. LEWIS DATE: 6-11

REVISIONS						SHEET NO.
NO.	BY:	DATE:	NO.	BY:	DATE:	
1			3			TOTAL SHEETS
2			4			

DWG. 10 OF 15

$$$$$SYSTIME$$$$$
$$$$$SCENAME$$$$$

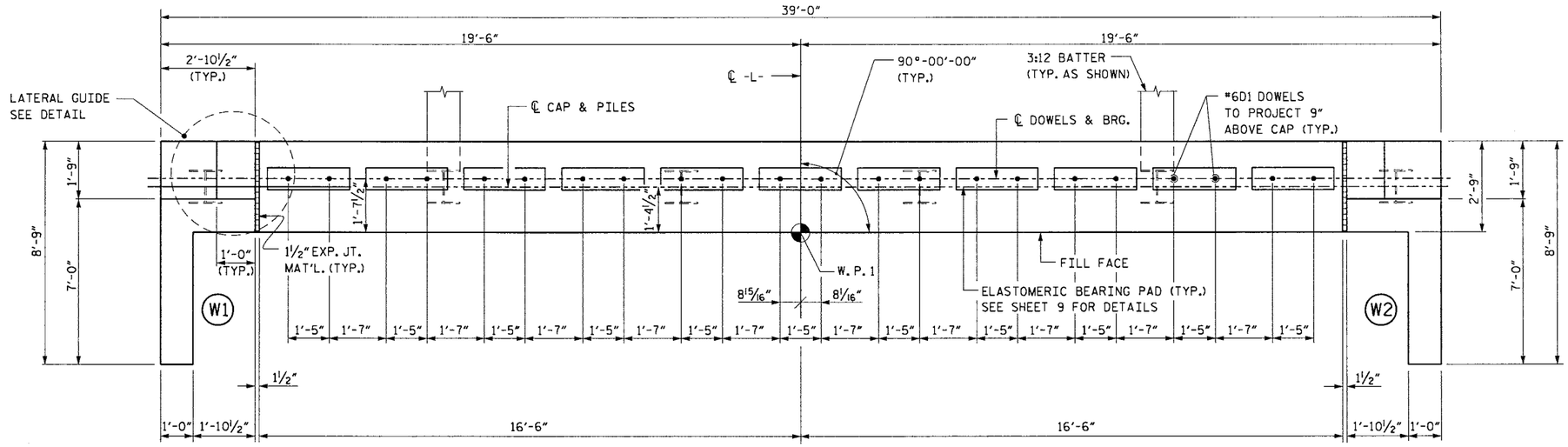

PLAN

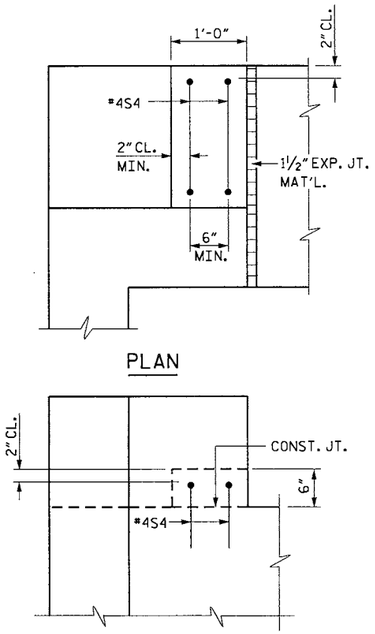

LATERAL GUIDE DETAILS

NOTES:
STIRRUPS IN CAP MAY BE SHIFTED AS NECESSARY TO CLEAR DOWELS.

THE LATERAL GUIDE AT EACH END OF THE CAP IS NOT TO BE POURED UNTIL AFTER CORED SLAB UNITS ARE IN PLACE.

THE CONTRACTOR SHALL PROVIDE FOR INSTALLATION OF THE 4" DIAMETER DRAIN PIPE THROUGH THE WING WALL AS REQUIRED FOR REINFORCED BRIDGE APPROACH FILLS, SEE THE ROADWAY PLANS. REINFORCING STEEL IN THE WING WALL MAY BE SHIFTED AS NECESSARY TO CLEAR THE DRAIN PIPE.

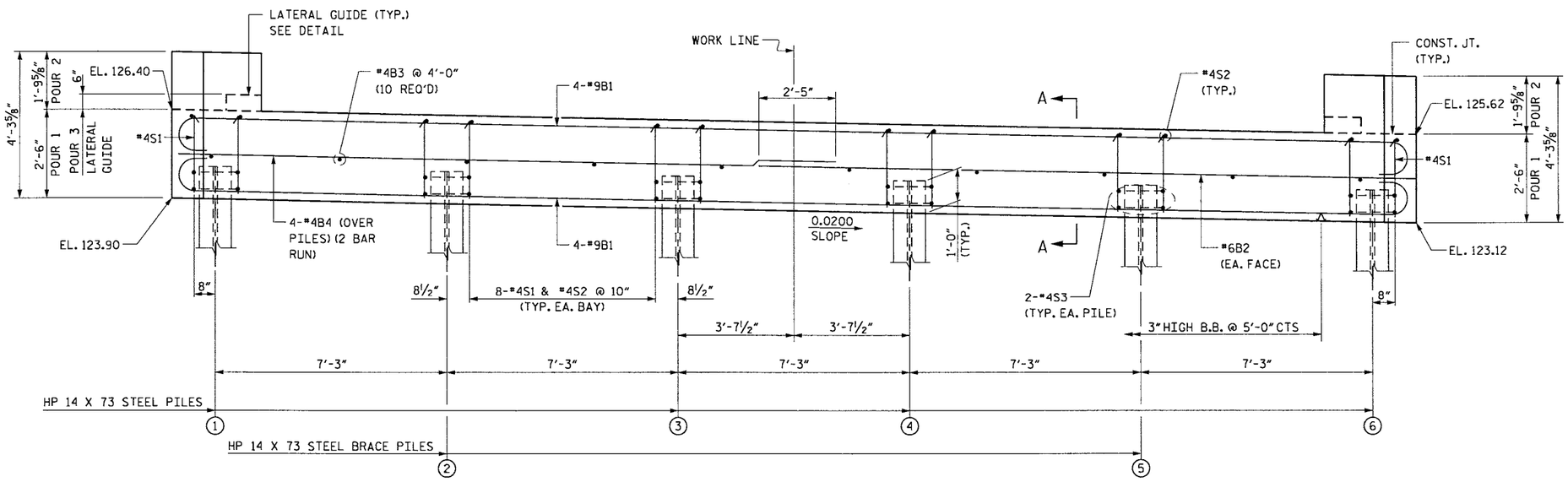

ELEVATION OF CAP

TOP OF PILE ELEVATIONS	
PILE NO.	ELEVATION
P1	124.88
P2	124.73
P3	124.59
P4	124.44
P5	124.30
P6	124.15

PROJECT NO. B-4249
ROBESON COUNTY
STATION: 15+50.13 -L-

SHEET 1 OF 2

STATE OF NORTH CAROLINA
DEPARTMENT OF TRANSPORTATION
RALEIGH

SUBSTRUCTURE
END BENT 1

260 TOWN HALL DR
SUITE C
MORRISVILLE, NC 27560
T 919.380.8750
F 919.380.8752
www.stewart-eng.com
STEWART

NORTH CAROLINA PROFESSIONAL SEAL 25934 ENGINEER
3-12-12

DRAWN BY: A. P. TUAZAMA DATE: 6-11
CHECKED BY: C.P. LEWIS DATE: 6-11

DWG. 11 OF 15

REVISIONS						SHEET NO.
NO.	BY:	DATE:	NO.	BY:	DATE:	TOTAL SHEETS
1			3			
2			4			

$$$$$$$SYSTIME$$$$$
$$$$$$$USERNAME$$$$$DGN$$$$$$$

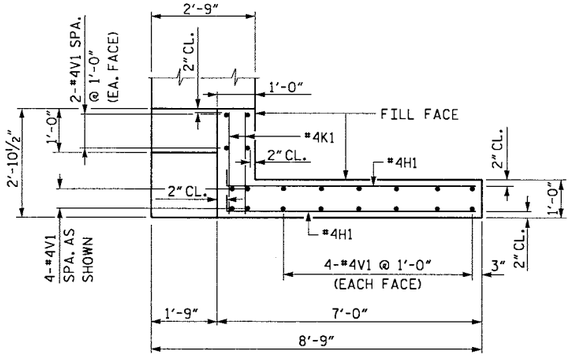

PLAN W1

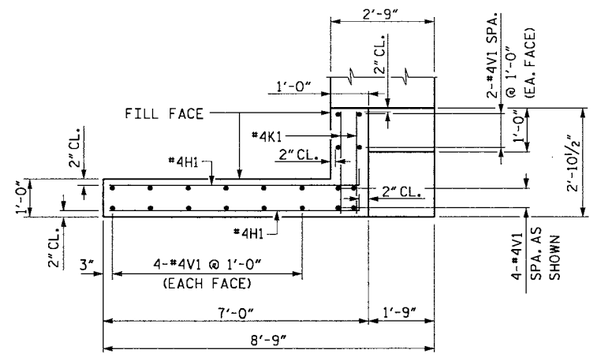

PLAN W2

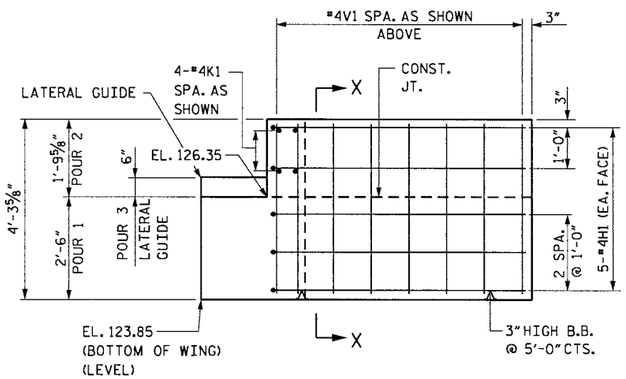

ELEVATION W1

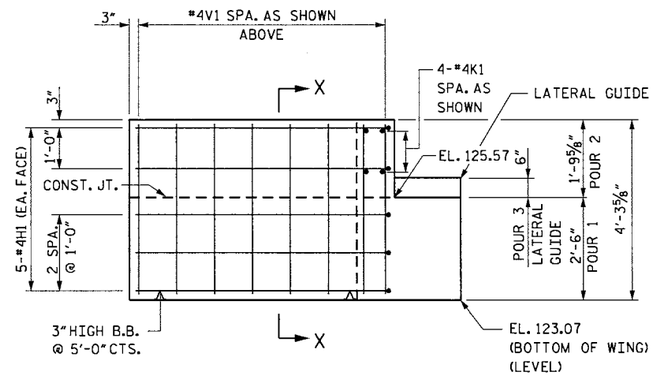

ELEVATION W2

BAR TYPES

ALL BAR DIMENSIONS ARE OUT TO OUT

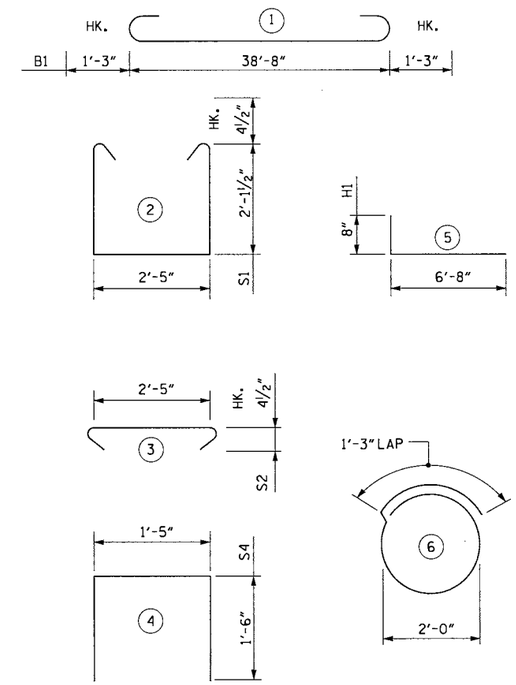

BILL OF MATERIAL

END BENT 1

BAR	NO.	SIZE	TYPE	LENGTH (ft)	WEIGHT (lb)
B1	8	#9	1	41'-2"	1,120
B2	2	#6	STR.	38'-8"	116
B3	10	#4	STR.	2'-5"	16
B4	8	#4	STR.	20'-7"	110
D1	22	#6	STR.	1'-6"	50
H1	20	#4	5	7'-4"	98
K1	8	#4	STR.	2'-6"	13
S1	42	#4	2	7'-5"	208
S2	42	#4	3	3'-2"	89
S3	12	#4	6	7'-7"	61
S4	4	#4	4	4'-5"	12
V1	40	#4	STR.	3'-10"	102

TOTAL REINFORCING STEEL = LBS	1,995
CLASS A CONCRETE	
POUR 1 (CAP & LOWER PART OF WINGS)	11.1
POUR 2 (UPPER PART OF WINGS)	1.2
POUR 3 (LATERAL GUIDE)	0.1
TOTAL CU. YARDS	12.4
HP 14 X 73 STEEL PILES NO.	6
LIN. FT.	360

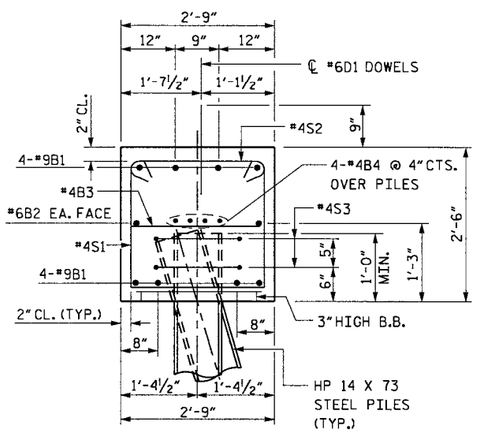

SECTION A-A

NOTE: PILE BATTER SHALL BE 3 :12

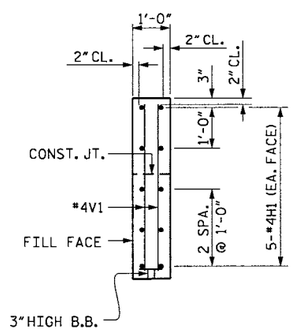

SECTION X-X

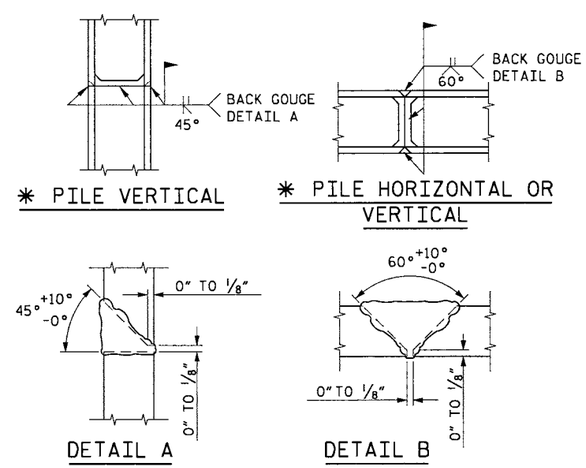

✱ PILE VERTICAL

✱ PILE HORIZONTAL OR VERTICAL

DETAIL A

DETAIL B

✱ POSITION OF PILE DURING WELDING

PILE SPLICE DETAILS

PROJECT NO. B-4249

ROBESON COUNTY

STATION: 15+50.13 -L-

SHEET 2 OF 2

STATE OF NORTH CAROLINA
DEPARTMENT OF TRANSPORTATION
RALEIGH

SUBSTRUCTURE
END BENT 1

260 TOWN HALL DR
SUITE C
MORRISVILLE, NC 27560
T 919.380.8750
F 919.380.8752
www.stewart-eng.com
STEWART

NORTH CAROLINA PROFESSIONAL SEAL 25934 ENGINEER CHARLES P. LEWIS
3-12-12

REVISIONS						SHEET NO.
NO.	BY:	DATE:	NO.	BY:	DATE:	
1			3			TOTAL SHEETS
2			4			

DWG. 12 OF 15

DRAWN BY: A. P. TUAZAMA DATE : 6-11

CHECKED BY: C. P. LEWIS DATE : 6-11

3/9/2012
R:\Structures\B5005_00\endbent_1-2of2.dgn
USER: jacob

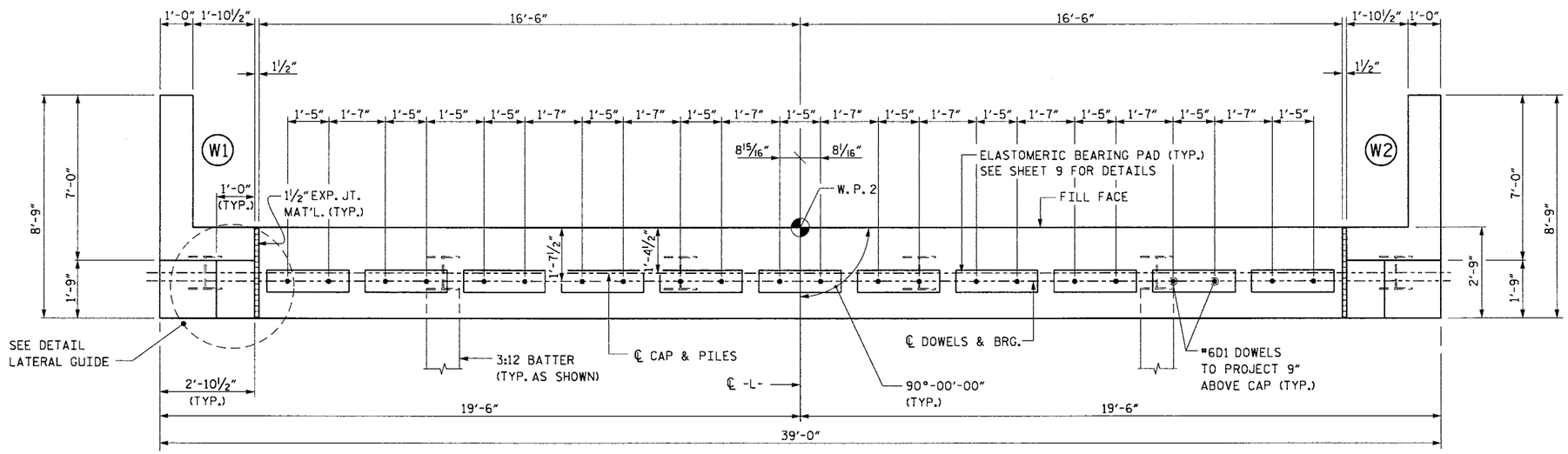

PLAN

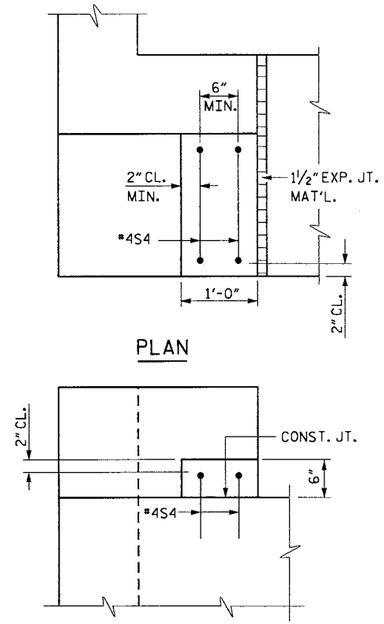

LATERAL GUIDE DETAILS

NOTES:
STIRRUPS IN CAP MAY BE SHIFTED AS NECESSARY TO CLEAR DOWELS.

THE LATERAL GUIDE AT EACH END OF THE CAP IS NOT TO BE POURED UNTIL AFTER CORED SLAB UNITS ARE IN PLACE.

THE CONTRACTOR SHALL PROVIDE FOR INSTALLATION OF THE 4" DIAMETER DRAIN PIPE THROUGH THE WING WALL AS REQUIRED FOR REINFORCED BRIDGE APPROACH FILLS, SEE THE ROADWAY PLANS. REINFORCING STEEL IN THE WING WALL MAY BE SHIFTED AS NECESSARY TO CLEAR THE DRAIN PIPE.

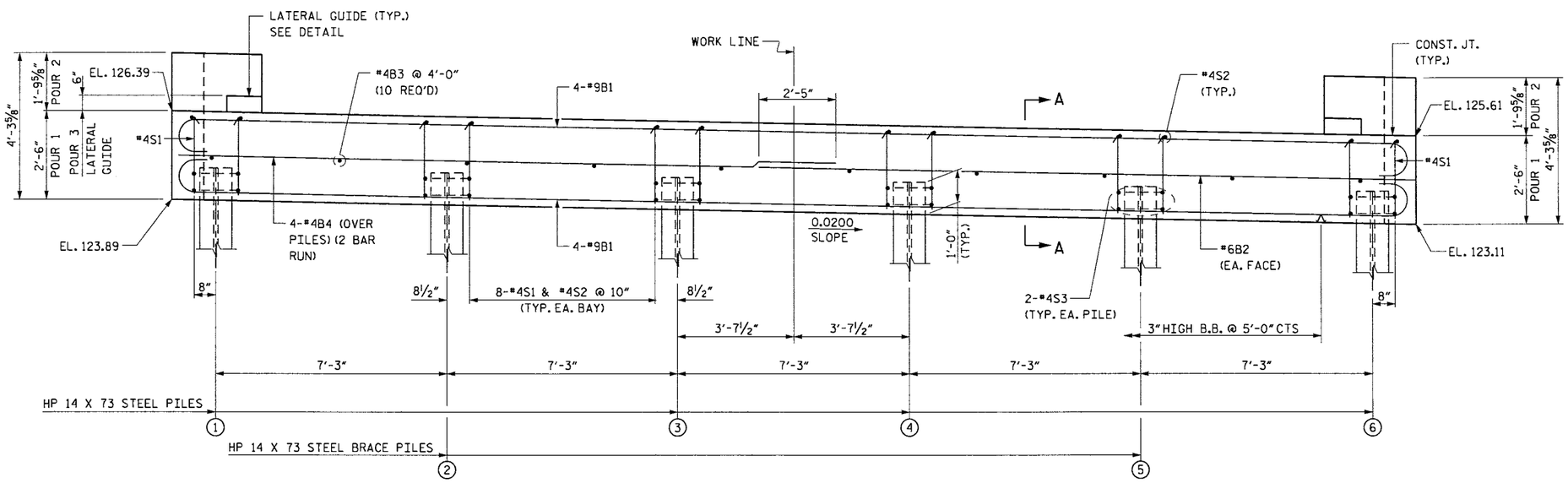

ELEVATION OF CAP

TOP OF PILE ELEVATIONS	
PILE NO.	ELEVATION
P1	124.87
P2	124.73
P3	124.58
P4	124.44
P5	124.29
P6	124.15

PROJECT NO. B-4249
ROBESON COUNTY
STATION: 15+50.13 -L-

SHEET 1 OF 2

STATE OF NORTH CAROLINA
DEPARTMENT OF TRANSPORTATION
RALEIGH

SUBSTRUCTURE
END BENT 2

260 TOWN HALL DR
SUITE C
MORRISVILLE, NC 27560
T 919.380.8750
F 919.380.8752
www.stewart-eng.com
STEWART

NORTH CAROLINA PROFESSIONAL SEAL 25934 ENGINEER
3-12-12

DWG. 13 OF 15

REVISIONS						SHEET NO.
NO.	BY:	DATE:	NO.	BY:	DATE:	TOTAL SHEETS
1			3			
2			4			

DRAWN BY: A. P. TUAZAMA DATE : 6-11
CHECKED BY: C.P. LEWIS DATE : 6-11

$$$$$$SYSTIME$$$$$$
$$$$$$

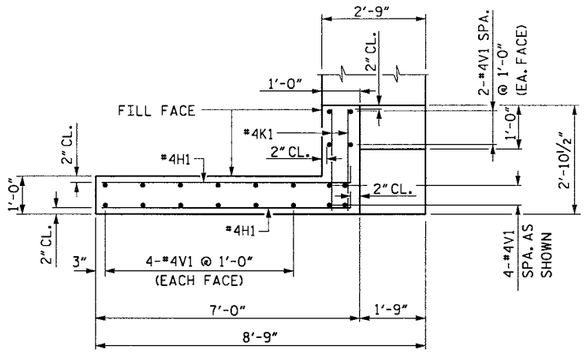

PLAN W1

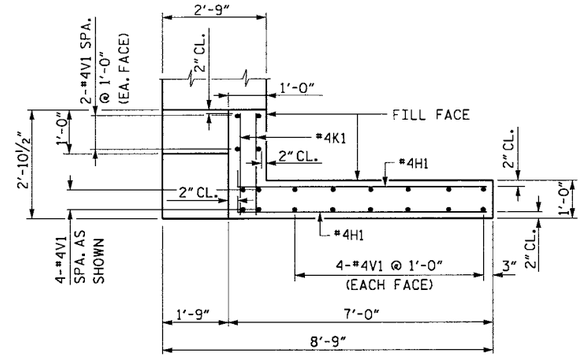

PLAN W2

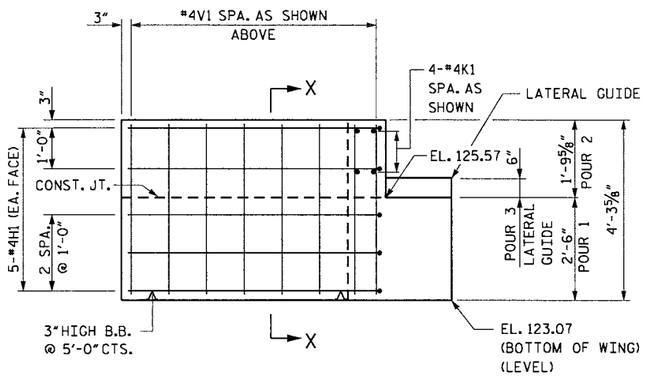

ELEVATION W1

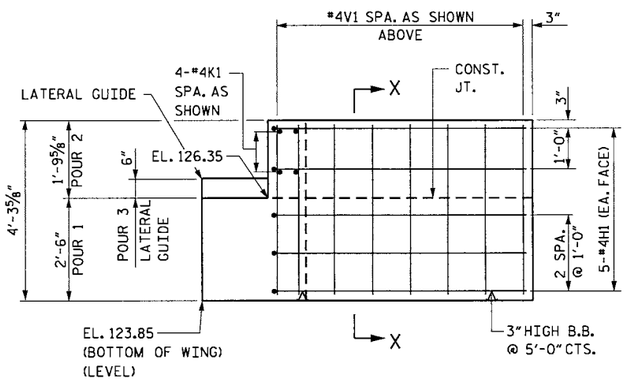

ELEVATION W2

BAR TYPES

ALL BAR DIMENSIONS ARE OUT TO OUT

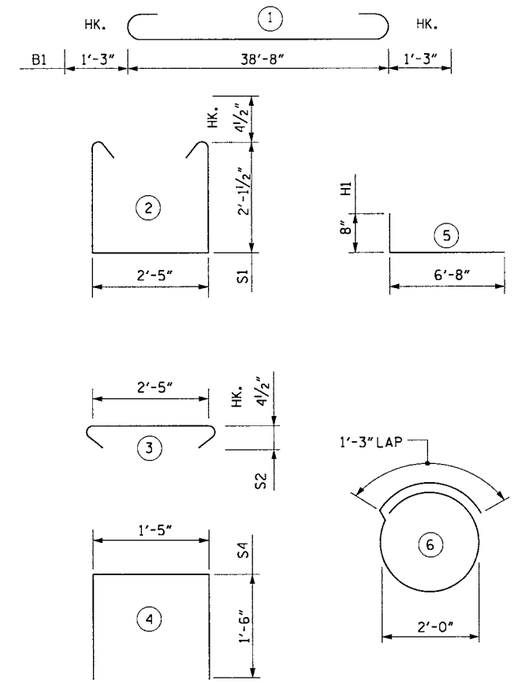

BILL OF MATERIAL

END BENT 2

BAR	NO.	SIZE	TYPE	LENGTH (ft)	WEIGHT (lb)
B1	8	#9	1	41'-2"	1,120
B2	2	#6	STR.	38'-8"	116
B3	10	#4	STR.	2'-5"	16
B4	8	#4	STR.	20'-7"	110
D1	22	#6	STR.	1'-6"	50
H1	20	#4	5	7'-4"	98
K1	8	#4	STR.	2'-6"	13
S1	42	#4	2	7'-5"	208
S2	42	#4	3	3'-2"	89
S3	12	#4	6	7'-7"	61
S4	4	#4	4	4'-5"	12
V1	40	#4	STR.	3'-10"	102
TOTAL REINFORCING STEEL = LBS					1,995
CLASS A CONCRETE					
POUR 1 (CAP & LOWER PART OF WINGS)					11.1
POUR 2 (UPPER PART OF WINGS)					1.2
POUR 3 (LATERAL GUIDE)					0.1
TOTAL CU. YARDS					12.4
HP 14 X 73 STEEL PILES NO.					6
LIN. FT.					450

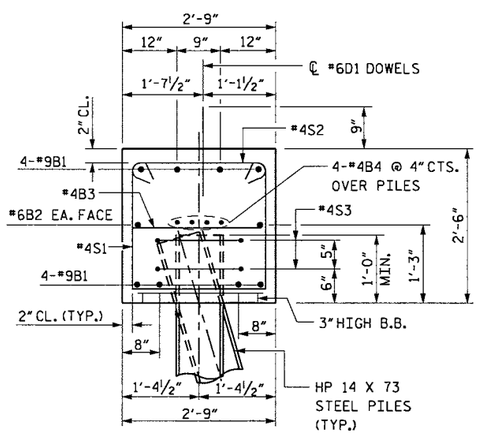

SECTION A-A

NOTE: PILE BATTER SHALL BE 3 :12

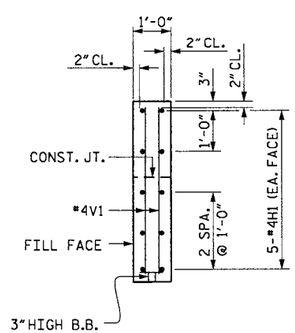

SECTION X-X

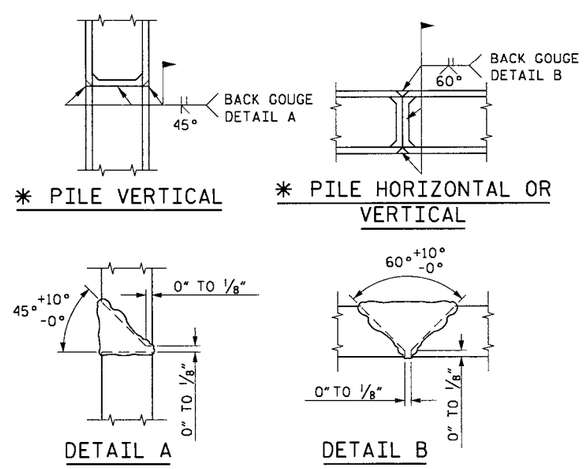

✱ PILE VERTICAL

✱ PILE HORIZONTAL OR VERTICAL

DETAIL A

DETAIL B

✱ POSITION OF PILE DURING WELDING

PILE SPLICE DETAILS

PROJECT NO. B-4249

ROBESON COUNTY

STATION: 15+50.13 -L-

SHEET 2 OF 2

STATE OF NORTH CAROLINA
DEPARTMENT OF TRANSPORTATION
RALEIGH

SUBSTRUCTURE
END BENT 2

260 TOWN HALL DR
SUITE C
MORRISVILLE, NC 27560
T 919.380.8750
F 919.380.8752
www.stewart-eng.com
STEWART

NORTH CAROLINA PROFESSIONAL SEAL 25934 ENGINEER CHARLES P. LEWIS

3-12-12

DWG. 14 OF 15

REVISIONS						SHEET NO.
NO.	BY:	DATE:	NO.	BY:	DATE:	TOTAL SHEETS
1			3			
2			4			

DRAWN BY: A. P. TUAZAMA DATE : 6-11

CHECKED BY: C. P. LEWIS DATE : 6-11

3/9/2012
11:14:15
U:\STP_Bridge\B-5005.00\endbent 2-2of2.dgn

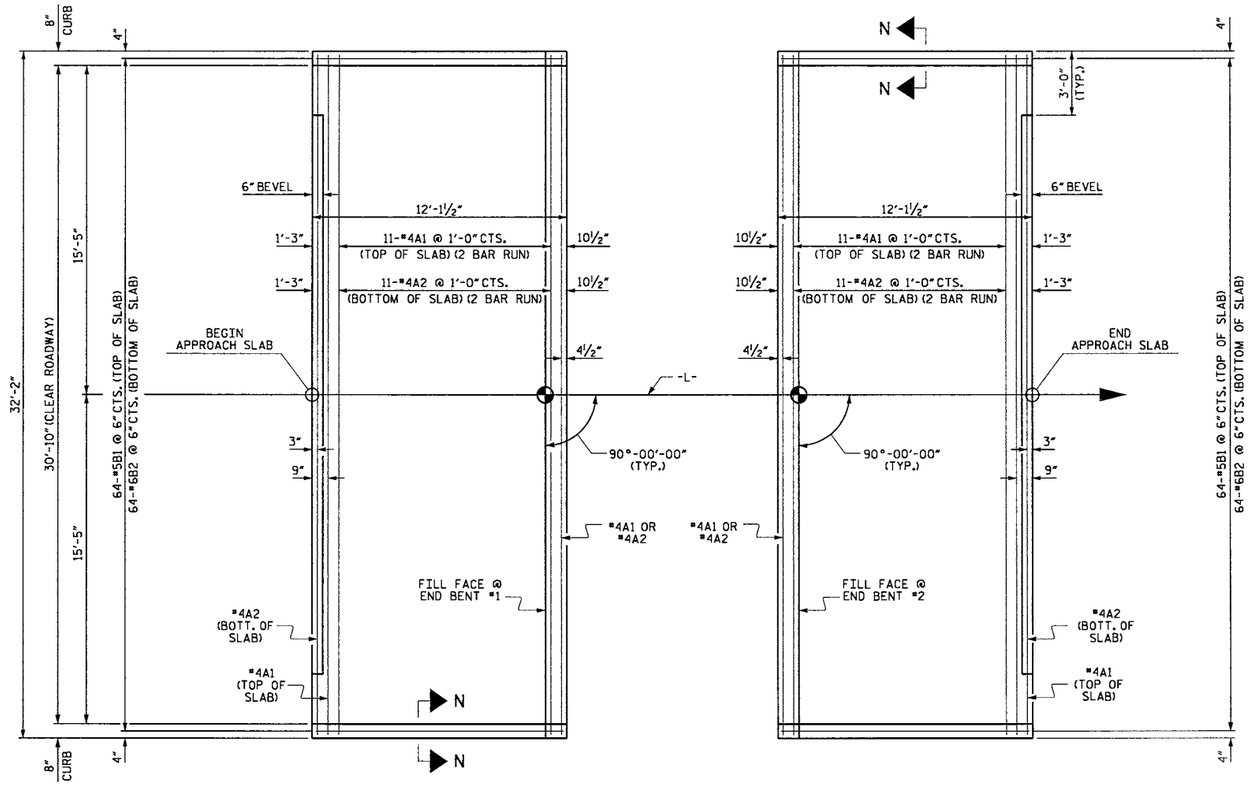

PLAN @ END BENT #1

PLAN @ END BENT #2

DIMENSIONS SHOWN ARE TYPICAL FOR BOTH APPROACH SLABS

NOTES

FOR BRIDGE APPROACH FILL INCLUDING GEOTEXTILE, 4"Ø DRAINAGE PIPE, AND #78M STONE BACKFILL, SEE ROADWAY PLANS.

GEOTEXTILE SHALL BE TYPE 1 IN ACCORDANCE WITH THE STANDARD SPECIFICATIONS SECTION 1056.

#78M STONE BACKFILL (CLASS V SELECT MATERIAL) SHALL BE IN ACCORDANCE WITH STANDARD SPECIFICATIONS SECTION 1016.

#78M STONE BACKFILL IS TO BE CONTINUOUS ALONG FILL FACE OF BACKWALL FROM OUTSIDE EDGE TO OUTSIDE EDGE OF APPROACH SLAB.

FOR THE 4"Ø DRAINAGE PIPE OUTLET(S), SEE ROADWAY STANDARD DRAWINGS.

AREA BETWEEN THE WINGWALL AND APPROACH SLAB SHALL BE GRADED TO DRAIN THE WATER AWAY FROM THE FILL FACE OF THE BRIDGE AND SHALL BE PAVED. SEE ROADWAY PLANS.

APPROACH SLAB GROOVING IS NOT REQUIRED.

BILL OF MATERIAL

APPROACH SLAB AT EB #1

BAR	NO.	SIZE	TYPE	LENGTH	WEIGHT
* A1	26	#4	STR	16'-11"	294
A2	26	#4	STR	16'-9"	291
* B1	64	#5	STR	11'-2"	745
B2	64	#6	STR	11'-8"	1121
REINFORCING STEEL				LBS.	1412
* EPOXY COATED REINFORCING STEEL				LBS.	1039
CLASS AA CONCRETE				C. Y.	18.6

APPROACH SLAB AT EB #2

BAR	NO.	SIZE	TYPE	LENGTH	WEIGHT
* A1	26	#4	STR	16'-11"	294
A2	26	#4	STR	16'-9"	291
* B1	64	#5	STR	11'-2"	745
B2	64	#6	STR	11'-8"	1121
REINFORCING STEEL				LBS.	1412
* EPOXY COATED REINFORCING STEEL				LBS.	1039
CLASS AA CONCRETE				C. Y.	18.6

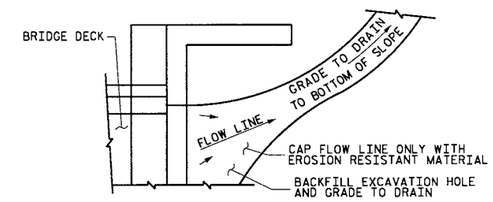

NOTE: IF THE APPROACH SLAB IS NOT CONSTRUCTED IMMEDIATELY AFTER THE BACKFILLING OF THE END BENT EXCAVATION, GRADE TO DRAIN TO THE BOTTOM OF THE SLOPE AND PROVIDE EROSION RESISTANT MATERIAL, SUCH AS FIBERGLASS ROVING OR AS DIRECTED BY THE ENGINEER TO PREVENT SOIL EROSION AND TO PROTECT THE AREA ADJACENT TO THE STRUCTURE. THE CONTRACTOR WILL BE REQUIRED TO REMOVE THESE MATERIALS PRIOR TO CONSTRUCTION OF THE APPROACH SLAB.

TEMPORARY DRAINAGE DETAIL

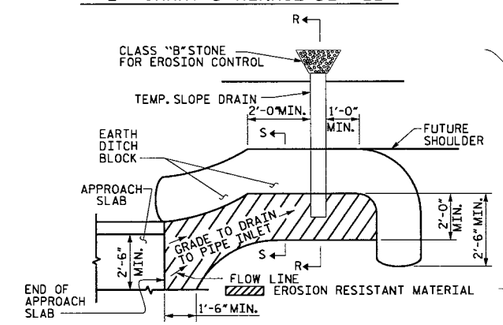

NOTE: IMMEDIATELY AFTER THE CONSTRUCTION OF THE APPROACH SLAB, THE CONTRACTOR SHALL PROVIDE TEMPORARY BERM AND SLOPE DRAIN. CONTRACTOR SHALL GRADE TO PIPE INLET AND PROVIDE EROSION RESISTANT MATERIAL AS SHOWN. THE EROSION RESISTANT MATERIAL SHALL BE EITHER 1) ASPHALT PLANT MIX, TYPE 1 OR TYPE 2, MIN. 2" DEPTH, 2) EROSION CONTROL MAT, OR 3) CONCRETE, AS DIRECTED BY THE ENGINEER. THE SLOPE DRAIN SHALL CONSIST OF A NON-PERFORATED TEMPORARY DRAINAGE PIPE, 12 INCHES IN DIAMETER.

PLAN VIEW

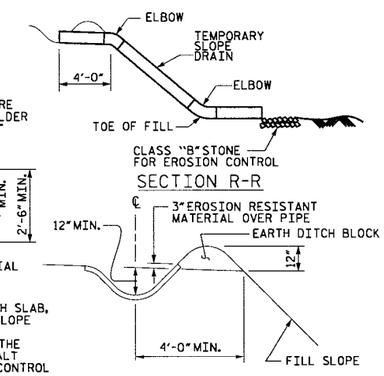

SECTION R-R

SECTION S-S

TEMPORARY BERM AND SLOPE DRAIN DETAILS

(TO BE USED WHEN SHOULDER BERM GUTTER IS REQUIRED)

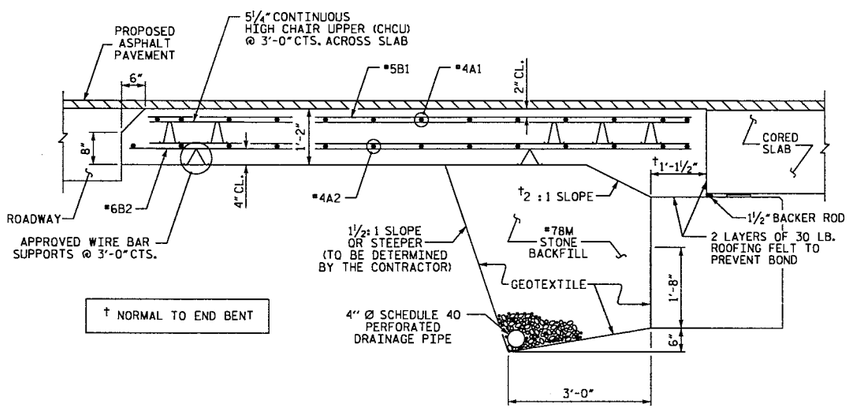

† NORMAL TO END BENT

SECTION THRU SLAB

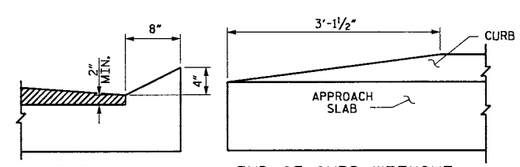

SECTION N-N

END OF CURB WITHOUT SHOULDER BERM GUTTER

CURB DETAILS

PROJECT NO. B-4249

ROBESON COUNTY

STATION: 15+50.13 -L-

SPLICE LENGTHS		
BAR SIZE	EPOXY COATED	UNCOATED
#4	2'-0"	1'-9"
#5	2'-6"	2'-2"
#6	3'-10"	2'-7"

260 TOWN HALL DR
SUITE C
MORRISVILLE, NC 27560
T 919.380.8750
F 919.380.8752
www.stewart-eng.com
STEWART

NORTH CAROLINA PROFESSIONAL SEAL 11725 ENGINEER DAVID R. RUGGLES

3-12-12

DWG. 15 OF 15

STATE OF NORTH CAROLINA
DEPARTMENT OF TRANSPORTATION
RALEIGH

STANDARD
BRIDGE APPROACH SLAB
FOR PRESTRESSED CONCRETE
CORED SLAB UNIT
(SUB-REGIONAL TIER)
90° SKEW

REVISIONS						SHEET NO.
NO.	BY:	DATE:	NO.	BY:	DATE:	TOTAL SHEETS
1			3			
2			4			

ASSEMBLED BY :	PLJ	DATE :	3-12
CHECKED BY :	DRR	DATE :	3-12
DRAWN BY : SHS/MAA 5-09	REV. 12-11	MAA/AAC	
CHECKED BY : BCH 5-09			

$$$$$$SYSTIME$$$$$

TIP PROJECT: B-4249

T.I.P. NO.	SHEET NO.
B-4249	UC-1

STATE OF NORTH CAROLINA
DIVISION OF HIGHWAYS

UTILITY CONSTRUCTION PLANS
ROBESON COUNTY

LOCATION: BRIDGE NO. 143 OVER ASHPOLE SWAMP ON SR 1146 (PURVIS ROAD) BETWEEN SR 1148 (BRAYBOY ROAD) AND SR 1144 (ADAMS ROAD)

TYPE OF WORK: BRIDGE REPLACEMENT, GRADING, PAVING, DRAINAGE, GUARDRAIL, AND UTILITY CONSTRUCTION

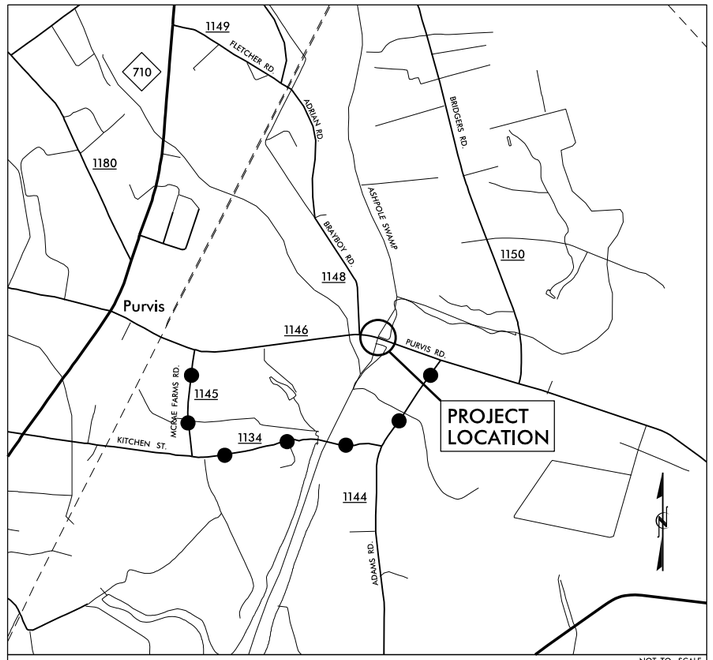

VICINITY MAP

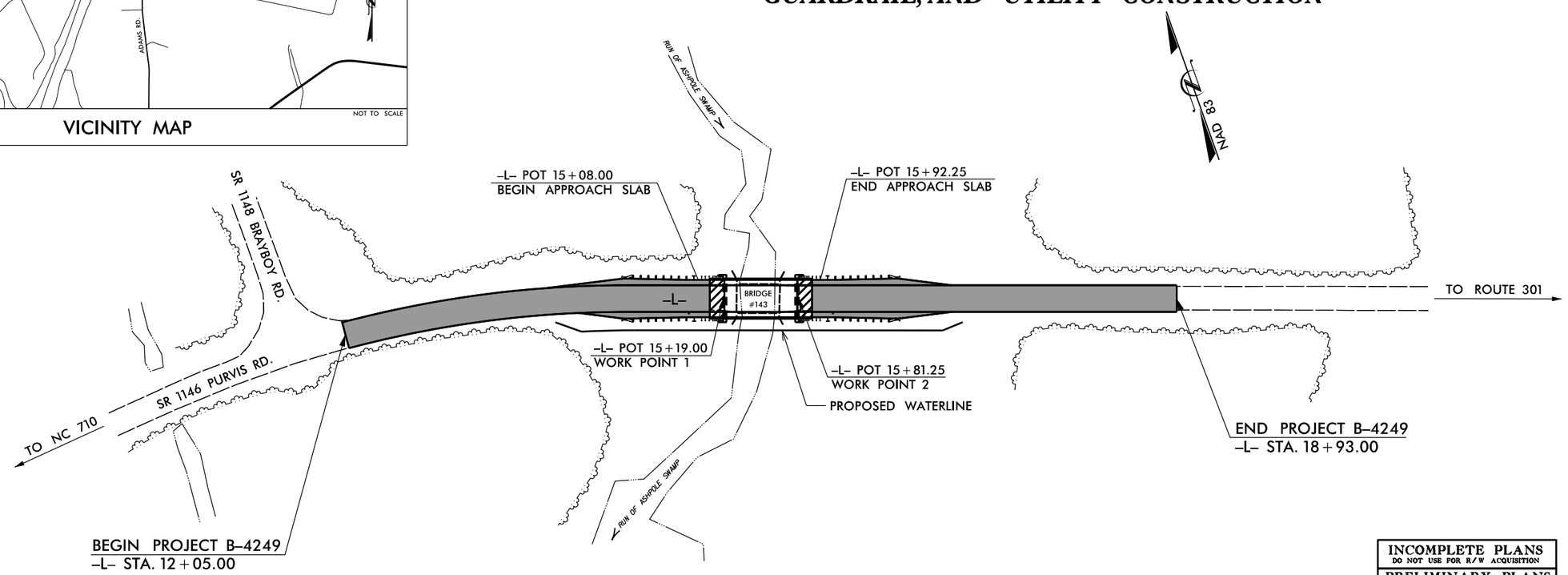

INCOMPLETE PLANS
DO NOT USE FOR R/W ACQUISITION

PRELIMINARY PLANS
DO NOT USE FOR CONSTRUCTION

GRAPHIC SCALES

50 25 0 50 100
PLANS

50 25 0 50 100
PROFILE (HORIZONTAL)

10 5 0 10 20
PROFILE (VERTICAL)

INDEX OF SHEETS

SHEET NO.	DESCRIPTION
UC-1	TITLE SHEET
UC-2	UTILITY CONSTRUCTION PLAN SHEETS
UC-3	PROFILE SHEET
UC-4	DETAILS SHEET

WATER AND SEWER OWNERS ON PROJECT

(1) ROBESON COUNTY

SEAL

NORTH CAROLINA PROFESSIONAL SEAL 32606 ENGINEER BENJAMIN R. CRAWFORD
3/15/12

STEWART
431 FAYETTEVILLE ST
SUITE 400
RALEIGH, NC 27601
T 919.380.8750
F 919.380.8752
www.stewarteng.com
FIRM NO.: C-1051

Prepared in the Office of:
STEWART ENGINEERING, INC.

FOR:
NORTH CAROLINA DEPARTMENT OF TRANSPORTATION

Benjamin R. Crawford, P.E. — UTILITIES ENGINEER
Charles M. Cullipher, P.E. — UTILITIES PROJECT ENGINEER

09/08/99
3/13/2012
...\Proj\B4249_UT_ucl_tsh.dgn
USER:bcrawford

PROJECT REFERENCE NO.	SHEET NO.
B-4249	UC-2

DESIGNED BY: CMC
DRAWN BY: CMC
CHECKED BY: BRC
APPROVED BY: BRC
REVISED:

STEWART
421 FAYETTEVILLE ST
SUITE 400
RALEIGH, NC 27601
T 919.350.8750
F 919.350.8752
www.stewartengineering.com
FIRM NO.: C-1051

SEAL 32606 ENGINEER BENJAMIN T. CRAFTON 3/8/12

UTILITY CONSTRUCTION PLANS ONLY

UTILITY CONSTRUCTION

DATUM DESCRIPTION

THE LOCALIZED COORDINATE SYSTEM DEVELOPED FOR THIS PROJECT IS BASED ON THE STATE PLANE COORDINATES ESTABLISHED BY OTHERS FOR MONUMENT "GPS-1" WITH NAD 1983/2001 STATE PLANE GRID COORDINATES OF NORTHING: 304,653.61(ft) EASTING: 1,924,531.86(ft).
THE AVERAGE COMBINED GRID FACTOR USED ON THIS PROJECT (GROUND TO GRID) IS: 0.99993270.
THE N.C. LAMBERT GRID BEARING AND LOCALIZED HORIZONTAL GROUND DISTANCE FROM "GPS-1" TO -L- STATION 12+05.00 IS 1,203.20 FEET @ N83° 23' 18.58" E.
ALL LINEAR DIMENSIONS ARE LOCALIZED HORIZONTAL DISTANCES. VERTICAL DATUM USED IS NAVD 88.

-L-

PI Sta 12+50.68
△ = 24° 23' 04.5" (RT)
D = 6° 21' 58.3"
L = 383.03'
T = 194.46'
R = 900.00'

SBG = SHOULDER BERM GUTTER
DI = DROP INLET
RCP = REINFORCED CONCRETE PIPE
GRAU = GUARDRAIL ANCHOR UNIT
SAU = STRUCTURE ANCHOR UNIT

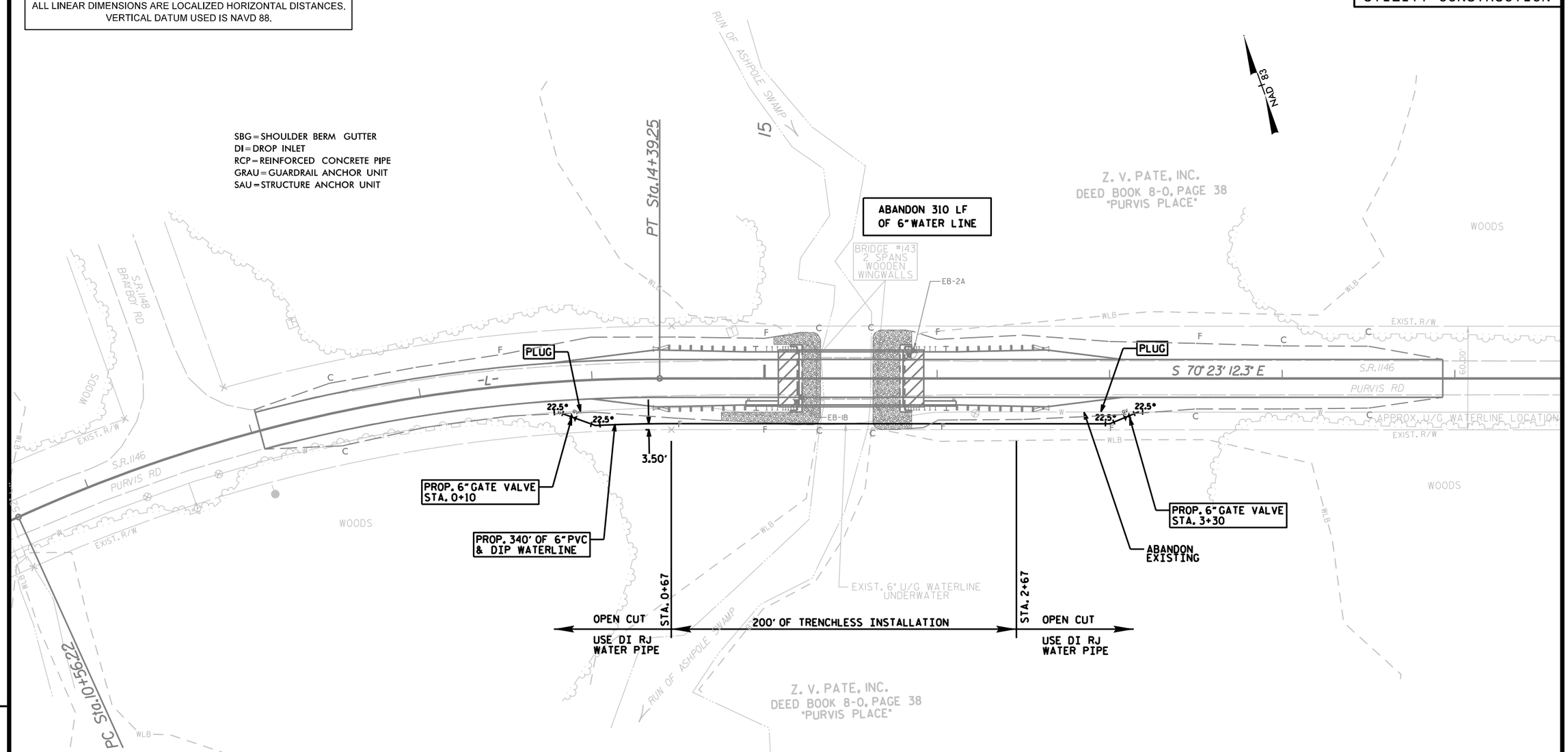

REVISIONS

8/17/99

3/13/2012
B4249_Ut_uc2_psh.dgn

PROJECT REFERENCE NO.	SHEET NO.
B-4249	UC-3

DESIGNED BY: CMC
DRAWN BY: CMC
CHECKED BY: BRC
APPROVED BY: BRC
REVISED:

STEWART
431 FAYETTEVILLE ST
SUITE 400
RALEIGH, NC 27601
T 919.380.8750
F 919.380.8752
www.stewartengineering.com
FIRM NO.: C-1251

NORTH CAROLINA PROFESSIONAL SEAL 32606 ENGINEER BENJAMIN T. CRAFTON
3/8/12

UTILITY CONSTRUCTION PLANS ONLY

UTILITY CONSTRUCTION

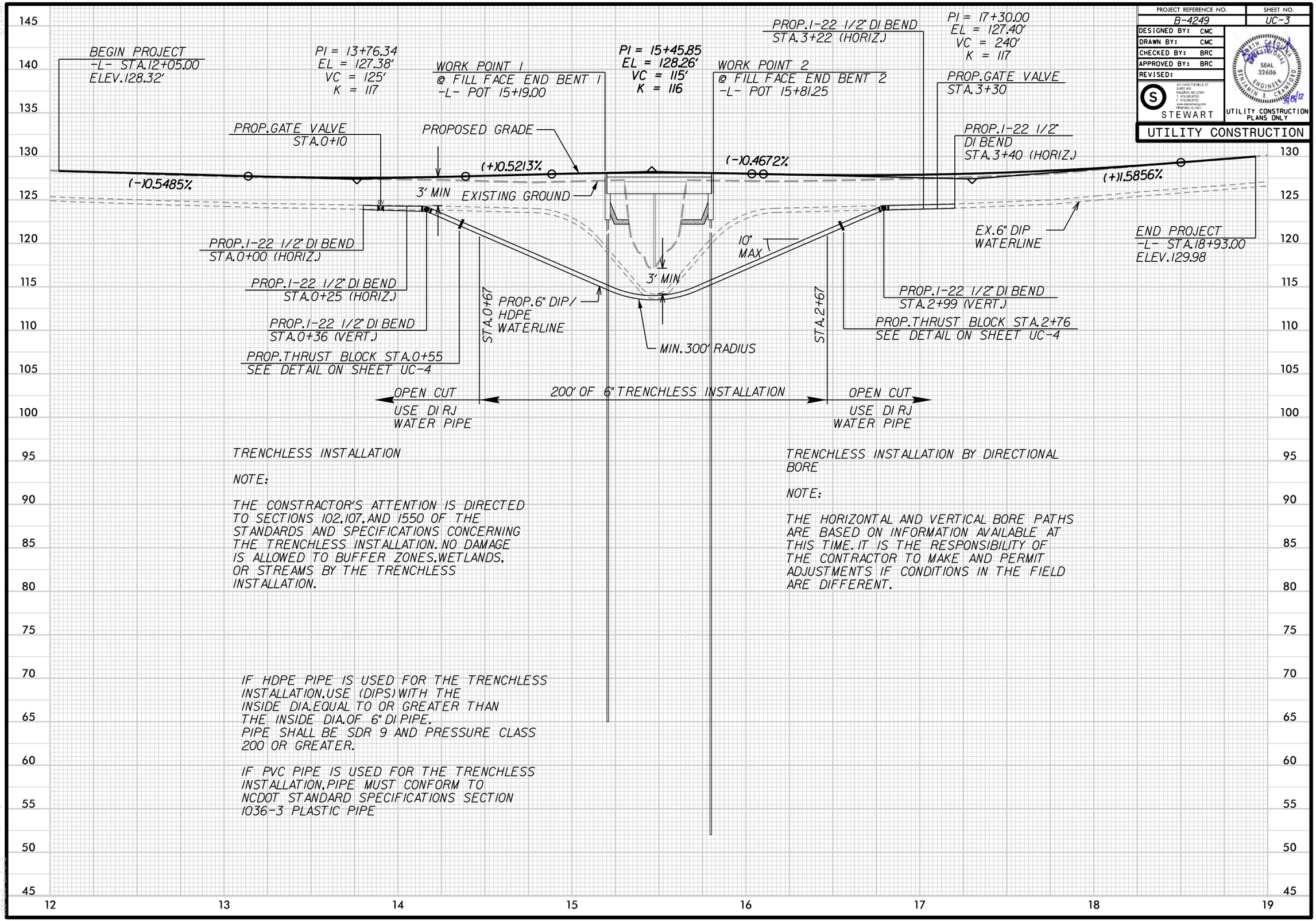

PROJECT REFERENCE NO.	SHEET NO.
B-4249	UC-4

DESIGNED BY: CMC
DRAWN BY: CMC
CHECKED BY: BRC
APPROVED BY: BRC
REVISED:

STEWART
401 FAYETTEVILLE ST
SUITE 400
RALEIGH, NC 27601
T 919.380.8750
F 919.380.8752
www.stewart-eng.com
FIRM NO.: C-1051

SEAL 32606
3/8/12
UTILITY CONSTRUCTION PLANS ONLY

UTILITY CONSTRUCTION

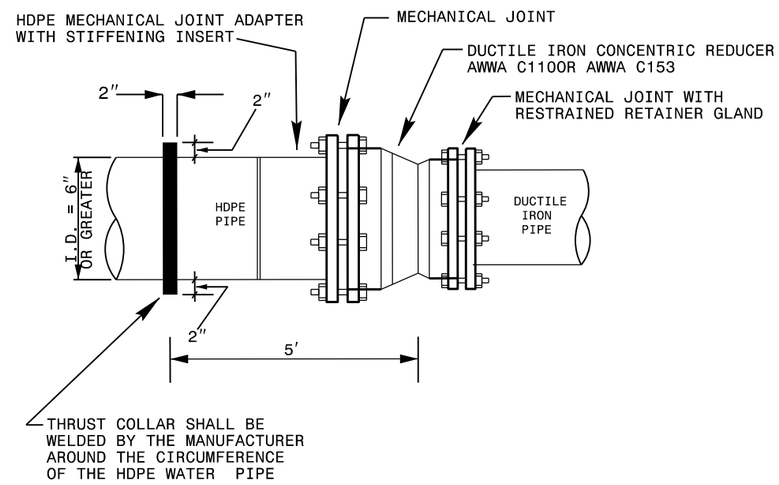

NOTE: SEE SEPARATE DETAIL FOR CONCRETE THRUST COLLAR

TRANSITION DETAIL FROM HDPE TO DI WATER PIPE

BILL OF MATERIALS

ITEM DESCRIPTION	QTY.	UNIT
ABANDON 6" WATERLINE	310	LF
TRENCHLESS INSTALL OF 6" WATERLINE	200	LF
OPEN TRENCH RESTRAINED JOINT 6" DIP WATERLINE	140	LF
PLUGS	2	EA
6" GATE VALVE	2	EA
CONCRETE THRUST COLLAR	2	EA

MAXIMUM TRENCH WIDTH
AT TOP OF PIPE

NOMINAL PIPE SIZE (INCHES)	TRENCH WIDTH (INCHES)	NOMINAL PIPE SIZE (INCHES)	TRENCH WIDTH (INCHES)
4	28	20	44
6	30	24	48
8	32	30	54
10	34	36	60
12	36	42	66
14	38	48	72
16	40	54	78
18	42		

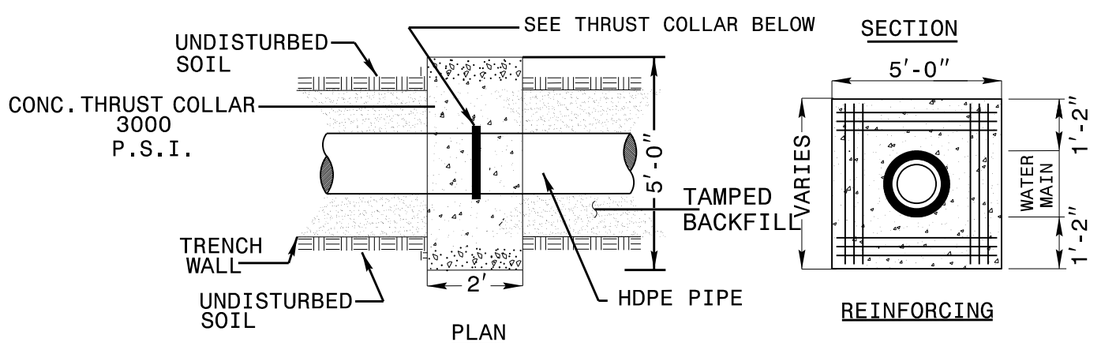

6" MAIN= 12-NO. 4 BARS
BARS PLACED AS SHOWN

NOTE: BOTTOM OF TRENCH NEEDS TO BE STABILIZED
TO SUPPORT THE WEIGHT OF THE THRUST COLLAR.

CONCRETE THRUST COLLAR DETAIL - 6" WATER LINES

TRENCH DETAIL

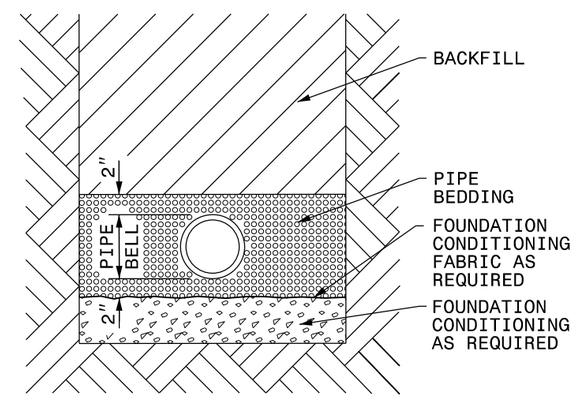

PLACE FOUNDATION CONDITIONING MATERIAL BELOW BEDDING IF REQUIRED, AS DIRECTED BY ENGINEER. PIPE BEDDED IN SELECT MATERIAL, CLASS II (TYPE 1) OR CLASS III. TRENCH BACKFILLED IN LOOSE 6" LAYERS COMPACTED TO TOP OF TRENCH USING LOCAL EXCAVATED MATERIAL IF APPROVED BY THE ENGINEER, OR SELECT MATERIAL. ALL MATERIAL SHALL BE FREE OF ROCKS, FOREIGN MATERIAL, AND FROZEN EARTH. COMPACTION SHALL BE TO APPROXIMATELY 95% DENSITY IN ACCORDANCE WITH AASHTO T-99 AS MODIFIED BY THE DEPARTMENT OF TRANSPORTATION.

5/14/99
3/13/2012
B4249_ut_uc4_details.dgn

PROJ. REFERENCE NO.	SHEET NO.
B-4249	X-1

0 2.5 5

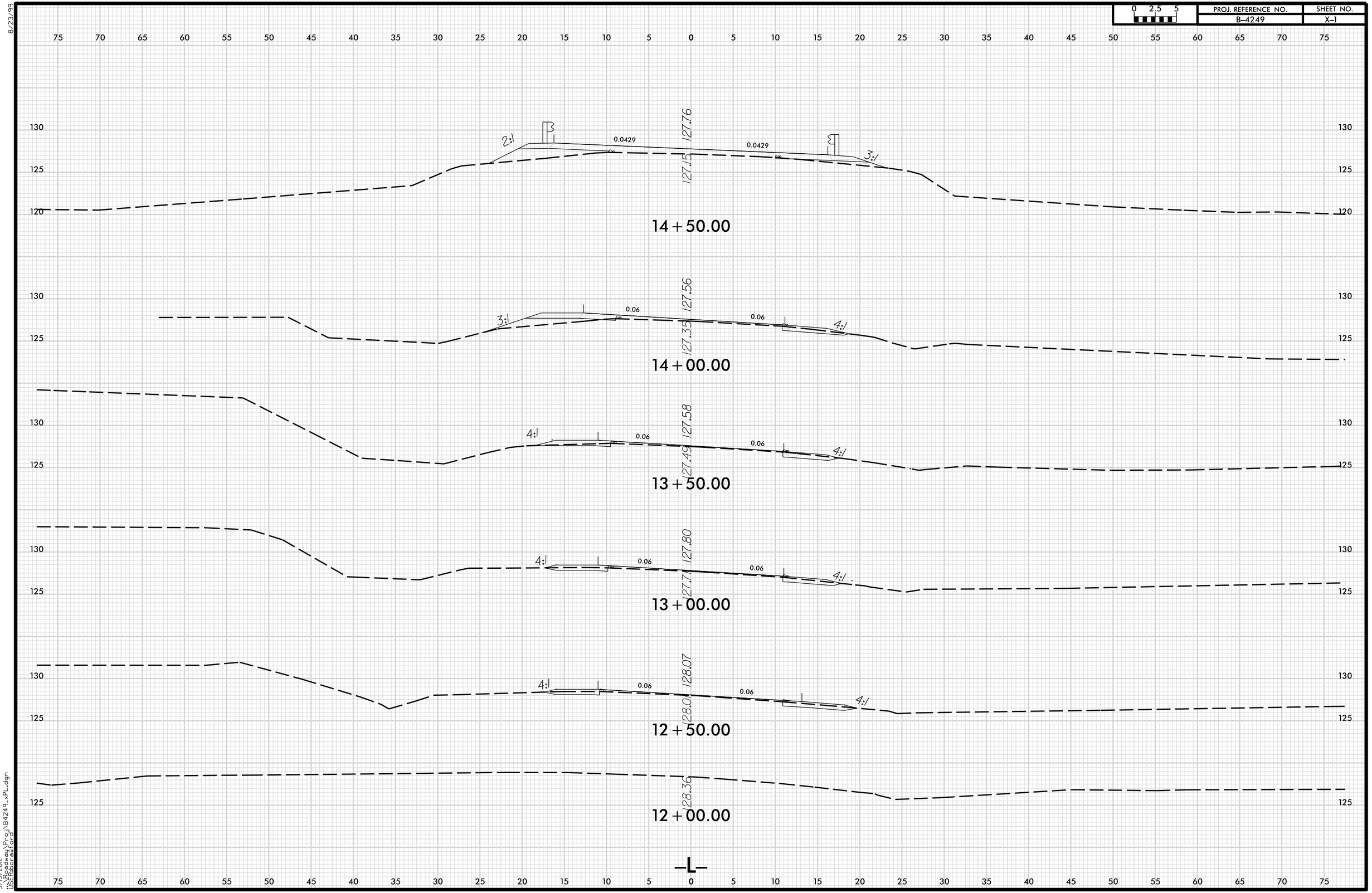

8/23/99

3/13/2012
R:\Roadway\Proj\B4249_xPL.dgn
USERbcrawford

8/23/99

0 2.5 5	PROJ. REFERENCE NO.	SHEET NO.
	B-4249	X-2

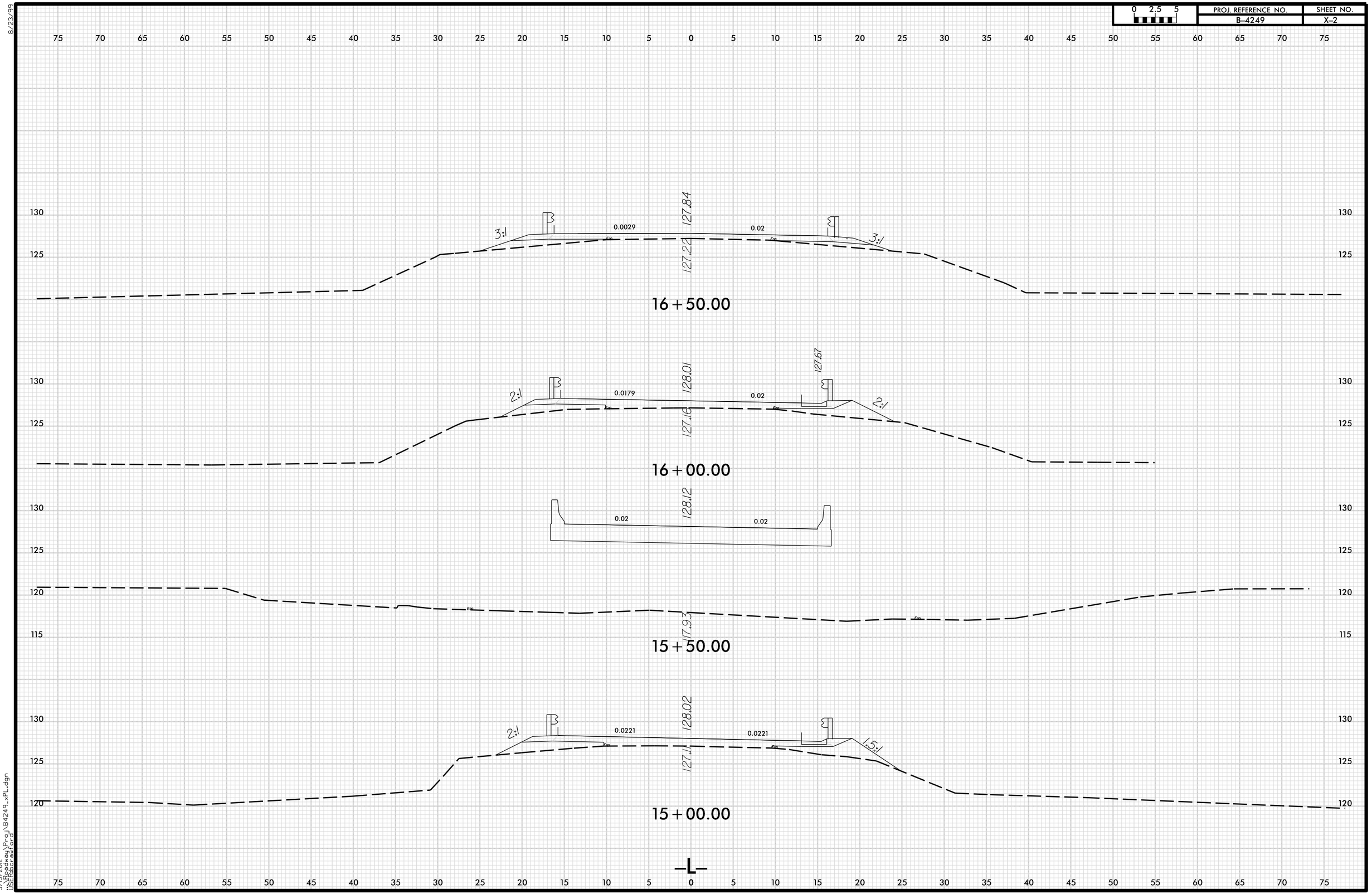

3/13/2012
J:\Roadway\Proj\B4249_xPL.dgn
USERbcrawford

8/23/99

0 2.5 5	PROJ. REFERENCE NO.	SHEET NO.
	B-4249	X-3

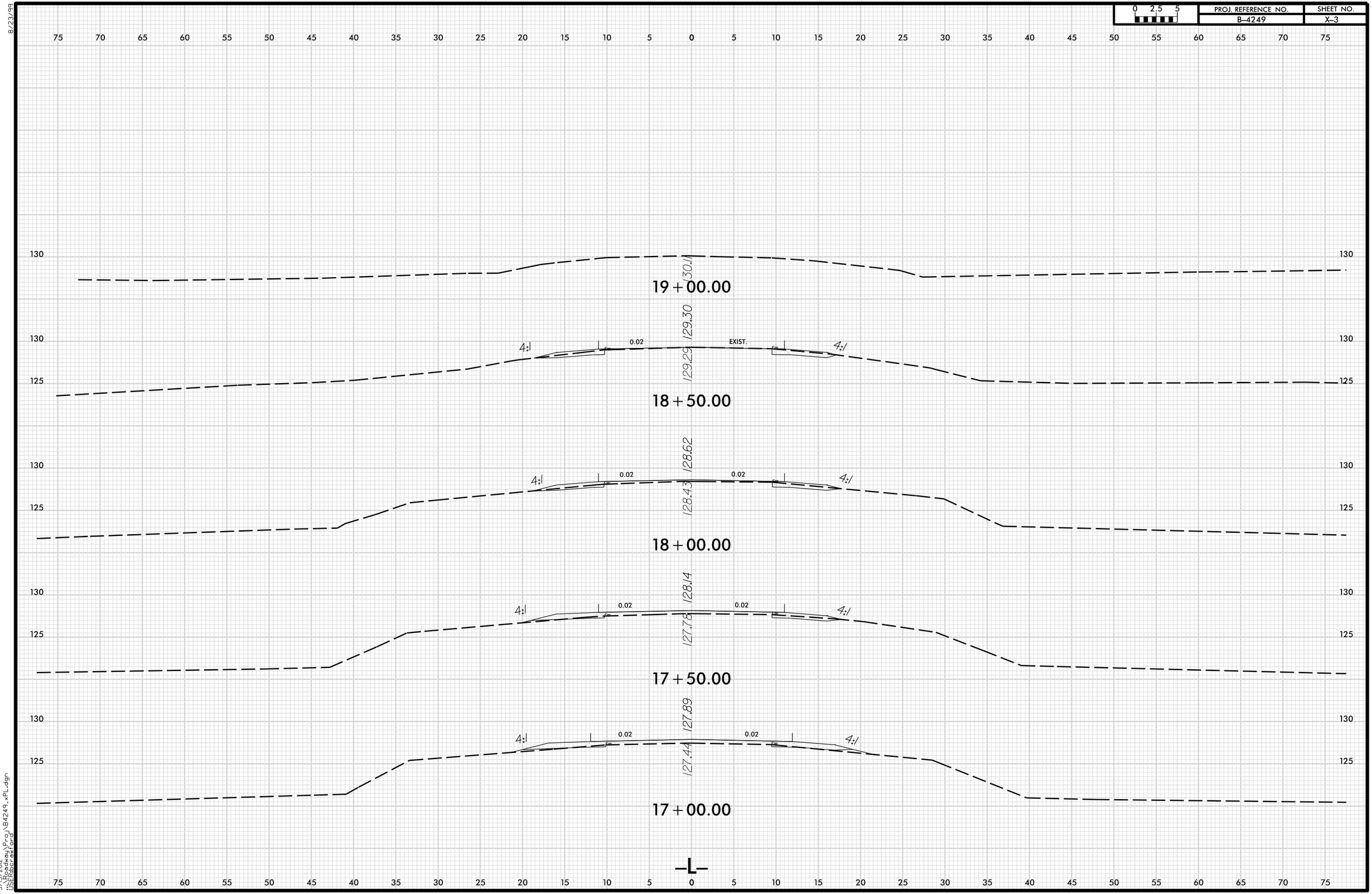

3/13/2012
J:\Roadway\Proj\B4249_xPL.dgn
USERbcrawford