37 WATAUGA COUNTY PROJ. NO. B-5226

BM #1: 8.75' RT. OF STA. 14+83.76 -L-
ELEV. 3602.11
BM #2: 22.12' RT. OF STA. 17+04.08 -L-
ELEV. 3594.07

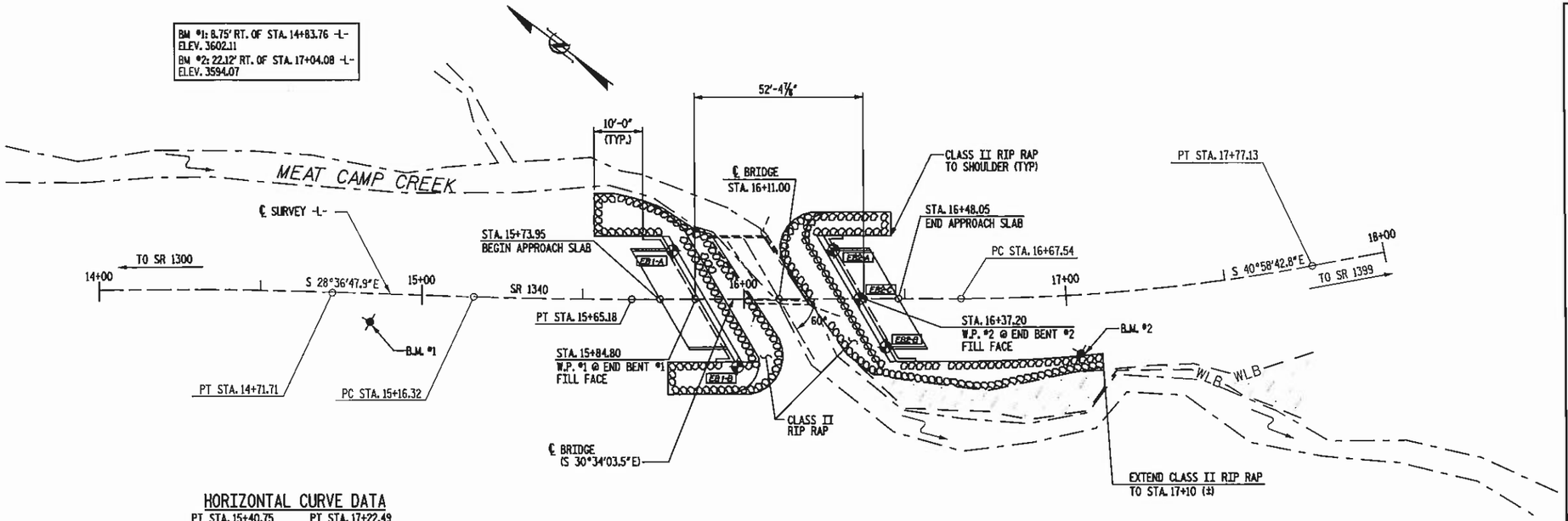

PLAN

SCALE: 1" = 20'-0"

NOTES

1. ALL PILES SHALL BE DRIVEN TO A MINIMUM BEARING CAPACITY OF 50 TONS EACH
2. THE QUANTITY OF RIP RAP TO BE PAID FOR WILL BE THE ACTUAL NUMBER OF TONS OF EACH CLASS OF RIP RAP WHICH HAS BEEN INCORPORATED INTO THE COMPLETED AND ACCEPTED WORK. THE RIP RAP WILL BE MEASURED BY BEING WEIGHED IN TRUCKS ON CERTIFIED PLATFORM SCALES OR OTHER CERTIFIED WEIGHING DEVICES. THE QUANTITY OF RIP RAP WILL BE PAID FOR AT THE CONTRACT UNIT PRICE PER TON:

PLAIN RIP RAP CLASS II (2'-0" THICK)		FILTER FABRIC
END BENT NO. 1	130 TONS	120 SQUARE YARDS
END BENT NO. 2	120 TONS	120 SQUARE YARDS
TOTAL	250 TONS	240 SQUARE YARDS

3. THIS STRUCTURE HAS BEEN DESIGNED IN ACCORDANCE WITH FHWA'S TECHNICAL ADVISORY T5140.20 (SCOUR AT BRIDGES).
4. ROCK EXCAVATION IS ANTICIPATED FOR THE CONSTRUCTION OF THE PILE CAP AT END BENT NO. 2. COST SHALL BE INCLUDED UNDER ITEM "EXCAVATION AND EMBANKMENT."
5. STEEL PILE POINTS ARE REQUIRED FOR ALL PILES AT END NO. 1 AND NO. 2 SEE SPECIAL PROVISIONS
6. THE STEEL PILES SHALL BE GALVANIZED IN ACCORDANCE WITH SECTION 1076 OF THE STANDARD SPECIFICATIONS. FOR GALVANIZING STEEL PILES. SEE SPECIAL PROVISIONS.
7. WHEN DRIVING PILES, THE MAXIMUM BLOW COUNT SHALL NOT BE EXCEEDED.
8. PILES AT END BENT NO.1 SHALL BE DRIVEN TO AN ELEVATION NO HIGHER THAN EL. 3584.50 (LT) AND EL. 3567.00 (RT).
9. PILES AT END BENT NO. 2 SHALL BE DRIVEN TO AN ELEVATION NO HIGHER THAN EL. 3582.50 (LT) AND EL. 3574.00 (RT)
10. DELINEATORS ON BARRIER RAIL AND ON STEEL BEAM GUARDRAIL SHALL BE INCLUDED IN THE PRICE BID FOR THESE ITEMS.
11. CURRENT ADT = 740 VPD.
12. FOR CRANE SAFETY, SEE SPECIAL PROVISIONS.
13. FOR FALSEWORK AND FORMWORK, SEE SPECIAL PROVISIONS.
14. FOR SUBMITTAL OF WORKING DRAWINGS, SEE SPECIAL PROVISIONS.

⊕ GEOTECH BORE HOLES LOCATION

HORIZONTAL CURVE DATA

PI STA. 15+40.75	PI STA. 17+22.49
△ = 1°57'15.6" (LT)	△ = 10°24'39.3" (LT)
D = 4°00'00.0"	D = 9°30'00.0"
L = 48.86'	L = 109.59'
T = 24.43'	T = 54.95'
R = 1,432.39'	R = 603.11'

HYDRAULIC DATA

DESIGN DISCHARGE	=	600	CFS
DESIGN FREQUENCY	=	25	YRS
DESIGN HW ELEVATION	=	3600.86	FT
DRAINAGE AREA	=	1.53	SQ MI
BASE DISCHARGE (Q_{100})	=	1000	CFS
BASE HW ELEVATION	=	3601.57	FT

-3.0000% △ -3.4706%
P.I. 15+45.00
EL. 3,600.15'
L = 60'
GRADE DATA

-3.4706% △ -5.8125%
P.I. 17+15.00
EL. 3,594.25'
L = 100'
GRADE DATA

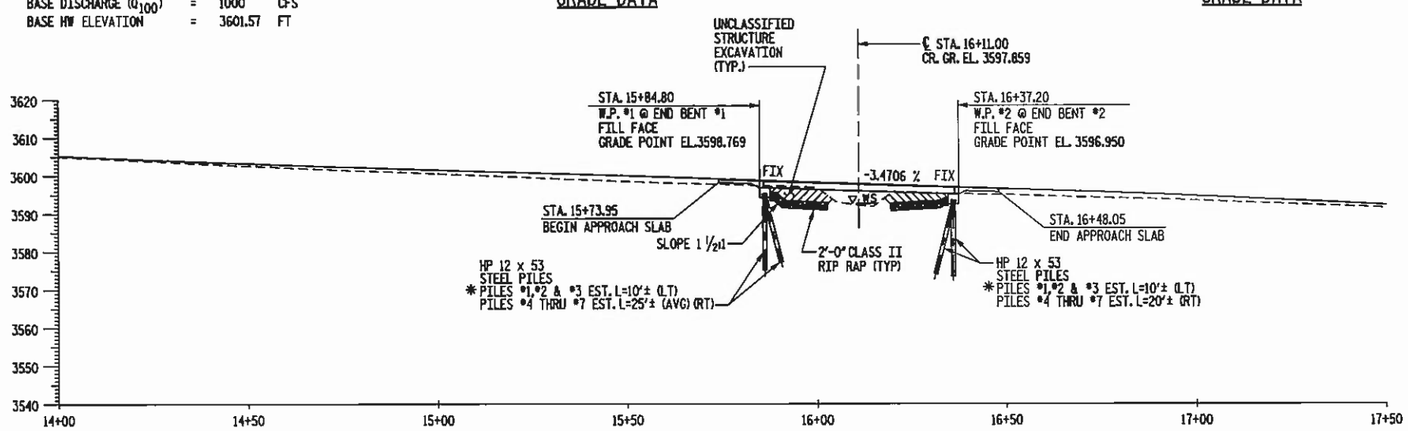

PROFILE ALONG ℄ SURVEY

SCALE: 1" = 20'

* PILE EXCAVATION WILL BE REQUIRED TO INSTALL PILES #1 & #2 (LT.) AT END BENT #1 & #2. SEE SPECIAL PROVISIONS

DESCRIPTION OF EXISTING BRIDGE

1 SPAN @ 18'-9¾" x 8" TIMBER FLOOR / 3" ASPHALT WEARING SURFACE ON TIMBER JOISTS ON TIMBER END BENT CAPS AND TIMBER POSTS AND SILLS; 19'-3" CLEAR ROADWAY WIDTH SHALL BE REMOVED.

PROJECT NO. 42824
COUNTY: WATAUGA
STATION: 16+11.00
REPLACES BRIDGE NO. 37

STATE OF NORTH CAROLINA
DEPARTMENT OF TRANSPORTATION
RALEIGH

BRIDGE NO. 37 ON SR 1340
OVER MEAT CAMP CREEK

NORTH CAROLINA PROFESSIONAL SEAL 20537 ENGINEER JAMES E. MONDOLFI
3-7-11

Florence & Hutcheson
CONSULTING ENGINEERS
3121 Kingdom Way Suite 100 Raleigh, NC 27607
NC License No: F-0258

REVISIONS						SHEET NO.
NO.	BY	DATE	NO.	BY	DATE	1
1			3			TOTAL SHEETS
2			4			29

DRAWN BY: C.L. SMITH DATE: NOV 2010
CHECKED BY: J.E. MONDOLFI DATE: NOV 2010

NOT TO SCALE

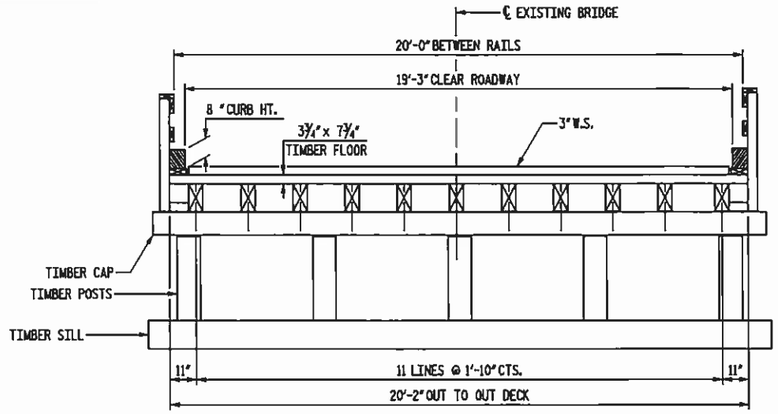

EXISTING BRIDGE SECTION

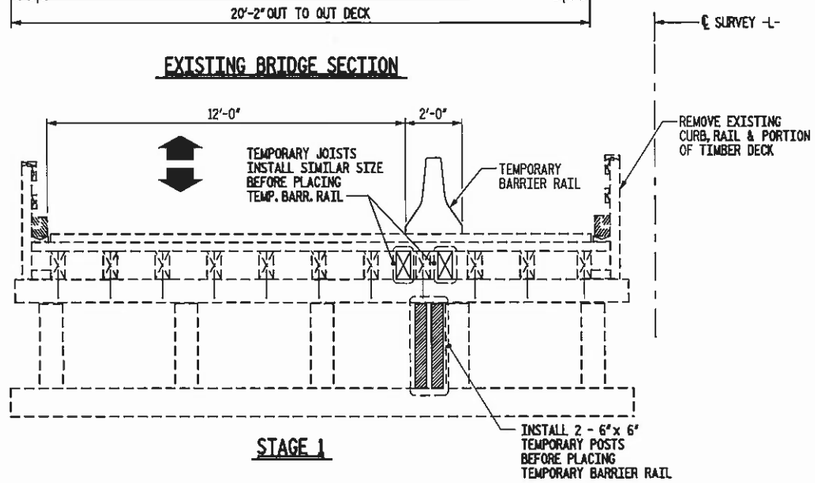

STAGE 1

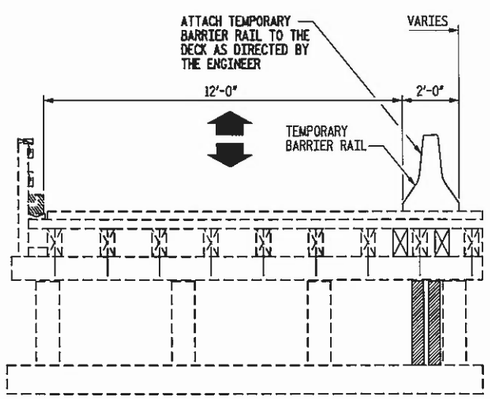

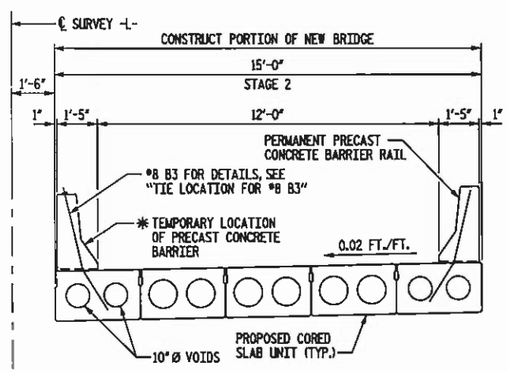

STAGE 2

* PLACE BARRIER OVER REBARS EXTENDING OUT OF CORED SLAB UNIT. DO NOT GROUT HOLES IN BARRIER SECTIONS. SNUG TIGHT REBAR ANCHOR RODS.

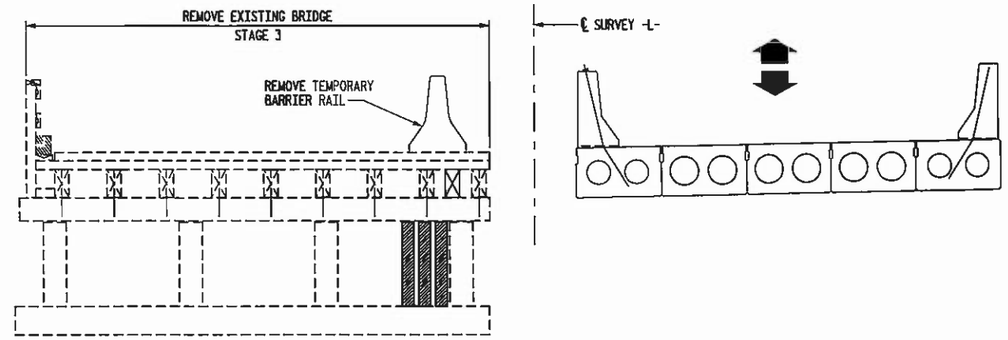

STAGE 3

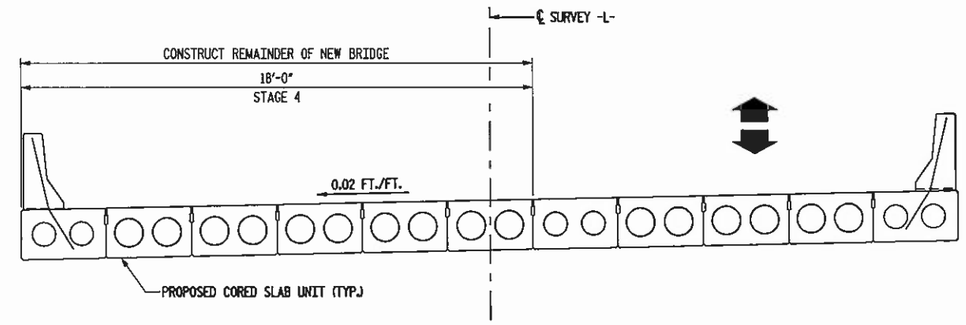

STAGE 4

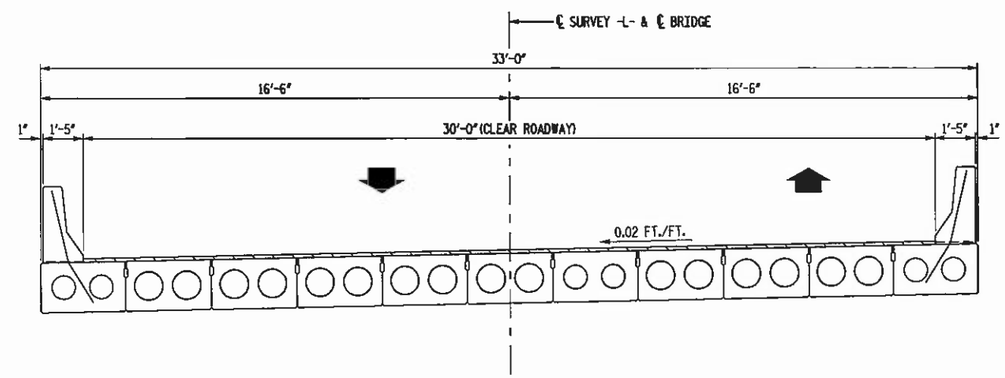

STAGE 5

NOTES

STAGE 1:

1. REMOVE EXISTING CURB AND RAILING FROM THE SOUTH FASCIA OF THE EXISTING BRIDGE.
2. REMOVE EXISTING TIMBER JOISTS AND RELOCATE THREE TIMBER JOISTS UNDER TEMPORARY BARRIER RAIL LOCATION.
3. INSTALL TWO 6" x 6" TEMPORARY POSTS UNDER TEMPORARY BARRIER RAIL LOCATION.
4. SET TEMPORARY PORTABLE CONCRETE BARRIER CENTERED ABOVE THE THREE TIMBER JOISTS ON THE EXISTING BRIDGE.

STAGE 2:

1. CONSTRUCT PORTION OF NEW END BENTS AND SOUTH FASCIA WINGS.
2. INSTALL FIVE CORED SLAB UNITS AND PERMANENT CONCRETE BARRIER RAILS.
3. MOVE TRAFFIC TO CONSTRUCTED PORTION OF NEW BRIDGE.

STAGE 3:

1. REMOVE REMAINDER OF EXISTING BRIDGE.

STAGE 4:

1. CONSTRUCT REMAINDER OF NEW END BENTS AND NORTH FASCIA WINGS.
2. INSTALL REMAINING CORED SLAB UNITS.
3. RELOCATE PRECAST CONCRETE BARRIER RAIL TO THE EXTERIOR CORED SLAB UNIT.

STAGE 5:

1. INSTALL ASPHALT WEARING SURFACE.

NOT TO SCALE

PROJECT NO. 42824
COUNTY: WATAUGA
STATION: 16+11.00
REPLACES BRIDGE NO. 37

STATE OF NORTH CAROLINA
DEPARTMENT OF TRANSPORTATION
RALEIGH

CONSTRUCTION STAGING LAYOUT
30' CLEAR ROADWAY - 60° SKEW

Florence & Hutcheson
CONSULTING ENGINEERS
5121 Kingdom Way, Suite 100 Raleigh, NC 27607
NC Licensed No: F-0325

NORTH CAROLINA PROFESSIONAL SEAL 20520 ENGINEER JAMES E. MONDOLFI
3-7-11

REVISIONS						SHEET NO.
NO.	BY	DATE	NO.	BY	DATE	2
1			3			TOTAL SHEETS
2			4			29

DRAWN BY: C.L. SMITH DATE: NOV 2010
CHECKED BY: J.E. MONDOLFI DATE: NOV 2010

PLOT: 3/1/2011 DGN: 42824 det Florence & Hutcheson, Inc.
FILE NAME: p:\cons\dot\ll\brwsgn37\mdl\BRG\brwsrvrd\v37-J042_Mdgn

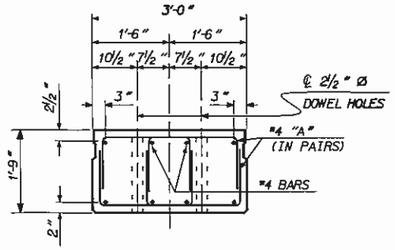

SLAB END ELEVATION

THE 2½" DOWEL HOLES AT FIXED ENDS OF SLAB SECTIONS SHALL BE FILLED WITH GROUT.

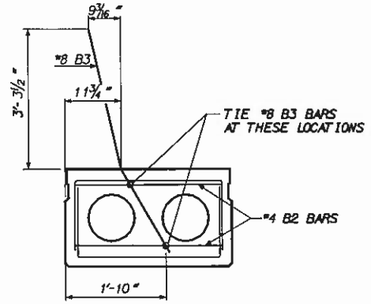

TIE LOCATION FOR #8 B3

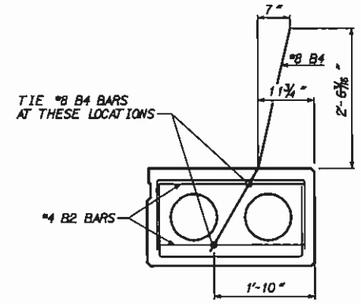

TIE LOCATION FOR #8 B4

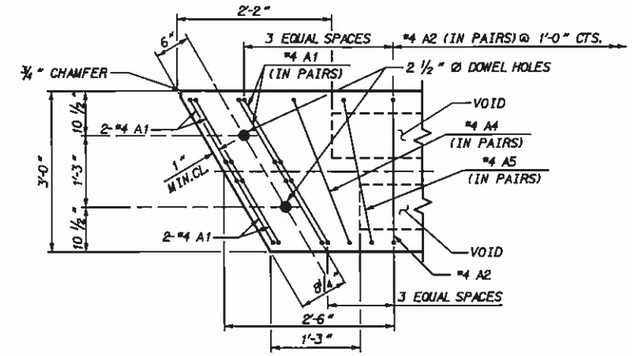

PART PLAN - 50' SLAB

GENERAL NOTES

ASSUMED LIVE LOAD - HS 20-44 OR ALTERNATE LOADING.

CONCRETE: f'c = 5000 psi
✱ CONCRETE: f'ci = 4000 psi

✱ (COMPRESSIVE STRENGTH @ TRANSFER OF STRESSING FORCE.)

ALL PRESTRESS STRANDS SHALL MEET THE REQUIREMENTS OF ASTM A416.

ALL PRESTRESS STRANDS SHALL BE 7 WIRE, LOW RELAXATION, HIGH STRENGTH CABLES IN ACCORDANCE WITH THE SPECIFICATIONS.

SIZE	TYPE	AREA	ULTIMATE STR.
1/2" Ø	HIGH STR.	0.153 □" PER CABLE	41,300#

APPLIED FORCE
30,980# PER CABLE

STRUCTURAL STEEL ITEMS SHALL BE OF A GRADE CONFORMING TO EITHER ASTM A36 OR A373. EXCEPT HIGH STRENGTH BOLTS. HIGH STRENGTH BOLTS SHALL BE ASTM A325. ALL STRUCTURAL STEEL SHALL BE GALVANIZED AS PER THE SPECIFICATIONS.

ALL MATERIAL AND WORKMANSHIP SHALL COMPLY WITH THE APPLICABLE REQUIREMENTS OF THE STANDARD SPECIFICATIONS FOR ROADS AND STRUCTURES OF THE NC DEPARTMENT OF TRANSPORTATION DATED JULY 2006 AND WITH THE SPECIAL PROVISIONS.

THE ULTIMATE STRENGTH OF THE CORED SLAB UNIT MUST MEET THE REQUIREMENTS OF THE APPLICABLE AASHTO SPECIFICATIONS. STRANDS SHALL BE CUT FLUSH WITH ENDS OF SLABS.

A POSITIVE HOLD DOWN SYSTEM MUST BE EMPLOYED TO PREVENT VOIDS FROM RISING.

NOTE:
SPIRAL WIRE REINFORCEMENT MAY BE USED IN LEIU OF DEFORMED BARS FOR STIRRUPS. MIN. W3.5 X 6" PITCH.

UNLESS OTHERWISE NOTED ON THE PLANS, ALL EXPOSED CORNERS ON STRUCTURES SHALL BE CHAMFERED ¾".

APPLY EPOXY PROTECTION COATING TO THE CORED SLAB UNIT ENDS.

SPECIAL SLAB UNIT & EXTERIOR SLAB UNIT	50'
CAMBER (SLAB UNIT ALONE IN PLACE)	1.332" (UP)
DEFLECTION (SUPERIMPOSED DEAD LOAD)	0.254" (DOWN)*
FINAL DEFLECTION	1.078" (UP)
* INCLUDES FUTURE WEARING SURFACE	

INTERIOR SLAB UNIT	50'
CAMBER (SLAB UNIT ALONE IN PLACE)	1.553" (UP)
DEFLECTION (SUPERIMPOSED DEAD LOAD)	0.254" (DOWN)*
FINAL DEFLECTION	1.299" (UP)
* INCLUDES FUTURE WEARING SURFACE	

SHEATH CHART			
SPAN LENGTH	NUMBER OF SHEATHED STRANDS PER EXTERIOR SLAB SECTIONS	NUMBER OF SHEATHED STRANDS PER INTERIOR SLAB SECTIONS	NUMBER OF SHEATHED STRANDS PER SPECIAL INTERIOR SLAB SECTION
50'	✱2 @ 2"	✱2 @ 2"	✱2 @ 2"

✱ BOND SHALL BE BROKEN ON THESE STRANDS FOR A DISTANCE OF 4 FEET FROM THE END OF THE SLAB

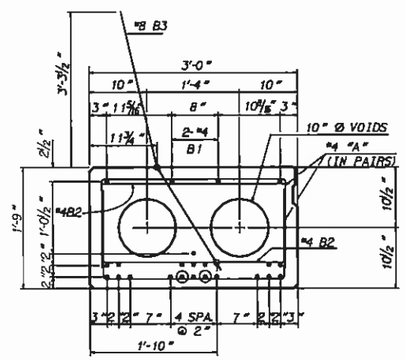

50' SPAN

21 -½" Ø H.S. STRANDS
INTERIOR SLAB UNIT #7

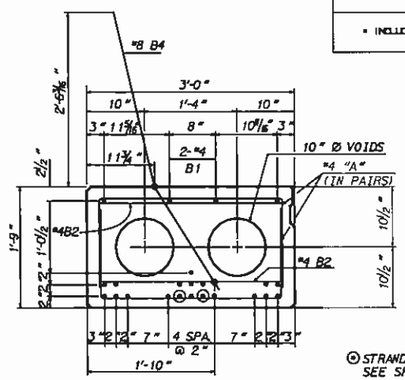

50' SPAN

21 -½" Ø H.S. STRANDS
EXTERIOR SLAB SECTIONS

⊕ STRAND IS SHEATHED. SEE SHEATH CHART.

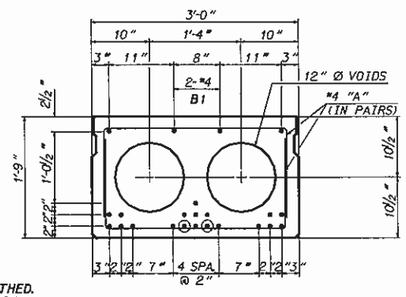

50' SPAN

21 -½" Ø H.S. STRANDS
INTERIOR SLAB SECTIONS

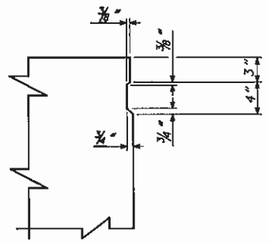

SHEAR KEY DETAIL

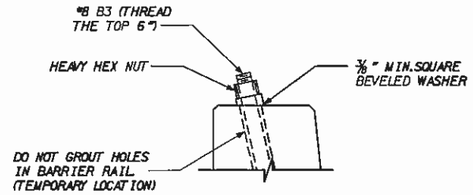

DETAIL "A"

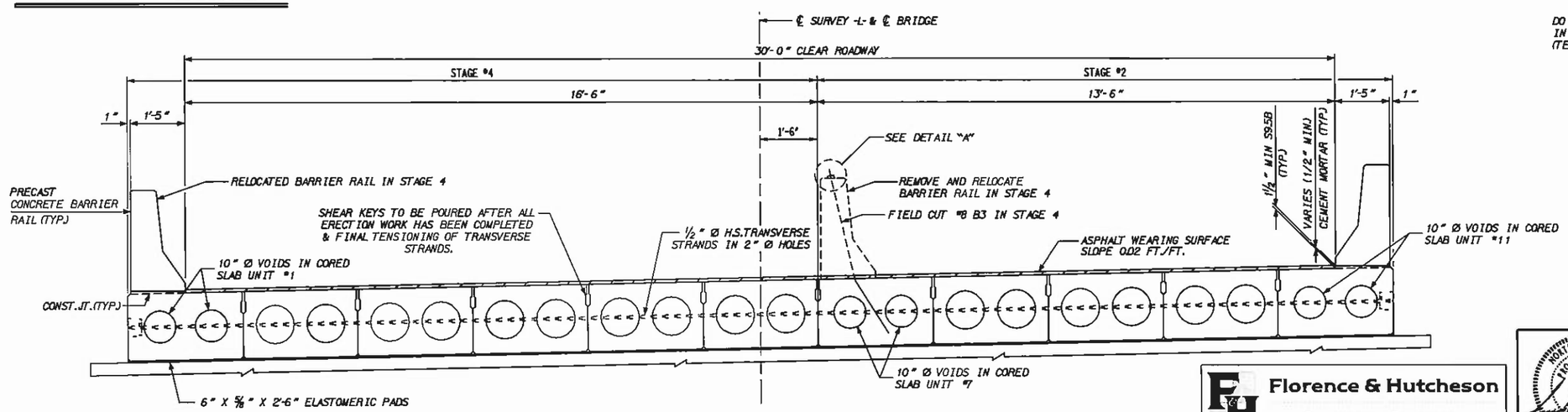

TYPICAL SECTION

NOT TO SCALE

PROJECT NO. 42824
COUNTY: WATAUGA
STATION: 16+11.00
REPLACES BRIDGE NO. 37

STATE OF NORTH CAROLINA
DEPARTMENT OF TRANSPORTATION
RALEIGH

STANDARD PRESTRESSED CORED SLAB
50' SPAN
30' CLEAR ROADWAY - 60° SKEW

Florence & Hutcheson
CONSULTING ENGINEERS
5121 Kingdom Way, Suite 100 Raleigh, NC 27607
NC License No. F-0368

NORTH CAROLINA PROFESSIONAL SEAL 20537 JAMES E. MONDOLFI
3-7-11

REVISIONS						SHEET NO.
NO.	BY	DATE	NO.	BY	DATE	3
1			3			TOTAL SHEETS
2			4			29

DRAWN BY: C.L. SMITH DATE: NOV 2010
CHECKED BY: J.E. MONDOLFI DATE: NOV 2010

PLOT: 3/4/2011

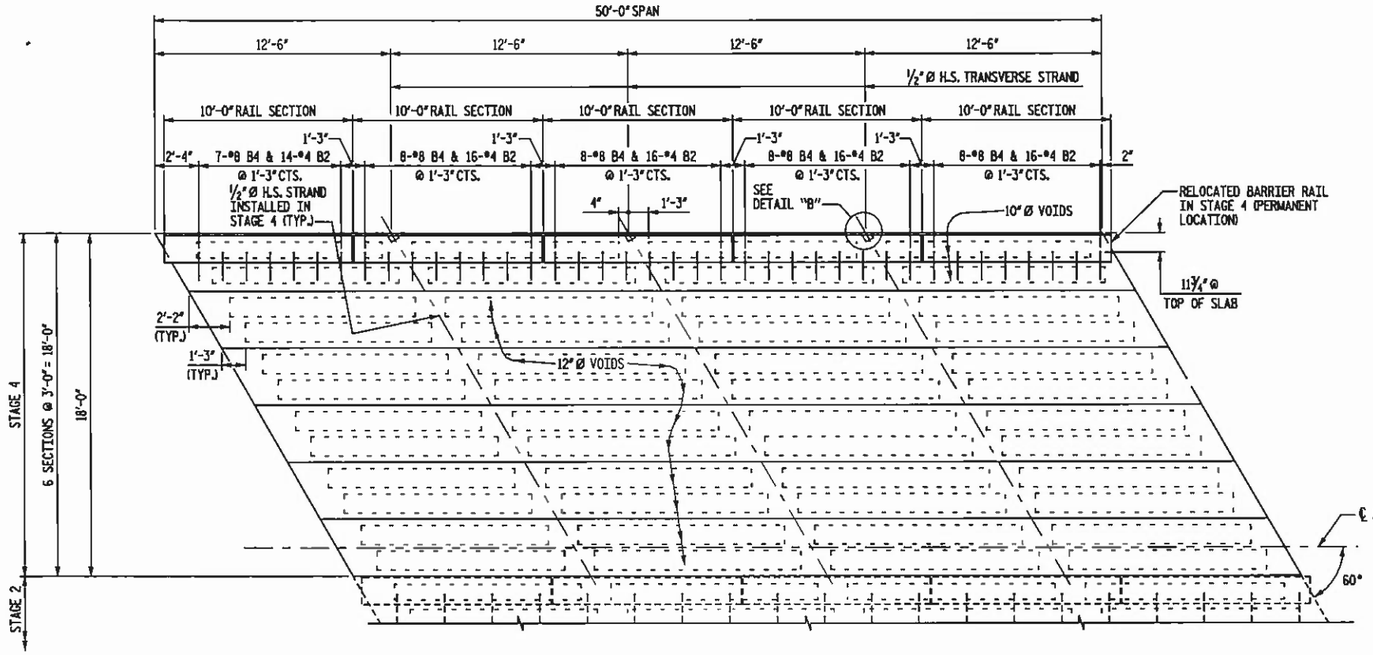

STAGE 4 PLAN VIEW - 50' SPAN

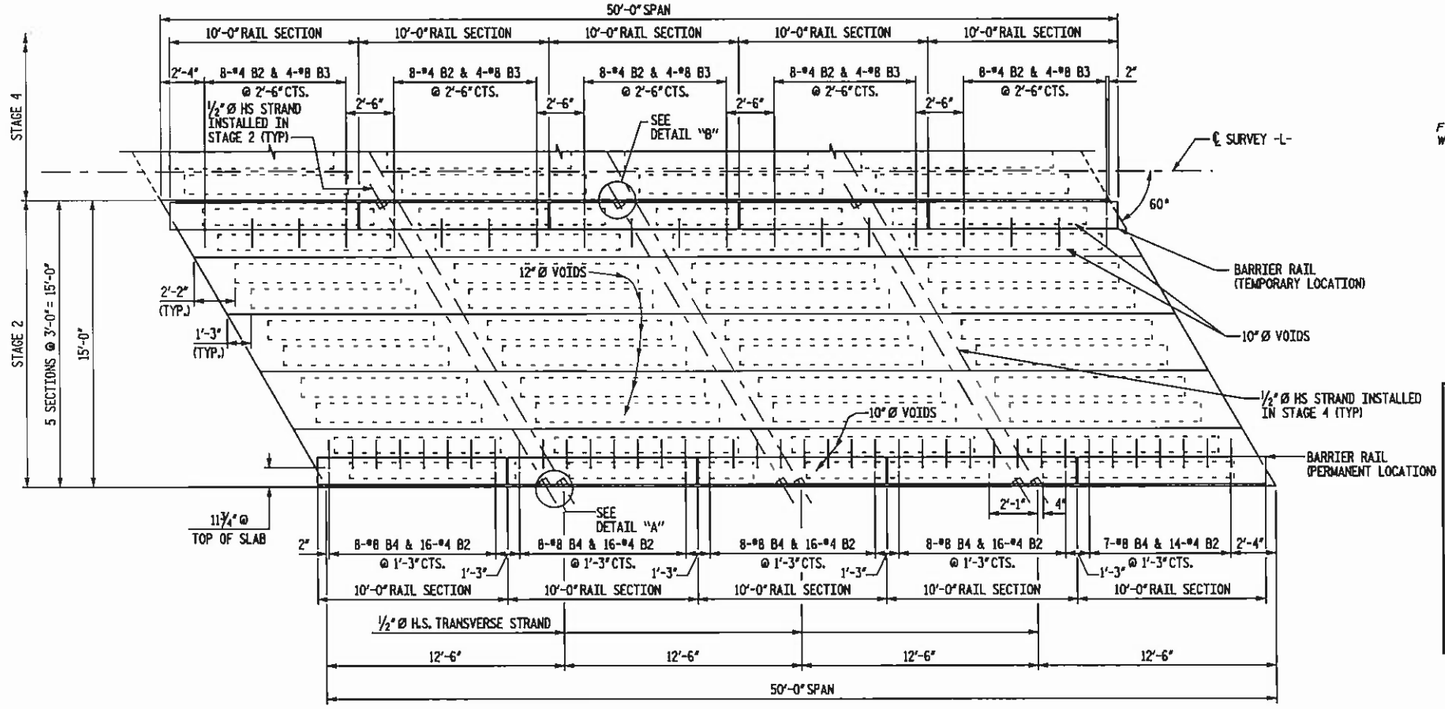

STAGE 2 PLAN VIEW - 50' SPAN

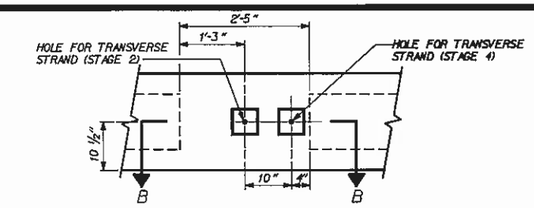

ELEVATION VIEW

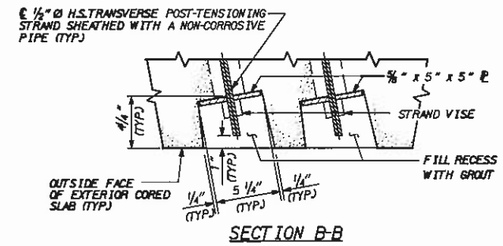

SECTION B-B

DETAIL "A"

GROUTED RECESS AT END OF POST-TENSIONED STRAND CORED SLABS

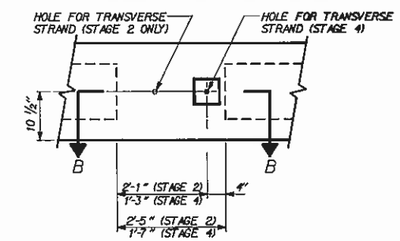

ELEVATION VIEW

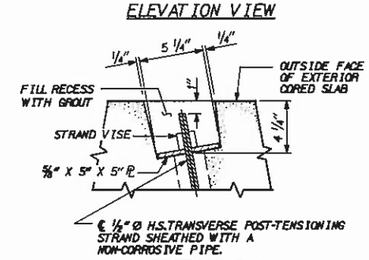

SECTION B-B

DETAIL "B"

GROUTED RECESS AT END OF POST-TENSIONED STRAND CORED SLABS

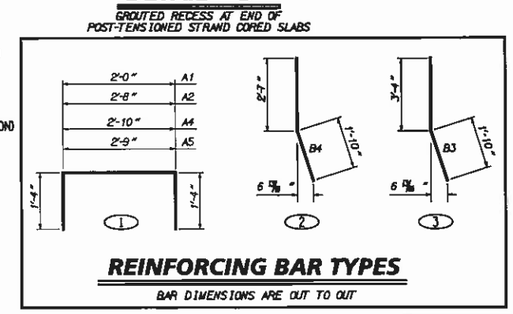

REINFORCING BAR TYPES

BAR DIMENSIONS ARE OUT TO OUT

BILL OF MATERIAL FOR ONE 50'-0" INTERIOR CORED SLAB SECTION

BAR	NO.	SIZE	TYPE	LENGTH	WEIGHT
B1	4	#4	STR	25'-9"	69
A1	16	#4	1	4'-8"	50
A2	92	#4	1	5'-4"	328
A4	4	#4	1	5'-6"	15
A5	4	#4	1	5'-5"	14
REINFORCING STEEL				LBS.	476
5000 P.S.I. CONCRETE				C.Y.	6.8
0.5" Ø L.R. STRANDS				NO.	21

BILL OF MATERIAL FOR ONE 50'-0" EXTERIOR CORED SLAB SECTION

BAR	NO.	SIZE	TYPE	LENGTH	WEIGHT
B1	4	#4	STR	25'-9"	69
B2	78	#4	STR	2'-8"	139
* B4	39	#8	2	4'-5"	460
A1	16	#4	1	4'-8"	50
A2	92	#4	1	5'-4"	328
A4	4	#4	1	5'-6"	15
A5	4	#4	1	5'-5"	14
REINFORCING STEEL				LBS.	615
*EPOXY COATED REINFORCING STEEL				LBS.	460
5000 P.S.I. CONCRETE				C.Y.	6.8
0.5" Ø L.R. STRANDS				NO.	21

BILL OF MATERIAL FOR ONE 50'-0" CORED SLAB SECTION - UNIT #7

BAR	NO.	SIZE	TYPE	LENGTH	WEIGHT
B1	4	#4	STR	25'-9"	69
B2	40	#4	STR	2'-8"	71
* B3	20	#8	3	5'-2"	276
A1	16	#4	1	4'-8"	50
A2	92	#4	1	5'-4"	328
A4	4	#4	1	5'-6"	15
A5	4	#4	1	5'-5"	14
REINFORCING STEEL				LBS.	547
*EPOXY COATED REINFORCING STEEL				LBS.	276
5000 P.S.I. CONCRETE				C.Y.	6.8
0.5" Ø L.R. STRANDS				NO.	21

PROJECT NO. 42824
COUNTY: WATAUGA
STATION: 16+11.00
REPLACES BRIDGE NO. 37

STATE OF NORTH CAROLINA
DEPARTMENT OF TRANSPORTATION
RALEIGH

STANDARD PRESTRESSED CORED SLAB
50' SPAN
30' CLEAR ROADWAY - 60° SKEW

NOT TO SCALE

DRAWN BY: C.L. SMITH DATE: NOV 2010
CHECKED BY: J.E. MONDOLFI DATE: NOV 2010

Florence & Hutcheson
CONSULTING ENGINEERS
5121 Kingdom Way, Suite 100 Raleigh, NC 27607
NC License No: F-0258

NORTH CAROLINA PROFESSIONAL SEAL 20532 ENGINEER
3-7-11

REVISIONS						SHEET NO.
NO.	BY	DATE	NO.	BY	DATE	4
1			3			TOTAL SHEETS
2			4			29

FILE NAME: p:\roads\bridge_37\standard_37\standards\v37_std_1.dgn
PLOT: 3/4/2011

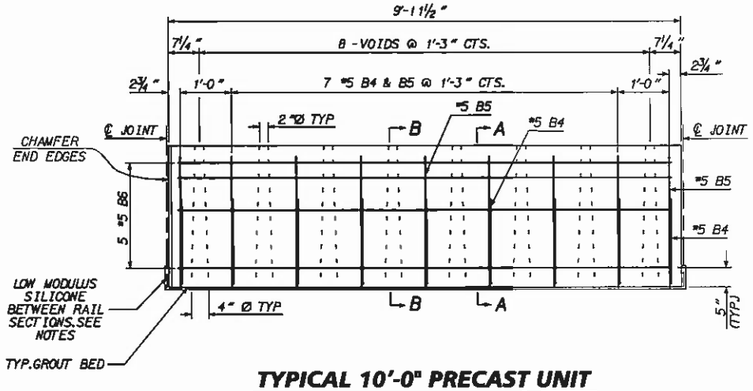

TYPICAL 10'-0" PRECAST UNIT

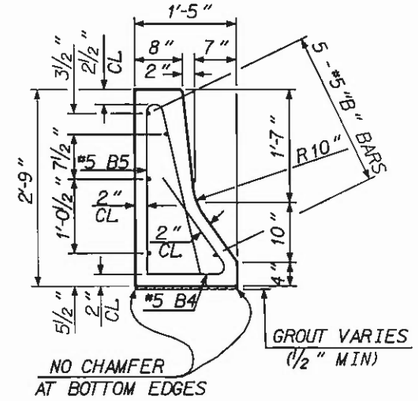

SECTION A-A

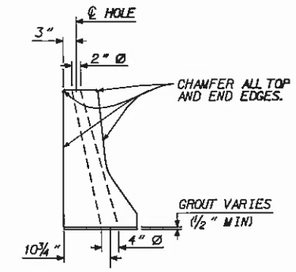

SECTION B-B

BILL OF MATERIAL FOR ONE 10'-0" RAIL SECTION					
BAR	NO.	SIZE	TYPE	LENGTH	WEIGHT
B4	9	#5	1	4'-11"	46
B5	9	#5	2	2'-8"	25
B6	5	#5	STR	9'-7"	50
REINFORCING STEEL LBS. = 121					
CLASS AA CONCRETE CU. YDS. = 1.0					

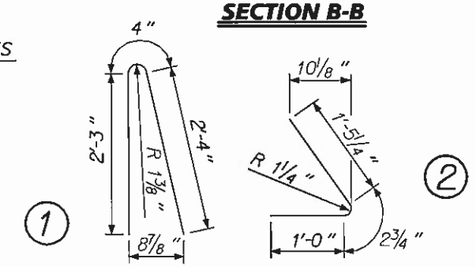

REINFORCING BAR TYPES
BAR DIMENSIONS ARE OUT TO OUT

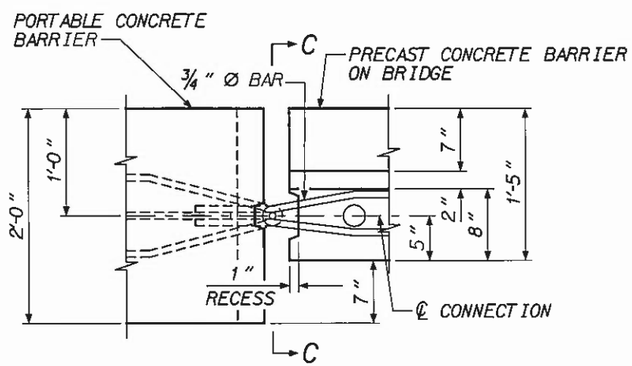

PLAN

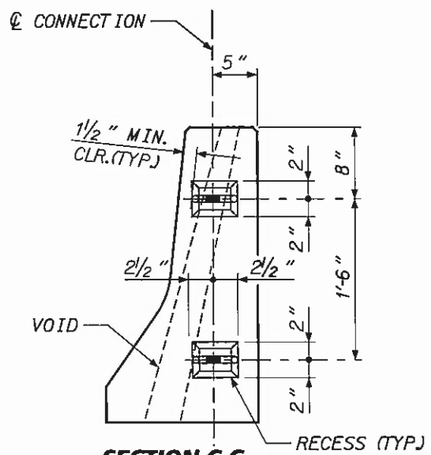

SECTION C-C

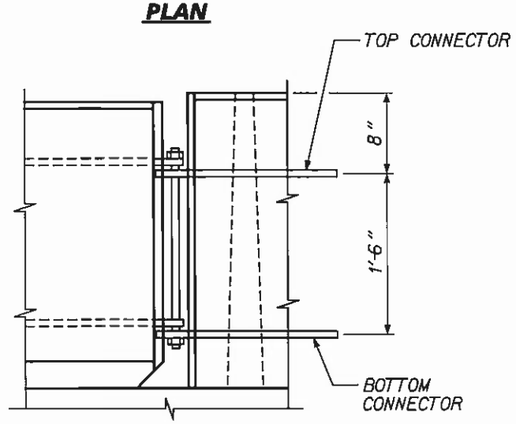

ELEVATION

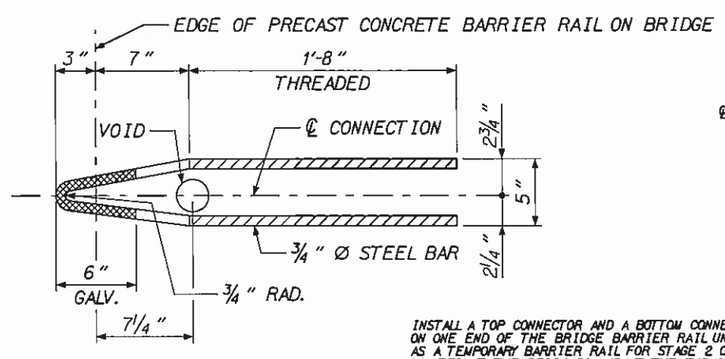

CONNECTOR DETAIL

INSTALL A TOP CONNECTOR AND A BOTTOM CONNECTOR ON ONE END OF THE BRIDGE BARRIER RAIL UNIT,USED AS A TEMPORARY BARRIER RAIL FOR STAGE 2 CONSTRUCTION, LOCATED AT THE BEGINNIG AND AT THE END OF THE BRIDGE.

AFTER MOVING THE BARRIER RAIL TO IT'S PERMANENT LOCATION IN STAGE 4,CUT THE ¾" Ø BAR CONNECTOR FLUSH WITH THE CONCRETE SURFACE. FILL RECESS WITH NON-SHRINK,NON-METALLIC GROUT TO THE NEAT LINE OF BARRIER RAIL UNIT.

CONNECTION DETAIL

(PORTABLE CONCRETE BARRIER AT END OF BRIDGE)

NOT TO SCALE

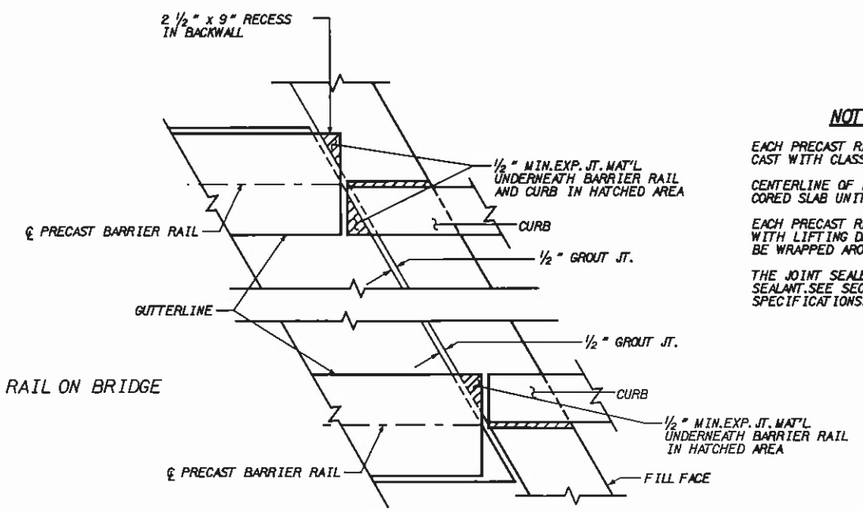

PLAN OF BARRIER RAIL AND CURB
CORED SLAB AT END BENTS

NOTES

EACH PRECAST RAIL UNIT SHALL BE CAST WITH CLASS AA CONCRETE.

CENTERLINE OF RAIL TO BE FLUSH WITH END OF CORED SLAB UNITS AT EACH END OF SPAN.

EACH PRECAST RAIL UNIT SHALL BE SUPPLIED WITH LIFTING DEVICE(S). NO CABLES ARE TO BE WRAPPED AROUND THE RAIL UNITS FOR LIFTING.

THE JOINT SEALER SHALL BE LOW MODULUS SILICONE SEALANT.SEE SECTION 1028-4 OF THE STANDARD SPECIFICATIONS.

PROJECT NO. 42824
COUNTY: WATAUGA
STATION: 16+11.00
REPLACES BRIDGE NO. 37

STATE OF NORTH CAROLINA
DEPARTMENT OF TRANSPORTATION
RALEIGH

STANDARD PRECAST CONCRETE BARRIER RAIL SECTIONS
50' SPAN
30' CLEAR ROADWAY - 60° SKEW

Florence & Hutcheson
CONSULTING ENGINEERS
5121 Kingdom Way, Suite 100 Raleigh, NC 27607
NC License No: F-0258

NORTH CAROLINA PROFESSIONAL SEAL 20532 JAMES E. MONDOLFI
3-7-11

REVISIONS						SHEET NO.
NO.	BY	DATE	NO.	BY	DATE	5
1			3			TOTAL SHEETS
2			4			29

DRAWN BY: C.L. SMITH DATE: NOV 2010
CHECKED BY: J.E. MONDOLFI DATE: NOV 2010

PLOT: 3/4/2011 10:05:30 AM Florence & Hutcheson, Inc.
FILE NAME: p:\cons\bdr\proj_37\sheets\proj-cs1.dgn

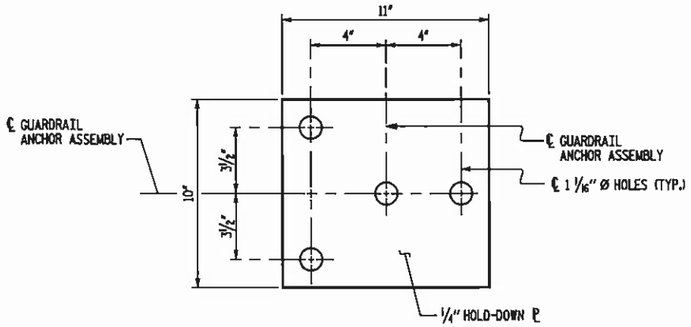

PLAN

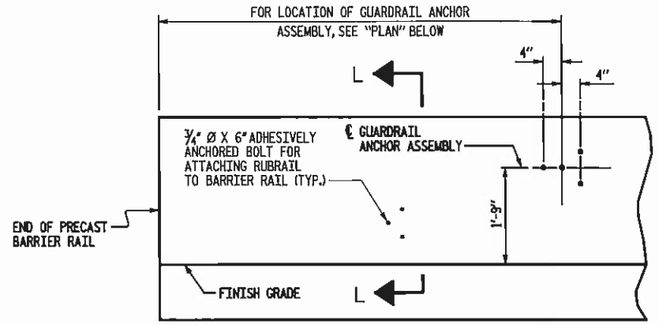

ELEVATION

FOR LOCATION OF RUBRAIL, SEE ROADWAY STD. 862.03

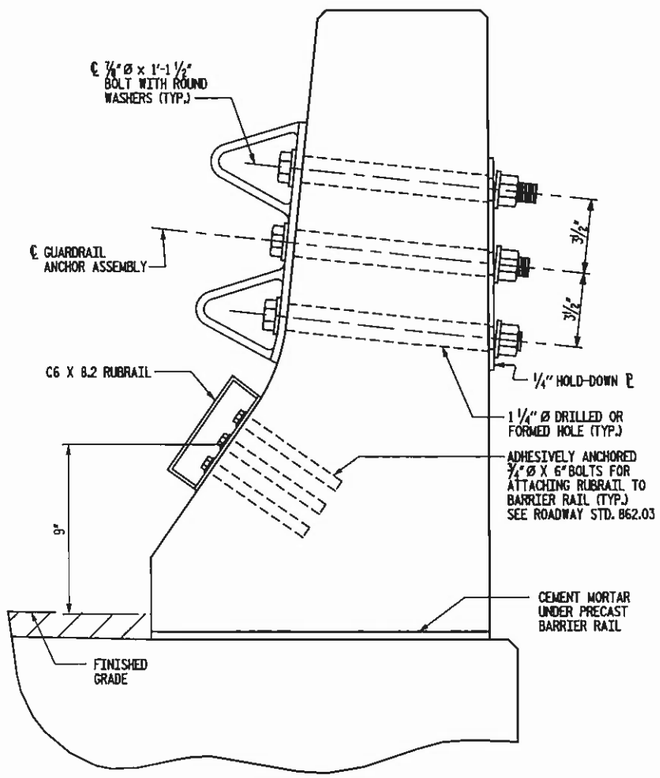

SECTION L-L

GUARDRAIL ANCHOR ASSEMBLY DETAILS

FOR CONCRETE BARRIER RAIL ONLY
(FOR LOCATION OF GUARDRAIL ANCHOR ASSEMBLY, SEE THIS SHEET)

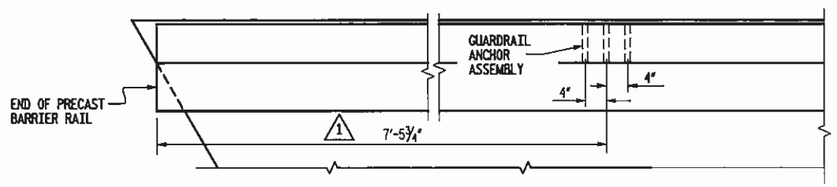

PLAN

LOCATION OF ANCHORS FOR GUARDRAIL

FOR CONCRETE BARRIER RAIL ONLY
ABUTMENT #1 SHOWN, ABUTMENT #2 SIMILAR

NOTES

THE GUARDRAIL ANCHOR ASSEMBLY SHALL CONSIST OF A 1/4" HOLD DOWN PLATE AND 7/8" Ø BOLTS WITH NUTS AND WASHERS, RUBRAIL, AND ADHESIVELY ANCHORED BOLTS.

THE HOLD-DOWN PLATE SHALL CONFORM TO AASHTO M270 GRADE 36. AFTER FABRICATION, THE HOLD-DOWN PLATE SHALL BE HOT-DIP GALVANIZED IN ACCORDANCE WITH AASHTO M111.

BOLTS SHALL CONFORM TO THE REQUIREMENTS OF ASTM A307 AND NUTS SHALL CONFORM TO THE REQUIREMENTS OF AASHTO M291. BOLTS, NUTS AND WASHERS SHALL BE GALVANIZED. (AT THE CONTRACTOR'S OPTION, STAINLESS STEEL BOLTS, NUTS AND WASHERS MAY BE USED AS AN ALTERNATE FOR THE 7/8" Ø GALVANIZED BOLTS, NUTS AND WASHERS. THEY SHALL CONFORM TO OR EXCEED THE MECHANICAL REQUIREMENTS OF ASTM A307. THE USE OF THIS ALTERNATE SHALL BE APPROVED BY THE ENGINEER.)

THE GUARDRAIL ANCHOR ASSEMBLY IS REQUIRED AT ALL POINTS WHERE APPROACH GUARDRAIL IS TO BE ATTACHED TO THE END OF CONCRETE BARRIER RAIL OR CONCRETE END POSTS. FOR POINTS OF ATTACHMENT, SEE SKETCH.

AFTER INSTALLATION, THE EXPOSED THREAD OF THE BOLT SHALL BE BURRED WITH A SHARP POINTED TOOL.

THE COST OF THE GUARDRAIL ANCHOR ASSEMBLY SHALL BE INCLUDED IN THE UNIT CONTRACT PRICE BID FOR GUARDRAIL ANCHOR UNIT TYPE B-77.

THE 1 1/4" Ø HOLES SHALL BE FORMED OR DRILLED WITH A CORE BIT. IMPACT TOOLS WILL NOT BE PERMITTED. ANY CONCRETE DAMAGED BY THIS WORK SHALL BE REPAIRED TO THE SATISFACTION OF THE ENGINEER.

THE C6 X 8.2 RUBRAIL IS TO BE ADHESIVELY ANCHORED TO THE RAIL USING THREE 3/4" Ø X 6" BOLTS WITH WASHERS. LEVEL ONE FIELD TESTING IS REQUIRED, AND THE YIELD LOAD OF THE 3/4" Ø BOLT IS 12 KIPS. FOR ADHESIVELY ANCHORED ANCHOR BOLTS OR DOWELS, SEE SPECIAL PROVISIONS. SEE ROADWAY STANDARD 862.03 FOR DETAILS AND LOCATION OF THE RUBRAIL.

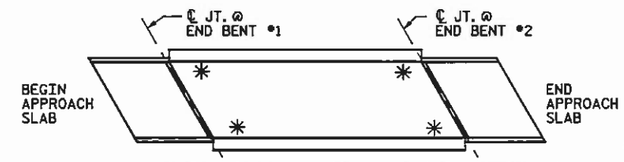

SKETCH SHOWING POINTS OF ATTACHMENT

✱ INDICATES POINTS OF ATTACHMENT

1 DIMENSION REVISED

PROJECT NO. 42824
COUNTY: WATAUGA
STATION: 16+11.00
REPLACES BRIDGE NO. 37

STATE OF NORTH CAROLINA
DEPARTMENT OF TRANSPORTATION
RALEIGH

SUPERSTRUCTURE
GUARDRAIL ANCHORAGE
DETAILS

Florence & Hutcheson
CONSULTING ENGINEERS
5121 Kingdom Way, Suite 100 Raleigh, NC 27607
NC License No. F-0158

NORTH CAROLINA PROFESSIONAL SEAL 20532 ENGINEER JAMES E. MONDOLFI
3-7-11

REVISIONS						SHEET NO.
NO.	BY	DATE	NO.	BY	DATE	6
1	JEM	11/9/10	3			TOTAL SHEETS
2			4			29

NOT TO SCALE

DRAWN BY: C.L. SMITH DATE: NOV 2010
CHECKED BY: J.E. MONDOLFI DATE: NOV 2010

PLOT: 3/4/2011

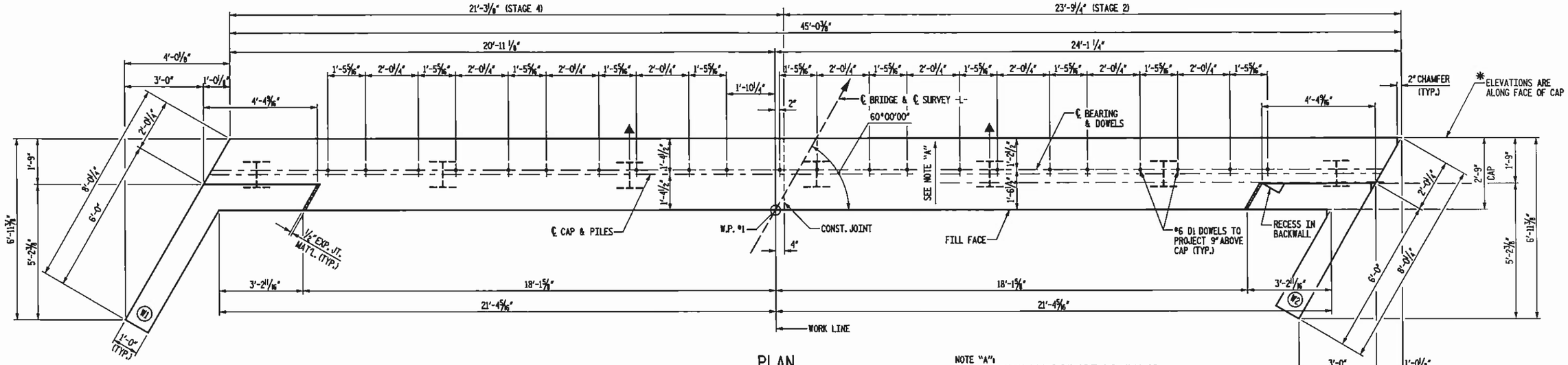

PLAN

NOTE "A":
THE TOP SURFACE OF THE END BENT CAP SHALL BE SLOPED DOWN TRANSVERSELY FROM THE FILL FACE TO THE BACK FACE AT THE RATE OF 0.040 FT. PER FOOT.

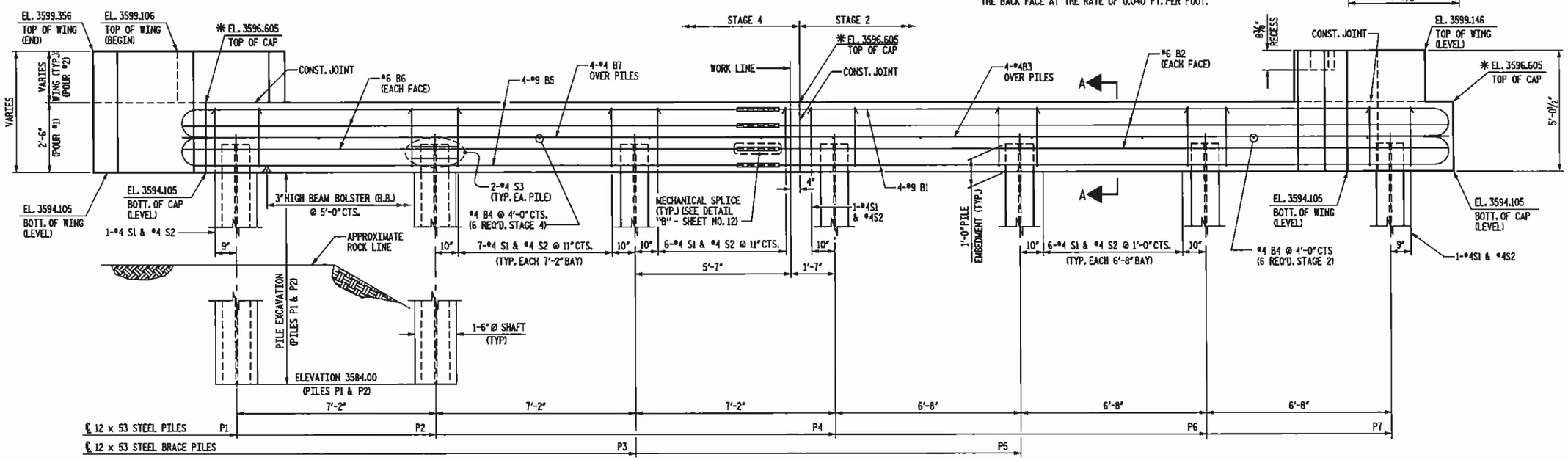

ELEVATION

PROJECT NO. 42824
COUNTY: WATAUGA
STATION: 16+11.00
REPLACES BRIDGE NO. 37

NOTES:

STIRRUPS IN CAP MAY BE SHIFTED SLIGHTLY AS NECESSARY TO CLEAR DOWELS.

INDICATES BRACE PILE (BATTER: 3:12)

NOT TO SCALE

Florence & Hutcheson
CONSULTING ENGINEERS
5121 Kingdom Way, Suite 100 Raleigh, NC 27607
NC Licenses No. F-0266

NORTH CAROLINA PROFESSIONAL SEAL 20532 ENGINEER
3-7-11

STATE OF NORTH CAROLINA
DEPARTMENT OF TRANSPORTATION
RALEIGH

CAST - IN - PLACE
END BENT NO. 1

REVISIONS						SHEET NO.
NO.	BY	DATE	NO.	BY	DATE	7
1			3			TOTAL SHEETS
2			4			29

DRAWN BY: C.L. SMITH DATE: NOV 2010
CHECKED BY: J.C. KO DATE: NOV 2010

PLOT: 3/4/2011 BRIDGE37 ## Florence & Hutcheson, Inc.

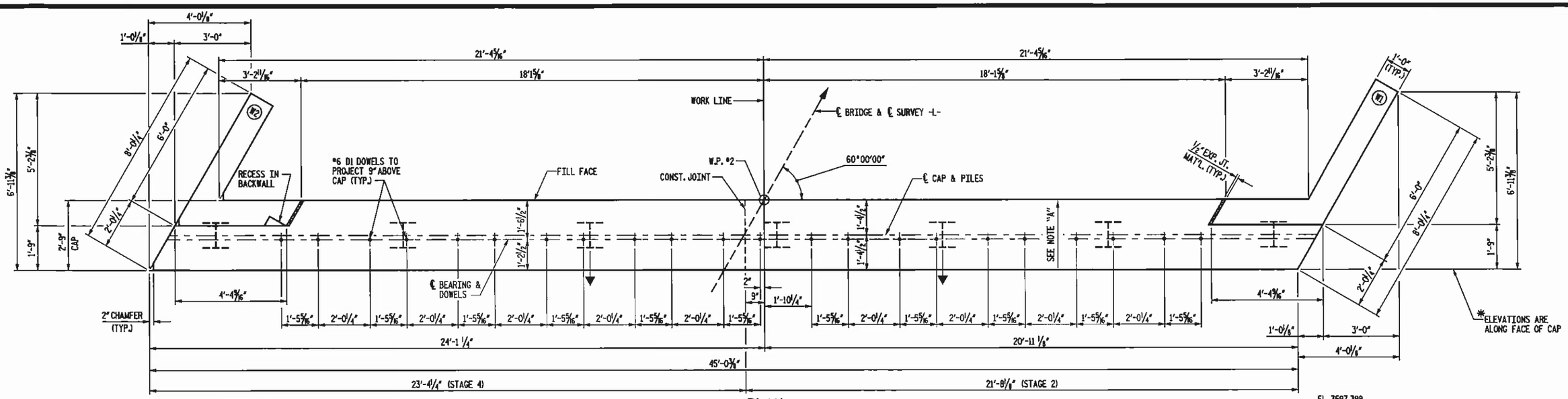

PLAN

NOTE "A":
THE TOP SURFACE OF THE END BENT CAP SHALL BE SLOPED DOWN TRANSVERSELY FROM THE BACK FACE TO THE FILL FACE AT THE RATE OF 0.040 FT. PER FOOT.

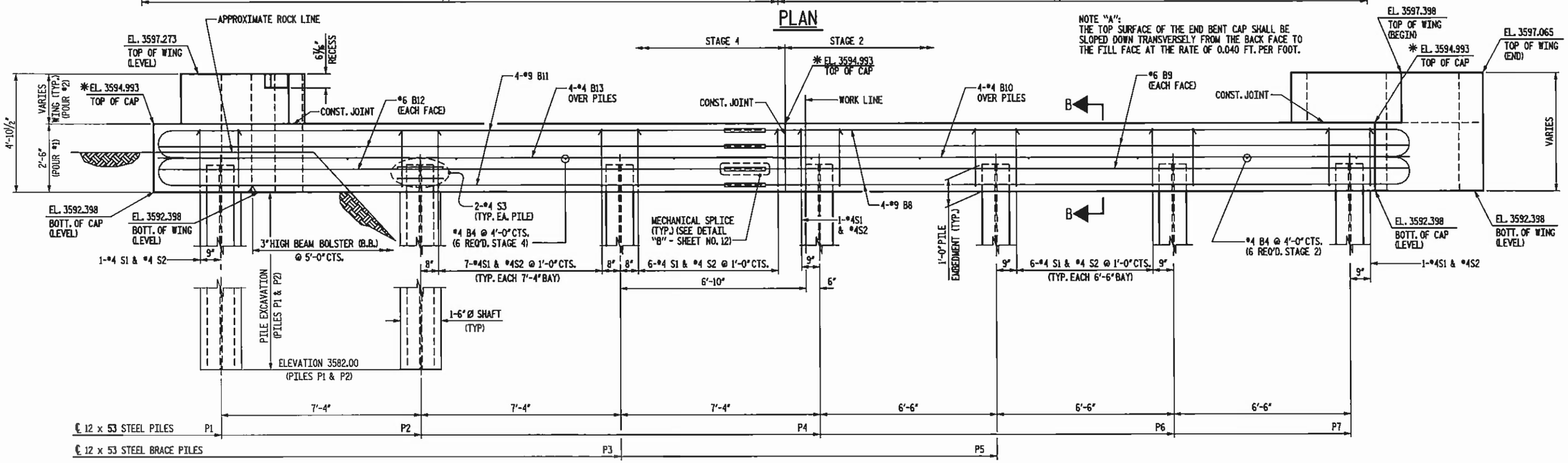

ELEVATION

INDICATES BRACE PILE (BATTER: 3:12)

NOTES:

STIRRUPS IN CAP MAY BE SHIFTED SLIGHTLY AS NECESSARY TO CLEAR DOWELS.

NOT TO SCALE

PROJECT NO. 42824
COUNTY: WATAUGA
STATION: 16+11.00
REPLACES BRIDGE NO. 37

STATE OF NORTH CAROLINA
DEPARTMENT OF TRANSPORTATION
RALEIGH

CAST - IN - PLACE
END BENT NO. 2

Florence & Hutcheson
CONSULTING ENGINEERS
5121 Kingdom Way, Suite 100 Raleigh, NC 27607
NC License No. F-0268

NORTH CAROLINA PROFESSIONAL SEAL 20532 JAMES E. MONDOR
3-7-11

REVISIONS								SHEET NO.
NO.	BY	DATE	NO.	BY	DATE			8
1			3					TOTAL SHEETS
2			4					29

DRAWN BY: C.L. SMITH DATE: NOV 2010
CHECKED BY: J.C. KO DATE: NOV 2010

PLOT: 3/4/2011 18MB48 ## Florence & Hutcheson, Inc.
FILE NAME: p:\proj\d-5\bridge_37\dist\BEB\brsurvey\37_dist_EB2.dgn

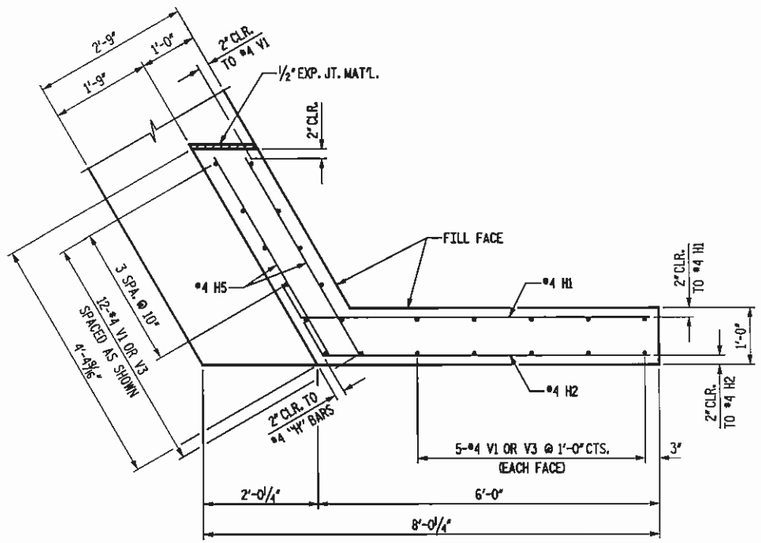

PLAN OF WING - W1

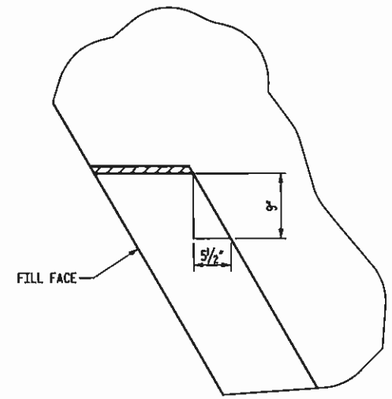

DETAIL OF RECESS IN TOP OF BACKWALL AT WING W2

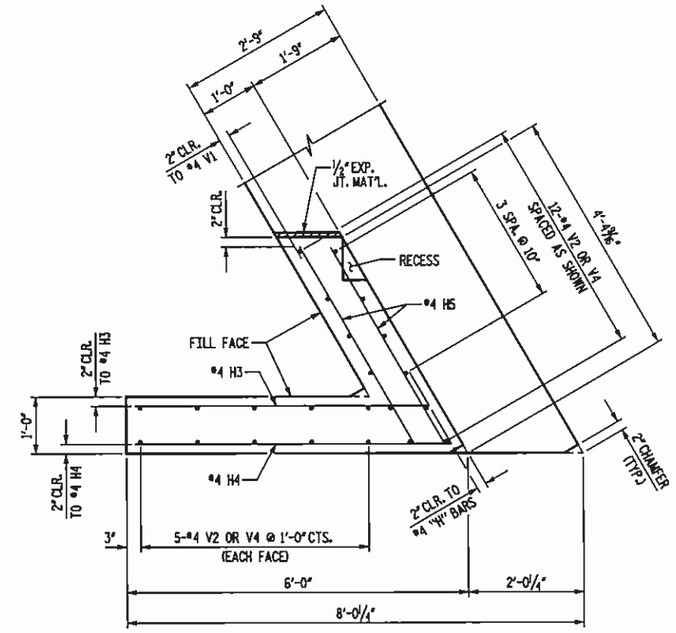

PLAN OF WING - W2

NOTE:
SHIFT, FIELD BEND OR CUT REINFORCING STEEL AS NECESSARY TO CLEAR RECESS IN TOP OF BACKWALL.

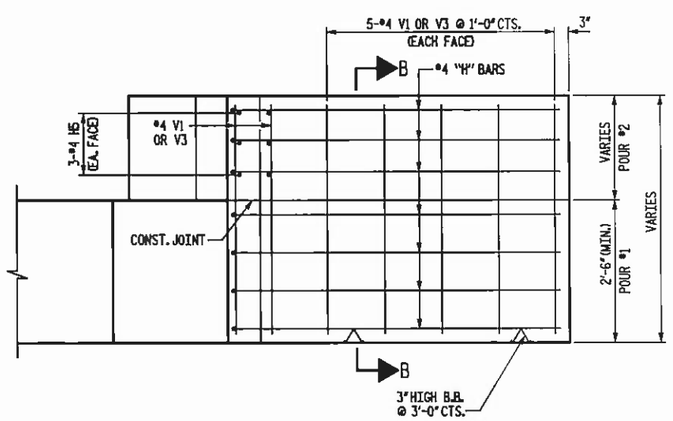

ELEVATION OF WING - W1

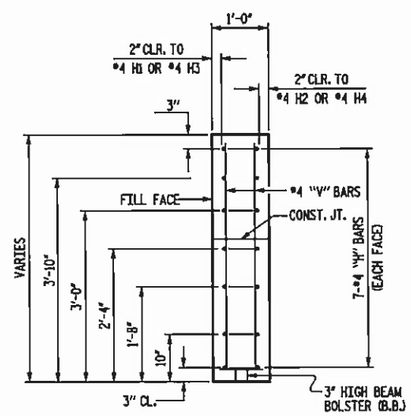

SECTION B-B

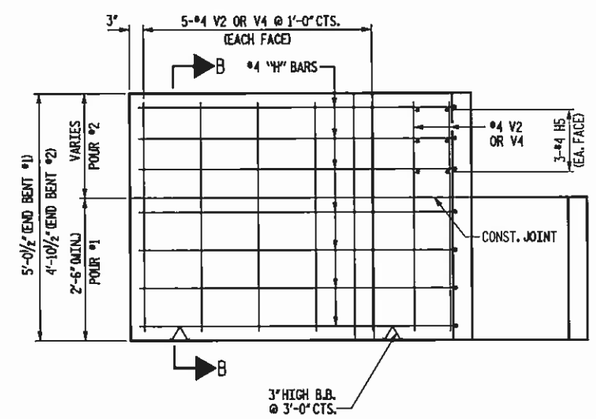

ELEVATION OF WING - W2

NOT TO SCALE

PROJECT NO. 42824
COUNTY: WATAUGA
STATION: 16+11.00
REPLACES BRIDGE NO. 37

STATE OF NORTH CAROLINA
DEPARTMENT OF TRANSPORTATION
RALEIGH

CAST - IN - PLACE
END BENT NO. 1 & 2 DETAILS

Florence & Hutcheson
CONSULTING ENGINEERS
5121 Kingdom Way, Suite 100 Raleigh, NC 27607
NC License No: F-0258

NORTH CAROLINA PROFESSIONAL SEAL 20532 JAMES E. MONDUCHAK
3-7-11

REVISIONS						SHEET NO.
NO.	BY	DATE	NO.	BY	DATE	9
1			3			TOTAL SHEETS
2			4			29

DRAWN BY: C.L. SMITH DATE: NOV 2010
CHECKED BY: J.C. KO DATE: NOV 2010

PLOT: 3/4/2011 BMPS=3 ##1 Florence & Hutcheson, Inc.
FILE NAME: p:\Cross\h-01\watauga_37\wa37BR01\references\h37_ab03_V8.dgn

BAR TYPES

ALL BAR DIMENSIONS ARE OUT TO OUT

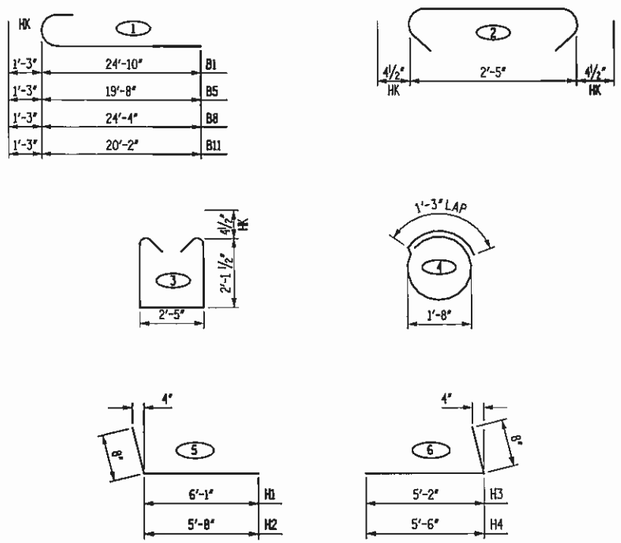

BILL OF MATERIAL

END BENT #1 - STAGE 2

BAR	NO.	SIZE	TYPE	LENGTH	WEIGHT
B1	8	9	1	26'-1"	709
B2	4	6	STR	24'-10"	149
B3	4	4	STR	25'-6"	68
B4	6	4	STR	2'-5"	10
D1	11	6	STR	1'-6"	25
H3	7	4	6	5'-10"	27
H4	7	4	6	6'-2"	29
H5	6	4	STR	3'-11"	16
S1	20	4	3	7'-5"	99
S2	20	4	2	3'-2"	42
S3	8	4	4	6'-6"	35
V1	22	4	STR	4'-8"	69

REINFORCING STEEL TOTAL 1,278 LBS.

CLASS "A" CONCRETE
POUR 1 6.3 CYS.
POUR 2 0.8 CYS.
TOTAL 7.1 CYS.

END BENT #1 - STAGE 4

BAR	NO.	SIZE	TYPE	LENGTH	WEIGHT
B5	8	9	1	20'-11"	569
B6	4	6	STR	19'-8"	118
B7	4	4	STR	21'-6"	57
B8	6	4	STR	2'-5"	10
D1	11	6	STR	1'-6"	25
H1	7	4	5	6'-9"	32
H2	7	4	5	6'-4"	30
H5	6	4	STR	3'-11"	16
S1	21	4	3	7'-5"	104
S2	21	4	2	3'-2"	44
S3	6	4	4	6'-6"	26
V2	22	4	STR	4'-8"	69

REINFORCING STEEL TOTAL 1,100 LBS.

CLASS "A" CONCRETE
POUR 1 6.3 CYS.
POUR 2 0.8 CYS.
TOTAL 7.1 CYS.

PILE EXCAVATION IN SOIL-LIN. FEET 6

PILE EXCAVATION NOT IN SOIL-LIN. FEET 14

END BENT #2 - STAGE 2

BAR	NO.	SIZE	TYPE	LENGTH	WEIGHT
B8	8	9	1	25'-7"	696
B9	4	6	STR	24'-4"	146
B10	4	4	STR	25'-0"	67
B4	6	4	STR	2'-5"	10
D1	11	6	STR	1'-6"	25
H1	7	4	5	6'-9"	32
H2	7	4	5	6'-4"	30
H5	6	4	STR	3'-11"	16
S1	20	4	3	7'-5"	99
S2	20	4	2	3'-2"	42
S3	8	4	4	6'-6"	35
V3	22	4	STR	4'-4"	64

REINFORCING STEEL TOTAL 1,262 LBS.

CLASS "A" CONCRETE
POUR 1 6.2 CYS.
POUR 2 0.8 CYS.
TOTAL 7.0 CYS.

END BENT #2 - STAGE 4

BAR	NO.	SIZE	TYPE	LENGTH	WEIGHT
B11	8	9	1	21'-5"	583
B12	4	6	STR	20'-2"	121
B13	4	4	STR	22'-0"	59
B4	6	4	STR	2'-5"	10
D1	11	6	STR	1'-6"	25
H3	7	4	6	5'-10"	27
H4	7	4	6	6'-2"	29
H5	6	4	STR	3'-11"	16
S1	21	4	3	7'-5"	104
S2	21	4	2	3'-2"	44
S3	6	4	4	6'-6"	26
V4	22	4	STR	4'-6"	66

REINFORCING STEEL TOTAL 1,110 LBS.

CLASS "A" CONCRETE
POUR 1 6.2 CYS.
POUR 2 0.8 CYS.
TOTAL 7.0 CYS.

PILE EXCAVATION IN SOIL-LIN. FEET 5

PILE EXCAVATION NOT IN SOIL-LIN. FEET 15

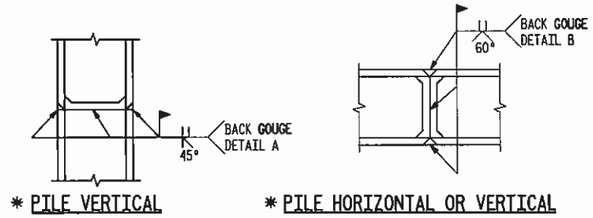

* PILE VERTICAL

* PILE HORIZONTAL OR VERTICAL

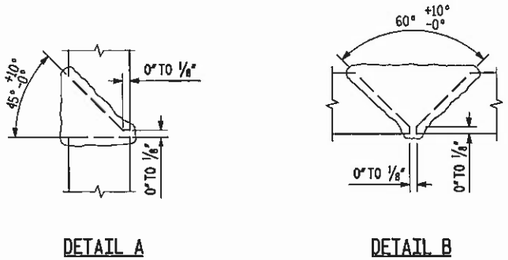

DETAIL A

DETAIL B

* POSITION OF PILE DURING WELDING

PILE SPLICE DETAILS

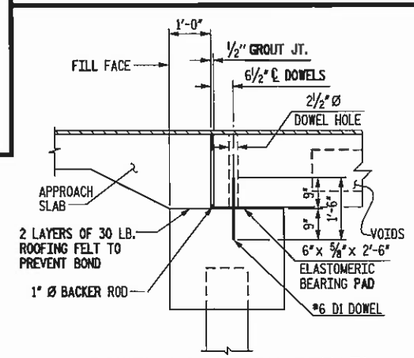

DOWEL LOCATION DETAIL

NOTE: ℄ OF DOWELS SHALL MATCH ℄ OF DOWEL HOLES IN CORED SLAB UNITS.

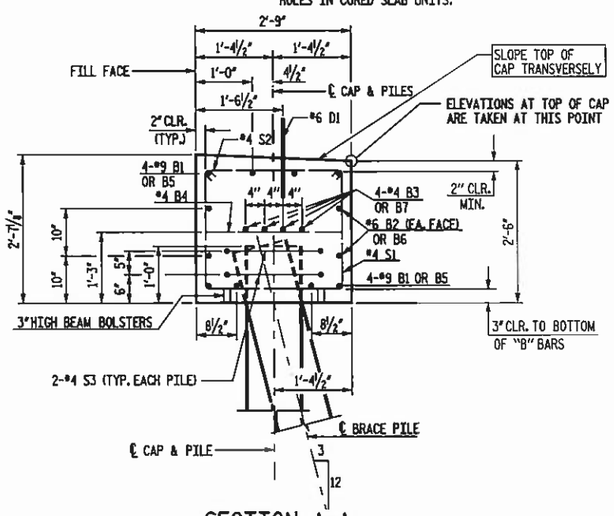

SECTION A-A

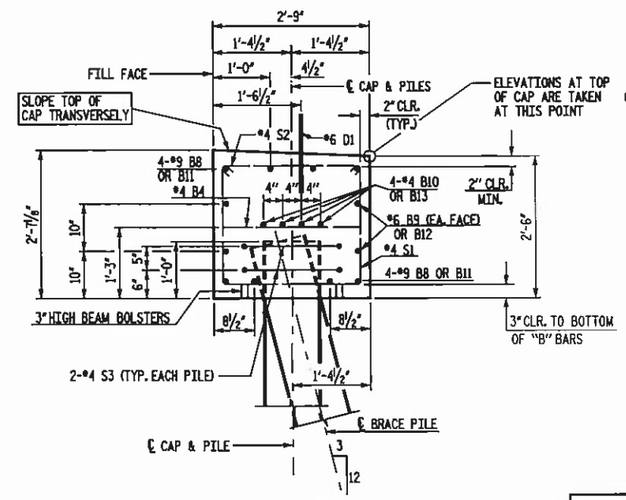

SECTION B-B

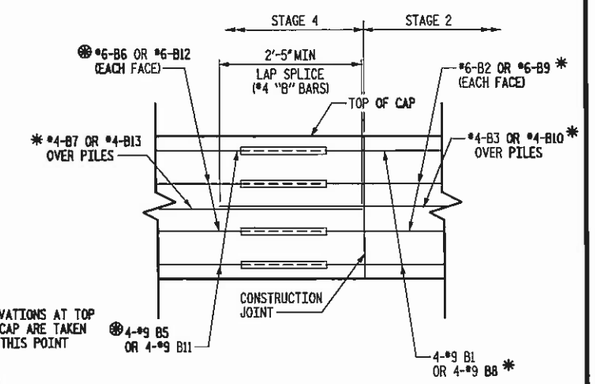

DETAIL "B"

* EXTEND ALL BARS IN STAGE 2 1'-6" MIN. BEYOND CONST. JOINT

⊛ PLACE ALL BARS IN STAGE 4 AT OR NEAR THE END OF BARS EXTENDING FROM STAGE 2.

PROJECT NO. 42824
COUNTY: WATAUGA
STATION: 16+11.00
REPLACES BRIDGE NO. 37

STATE OF NORTH CAROLINA
DEPARTMENT OF TRANSPORTATION
RALEIGH

CAST - IN - PLACE
END BENT NO. 1 & 2
BILL OF MATERIAL

NOT TO SCALE

Florence & Hutcheson
CONSULTING ENGINEERS
5121 Kingdom Way, Suite 100 Raleigh, NC 27607
NC License No. F-0258

NORTH CAROLINA PROFESSIONAL SEAL 20532 ENGINEER JAMES E. MONTGOMERY
3-7-11

REVISIONS						SHEET NO.
NO.	BY	DATE	NO.	BY	DATE	10
1			3			TOTAL SHEETS
2			4			29

DRAWN BY: C.L. SMITH DATE: NOV 2010
CHECKED BY: J.C. KO DATE: NOV 2010

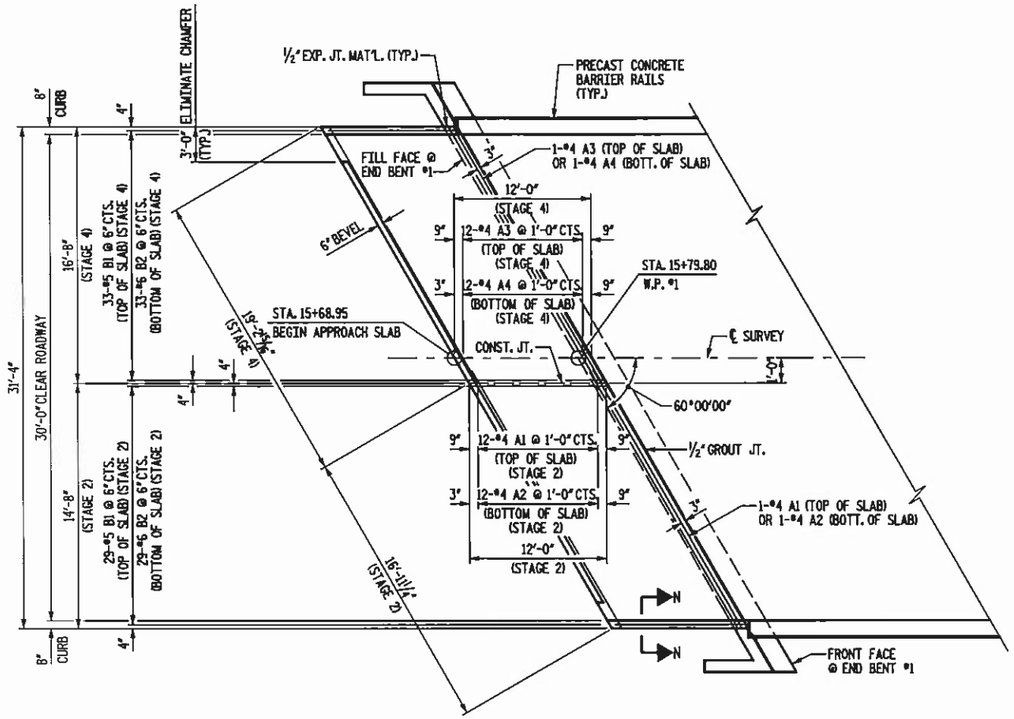

AT END BENT #1

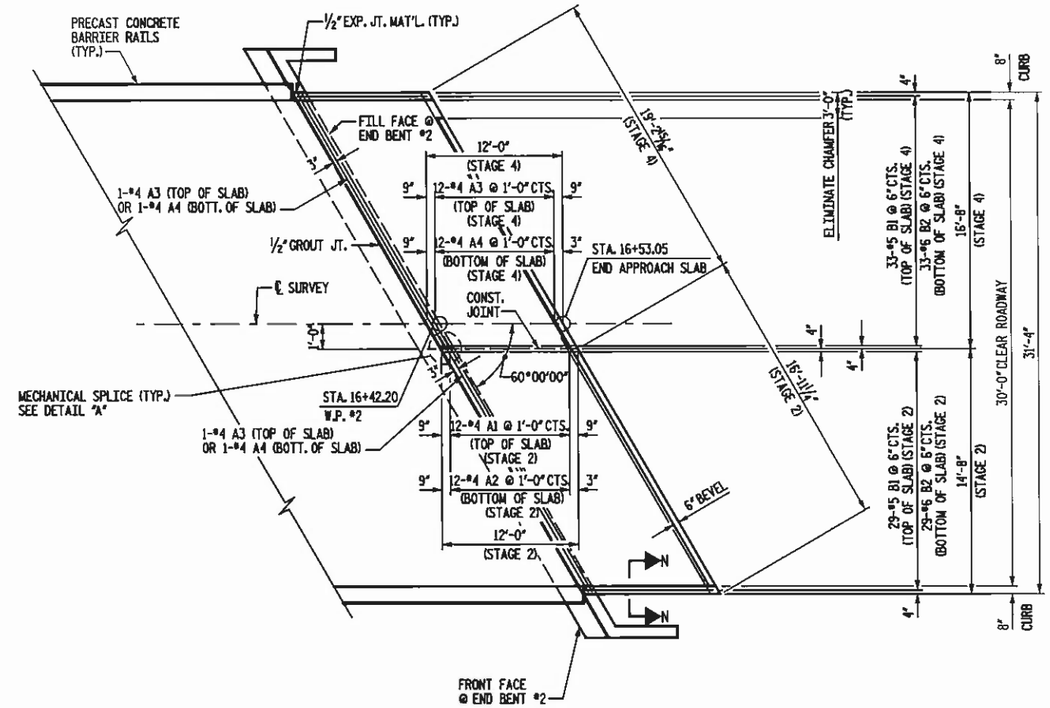

AT END BENT #2

PLAN OF APPROACH SLABS

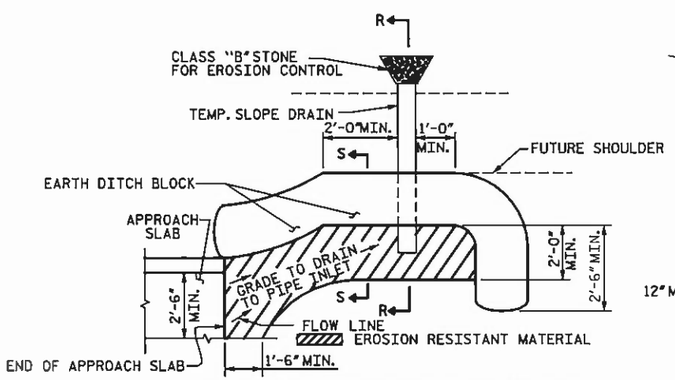

NOTE: IMMEDIATELY AFTER THE CONSTRUCTION OF THE APPROACH SLAB, THE CONTRACTOR SHALL PROVIDE TEMPORARY BERM AND SLOPE DRAIN. CONTRACTOR SHALL GRADE TO PIPE INLET AND PROVIDE EROSION RESISTANT MATERIAL AS SHOWN. THE EROSION RESISTANT MATERIAL SHALL BE EITHER 1) ASPHALT PLANT MIX, TYPE 1 OR TYPE 2, MIN. 2" DEPTH, 2) EROSION CONTROL MAT, OR 3) CONCRETE, AS DIRECTED BY THE ENGINEER. THE SLOPE DRAIN SHALL CONSIST OF A NON-PERFORATED TEMPORARY DRAINAGE PIPE, 12 INCHES IN DIAMETER.

PLAN VIEW

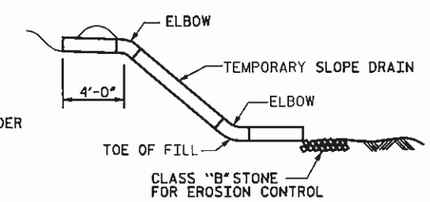

SECTION R-R

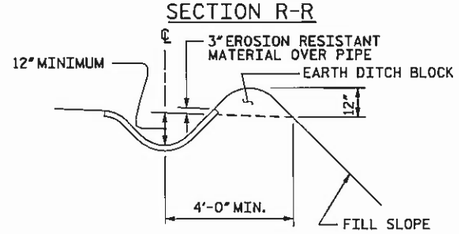

SECTION S-S

TEMPORARY BERM AND SLOPE DRAIN DETAILS

(TO BE USED WHEN SHOULDER BERM GUTTER IS REQUIRED)

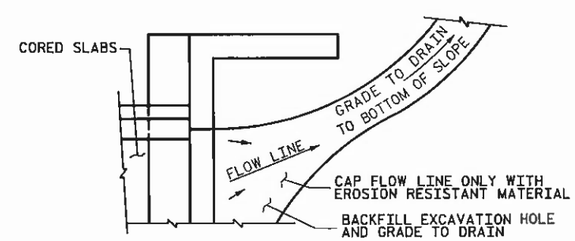

NOTE: IF THE APPROACH SLAB IS NOT CONSTRUCTED IMMEDIATELY AFTER THE BACKFILLING OF THE END BENT EXCAVATION, GRADE TO DRAIN TO THE BOTTOM OF THE SLOPE AND PROVIDE EROSION RESISTANT MATERIAL, SUCH AS FIBERGLASS ROVING OR AS DIRECTED BY THE ENGINEER TO PREVENT SOIL EROSION AND TO PROTECT THE AREA ADJACENT TO THE STRUCTURE. THE CONTRACTOR WILL BE REQUIRED TO REMOVE THESE MATERIALS PRIOR TO CONSTRUCTION OF THE APPROACH SLAB.

TEMPORARY DRAINAGE DETAIL

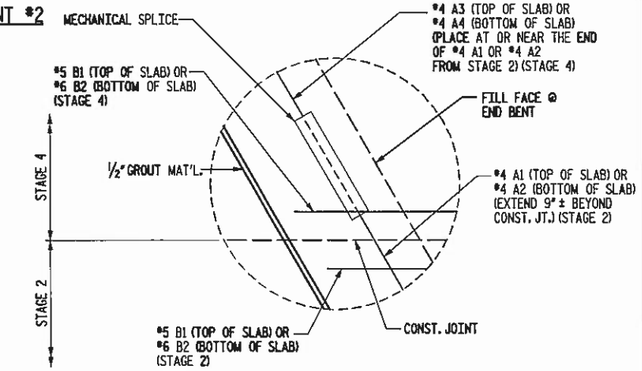

DETAIL "A"

PROJECT NO. 42824
COUNTY: WATAUGA
STATION: 16+11.00
REPLACES BRIDGE NO. 37

STATE OF NORTH CAROLINA
DEPARTMENT OF TRANSPORTATION
RALEIGH

APPROACH SLAB
30'-0" CLEAR ROADWAY
60° SKEW

NOT TO SCALE

Florence & Hutcheson
CONSULTING ENGINEERS
5121 Kingdom Way, Suite 100 Raleigh, NC 27607
NC License No. F-0258

NORTH CAROLINA PROFESSIONAL SEAL 20532 ENGINEER
3-7-11

REVISIONS						SHEET NO.
NO.	BY	DATE	NO.	BY	DATE	11
1			3			TOTAL SHEETS
2			4			29

DRAWN BY: G.L. SMITH DATE: NOV 2010
CHECKED BY: J.C. KO DATE: NOV 2010

BILL OF MATERIAL

END BENT #1 - STAGE 2

BAR	NO.	SIZE	TYPE	LENGTH	WEIGHT
✱A1	13	#4	STR	17'-6"	152
A2	13	#4	STR	17'-6"	152
✱B1	29	#5	STR	11'-1"	335
B2	29	#6	STR	11'-7"	505
REINFORCING STEEL				LBS.	657
✱EPOXY COATED REINFORCING STEEL				LBS.	487
CLASS AA CONCRETE				C.Y.	7.5

END BENT #1 - STAGE 4

BAR	NO.	SIZE	TYPE	LENGTH	WEIGHT
✱A3	13	#4	STR	18'-0"	156
A4	13	#4	STR	18'-0"	156
✱B1	33	#5	STR	11'-1"	381
B2	33	#6	STR	11'-7"	574
REINFORCING STEEL				LBS.	730
✱EPOXY COATED REINFORCING STEEL				LBS.	537
CLASS AA CONCRETE				C.Y.	8.5

END BENT #2 - STAGE 2

BAR	NO.	SIZE	TYPE	LENGTH	WEIGHT
✱A1	13	#4	STR	17'-6"	152
A2	13	#4	STR	17'-6"	152
✱B1	29	#5	STR	11'-1"	335
B2	29	#6	STR	11'-7"	505
REINFORCING STEEL				LBS.	657
✱EPOXY COATED REINFORCING STEEL				LBS.	487
CLASS AA CONCRETE				C.Y.	7.5

END BENT #2 - STAGE 4

BAR	NO.	SIZE	TYPE	LENGTH	WEIGHT
✱A3	13	#4	STR	18'-0"	156
A4	13	#4	STR	18'-0"	156
✱B1	33	#5	STR	11'-1"	381
B2	33	#6	STR	11'-7"	574
REINFORCING STEEL				LBS.	730
✱EPOXY COATED REINFORCING STEEL				LBS.	537
CLASS AA CONCRETE				C.Y.	8.5

NOTES

FOR BRIDGE APPROACH FILL INCLUDING FABRIC, 4" Ø DRAINAGE PIPE, AND #78M STONE BACKFILL, SEE BRIDGE APPROACH FILLS, SHEET 13.

APPROACH SLAB SHALL NOT BE CONSTRUCTED PRIOR TO INSTALLATION OF CORED SLABS.

FABRIC SHALL BE TYPE 1 ENGINEERING FABRIC IN ACCORDANCE WITH THE STANDARD SPECIFICATIONS SECTION 1056.

#78M STONE BACKFILL (CLASS V SELECT MATERIAL) SHALL BE IN ACCORDANCE WITH STANDARD SPECIFICATIONS SECTION 1016.

#78M STONE BACKFILL IS TO BE CONTINUOUS ALONG FILL FACE OF END BENT CAP FROM OUTSIDE EDGE TO OUTSIDE EDGE OF APPROACH SLAB.

FOR THE 4" Ø DRAINAGE PIPE OUTLET(S), SEE BRIDGE APPROACH FILLS, SHEET 13.

AREA BETWEEN THE WINGWALL AND APPROACH SLAB SHALL BE GRADED TO DRAIN THE WATER AWAY FROM THE FILL FACE OF THE BRIDGE AND SHALL BE PAVED.

THE 6" COMP. A.B.C. SHALL BE FLUSH WITH THE ROADWAY END OF THE APPROACH SLAB AND SHALL BE FLUSH WITH EACH EDGE OF THE APPROACH SLAB.

THE CONTRACTOR MAY USE 4" TYPE B-25.0B ASPHALT CONCRETE BASE COURSE IN LIEU OF 6" COMP. A.B.C. IF THIS OPTION IS USED, THE BASE COURSE SHALL BE FLUSH WITH THE ROADWAY END OF THE APPROACH SLAB, AND THE WIDTH SHALL BE THE SAME AS THAT OF THE APPROACH SLAB.

THE CONTRACTOR MAY USE 5" CLASS "A" CONCRETE BASE IN LIEU OF 6" COMP. A.B.C. IF THIS OPTION IS USED, THE CONCRETE BASE SHALL BE FLUSH WITH THE ROADWAY END OF THE APPROACH SLAB, AND THE WIDTH SHALL BE THE SAME AS THAT OF THE APPROACH SLAB. THE CONCRETE SHALL BE FINISHED TO A SMOOTH SURFACE AND A LAYER OF 30 LB ROOFING FELT SHALL BE PLACED BETWEEN THE CONCRETE BASE AND THE APPROACH SLAB TO PREVENT BOND. THE APPROACH SLAB SHALL NOT BE CAST UNTIL THE CONCRETE BASE HAS REACHED AN AGE OF THREE CURING DAYS.

FOR JOINT DETAILS, SEE "PRESTRESSED CONCRETE CORED SLAB UNIT" SHEET.

THE JOINT AT THE END BENT SHALL BE GROUTED AS SOON AS PRACTICAL AFTER THE CONSTRUCTION OF THE APPROACH SLABS.

APPROACH SLAB GROOVING IS NOT REQUIRED.

#78 STONE BACKFILL, 4" Ø DRAINAGE PIPE AND FABRIC SHALL BE INCLUDED IN THE LUMP SUM PRICE BID FOR APPROACH SLABS.

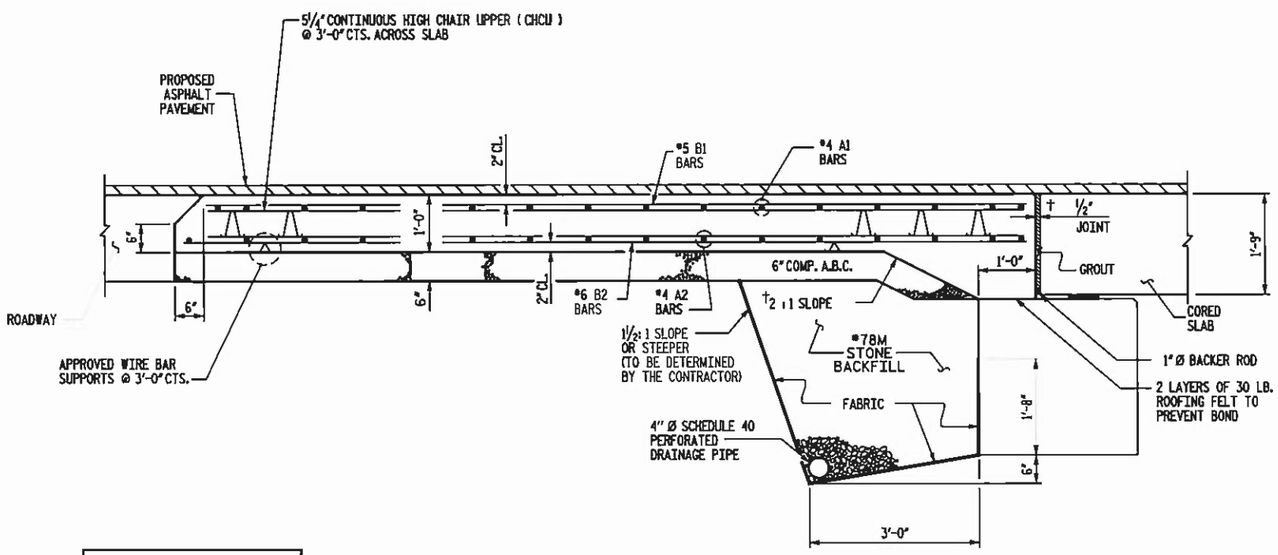

† NORMAL TO END BENT

SECTION THRU SLAB

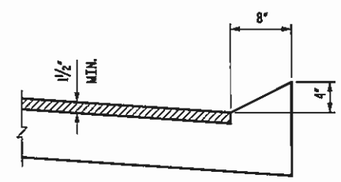

SECTION N-N

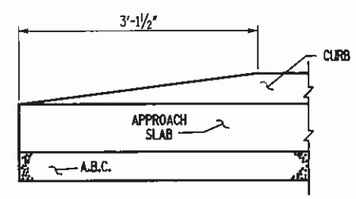

END OF CURB WITHOUT SHOULDER BERM GUTTER

CURB DETAILS

PROJECT NO. 42824
COUNTY: WATAUGA
STATION: 16+11.00
REPLACES BRIDGE NO. 37

STATE OF NORTH CAROLINA
DEPARTMENT OF TRANSPORTATION
RALEIGH

APPROACH SLAB
30'-0" CLEAR ROADWAY
60° SKEW

NOT TO SCALE

Florence & Hutcheson
CONSULTING ENGINEERS
5121 Kingdom Way, Suite 100 Raleigh, NC 27607
NC License No. F-0258

NORTH CAROLINA PROFESSIONAL SEAL 20532 ENGINEER JAMES E. MONDOU
3-7-11

REVISIONS						SHEET NO.
NO.	BY	DATE	NO.	BY	DATE	12
1			3			TOTAL SHEETS
2			4			29

DRAWN BY: C.L. SMITH DATE: NOV 2010
CHECKED BY: J.C. KO DATE: NOV 2010

PLOT: 3/4/2011

26-JUN-2008 15:32
s:\contracts\specprocts\special details\kkempf\english\bridge approach fill.dgn
kkempf AT PS237485

STATE OF NORTH CAROLINA
DEPT. OF TRANSPORTATION
DIVISION OF HIGHWAYS
RALEIGH, N.C.

ENGLISH DETAIL DRAWING FOR
BRIDGE APPROACH FILLS
CORED SLAB & BOX BEAM BRIDGES
SUB REGIONAL TIER

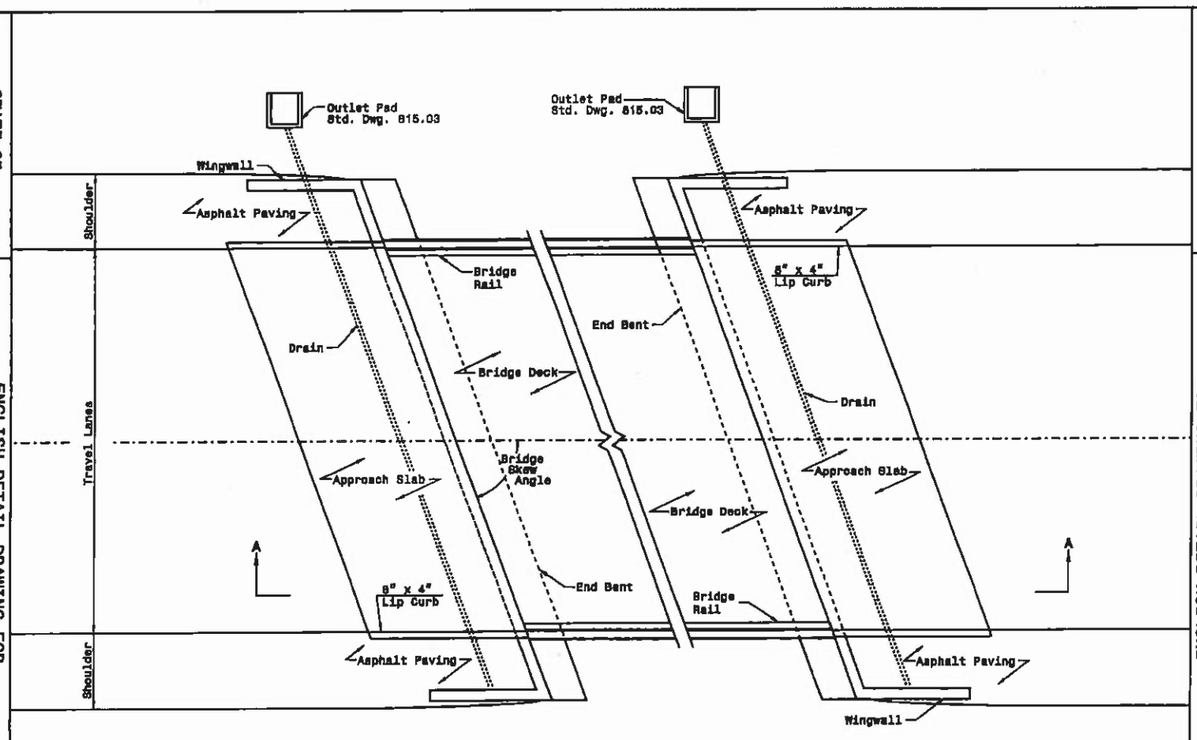

PLAN VIEW
12' APPROACH SLAB

SHEET 1 OF 2
422D11

STATE OF NORTH CAROLINA
DEPT. OF TRANSPORTATION
DIVISION OF HIGHWAYS
RALEIGH, N.C.

ENGLISH DETAIL DRAWING FOR
BRIDGE APPROACH FILLS
CORED SLAB & BOX BEAM BRIDGES
SUB REGIONAL TIER

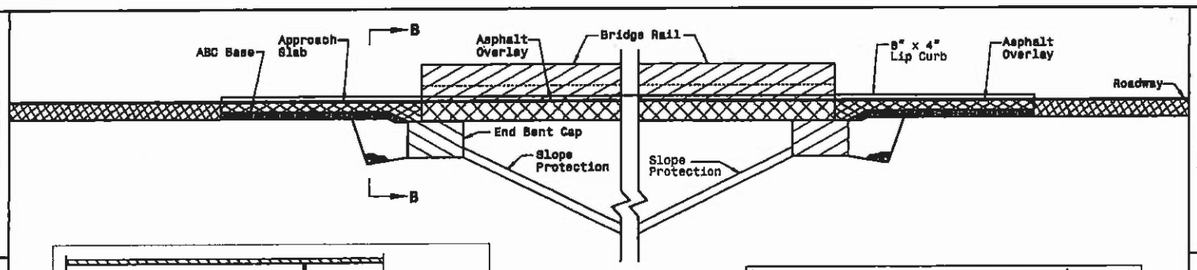

SECTION A-A

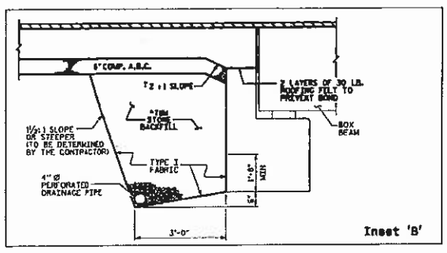

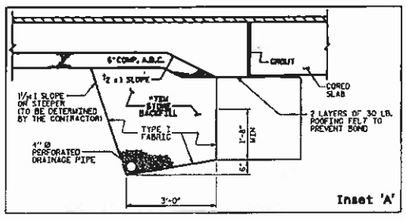

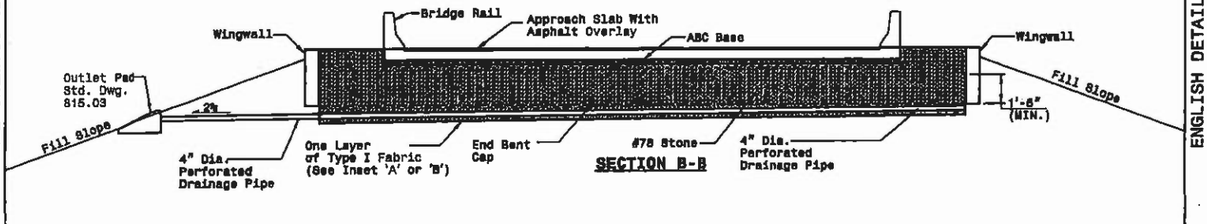

SECTION B-B

12' APPROACH SLAB

SHEET 2 OF 2
422D11

STATE OF NORTH CAROLINA
DEPT. OF TRANSPORTATION
DIVISION OF HIGHWAYS
RALEIGH, N.C.

ENGLISH DETAIL DRAWING FOR
BRIDGE APPROACH FILLS
CORED SLAB & BOX BEAM BRIDGES
SUB REGIONAL TIER

PROJECT SERVICES UNIT
STANDARDS AND SPECIAL DESIGN
Office 919-250-4128 FAX 919-250-4119

BRIDGE APPROACH FILLS
CORED SLAB & BOX BEAM BRIDGES
SUB REGIONAL TIER

ORIGINAL BY: K. A. Kempf DATE: 6-10-08
MODIFIED BY: DATE:
CHECKED BY: DATE:
FILE SPEC.: s:\contracts\specprocts\special details\kkempf\english\bridge approach fill.dgn

NORTH CAROLINA PROFESSIONAL SEAL 12581 ENGINEER
11/4/08

PROJECT REFERENCE NO. B-5226
SHEET NO. 13

PROJECT REFERENCE NO.	SHEET NO.
B-5226	
R/W SHEET NO.	

ROADWAY DESIGN ENGINEER — NORTH CAROLINA PROFESSIONAL SEAL 22606 ENGINEER DAVID C. WALLER 3-3-11

HYDRAULICS ENGINEER — NORTH CAROLINA PROFESSIONAL SEAL 20253 ENGINEER R. KEVIN WILLIAMS 3-3-11

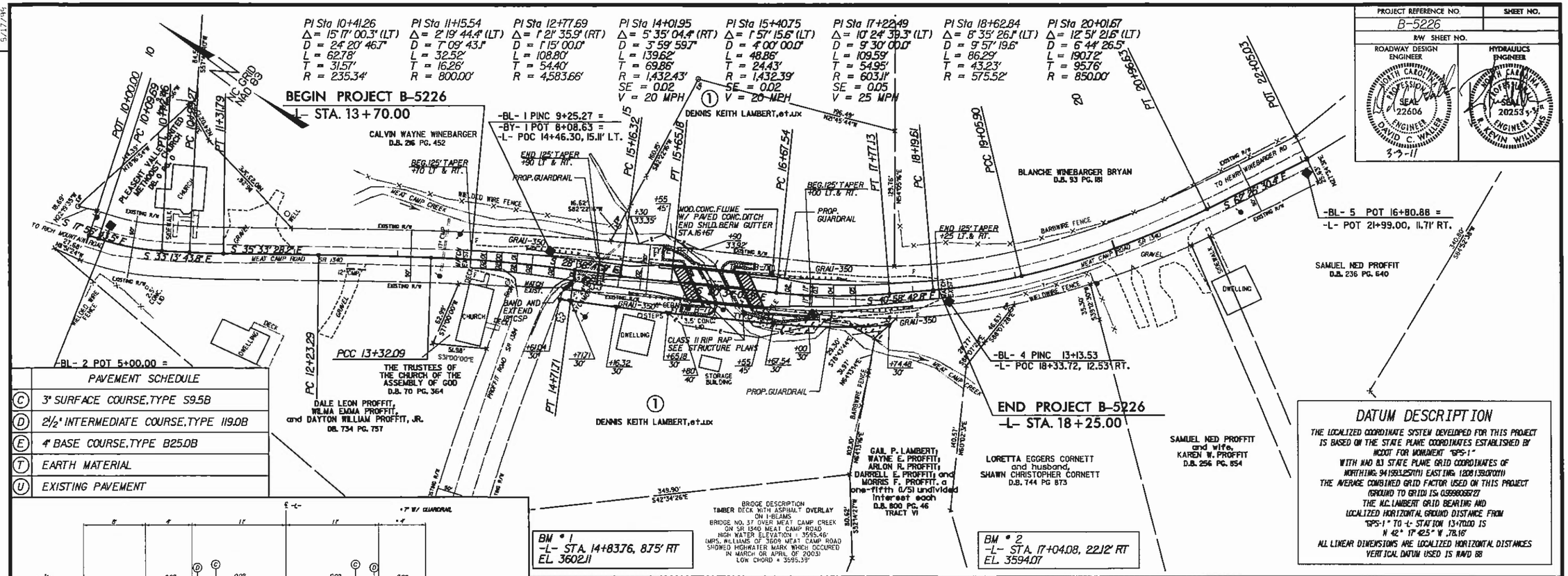

	PAVEMENT SCHEDULE
C	3" SURFACE COURSE, TYPE S9.5B
D	2½" INTERMEDIATE COURSE, TYPE I19.0B
E	4" BASE COURSE, TYPE B25.0B
T	EARTH MATERIAL
U	EXISTING PAVEMENT

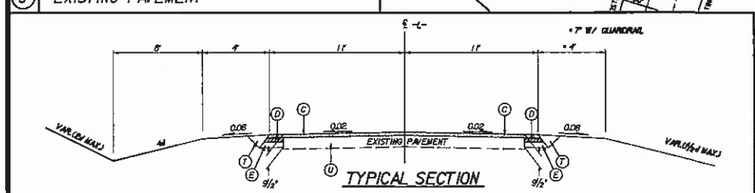

RIGHT OF WAY AREA DATA

PARCEL NO.	PROPERTY OWNERS NAME	TOTAL ACREAGE	AREA TAKEN	AREA REMAINING RIGHT	AREA REMAINING LEFT	CONSTR. EASEMENT	PERMANENT DRAINAGE EASEMENT	TEMPORARY DRAINAGE EASEMENT
1	DENNIS KEITH LAMBERT, et.ux		3890 sf			1492 sf		

DATUM DESCRIPTION

THE LOCALIZED COORDINATE SYSTEM DEVELOPED FOR THIS PROJECT IS BASED ON THE STATE PLANE COORDINATES ESTABLISHED BY NCDOT FOR MONUMENT "GPS-1" WITH NAD 83 STATE PLANE GRID COORDINATES OF NORTHING: 941593.257(ft) EASTING: 1208139.070(ft) THE AVERAGE COMBINED GRID FACTOR USED ON THIS PROJECT (GROUND TO GRID) IS: 0.999806827 THE NC LAMBERT GRID BEARING AND LOCALIZED HORIZONTAL GROUND DISTANCE FROM "GPS-1" TO -L- STATION 13+70.00 IS N 42° 17' 42.5" W 78.16' ALL LINEAR DIMENSIONS ARE LOCALIZED HORIZONTAL DISTANCES VERTICAL DATUM USED IS NAVD 88

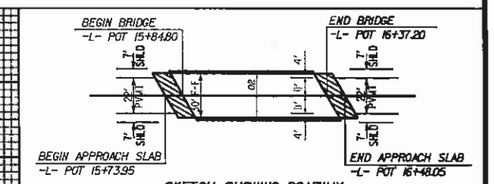

SKETCH SHOWING ROADWAY IN RELATION TO STRUCTURE

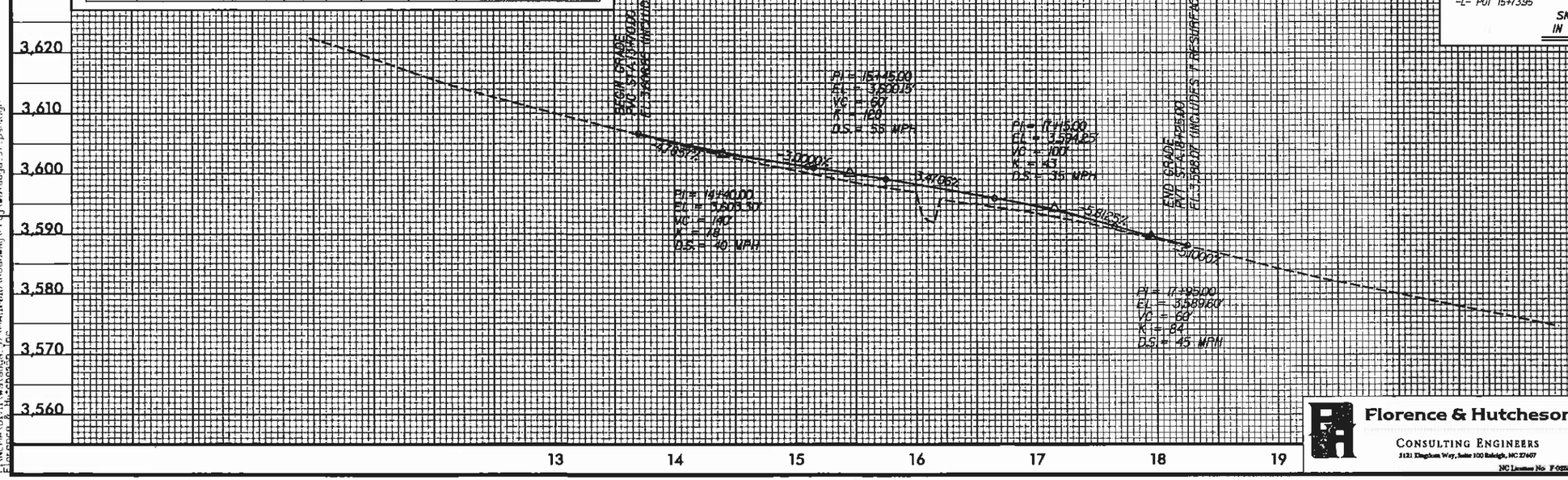

PROJECT NO. 42824
COUNTY: WATAUGA
STATION: 16+11.00
REPLACES BRIDGE NO. 37

STATE OF NORTH CAROLINA
DEPARTMENT OF TRANSPORTATION
RALEIGH

BRIDGE ON SR 1340
OVER MEAT CAMP CREEK

Florence & Hutcheson
CONSULTING ENGINEERS
5121 Kingdom Way, Suite 100 Raleigh, NC 27607
NC License No. F-0258

REVISIONS							SHEET NO.
NO.	BY	DATE	NO.	BY	DATE		14
1			3				TOTAL SHEETS
2			4				29

REVISIONS

5/17/99

3/3/2011
F:\NCMA\Dist11\Watauga_37\MAIN2018\Roadway\Proj\watauga_37_psh.dgn
FLORENCE & HUTCHESON

ENVIRONMENTALLY SENSITIVE AREA
SEE PROJECT SPECIAL PROVISIONS

NOTE:
UTILIZE SPECIAL STILLING BASIN AS STILLING BASIN WHERE APPLICABLE.

EROSION CONTROL PLAN

ROADSIDE ENVIRONMENTAL UNIT
DEPARTMENT OF TRANSPORTATION
DIVISION OF HIGHWAYS
RALEIGH, N.C.

2006 STANDARD SPECIFICATIONS

NOTES: ANY DEVIATION FROM OPTIONS GIVEN WILL REQUIRE PRIOR APPROVAL BY ENGINEER.

ADDITIONAL EROSION CONTROL DEVICES MAY NEED TO BE INSTALLED AS DIRECTED BY THE ENGINEER.

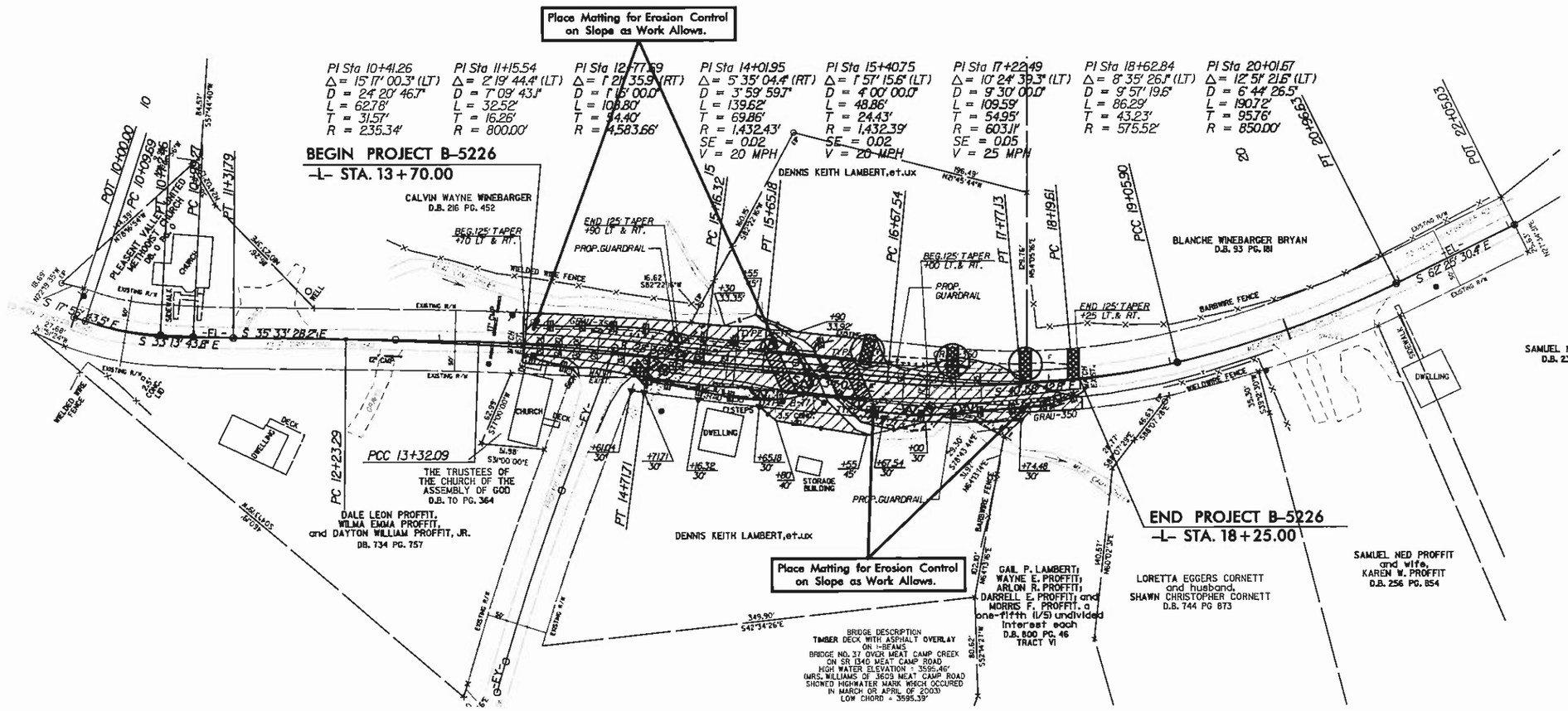

Std. #	Description	Symbol
1605.01	Temporary Silt Fence	
1606.01	Special Sediment Control Fence	
1607.01	Gravel Construction Entrance	
1622.01	Temporary Berms and Slope Drains	
1630.06	Special Stilling Basin	
1633.01	Temporary Rock Silt Check Type-A	
	Temporary Rock Silt Check Type-A with Matting and Polyacrylamide (PAM)	

PROJECT NO. 37022 (B-5226)
COUNTY: WATAUGA
STATION: 16+11.00
REPLACES BRIDGE NO. 37

EROSION CONTROL PLAN AND DETAILS ARE PROVIDED BY THE NCDOT ROADSIDE ENVIROMENTAL UNIT

STATE OF NORTH CAROLINA
DEPARTMENT OF TRANSPORTATION
RALEIGH

BRIDGE NO. 37 ON SR 1340
OVER MEAT CAMP CREEK

REVISIONS						SHEET NO.
NO.	BY	DATE	NO.	BY	DATE	15
1			3			TOTAL SHEETS
2			4			29

PLOT: DEPARTMENT HARRIS USER
FILE NAME: FILE ID

PROJECT REFERENCE NO.	SHEET NO.
B-5226	16
R/W SHEET NO.	
ROADWAY DESIGN ENGINEER	HYDRAULICS ENGINEER

TEMPORARY ROCK SILT CHECK TYPE 'A' WITH EXCELSIOR MATTING AND POLYACRYLAMIDE (PAM)

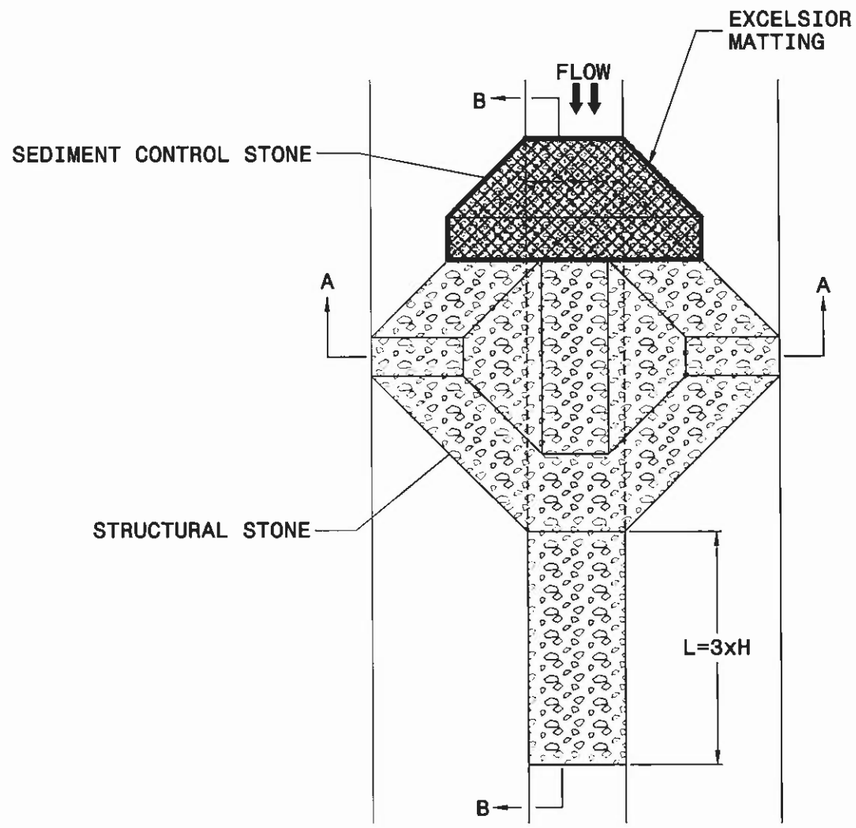

PLAN

NOTES

USE EXCELSIOR FOR MATTING MATERIAL AND ANCHOR MATTING SECTION AT TOP AND BOTTOM WITH CLASS B STONE.

PRIOR TO POLYACRYLAMIDE (PAM) APPLICATION, OBTAIN A SOIL SAMPLE FROM PROJECT LOCATION, AND FROM OFFSITE MATERIAL, AND ANALYZE FOR APPROPRIATE PAM FLOCCULANT TO BE APPLIED TO EACH ROCK SILT CHECK.

INITIALLY APPLY 3.5 OUNCES OF POLYACRYLAMIDE (PAM) TO TOP OF MATTING SECTION AND AFTER EVERY RAINFALL EVENT THAT EQUALS OR EXCEEDS 0.50 INCHES.

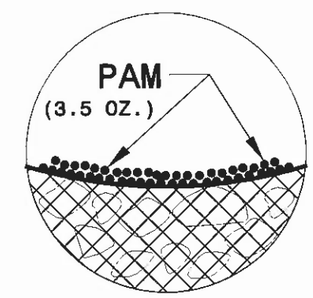

INSET A

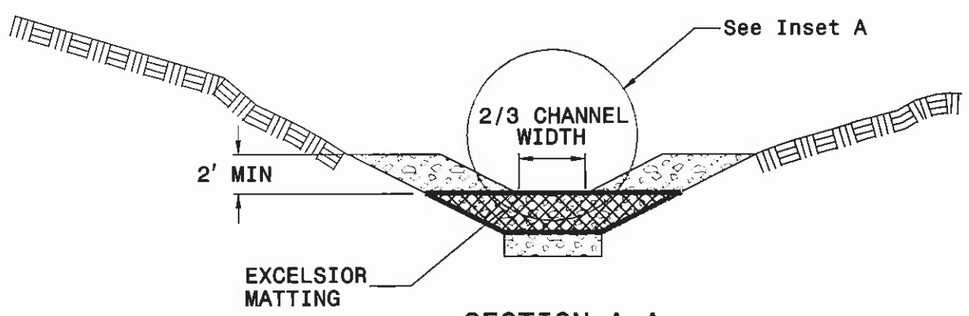

SECTION A-A

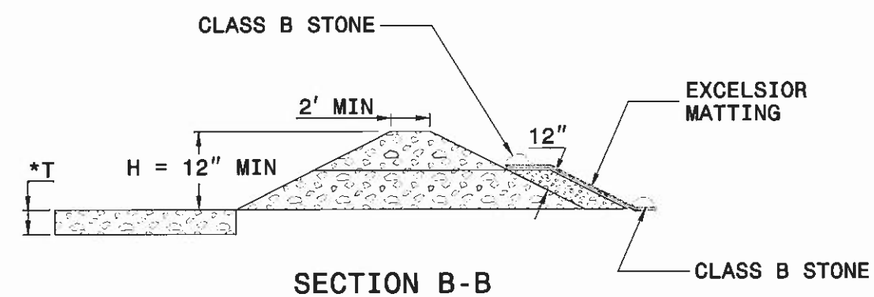

SECTION B-B

*T = 12" MIN., 18" MAX.

NOT TO SCALE

PROJECT REFERENCE NO.	SHEET NO.
B-5226	17
R/W SHEET NO.	
ROADWAY DESIGN ENGINEER	HYDRAULICS ENGINEER

MATTING INSTALLATION DETAIL

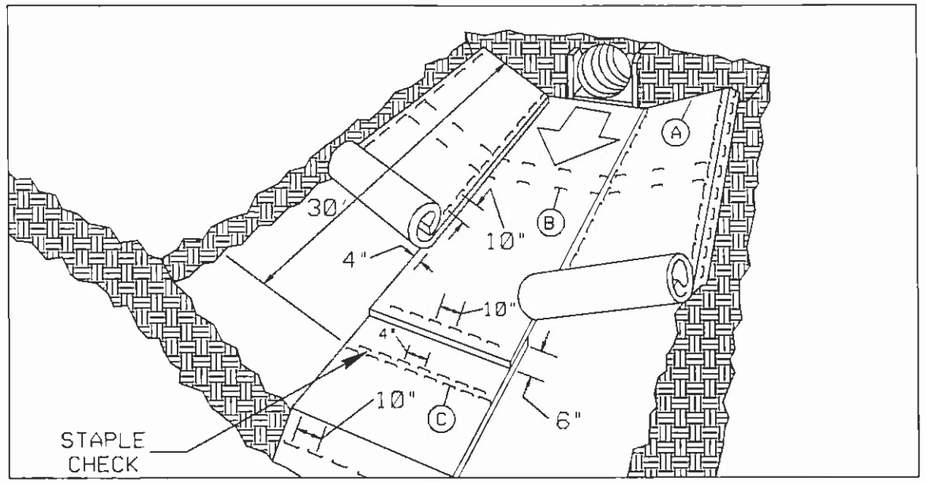

MATTING IN DITCHES

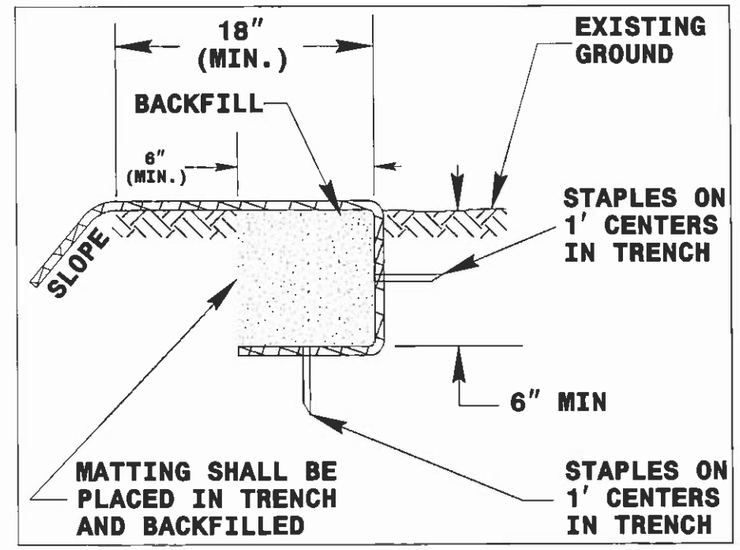

DIAGRAM (A)

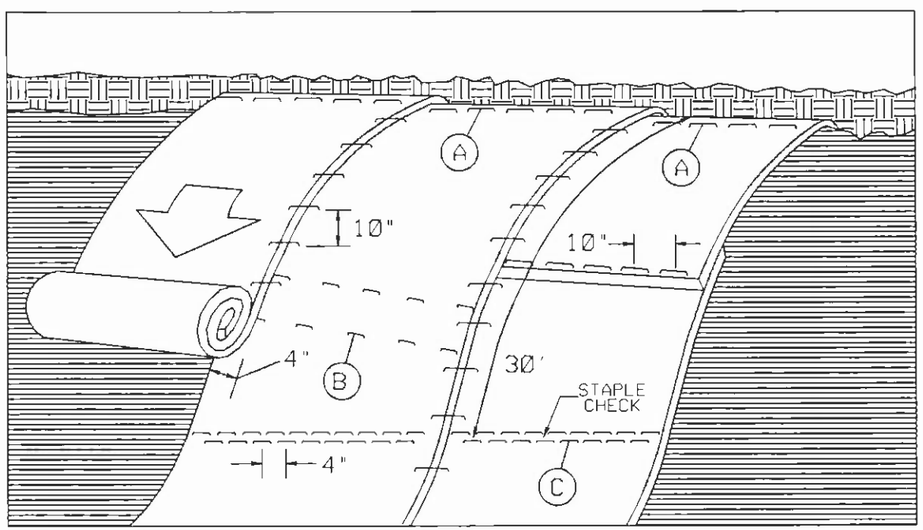

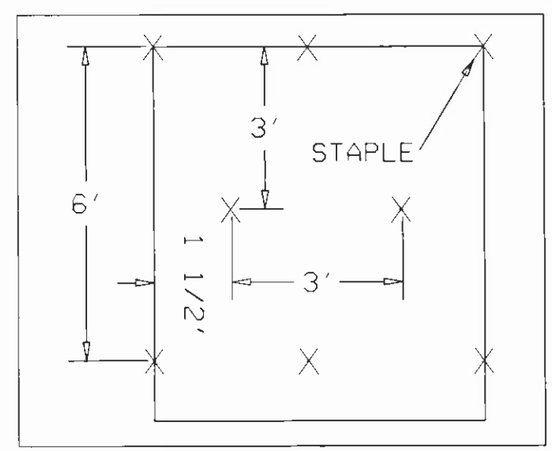

DIAGRAM (B)

STAPLE CHECK PATTERN

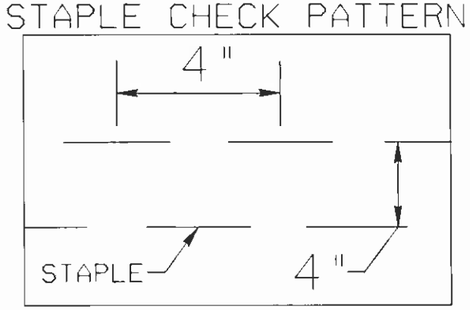

DIAGRAM (C)

NOTES:

THIS DETAIL APPLIES TO STRAW, EXCELSIOR, AND PERMANENT SOIL REINFORCEMENT MAT (PSRM) INSTALLATION.

STAPLES SHALL BE NO. 11 GAUGE STEEL WIRE FORMED INTO A "U" SHAPE WITH A MINIMUM THROAT WIDTH OF 1 INCH AND NOT LESS THAN 6 INCHES IN LENGTH.

NOT TO SCALE

PROJECT REFERENCE NO.	SHEET NO.
B-5226	
R/W SHEET NO.	

NORTH CAROLINA PROFESSIONAL SEAL 15876 ENGINEER MICHAEL T. KEEPER

3-7-11

ROADWAY STANDARD DRAWINGS

THE FOLLOWING ROADWAY STANDARDS AS APPEAR IN "ROADWAY STANDARD DRAWINGS"-ROADWAY DESIGN UNIT-N.C. DEPARTMENT OF TRANSPORTATION-RALEIGH, N.C., DATED JULY 2006 ARE APPLICABLE TO THIS PROJECT AND BY REFERENCE HEREBY ARE CONSIDERED A PART OF THESE PLANS:

STD. NO.	TITLE
1101.03	TEMPORARY ROAD CLOSURES
1101.04	TEMPORARY SHOULDER CLOSURES
1101.11	TRAFFIC CONTROL DESIGN TABLES
1110.01	STATIONARY WORK ZONE SIGNS
1110.02	PORTABLE WORK ZONE SIGNS
1130.01	DRUM
1145.01	BARRICADES
1150.01	FLAGGERS
1160.01	TEMPORARY CRASH CUSHION
1170.01	PORTABLE CONCRETE BARRIER
1180.01	SKINNY - DRUM
1205.01	PAVEMENT MARKINGS - LINE TYPES & OFFSETS
1205.02	PAVEMENT MARKINGS - 2 LANE & MULTILANE ROADWAYS
1205.12	PAVEMENT MARKINGS - BRIDGES
1250.01	PAVEMENT MARKER SPACING
1251.01	RAISED PAVEMENT MARKERS (TEMPORARY & PERMANENT)
1261.01	GUARDRAIL & BARRIER DELINEATOR SPACING
1261.02	GUARDRAIL & BARRIER DELINEATOR TYPES
1262.01	GUARDRAIL END DELINEATION

PAV'T MARKING SCHEDULE

SYMBOL	DESCRIPTION	QUANTITY BREAKDOWN	PAY ITEM	TOTAL QUANTITY
		PAVEMENT MARKING LINES		
			PAINT (4")	
PA	WHITE EDGELINE 2X	5,304 LF		
PI	YELLOW DOUBLE CENTER LINE 2X	2,252 LF		
			TOTAL	7,556 LF
			PAINT (24")	
P4	WHITE STOP BAR 2X	54 LF		
			TOTAL	54 LF
		PAVEMENT MARKERS (FINAL)		
			RAISED (PERMANENT)	
MA	YELLOW & YELLOW	6 EA		
			TOTAL	6 EA
		PAVEMENT MARKERS (TEMPORARY)		
			RAISED (TEMPORARY)	
MH	YELLOW & YELLOW	2 EA		
MP	CRYSTAL & CRYSTAL	92 EA		
			TOTAL	94 EA

INDEX OF SHEETS

SHEET NO.	TITLE
17	LIST OF APPLICABLE ROADWAY STANDARD DRAWINGS, LEGEND AND INDEX OF SHEETS
18	GENERAL NOTES
19	PHASE I PHASING AND OVERVIEW
20	PHASE II PHASING AND OVERVIEW
21	PHASE III PHASING, OVERVIEW AND PHASE IV PHASING
22	DETAIL DRAWING FOR TWO-WAY UNDIVIDED WORK ZONE WARNING SIGNS

LEGEND

GENERAL

- DIRECTION OF TRAFFIC FLOW
- NORTH ARROW
- PROPOSED PVMT.
- EXIST. PVMT.
- PROPOSED CONSTRUCTION
- REMOVAL OF EXIST. PAVEMENT AND STRUCTURE

TRAFFIC CONTROL DEVICES

- TYPE I BARRICADE
- TYPE II BARRICADE
- TYPE III BARRICADE
- CONE
- DRUM
- FLASHING ARROW PANEL (TYPE C)
- TYPE 'B' WARNING LIGHT
- STATIONARY SIGN
- PORTABLE SIGN
- WARNING FLAGS
- CRASH CUSHION
- CHANGEABLE MESSAGE SIGN
- TRUCK MOUNTED IMPACT ATTENUATOR (TMIA)
- POLICE
- FLAGGER
- DRUM (PROFILE)

PAVEMENT MARKINGS

- CRYSTAL PAVEMENT MARKER
- YELLOW/YELLOW PAVEMENT MARKER
- CRYSTAL/RED PAVEMENT MARKER
- PAVEMENT MARKING SYMBOLS

PROJECT NO. 42824
COUNTY: WATAUGA
STATION: 16+11.00
REPLACES BRIDGE NO. 37

STATE OF NORTH CAROLINA
DEPARTMENT OF TRANSPORTATION
RALEIGH

BRIDGE NO. 37 ON SR 1340
OVER MEAT CAMP CREEK

Florence & Hutcheson
CONSULTING ENGINEERS
5121 Kingdom Way, Suite 100 Raleigh, NC 27607
NC License No. F-0258

REVISIONS								SHEET NO.
NO.	BY	DATE	NO.	BY	DATE			18
1			3					TOTAL SHEETS
2			4					29

PROJECT REFERENCE NO.	SHEET NO.
B-5226	
R/W SHEET NO.	

NORTH CAROLINA PROFESSIONAL SEAL 15876 ENGINEER MICHAEL T. REEMA
3-7-11

PROJECT NOTES

GENERAL NOTES

CHANGES MAY BE REQUIRED WHEN PHYSICAL DIMENSIONS IN THE DETAIL DRAWINGS, STANDARD DETAILS AND ROADWAY DETAILS ARE NOT ATTAINABLE TO MEET FIELD CONDITIONS, OR RESULT IN DUPLICATE, OR UNDESIRED OVERLAPPING OF DEVICES. MODIFICATION MAY INCLUDE: MOVING, SUPPLEMENTING, COVERING OR REMOVAL OF DEVICES, AS DIRECTED BY THE ENGINEER.

THE FOLLOWING GENERAL NOTES APPLY AT ALL TIMES FOR THE DURATION OF THE CONSTRUCTION PROJECT, EXCEPT WHEN OTHERWISE NOTED IN THE PLAN, OR DIRECTED BY THE ENGINEER.

LANE AND SHOULDER CLOSURE REQUIREMENTS

A) REMOVE LANE CLOSURE DEVICES FROM THE LANE WHEN WORK IS NOT BEING PERFORMED BEHIND THE LANE CLOSURE OR WHEN A LANE CLOSURE IS NO LONGER NEEDED, OR AS DIRECTED BY THE ENGINEER.

B) WHEN PERSONNEL AND/OR EQUIPMENT ARE WORKING ON THE SHOULDER ADJACENT TO AN UNDIVIDED FACILITY AND WITHIN 5 FT OF AN OPEN TRAVEL LANE, CLOSE THE NEAREST OPEN TRAVEL LANE USING ROADWAY STANDARD DRAWING NO. 1101.02 UNLESS THE WORK AREA IS PROTECTED BY BARRIER OR GUARDRAIL.

C) WHEN PERSONNEL AND/OR EQUIPMENT ARE WORKING WITHIN A LANE OF TRAVEL OF AN UNDIVIDED OR DEVIDED FACILITY, CLOSE THE LANE ACCORDING TO THE TRAFFIC CONTROL PLANS, ROADWAY STANDARD DRAWINGS OR AS DIRECTED BY THE ENGINEER. CONDUCT THE WORK SO THAT ALL PERSONNEL AND/OR EQUIPMENT REMAIN WITHIN THE CLOSED TRAVEL LANE.

PAVEMENT EDGE DROP OFF REQUIREMENTS

D) BACKFILL AT A 6:1 SLOPE UP TO THE EDGE AND ELEVATION OF EXISTING PAVEMENT IN AREAS ADJACENT TO AN OPENED TRAVEL LANE THAT HAS AN EDGE OF PAVEMENT DROP-OFF AS FOLLOWS:

BACKFILL DROP-OFFS THAT EXCEED 2 INCHES ON ROADWAYS WITH POSTED SPEED LIMITS OF 45 MPH OR GREATER.

BACKFILL DROP-OFFS THAT EXCEED 3 INCHES ON ROADWAYS WITH POSTED SPEED LIMITS LESS THAN 45 MPH.

BACKFILL WITH SUITABLE COMPACTED MATERIAL, AS APPROVED BY THE ENGINEER, AT NO EXPENSE TO THE DEPARTMENT.

E) DO NOT EXCEED A DIFFERENCE OF 2 INCHES IN ELEVATION BETWEEN OPEN LANES OF TRAFFIC FOR NOMINAL LIFTS OF 1.5 INCHES. INSTALL ADVANCE WARNING "UNEVEN LANES" SIGNS (W8-11) 500 FT IN ADVANCE AND A MINIMUM OF ONCE EVERY HALF MILE THROUGHOUT THE UNEVEN AREA.

TRAFFIC PATTERN ALTERATIONS

F) NOTIFY THE ENGINEER TWENTY ONE (21) CALENDAR DAYS PRIOR TO ANY TRAFFIC PATTERN ALTERATION.

SIGNING

G) INSTALL ADVANCE WORK ZONE WARNING SIGNS WHEN WORK IS WITHIN 40 FROM THE EDGE OF TRAVEL LANE AND NO MORE THAN THREE (3) DAYS PRIOR TO THE BEGINNING OF CONSTRUCTION.

H) ENSURE ALL NECESSARY SIGNING IS IN PLACE PRIOR TO ALTERING ANY TRAFFIC PATTERN.

I) INSTALL BLACK ON ORANGE "DIP" SIGNS (W8-2) AND/OR "BUMP" SIGNS (W8-1) 100 FT IN ADVANCE OF THE UNEVEN AREA, OR AS DIRECTED BY THE ENGINEER.

TRAFFIC BARRIER

J) INSTALL TEMPORARY BARRIER ACCORDING TO THE TRAFFIC CONTROL PLANS A MAXIMUM OF TWO (2) WEEKS PRIOR TO BEGINNING WORK IN ANY LOCATION. ONCE TEMPORARY BARRIER IS INSTALLED IN ANY LOCATION, PROCEED IN A CONTINUOUS MANNER TO COMPLETE THE PROPOSED WORK IN THAT LOCATION UNLESS OTHERWISE STATED IN THE TRAFFIC CONTROL PLANS OR AS DIRECTED BY THE ENGINEER.

DO NOT PLACE BARRIER DIRECTLY ON ANY SURFACE OTHER THAN ASPHALT OR CONCRETE.

ONCE TEMPORARY BARRIER IS INSTALLED AT ANY LOCATION AND NO WORK IS PERFORMED BEHIND THE TEMPORARY BARRIER FOR A PERIOD LONGER THAN TWO (2) MONTHS, REMOVE/RESET TEMPORARY BARRIER AT NO COST TO THE DEPARTMENT UNLESS OTHERWISE STATED IN THE TRAFFIC CONTROL PLANS, TEMPORARY BARRIER IS PROTECTING A HAZARD, OR AS DIRECTED BY THE ENGINEER.

INSTALL TEMPORARY BARRIER WITH THE TRAFFIC FLOW, BEGINNING WITH THE UPSTREAM SIDE OF TRAFFIC. REMOVE TEMPORARY BARRIER AGAINST THE TRAFFIC FLOW, BEGINNING WITH THE DOWNSTREAM SIDE OF TRAFFIC.

INSTALL AND PLACE DRUMS NO GREATER THAN TWICE THE POSTED SPEED LIMIT (MPH) TO CLOSE OR KEEP THE SECTION OF THE ROADWAY CLOSED UNTIL THE TEMPORARY BARRIER CAN BE PLACED OR AFTER THE TEMPORARY BARRIER IS REMOVED.

K) PROTECT THE APPROACH END OF MOVABLE/PORTABLE CONCRETE BARRIER AT ALL TIMES DURING THE INSTALLATION AND REMOVAL OF THE BARRIER BY EITHER A TRUCK MOUNTED IMPACT ATTENUATOR (MAXIMUM 72 HOURS) OR A TEMPORARY CRASH CUSHION.

PROTECT THE APPROACH END OF MOVABLE/PORTABLE CONCRETE BARRIER FROM ONCOMING TRAFFIC AT ALL TIMES BY A TEMPORARY CRASH CUSHION UNLESS THE APPROACH END OF MOVABLE/PORTABLE CONCRETE BARRIER IS OFFSET FROM ONCOMING TRAFFIC AS FOLLOWS OR AS SHOWN IN THE PLANS:

POSTED SPEED LIMIT	MINIMUM OFFSET
40 OR LESS	15 FT.
45 - 50	20 FT.
55	25 FT.
60 OR HIGHER	30 FT.

TRAFFIC CONTROL DEVICES

L) SPACE CHANNELIZING DEVICES IN WORK AREAS NO GREATER IN FEET THAN TWICE THE SPEED LIMIT (MPH), EXCEPT 10 FT ON-CENTER IN RADII, AND 3 FT OFF THE EDGE OF AN OPEN TRAVELWAY, WHEN LANE CLOSURES ARE NOT IN EFFECT. WHEN SKINNY DRUMS ARE ALLOWED, REFER TO SECTION 1180 OF STANDARD SPECIFICATIONS FOR ROADS AND STRUCTURES OR AS SHOWN IN THE PLANS:

PAVEMENT MARKINGS AND MARKERS

M) INSTALL TEMPORARY PAVEMENT MARKINGS AND TEMPORARY PAVEMENT MARKERS ON INTERIM LAYERS OF PAVEMENT AS FOLLOWS:

ROAD NAME	MARKING	MARKER
SR 1340 (MEAT CAMP ROAD)	PAINT	TEMPORARY RAISED

N) STATE FORCES WILL INSTALL PAVEMENT MARKINGS AND PAVEMENT MARKERS ON THE FINAL SURFACE AS FOLLOWS:

ROAD NAME	MARKING	MARKER
SR 1340 (MEAT CAMP ROAD)	PAINT	PERMANENT RAISED

O) PLACE ONE APPLICATIONS OF PAINT FOR TEMPORARY TRAFFIC PATTERNS. PLACE A SECOND APPLICATION OF PAINT SIX (6) MONTHS AFTER THE INITIAL APPLICATION AND EVERY SIX (6) MONTHS AS DIRECTED BY THE ENGINEER.

P) TIE PROPOSED PAVEMENT MARKING LINES TO EXISTING PAVEMENT MARKING LINES.

Q) REMOVE/REPLACE ANY CONFLICTING/DAMAGED PAVEMENT MARKINGS AND MARKERS BY THE END OF EACH DAY'S OPERATION.

TEMPORARY SIGNALS

R) TEMPORARY TRAFFIC SIGNALS SHALL BE PROVIDED AND MAINTAINED BY NCDOT's DIVISION OFFICE.

MISCELLANEOUS

S) CONTRACTOR TO MAINTAIN ACCESS TO ALL DRIVEWAYS, WITHIN THE PROJECT LIMITS, AT ALL TIMES.

PROJECT NO. 42824
COUNTY: WATAUGA
STATION: 16+11.00
REPLACES BRIDGE NO. 37

STATE OF NORTH CAROLINA
DEPARTMENT OF TRANSPORTATION
RALEIGH

BRIDGE NO. 37 ON SR 1340
OVER MEAT CAMP CREEK

Florence & Hutcheson
CONSULTING ENGINEERS
5121 Kingdom Way, Suite 100 Raleigh, NC 27607
NC License No. F-0238

REVISIONS						
NO.	BY	DATE	NO.	BY	DATE	
1			3			
2			4			

SHEET NO. 19
TOTAL SHEETS 29

PROJECT REFERENCE NO.	SHEET NO.
B-5226	
R/W SHEET NO.	

NORTH CAROLINA PROFESSIONAL SEAL 15876 ENGINEER MICHAEL T. REEPAS

3-7-11

PHASE I OVERVIEW

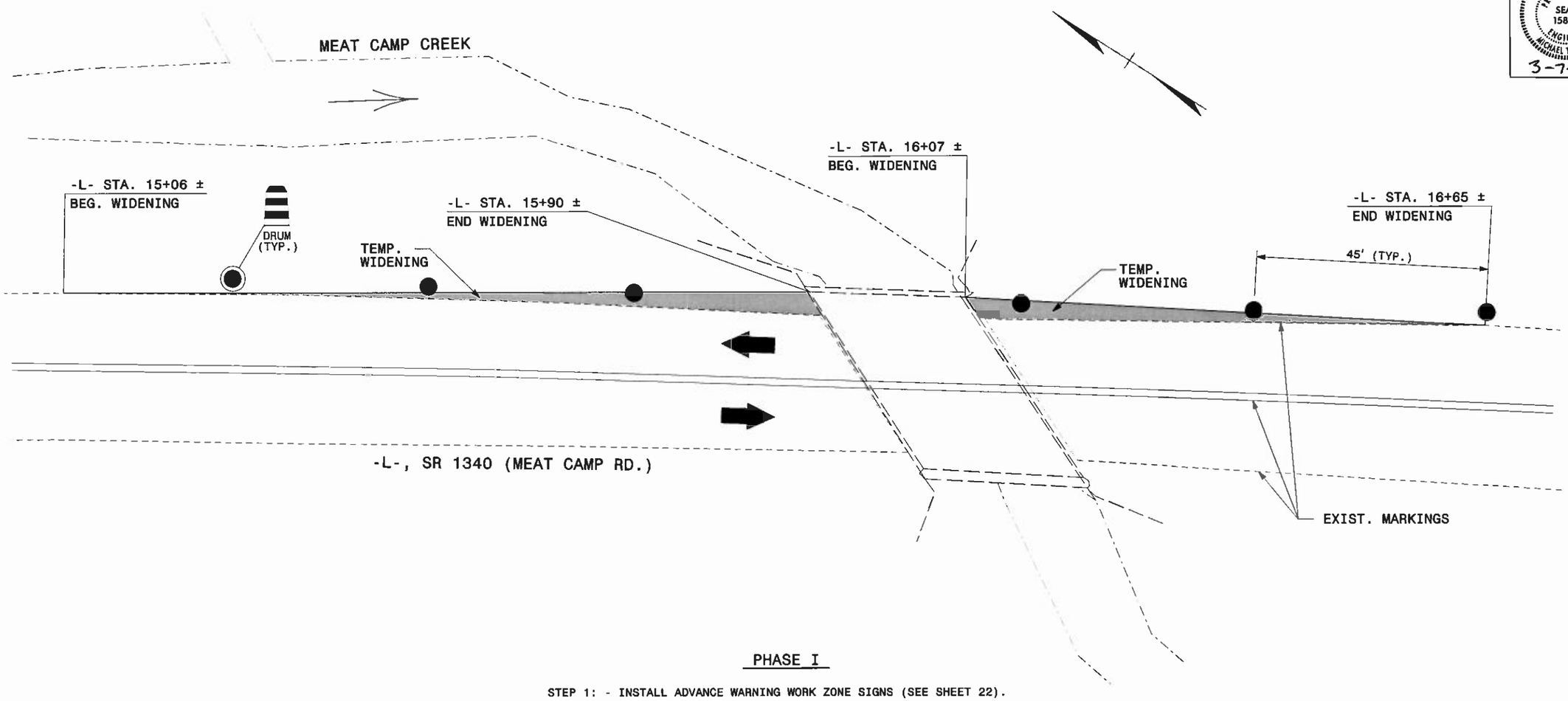

PHASE I

STEP 1: - INSTALL ADVANCE WARNING WORK ZONE SIGNS (SEE SHEET 22).

STEP 2: - BEGIN INSTALLATION OF TEMPORARY SIGNAL, KEEPING SIGNAL HEADS COVERD.

STEP 3: - USING ROADWAY STANDARD DRAWING NUMBER 1101.02, SHEET 1 OF 9, CONSTRUCT THE FOLLOWING WIDENING LEFT OF -L-, UP TO THE EXISTING EDGE AND ELEVATION AS SHOWN:

-L- STA. 15+06 ± TO -L- STA. 15+90 ±
-L- STA. 16+07 ± TO -L- STA. 16+65 ±

- REMOVE LANE CLOSURE AT THE END OF EACH WORKDAY.

LEGEND

PROPOSED CONSTRUCTION

Florence & Hutcheson
CONSULTING ENGINEERS
5121 Kingdom Way, Suite 100 Raleigh, NC 27607
NC License No. F-0258

PROJECT NO. 42824
COUNTY: WATAUGA
STATION: 16+11.00
REPLACES BRIDGE NO. 37

STATE OF NORTH CAROLINA
DEPARTMENT OF TRANSPORTATION
RALEIGH

BRIDGE NO. 37 ON SR 1340
OVER MEAT CAMP CREEK

REVISIONS								SHEET NO.
NO.	BY	DATE	NO.	BY	DATE			20
1			3					TOTAL SHEETS
2			4					29

PROJECT REFERENCE NO.	SHEET NO.
B-5226	
R/W SHEET NO	

NORTH CAROLINA PROFESSIONAL SEAL 15876 ENGINEER MICHAEL T. KEEPER
3-7-11

PHASE II OVERVIEW

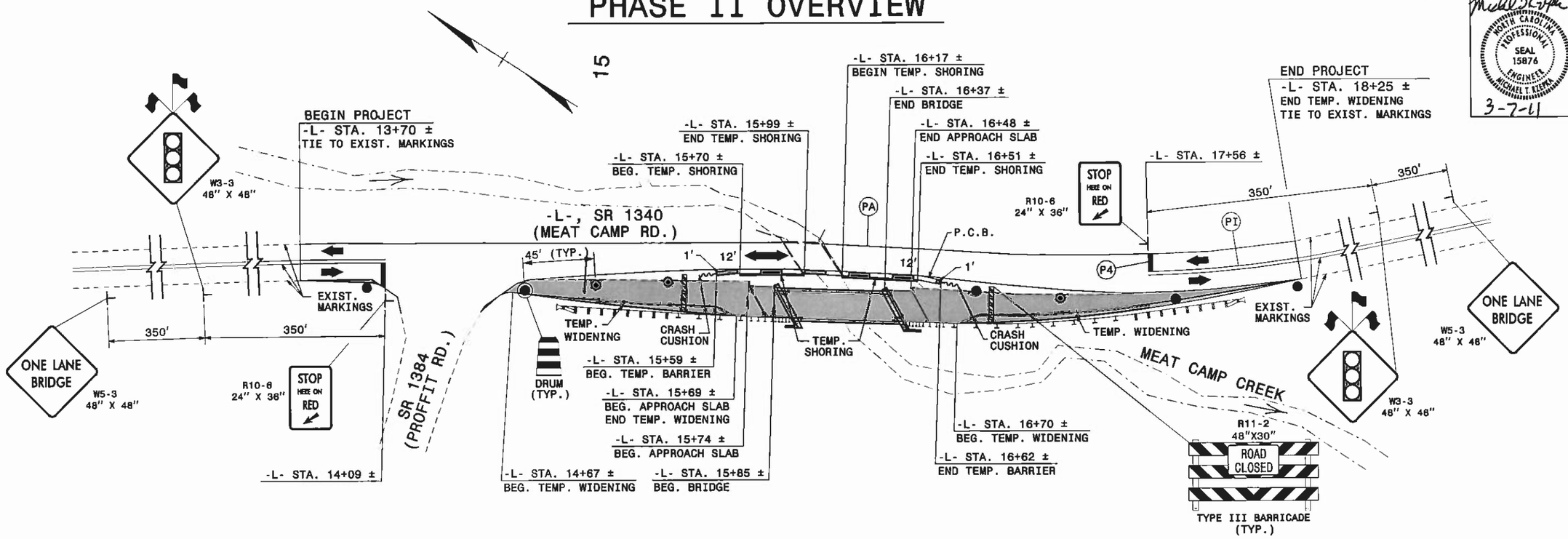

PHASE II

STEP 1: - USING ROADWAY STANDARD DRAWING NUMBER 1101.02, SHEET 1 OF 9, WEDGE EXISTING SR 1340 (MEAT CAMP RD.) UP TO BUT NOT INCLUDING THE FINAL LAYER OF SURFACE COURSE FROM -L- STA. 13+70 ± TO -L- STA. 18+25 ±, REPLACING ALL EXISTING MARKINGS OBLITERATED AT THE END OF EACH WORKDAY (SEE ROADWAY PLANS).

STEP 2: - AWAY FROM TRAFFIC, INSTALL TEMPORARY JOISTS AND POSTS UNDER EXISTING STRUCTURE (SEE STRUCTURE PLANS AND SHEET 2, STAGE 1).

WORKING IN A CONTINUOUS MANNER, COMPLETE THE FOLLOWING WORK IN PHASE II, STEP 3, AS SHOWN, USING ROADWAY STANDARD DRAWING NUMBER 1101.02, SHEET 1 OF 9.

STEP 3: - COMPLETE INSTALLATION OF TEMPORARY SIGNAL, KEEPING SIGNAL HEADS COVERED.

- INSTALL SIGNAL AHEAD SIGNS, "STOP HERE ON RED" SIGNS AND "ONE LANE BRIDGE" SIGNS, AS SHOWN, KEEPING SIGNS COVERED.

- REMOVE EXISTING DOUBLE YELLOW CENTER LINES AND WHITE EDGE LINES FROM -L- STA. 13+70 ± TO -L- STA. 18+25 ±.

- PLACE TEMPORARY MARKINGS (PAINT) AND MARKERS (TEMPORARY RAISED), FROM -L- STA. 13+70 ± TO -L- STA. 18+25 ±, AS SHOWN.

- UNCOVER TEMPORARY SIGNAL, SIGNAL AHEAD SIGNS AND "ONE LANE BRIDGE" SIGNS, ACTIVATE TEMPORARY SIGNAL AND PLACE -L- SR 1340 (MEAT CAMP RD.) TRAFFIC IN A ONE-LANE, TWO-WAY PATTERN, AS SHOWN.

STEP 4: - USING FLAGGERS, FLAGGER AHEAD SIGNS AND DRUMS, PLACE TEMPORARY BARRIER RIGHT OF -L- FROM -L- STA. 15+59 ± TO STA. 16+62 ±, AS SHOWN.

STEP 5: - BEHIND TEMPORARY BARRIER REMOVE RIGHT PORTION OF EXISTING STRUCTURE (SEE STRUCTURE PLANS AND SHEET 2, STAGE 1).

STEP 6: - BEHIND TEMPORARY BARRIER, PLACE TEMPORARY SHORING-BARRIER SUPPORTED RIGHT OF -L- AT THE FOLLOWING LOCATIONS, AS SHOWN:

-L- STA. 15+69 ± TO -L- STA. 15+98 ±
-L- STA. 16+17 ± TO -L- STA. 16+51 ±

STEP 7: - BEHIND TEMPORARY BARRIER, BEGIN CONSTRUCTION OF PROPOSED STRUCTURE, RIGHT OF -L- FROM -L- STA. 15+74 ± TO -L- STA. 16+48 ±, AS SHOWN (SEE STRUCTURE PLANS AND SHEET 2, STAGE 2).

STEP 8: - BEHIND TEMPORARY BARRIER AND USING FLAGGERS, FLAGGER AHEAD SIGNS AND DRUMS, CONSTRUCT RIGHT OF -L-, UP TO BUT NOT INCLUDING THE FINAL LAYER OF SURFACE COURSE FROM -L- STA. 13+70 ± TO -L- STA. 18+25 ±, INCLUDING TEMPORARY WIDENING AT THE FOLLOWING LOCATIONS, AS SHOWN (SEE ROADWAY PLANS):

-L- STA. 14+67 ± TO -L- STA. 15+69 ±
-L- STA. 16+70 ± TO -L- STA. 18+25 ±

STEP 9: - BEHIND TEMPORARY BARRIER, COMPLETE CONSTRUCTION OF PROPOSED STRUCTURE, RIGHT OF -L- FROM -L- STA. 15+74 ± TO -L- STA. 16+48 ±, AS SHOWN (SEE STRUCTURE PLANS AND SHEET 2, STAGE 2).

NOTES:

1) REPLACE ANY DAMAGED OR MISSING TYPE 3 OBJECT MARKER ON THE NORTHEAST SIDE OF THE EXIST. BRIDGE.

2) PLACE TEMPORARY RAISED PAVEMENT MARKERS ON THE EXIST. BRIDGE AND APPROACHES IN ACCORDANCE WITH ROADWAY STANDARD DRAWING NUMBER 1205.12, SHEET 1 OF 1 (ONE LANE BRIDGE).

LEGEND

PROPOSED CONSTRUCTION

Florence & Hutcheson
CONSULTING ENGINEERS
5121 Kingdom Way, Suite 100 Raleigh, NC 27607
NC License No. F-0258

PROJECT NO. 42824
COUNTY: WATAUGA
STATION: 16+11.00
REPLACES BRIDGE NO. 37

STATE OF NORTH CAROLINA
DEPARTMENT OF TRANSPORTATION
RALEIGH

BRIDGE NO. 37 ON SR 1340
OVER MEAT CAMP CREEK

REVISIONS								SHEET NO.
NO.	BY	DATE	NO.	BY	DATE			21
1			3					TOTAL SHEETS
2			4					29

PROJECT REFERENCE NO.	SHEET NO.
B-5226	
R/W SHEET NO.	

PHASE III OVERVIEW

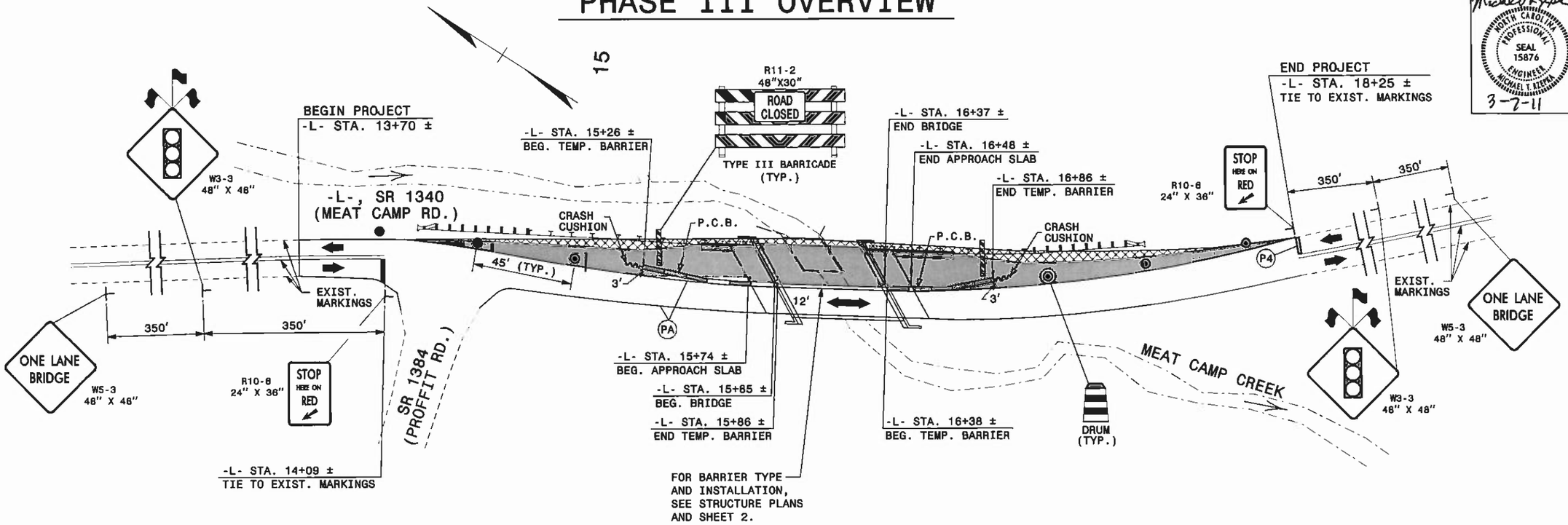

PHASE III

WORKING IN A CONTINUOUS MANNER, COMPLETE THE FOLLOWING WORK IN PHASE III, STEP 1, AS SHOWN, USING FLAGGERS, FLAGGER AHEAD SIGNS AND DRUMS.

STEP 1: - RESET TEMPORARY BARRIER TO THE FOLLOWING LOCATIONS, AS SHOWN:

-L- STA. 15+26 ± TO -L- STA. 15+86 ±
-L- STA. 16+38 ± TO -L- STA. 16+86 ±

- REMOVE ALL EXISTING PAVEMENT MARKINGS FROM -L- STA. 14+09 ± TO -L- STA. 18+25 ±.

- PLACE TEMPORARY PAVEMENT MARKINGS (PAINT) AND MARKERS (TEMPORARY RAISED), FROM -L- STA. 14+09 ± TO -L- STA. 18+25 ±, AS SHOWN.

- ADJUST TEMPORARY SIGNAL HEADS AS NECESSARY, AND PLACE -L-, SR 1340 (MEAT CAMP RD.) TRAFFIC IN A ONE-LANE, TWO-WAY PATTERN, AS SHOWN.

STEP 2: - BEHIND TEMPORARY BARRIER, REMOVE LEFT PORTION OF EXISTING STRUCTURE, (SEE STRUCTURE PLANS AND SHEET 2, STAGE 3).

STEP 3: - BEHIND TEMPORARY BARRIER, BEGIN CONSTRUCTION OF PROPOSED STRUCTURE, LEFT OF -L- FROM -L- STA. 15+74 ± TO -L- STA. 16+48 ±, AS SHOWN (SEE STRUCTURE PLANS AND SHEET 2, STAGE 4).

STEP 4: - BEHIND TEMPORARY BARRIER AND USING FLAGGERS, FLAGGER AHEAD SIGNS AND DRUMS, COMPLETE THE FOLLOWING, AS SHOWN (SEE ROADWAY PLANS):

REMOVE EXISTING PAVEMENT LEFT OF -L- FROM -L- STA. 13+70 ± TO -L- STA. 18+25 ±

CONSTRUCT LEFT OF -L-, UP TO BUT NOT INCLUDING THE FINAL LAYER OF SURFACE COURSE, FROM -L- STA. 13+70 ± TO -L- STA. 18+25 ±

STEP 5: - BEHIND TEMPORARY BARRIER, COMPLETE CONSTRUCTION OF PROPOSED STRUCTURE, LEFT OF -L- FROM -L- STA. 15+74 ± TO -L- STA. 16+48 ±, AS SHOWN (SEE STRUCTURE PLANS AND SHEET 2, STAGE 4).

PHASE IV

WORKING IN A CONTINUOUS MANNER, COMPLETE THE FOLLOWING WORK IN PHASE IV, STEPS 1 AND 2, AS SHOWN, USING FLAGGERS, FLAGGER AHEAD SIGNS AND DRUMS.

STEP 1: - RESET THE LEFT PRECAST BRIDGE RAIL FROM THE TEMPORARY LOCATION TO THE FINAL LOCATION (SEE STRUCTURE PLANS AND SHEET 2, STAGE 4).

STEP 2: - REMOVE TEMPORARY BARRIER. REMOVE ANY CONFLICTING PAVEMENT MARKING LINES AND MARKERS. PLACE PAVEMENT MARKINGS (PAINT) AND MARKERS (TEMPORARY RAISED) IN THE FINAL PATTERN AND PLACE -L-, SR 1340 (MEAT CAMP RD.) TRAFFIC IN THE FINAL TWO-LANE, TWO-WAY PATTERN.

STEP 3: - USING ROADWAY STANDARD DRAWING NUMBER 1101.02, SHEET 1 OF 9, PLACE THE FINAL LAYER OF SURFACE COURSE, FINAL PAVEMENT MARKINGS (PAINT) AND MARKERS (PERMANENT RAISED) IN THE FINAL PATTERN AND PLACE -L-, SR 1340 (MEAT CAMP RD.) TRAFFIC IN THE FINAL TWO-LANE, TWO-WAY PATTERN, FROM -L- STA. 13+70 ± TO -L- STA. 18+25 ± (SEE ROADWAY PLANS).

STEP 4: - REMOVE ALL TRAFFIC CONTROL DEVICES.

NOTE:

1) PLACE TEMPORARY RAISED PAVEMENT MARKERS ON THE EXIST. BRIDGE AND APPROACHES IN ACCORDANCE WITH ROADWAY STANDARD DRAWING NUMBER 1205.12, SHEET 1 OF 1 (ONE LANE BRIDGE).

LEGEND

PROPOSED CONSTRUCTION

REMOVAL OF EXIST. STRUCTURE AND PAVEMENT

Florence & Hutcheson
CONSULTING ENGINEERS
5121 Kingdom Way, Suite 100 Raleigh, NC 27607
NC License No. F-0208

PROJECT NO. 42824
COUNTY: WATAUGA
STATION: 16+11.00
REPLACES BRIDGE NO. 37

STATE OF NORTH CAROLINA
DEPARTMENT OF TRANSPORTATION
RALEIGH

BRIDGE NO. 37 ON SR 1340
OVER MEAT CAMP CREEK

REVISIONS						SHEET NO.
NO.	BY	DATE	NO.	BY	DATE	22
1			3			TOTAL SHEETS
2			4			29

PROJECT REFERENCE NO.	SHEET NO.
B-5226	
R/W SHEET NO.	

TWO-WAY UNDIVIDED ** (L-LINES)

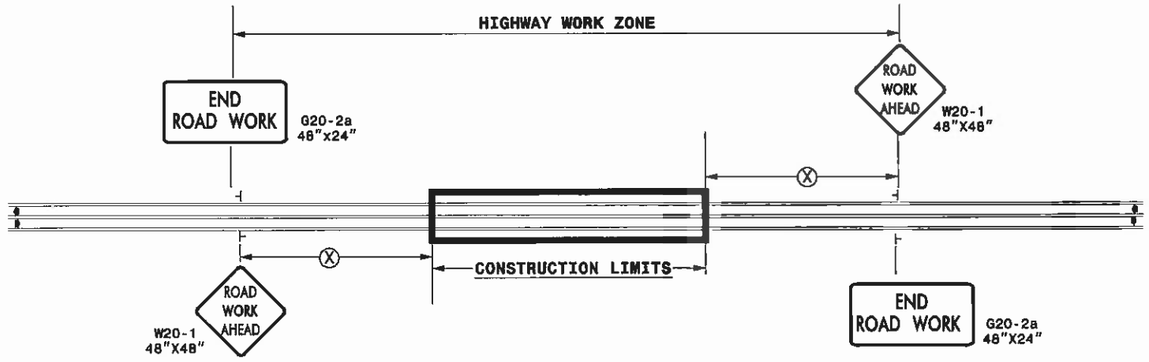

POSTED SPEED LIMIT (M.P.H.)	RECOMMENDED MINIMUM SIGN SPACING (X)
≤ 50	500'
≥ 55	1000'

ROADWAYS INTERSECTING ALONG 2 WAY UNDIVIDED WORK ZONE (Y-LINES)

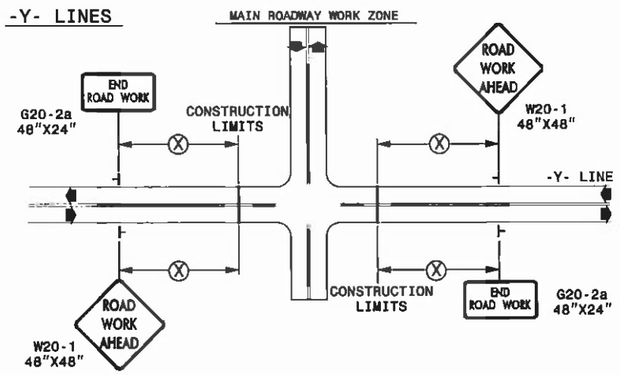

GENERAL NOTES

- USE FLUORESCENT ORANGE SHEETING (TYPE VII OR HIGHER) ON ALL ADVANCED WORK ZONE SIGNS.
- DO NOT INSTALL ADVANCE WARNING SIGNS MORE THAN 3 DAYS PRIOR TO BEGINNING OF WORK.
- SIGNS SHOWN ARE REQUIRED FOR WORK ZONES THAT WILL REMAIN IN EFFECT OVERNIGHT. FOR SHORT-TERM DAILY MAINTENANCE TYPE OPERATIONS, THIS SIGNING APPLICATION IS OPTIONAL; MAY USE ONLY APPLICABLE ROADWAY STANDARD DRAWINGS INSTEAD. HOWEVER, IF THIS SIGNING APPLICATION IS USED, SIGNS MAY BE PORTABLE MOUNTED.
- ALL SIGN SPACING DIMENSIONS ARE APPROXIMATE, FIELD ADJUST AS NECESSARY OR AS DIRECTED.
- USE 3LB STEEL U-CHANNEL POST OR 4" X 4" WOOD POST FOR ALL WORK ZONE SIGNS. 3LB STEEL U-CHANNEL POSTS MUST MEET THE REQUIREMENTS OF STANDARD SPECIFICATION SECTION 1084-1(B), MAY BE GALVANIZED STEEL, OR MAY BE PAINTED GREEN BY THE POST MANUFACTURER. SQUARE STEEL TUBING POSTS HAVING EQUIVALENT STRENGTH OF THE 3 LB STEEL U-CHANNEL POST ARE ALSO ACCEPTABLE FOR USE. ERECT SIGNS PER ROADWAY STANDARD DRAWING 1110.01. PAYMENT FOR WOOD POSTS, 3LB STEEL U-CHANNEL AND SQUARE STEEL TUBING POSTS WITH SIGNS WILL BE MADE ACCORDING TO STANDARD SPECIFICATION "WORK ZONE SIGNS" SECTION 1110.
- WHEN NECESSARY, USE SPLICING IN ACCORDANCE WITH ROADWAY STANDARD DRAWING NO. 1110.01. REMOVE ENTIRE POST WHEN REMOVING SIGNS WITH SPLICED POSTS.
- DO NOT BACK BRACE SIGN SUPPORTS.
- ** TWO-WAY UNDIVIDED ADVANCE WARNING SIGN CONFIGURATION MAY BE USED ON URBAN MULTI-LANE FACILITIES WHERE CONDITIONS LIMIT THE USE OF DUAL MOUNTED SIGNS AS DETERMINED BY THE ENGINEER.

LEGEND

⊢ STATIONARY SIGN

◀ DIRECTION OF TRAFFIC FLOW

Michael T. Kelpke
NORTH CAROLINA PROFESSIONAL SEAL 15876 ENGINEER MICHAEL T. KELPKE
3-7-11

STATE OF NORTH CAROLINA
DEPT. OF TRANSPORTATION
DIVISION OF HIGHWAYS
RALEIGH, N.C.

DETAIL DRAWING FOR TWO-WAY UNDIVIDED WORK ZONE WARNING SIGNS

SHEET 1 OF 1

PROJECT NO. 42824
COUNTY: WATAUGA
STATION: 16+11.00
REPLACES BRIDGE NO. 37

STATE OF NORTH CAROLINA
DEPARTMENT OF TRANSPORTATION
RALEIGH

BRIDGE NO. 37 ON SR 1340
OVER MEAT CAMP CREEK

Florence & Hutcheson
CONSULTING ENGINEERS
5121 Kingdom Way, Suite 100 Raleigh, NC 27607
NC License No: F-0258

REVISIONS								SHEET NO.
NO.	BY	DATE	NO.	BY	DATE			23
1			3					TOTAL SHEETS
2			4					29

PROJ. REFERENCE NO.	SHEET NO.
B-5226	24

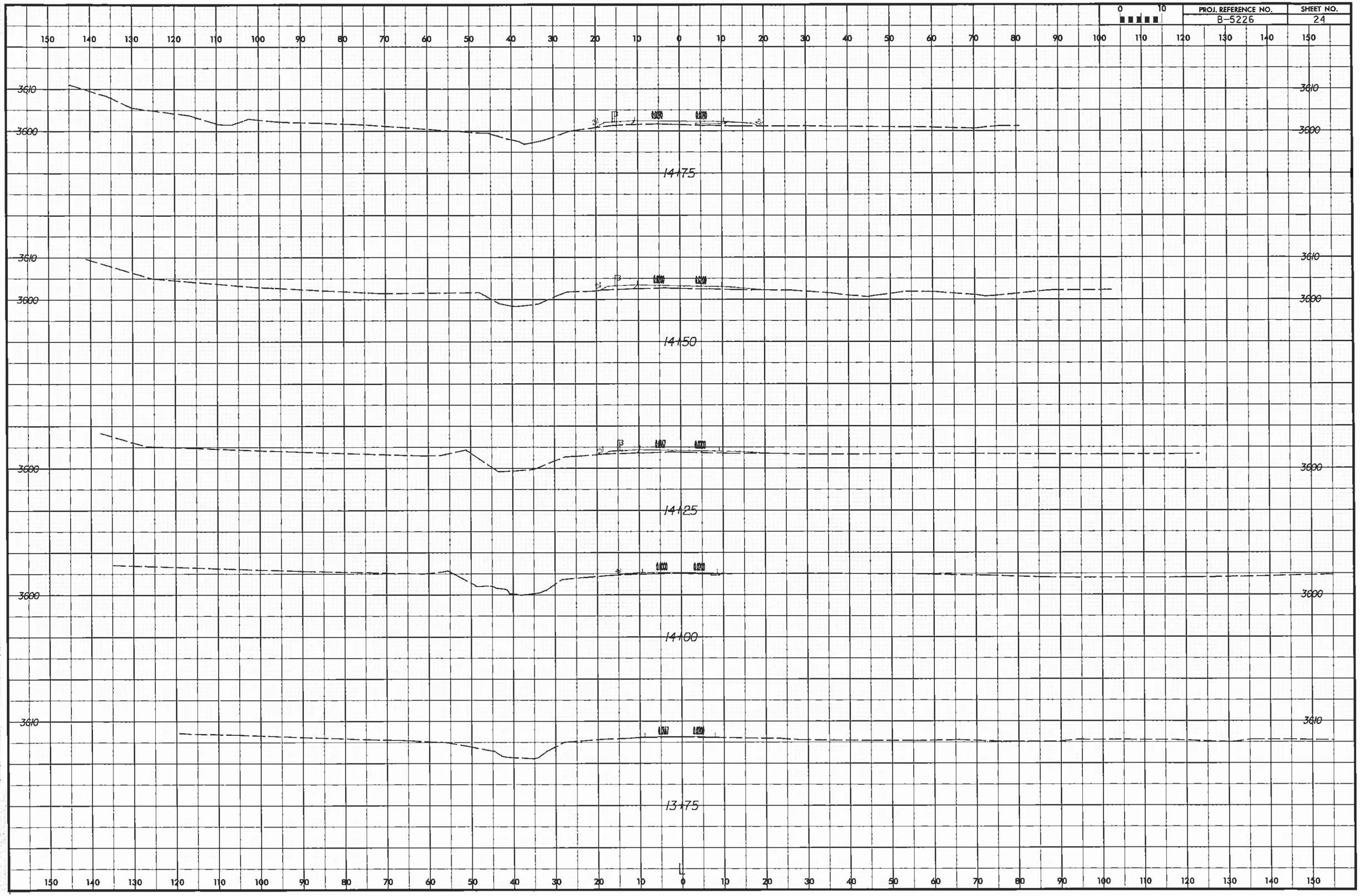

PROJ. REFERENCE NO.	SHEET NO.
B-5226	25

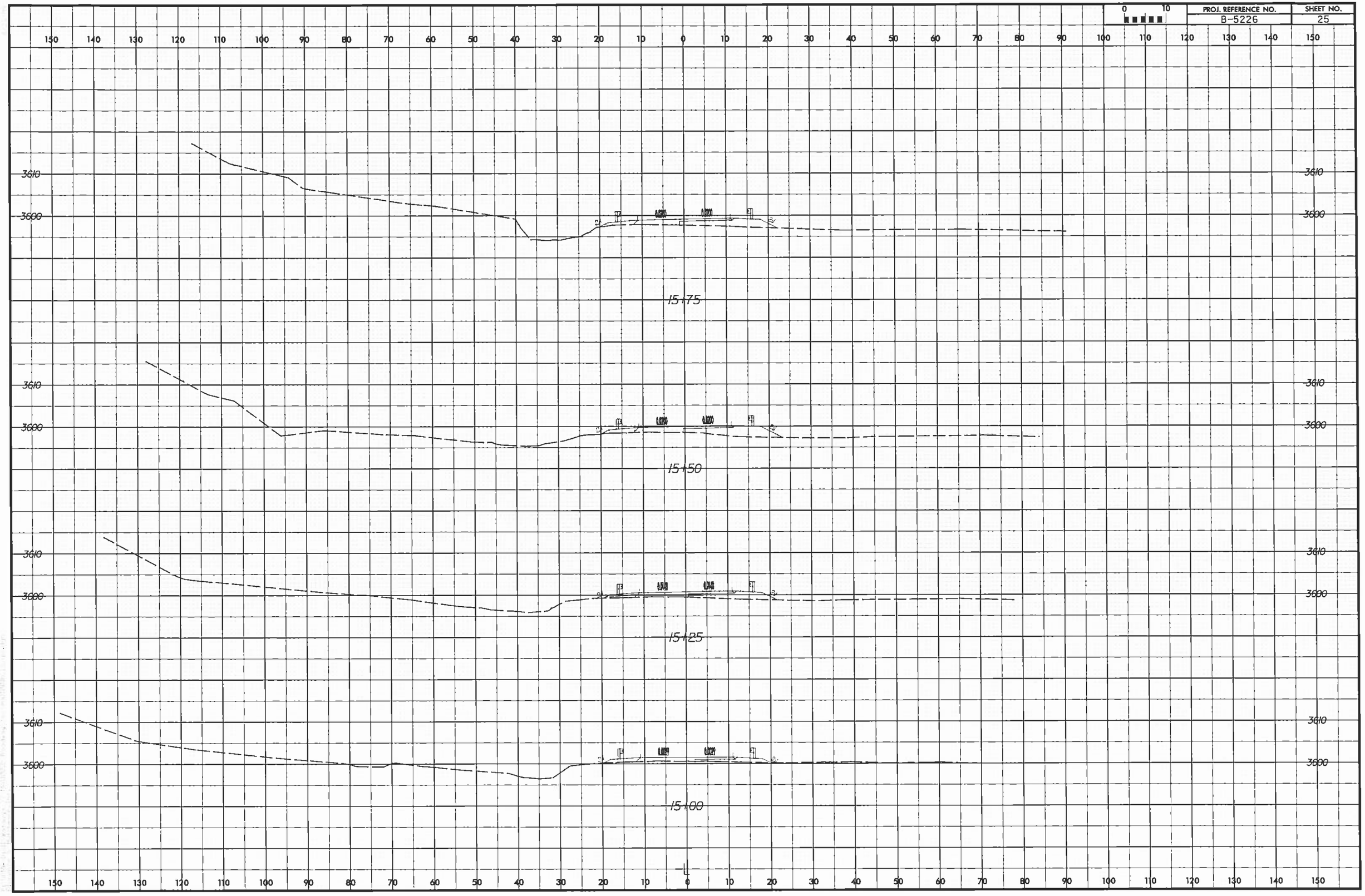

PROJ. REFERENCE NO.	SHEET NO.
B-5226	26

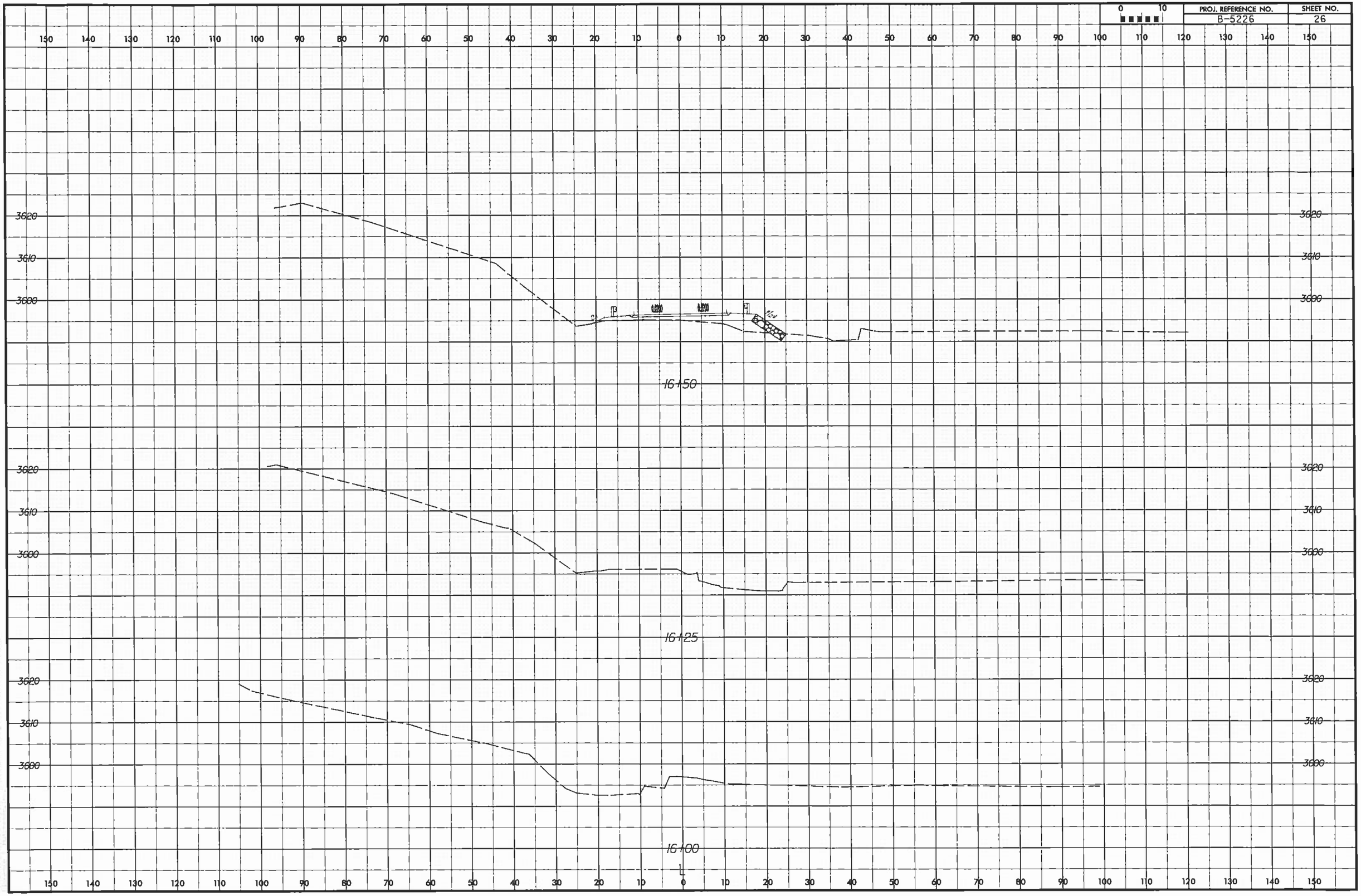

PROJ. REFERENCE NO.	SHEET NO.
B-5226	27

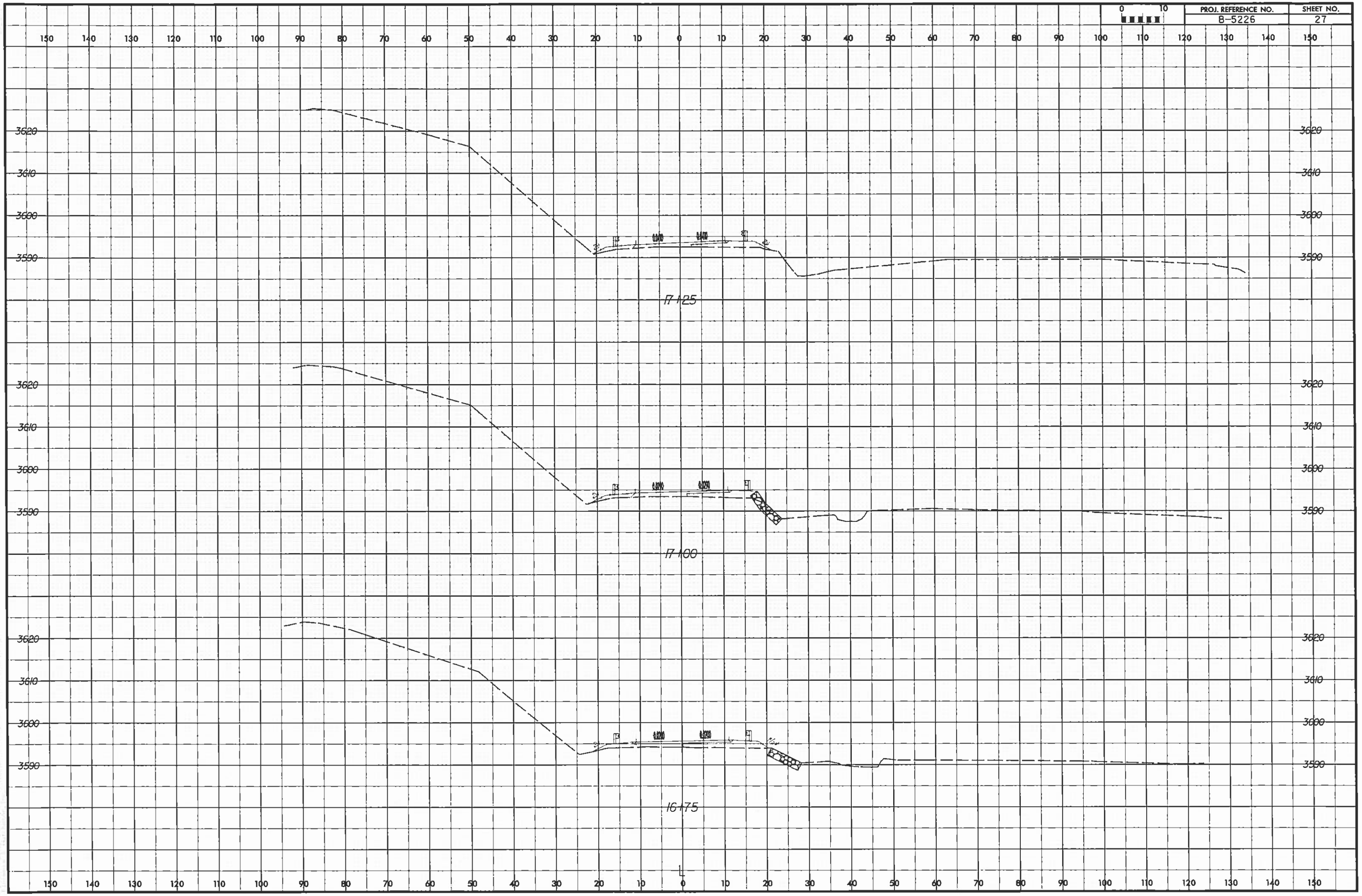

PROJ. REFERENCE NO.	SHEET NO.
B-5226	28

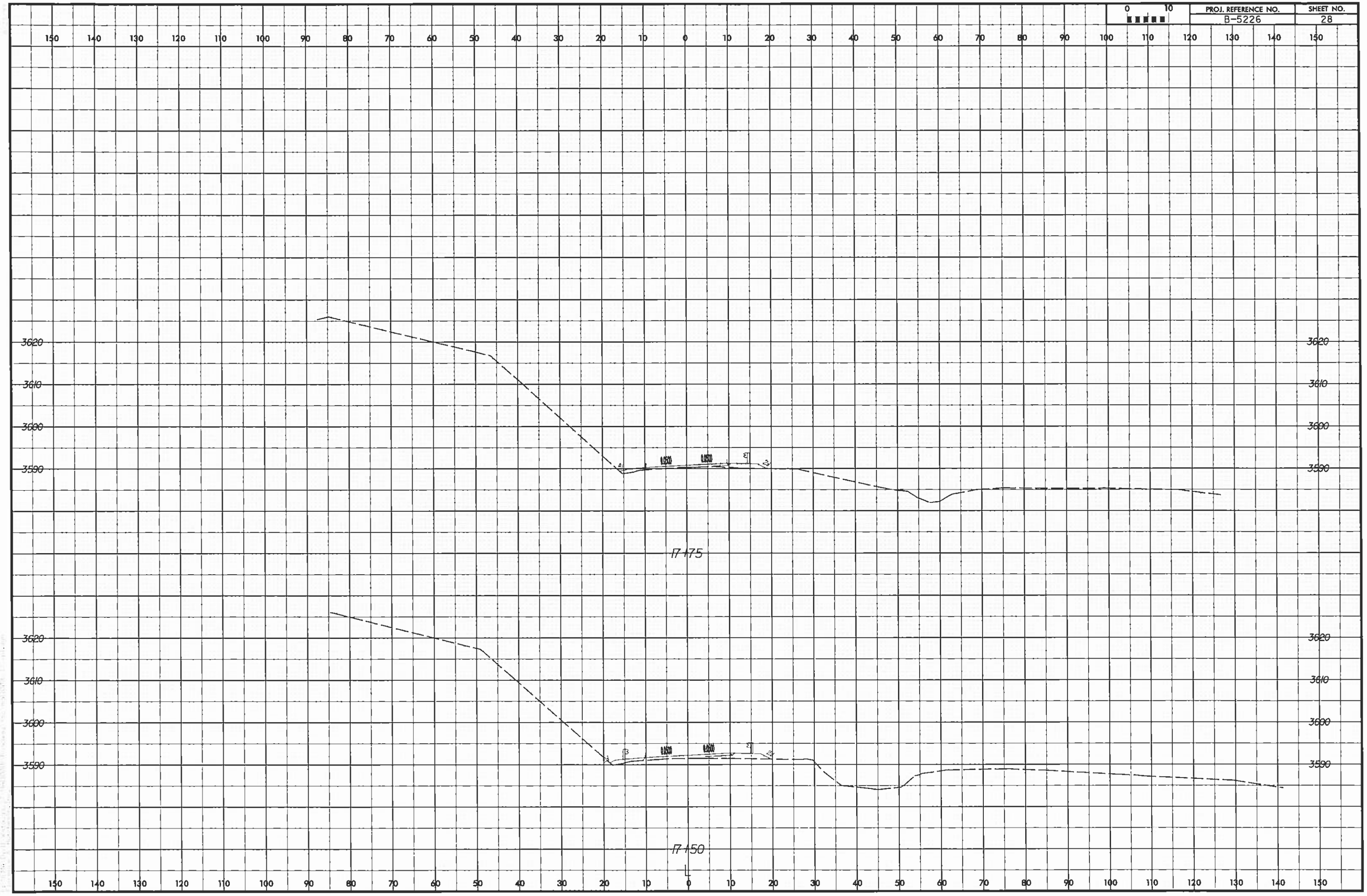
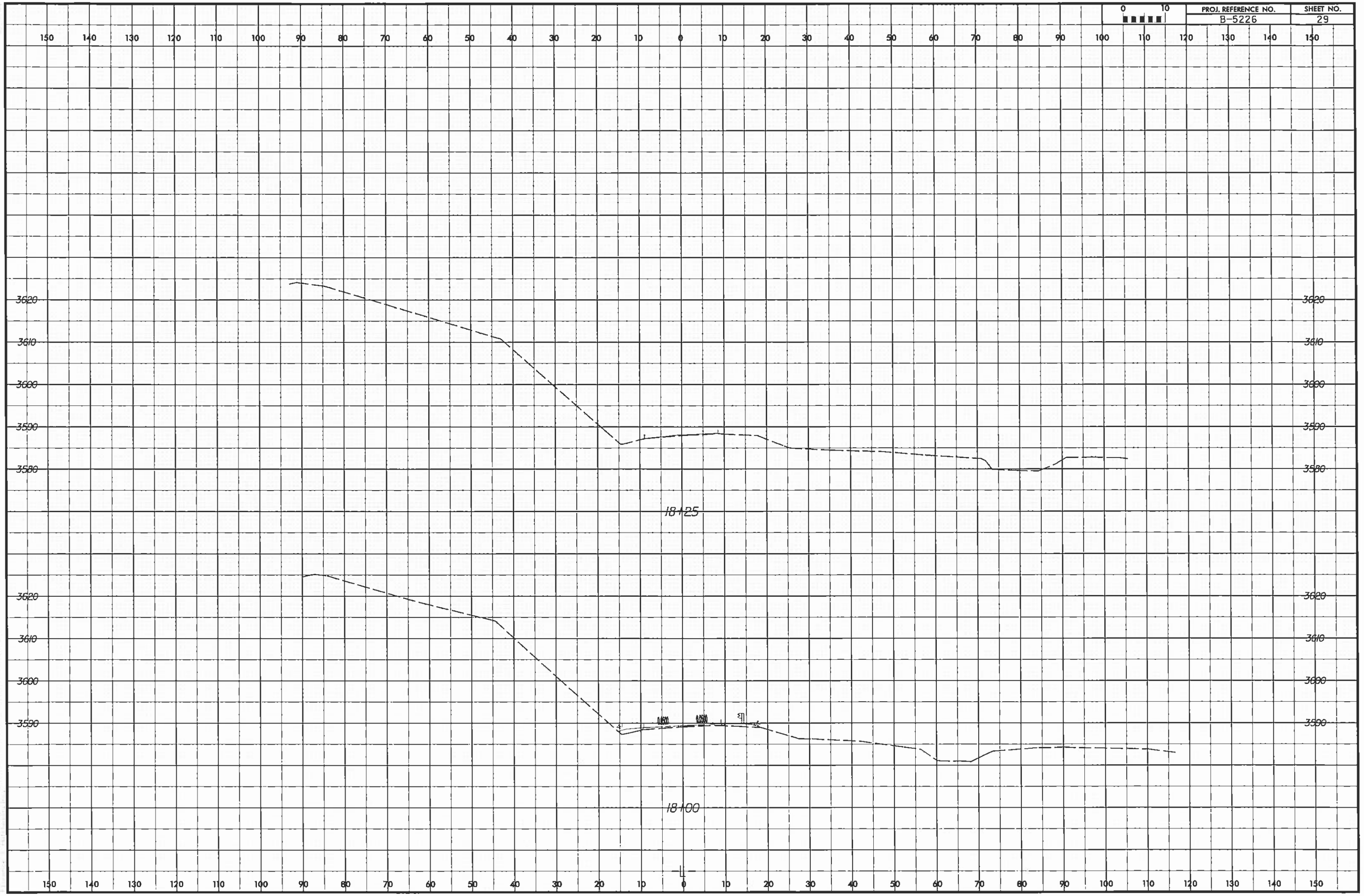
PROJ. REFERENCE NO.	SHEET NO.
B-5226	29