B-3657

CONTRACT # DO0117

STATE	STATE PROJECT REFERENCE NO.	SHEET NO.	TOTAL SHEETS
N.C.	B-3657	1	26

STATE PROJECT NO.	F.A. PROJ. NO.	DESCRIPTION
33203.3.1		P.E.

STATE OF NORTH CAROLINA
DIVISION OF HIGHWAYS

HAYWOOD COUNTY

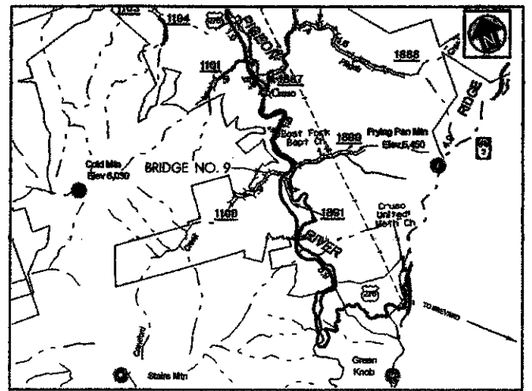

VICINITY MAP
(NOT TO SCALE)

LOCATION: SR 1100 (CRAWFORD CREEK RD.) BRIDGE NO. 9 OVER CRAWFORD CREEK

TYPE OF WORK: BRIDGE REPLACEMENT WITH PRE-STRESSED CONCRETE BOX BEAM SUPERSTRUCTURE ON REINFORCED CONCRETE W/STEEL PILE END BENTS AND ROADWAY APPROACHES

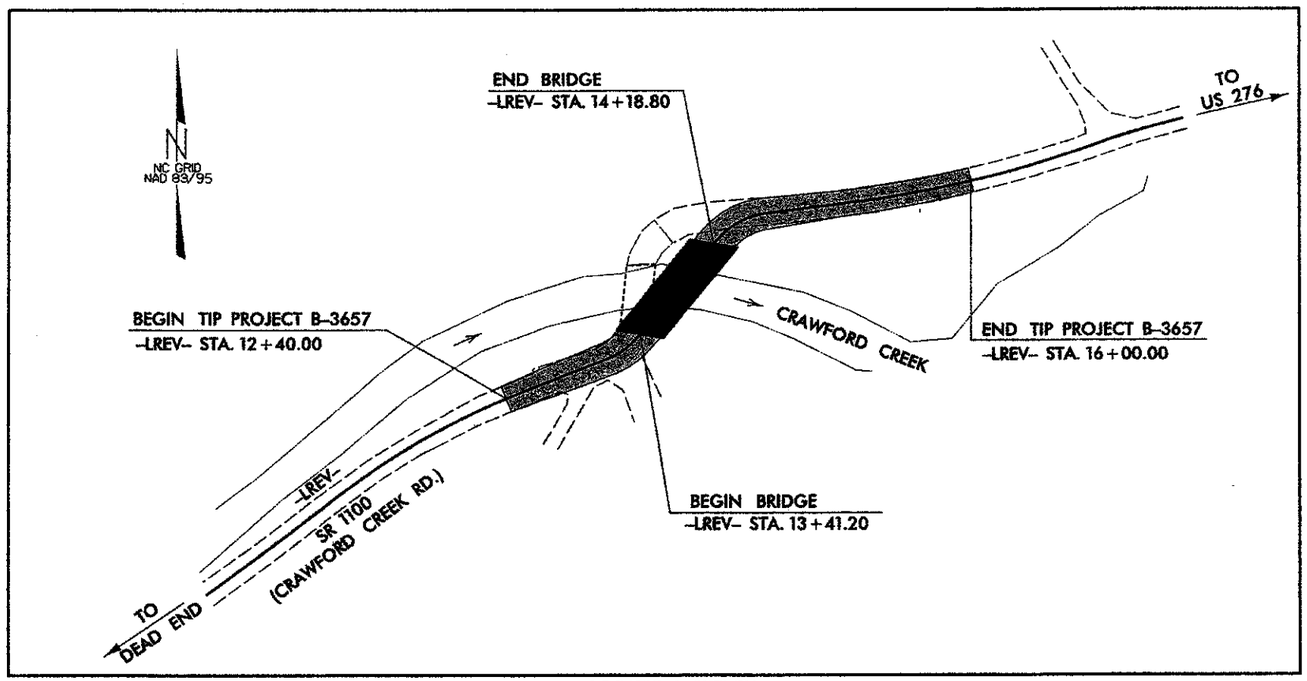

LOCATION SKETCH

STATE OF NORTH CAROLINA DEPARTMENT OF TRANSPORTATION

DESIGN DATA

ADT 2000 = 100

PROJECT LENGTH

LENGTH ROADWAY TIP PROJECT B-3657	=	0.048 MILE
LENGTH STRUCTURE TIP PROJECT B-3657	=	0.020 MILE
TOTAL LENGTH TIP PROJECT B-3657	=	0.068 MILE

Prepared In the Office of:
MULKEY ENGINEERS & CONSULTANTS
FOR
NORTH CAROLINA DEPARTMENT OF TRANSPORTATION

2006 STANDARD SPECIFICATIONS

LETTING DATE:
MARCH 31, 2011

L. KEVIN AUSTIN, PE
PROJECT ENGINEER

NCDOT CONTACT: MIKE SUMMERS
BRIDGE MANAGEMENT PROJECT MANAGER

NORTH CAROLINA PROFESSIONAL SEAL 19661 ENGINEER L. KEVIN AUSTIN 3/9/11

L. KEVIN AUSTIN, PE
DESIGN ENGINEER

3/3/2011 9:59:38 AM
R:\Structures\B3657\B3657PS_SD_TSH_01.dgn

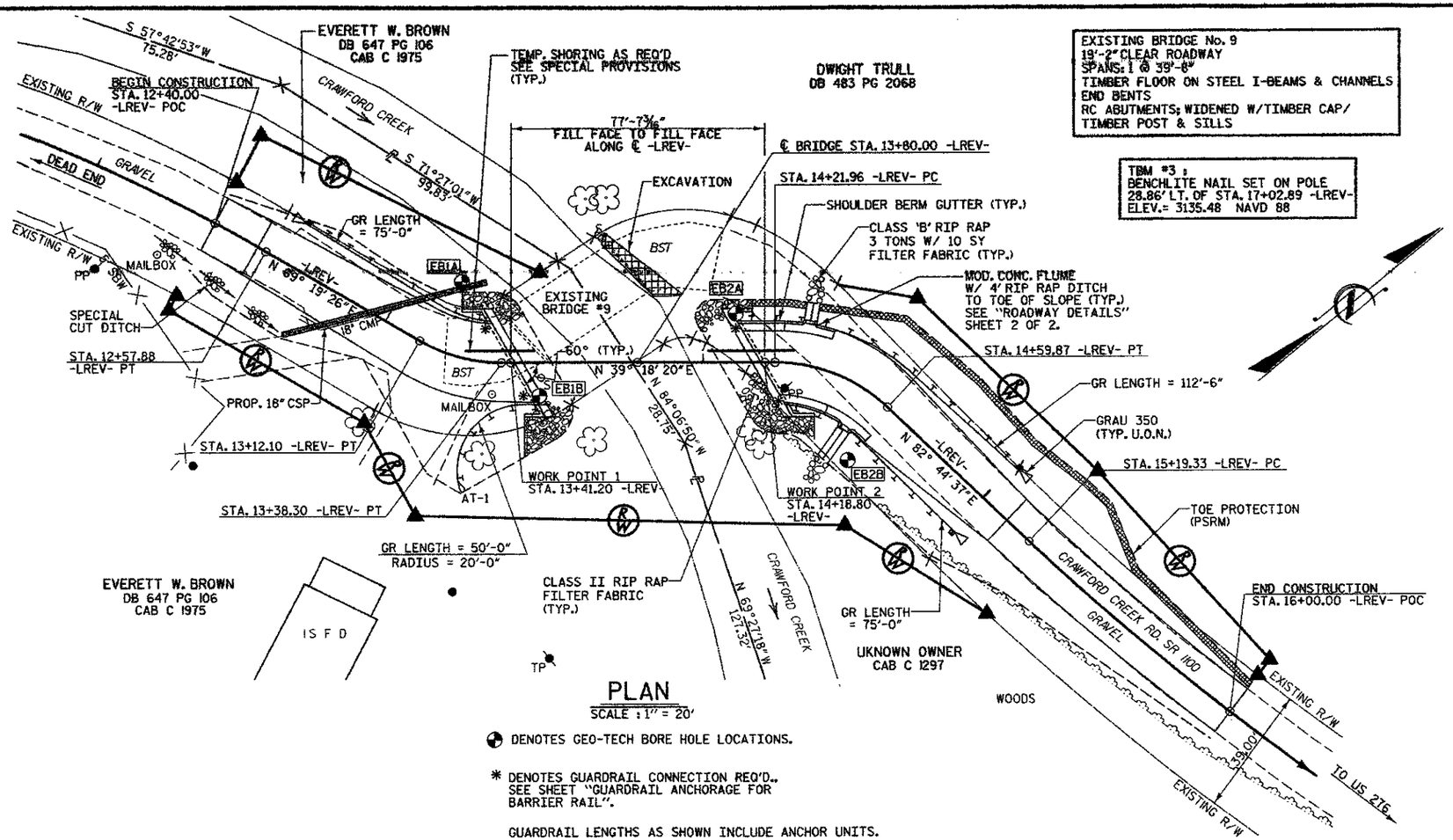

PLAN

SCALE : 1" = 20'

EXISTING BRIDGE No. 9
19'-2" CLEAR ROADWAY
SPANS: 1 @ 39'-8"
TIMBER FLOOR ON STEEL I-BEAMS & CHANNELS
END BENTS
RC ABUTMENTS; WIDENED W/TIMBER CAP/
TIMBER POST & SILLS

TBM #3 :
BENCHLITE NAIL SET ON POLE
28.86' LT. OF STA. 17+02.89 -LREV-
ELEV.= 3135.48 NAVD 88

DENOTES GEO-TECH BORE HOLE LOCATIONS.

* DENOTES GUARDRAIL CONNECTION REQ'D.. SEE SHEET "GUARDRAIL ANCHORAGE FOR BARRIER RAIL".

GUARDRAIL LENGTHS AS SHOWN INCLUDE ANCHOR UNITS.

U.O.N. - UNLESS OTHERWISE NOTED

FOR PAVEMENT & R/W LAYOUT SEE "ROADWAY DETAILS", SHEET 1 OF 2.

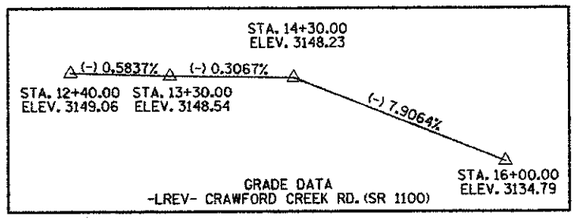

NOTES

FOR EROSION CONTROL MEASURES SEE EROSION CONTROL PLANS.

REMOVAL OF THE EXISTING BRIDGE SHALL BE PERFORMED SO AS NOT TO ALLOW DEBRIS TO FALL INTO THE WATER. THE CONTRACTOR SHALL REMOVE THE BRIDGE AND SUBMIT PLANS FOR THE DEMOLITION IN ACCORDANCE WITH ARTICLE 402-2 OF THE STANDARD SPECIFICATIONS.

THE SUBSTRUCTURE OF THE EXISTING BRIDGE INDICATED ON THE PLANS IS FROM THE BEST INFORMATION AVAILABLE. SINCE THIS INFORMATION IS SHOWN FOR THE CONVENIENCE OF THE CONTRACTOR, THE CONTRACTOR SHALL HAVE NO CLAIM WHATSOEVER AGAINST THE DEPARTMENT OF TRANSPORTATION FOR ANY DELAYS OR ADDITIONAL COST INCURRED BASED ON DIFFERENCES BETWEEN THE EXISTING BRIDGE SUBSTRUCTURE SHOWN ON THE PLANS AND THE ACTUAL CONDITIONS AT THE PROJECT SITE.

INASMUCH AS THE PAINT SYSTEM ON THE EXISTING STRUCTURAL STEEL CONTAINS LEAD, THE CONTRACTOR'S ATTENTION IS DIRECTED TO ARTICLE 107-1, OF THE STANDARD SPECIFICATIONS. ANY COSTS RESULTING FROM COMPLIANCE WITH APPLICABLE STATE OR FEDERAL REGULATIONS PERTAINING TO HANDLING OF MATERIALS CONTAINING LEAD BASED PAINT SHALL BE INCLUDED IN THE BID PRICE FOR "REMOVAL OF EXISTING STRUCTURE."

THIS BRIDGE HAS BEEN DESIGNED IN ACCORDANCE WITH THE REQUIREMENTS OF THE STANDARD SPECIFICATIONS FOR SEISMIC DESIGN OF HIGHWAY BRIDGES FOR SEISMIC CATEGORY A.

DRIVE PILES AT END BENTS NO. 1 AND 2 TO A REQUIRED BEARING CAPACITY OF 90 TONS PER PILE. THE REQUIRED CAPACITY IS EQUAL TO THE ALLOWABLE BEARING CAPACITY WITH A MINIMUM FACTOR OF SAFETY OF TWO.

THE ALLOWABLE BEARING CAPACITY FOR PILES AT END BENTS NO. 1 AND 2 IS 45 TONS PER PILE.

WHEN DRIVING PILES, THE MAXIMUM BLOW COUNTS SHALL NOT BE EXCEEDED.

PILE EXCAVATION IS REQUIRED TO INSTALL PILES AT END BENTS NO. 1 AND 2. EXCAVATE HOLES TO ELEVATION 3118 FT. AND 3112 FT AT END BENTS 1 AND 2, RESPECTIVELY. SEE PILE EXCAVATION SPECIAL PROVISION.

ADT = 100 FOR YEAR 2000.

ROADWAY APPROACH EMBANKMENT SHALL BE WIDENED AS NECESSARY FOR GUARDRAIL INSTALLATION.

FOR GROUT FOR STRUCTURES, SEE SPECIAL PROVISIONS.

THE QUANTITY OF RIP RAP TO BE PAID FOR WILL BE THE ACTUAL NUMBER OF TONS OF EACH CLASS OF RIP RAP WHICH HAS BEEN INCORPORATED INTO THE COMPLETED AND ACCEPTED WORK. THE RIP RAP WILL BE MEASURED BY BEING WEIGHED IN TRUCKS ON CERTIFIED PLATFORM SCALES OR OTHER CERTIFIED WEIGHING DEVICES. THE QUANTITY OF RIP RAP WILL BE PAID FOR AT THE CONTRACT UNIT PRICE PER TON:

PLAIN RIP RAP CLASS II (2'-0" THICK)	END BENT No. 1	50	TONS
	END BENT No. 2	50	TONS
	TOTAL	100	TONS

HYDROGRAPHIC DATA:

DESIGN DISCHARGE -	1500 CFS
FREQUENCY OF DESIGN FLOOD -	25 YEAR
DESIGN HIGH WATER ELEVATION -	3151.4
DRAINAGE AREA -	5.7 SQ. MI.
BASIC DISCHARGE (Q 100) -	2200 CFS
BASIC HIGH WATER ELEVATION -	3152.2

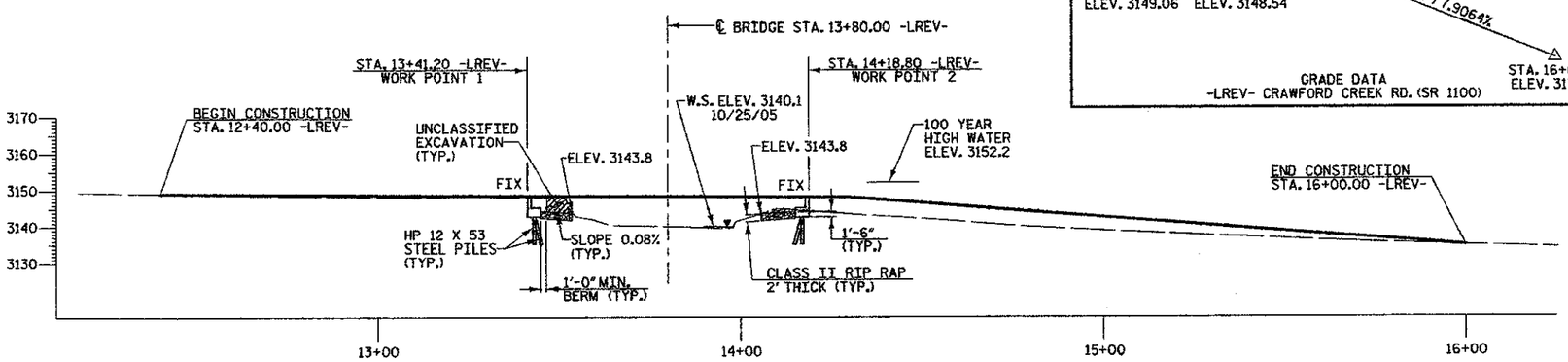

DENOTES ROADWAY FILL TO BE REMOVED

PROFILE ALONG ℄ SURVEY

SCALE : 1" = 20'

PROJECT NO. 33203

HAYWOOD COUNTY

STATION: 13+80.00 -LREV-

REPLACES BRIDGE NO. 9

STATE OF NORTH CAROLINA
DEPARTMENT OF TRANSPORTATION
RALEIGH

BRIDGE ON SR 1100 OVER CRAWFORD CREEK BETWEEN DEAD END AND US 276

24'-0" CLEAR ROADWAY - 60° SKEW

NORTH CAROLINA PROFESSIONAL SEAL 19661 ENGINEER KEVIN AUSTIN 3/3/11

PLANS PREPARED BY:
MULKEY ENGINEERS & CONSULTANTS

REVISIONS								SHEET NO.
NO.	BY:	DATE:	NO.	BY:	DATE:			2
1			3					TOTAL SHEETS
2			4					26

DRAWN BY :	W. B. ALLEN	DATE :	1/08
CHECKED BY :	R. V. KEITH	DATE :	2/08

3/3/2011 8:59:15 AM R:\Structures\B3657\B-5203_Bridge.dgn

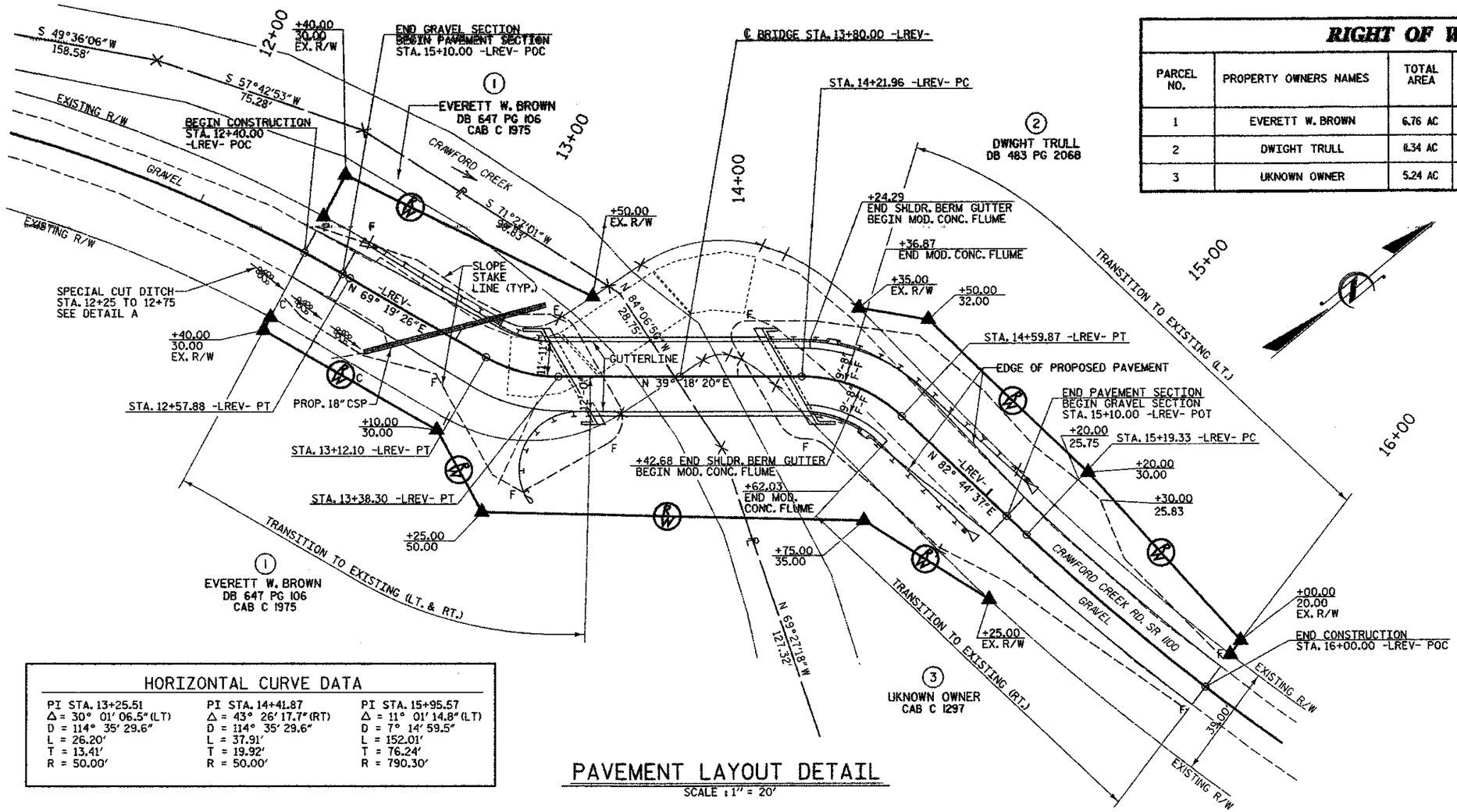

PAVEMENT LAYOUT DETAIL

SCALE : 1" = 20'

RIGHT OF WAY AREA DATA

PARCEL NO.	PROPERTY OWNERS NAMES	TOTAL AREA	AREA TAKEN	AREA REMAINING RT.	AREA REMAINING LT.	CONST. EASE.	PERM. DRAIN. EASE.	TEMP. DRAIN. EASE.
1	EVERETT W. BROWN	6.76 AC	0.18 AC	6.47 AC	0.18 AC			
2	DWIGHT TRULL	11.34 AC	2230 SF		11.29 AC			
3	UKNOWN OWNER	5.24 AC	2390 AC	5.19 AC				

DETAIL A
SPECIAL CUT DITCH
(Not to Scale)

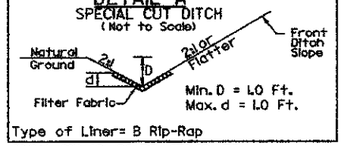

Type of Liner= B Rip-Rap

FROM STA. 12+25 TO STA. 12+75

DETAIL B
TOE PROTECTION
(Not to Scale)

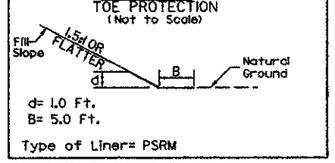

Type of Liner= PSRM

FROM STA. 14+14 TO STA. 16+00

HORIZONTAL CURVE DATA

PI STA. 13+25.51	PI STA. 14+41.87	PI STA. 15+95.57
Δ = 30° 01' 06.5" (LT)	Δ = 43° 26' 17.7" (RT)	Δ = 11° 01' 14.8" (LT)
D = 114° 35' 29.6"	D = 114° 35' 29.6"	D = 7° 14' 59.5"
L = 26.20'	L = 37.91'	L = 152.01'
T = 13.41'	T = 19.92'	T = 76.24'
R = 50.00'	R = 50.00'	R = 790.30'

DATUM DESCRIPTION

THE LOCALIZED COORDINATE SYSTEM DEVELOPED FOR THIS PROJECT IS BASED ON THE STATE PLANE COORDINATES ESTABLISHED BY NCDOT FOR MONUMENT "B2988 GPS 102"
WITH NAD 1983/95 STATE PLANE GRID COORDINATES OF
NORTHING: 623102.858(ft) EASTING: 864910.412(ft)
THE AVERAGE COMBINED GRID FACTOR USED ON THIS PROJECT (GROUND TO GRID) IS: 0.999735270
THE N.C. LAMBERT GRID BEARING AND LOCALIZED HORIZONTAL GROUND DISTANCE FROM "B2988 GPS 102" TO -LREV- STATION 12+57.88 (PT) IS
S 77°54'05" W 3204.4'
ALL LINEAR DIMENSIONS ARE LOCALIZED HORIZONTAL DISTANCES
VERTICAL DATUM USED IS NAVD 88

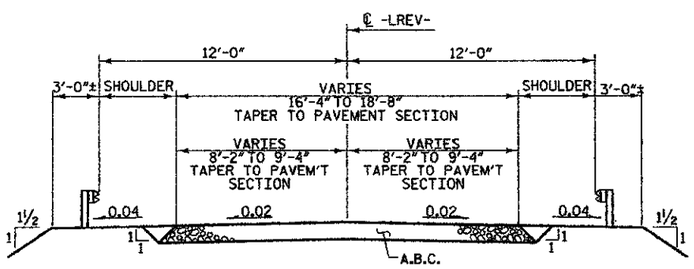

GRAVEL SECTION

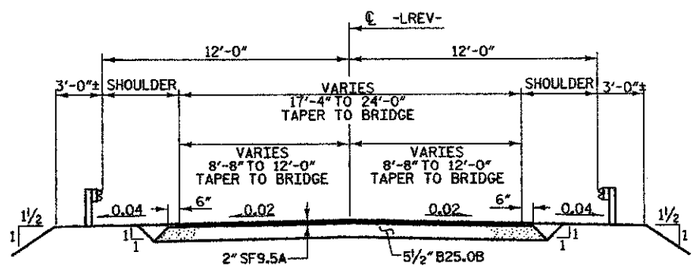

PAVEMENT SECTION

TYPICAL ROADWAY SECTIONS

WITHIN CONSTRUCTION LIMITS

PROJECT NO. 33203

HAYWOOD COUNTY

STATION: 13+80.00 -LREV-

REPLACES BRIDGE NO. 9 SHEET 1 OF 2

STATE OF NORTH CAROLINA
DEPARTMENT OF TRANSPORTATION
RALEIGH

ROADWAY DETAILS

24'-0" CLEAR ROADWAY - 60° SKEW

NORTH CAROLINA PROFESSIONAL SEAL 19661 ENGINEER KEVIN AUSTIN 3/3/11

PLANS PREPARED BY:
MULKEY ENGINEERS & CONSULTANTS
PO Box 33127
Raleigh, N.C. 27636
(919) 851-1912
(919) 851-1918 (FAX)
WWW.MULKEYINC.COM

REVISIONS							SHEET NO.
NO.	BY:	DATE:	NO.	BY:	DATE:		3
1			3				TOTAL SHEETS
2			4				26

DRAWN BY :	W. B. ALLEN	DATE :	1/08
CHECKED BY :	R. V. KEITH	DATE :	2/08

3/3/2011 6:59:41 AM R:\Structures\B3627\B_S0_00_02.dgn

MODIFIED CONCRETE FLUME
WITH CONCRETE OR RIP-RAP DITCH

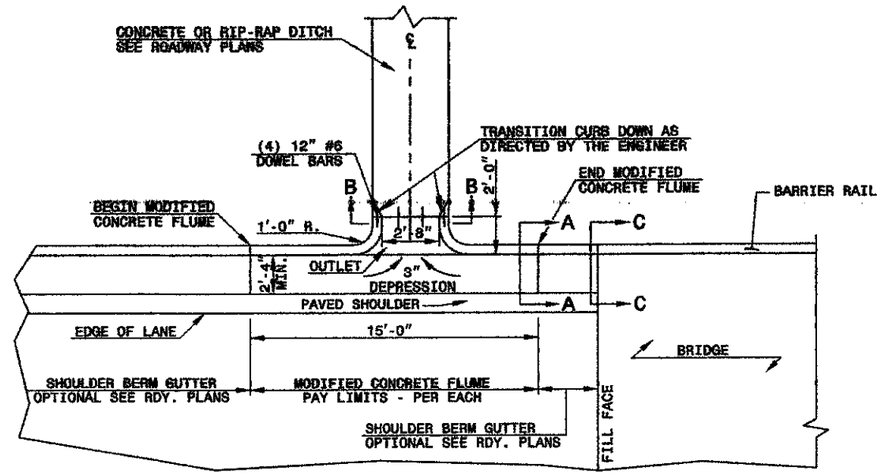

PLAN VIEW

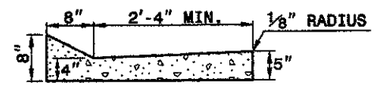

SECTION A-A

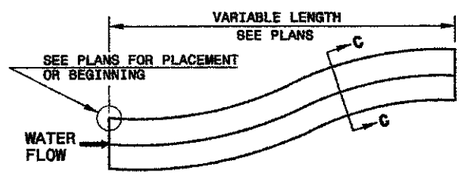

DOWNGRADE OR SAG

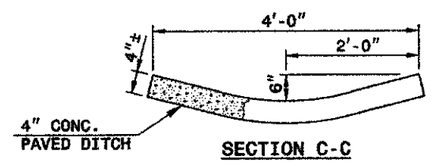

SECTION C-C

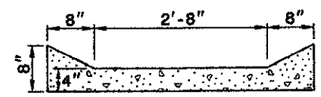

SECTION B-B

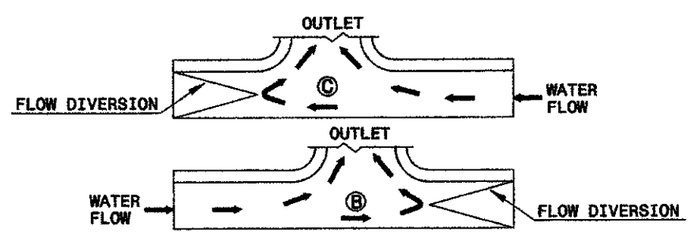

SAG

DOWN GRADE

FLOW DIVERSION EXAMPLES

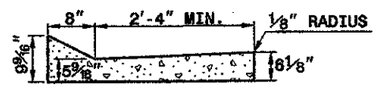

SECTION C-C

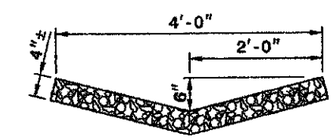

RIP-RAP LINED DITCH

NOTES:

- CONSTRUCT MODIFIED CONCRETE FLUME AND SHOULDER BERM GUTTER IN ACCORDANCE WITH THIS DETAIL.
- CONSTRUCT CONCRETE DITCH IN ACCORDANCE WITH STD. DWG. NO. 850.01.
- CONSTRUCT RIP RAP LINED DITCH IN ACCORDANCE WITH THIS DETAIL, IF CALLED FOR IN PLANS.
- CONCRETE OR RIP RAP LINED DITCH SHALL BE THE TYPE AND LENGTH SPECIFIED BY THE ROADWAY PLANS. THE DITCH SHALL TERMINATE AS SHOWN ON THE PLANS. IF NO TERMINATION IS INDICATED PLACE RIP-RAP AT THE END OF THE DITCH AS INDICATED BY STD. DWG. 876.02 FOR AN 18" PIPE. TRANSITIONS FROM THE DITCH TO TERMINATION SHALL BE AS DIRECTED BY THE ENGINEER.
- MODIFICATIONS SHALL BE AS DICTATED BY SITE CONDITIONS AND DIRECTED BY THE ENGINEER.

MODIFIED CONCRETE FLUME
WITH CONCRETE OR RIP-RAP DITCH

PROJECT NO. 33203

HAYWOOD COUNTY

STATION: 13+80.00 -LREV-

REPLACES BRIDGE NO. 9 SHEET 2 OF 2

STATE OF NORTH CAROLINA
DEPARTMENT OF TRANSPORTATION
RALEIGH

ROADWAY DETAILS

24'-0" CLEAR ROADWAY - 60° SKEW

NORTH CAROLINA PROFESSIONAL ENGINEER SEAL 19661 L. KEVIN AUSTIN 3/3/10

PLANS PREPARED BY:
MULKEY ENGINEERS & CONSULTANTS

REVISIONS						SHEET NO.
NO.	BY:	DATE:	NO.	BY:	DATE:	4
1			3			TOTAL SHEETS
2			4			26

DRAWN BY :	W. B. ALLEN	DATE :	1/08
CHECKED BY :	R. V. KEITH	DATE :	2/08

3/3/2010 9:00:05 AM R:\Structures\B3657(9)_SD_GD_03.dgn

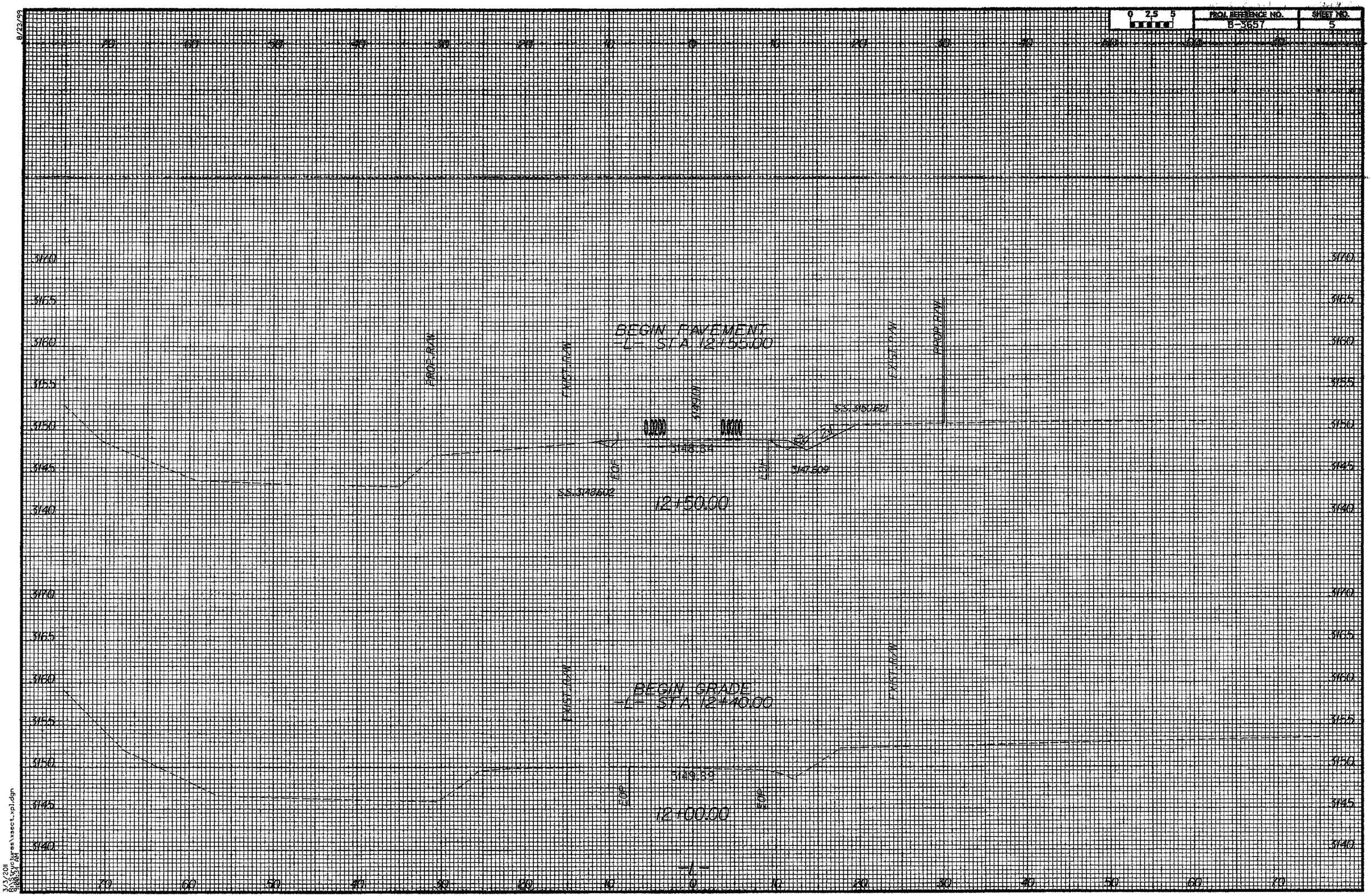
0 2.5 5
PROJ. REFERENCE NO.
B-3657
SHEET NO.
5
8/23/99
3140
3165
3160
3155
3150
3145
3140
BEGIN PAVEMENT
-L- STA 12+55.00
EXIST. R/W
EXIST. R/W
EXIST. R/W
EXIST. R/W
SLOPE
SS.3150621
3148.84
3147.509
EOP
EOP
SS.3143602
12+50.00
BEGIN GRADE
-L- STA 12+40.00
3149.88
EOP
EOP
12+00.00
-L-
3/3/2011
8:06:35 AM
c:\pwworking\ecu\d0835\ecu_tmpres\xsect_xpl.dgn

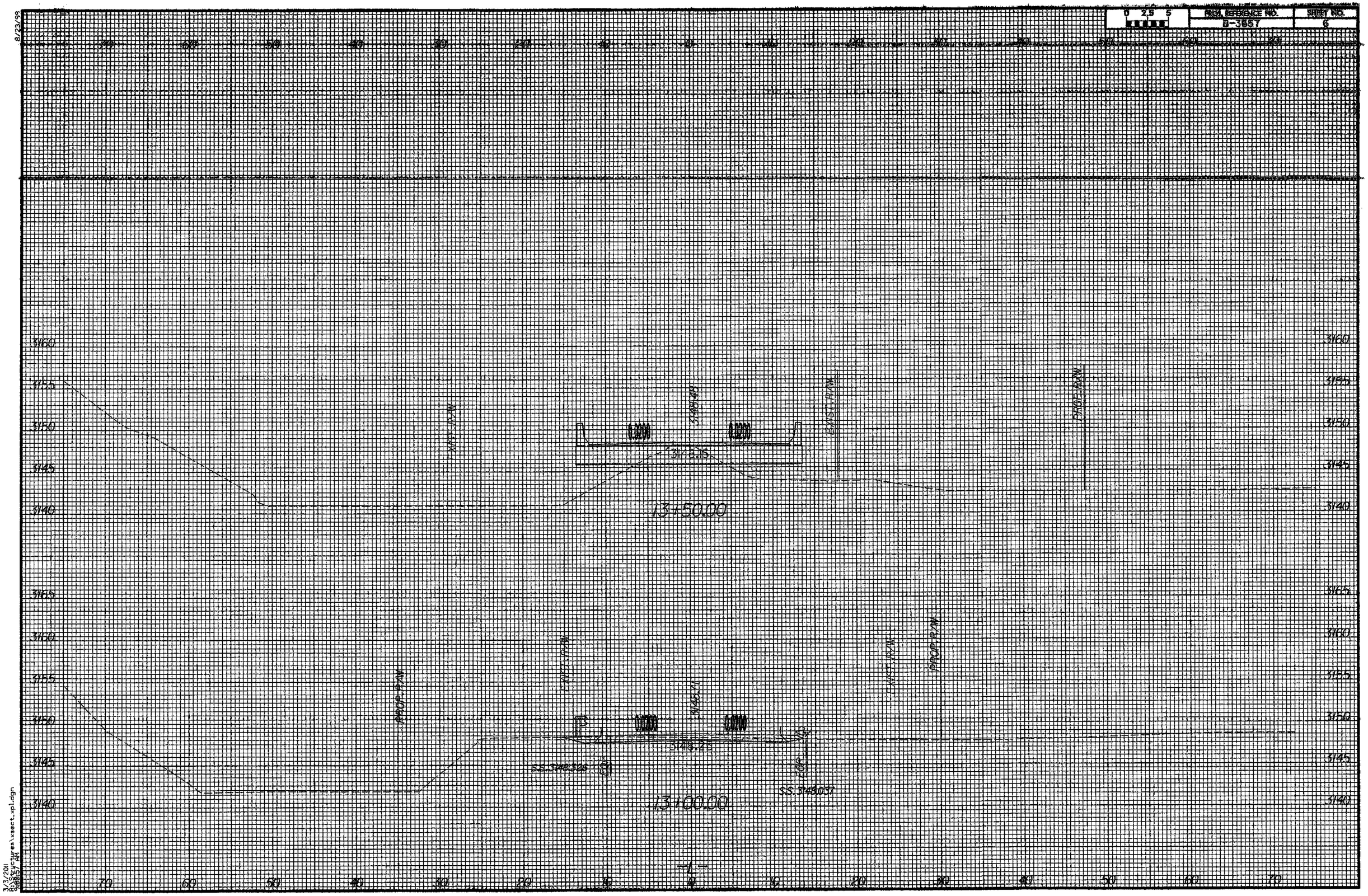

8/23/99

3/3/2011
9:00:57 AM
C:\pwworking\usrsecs\xsect_xpl.dgn

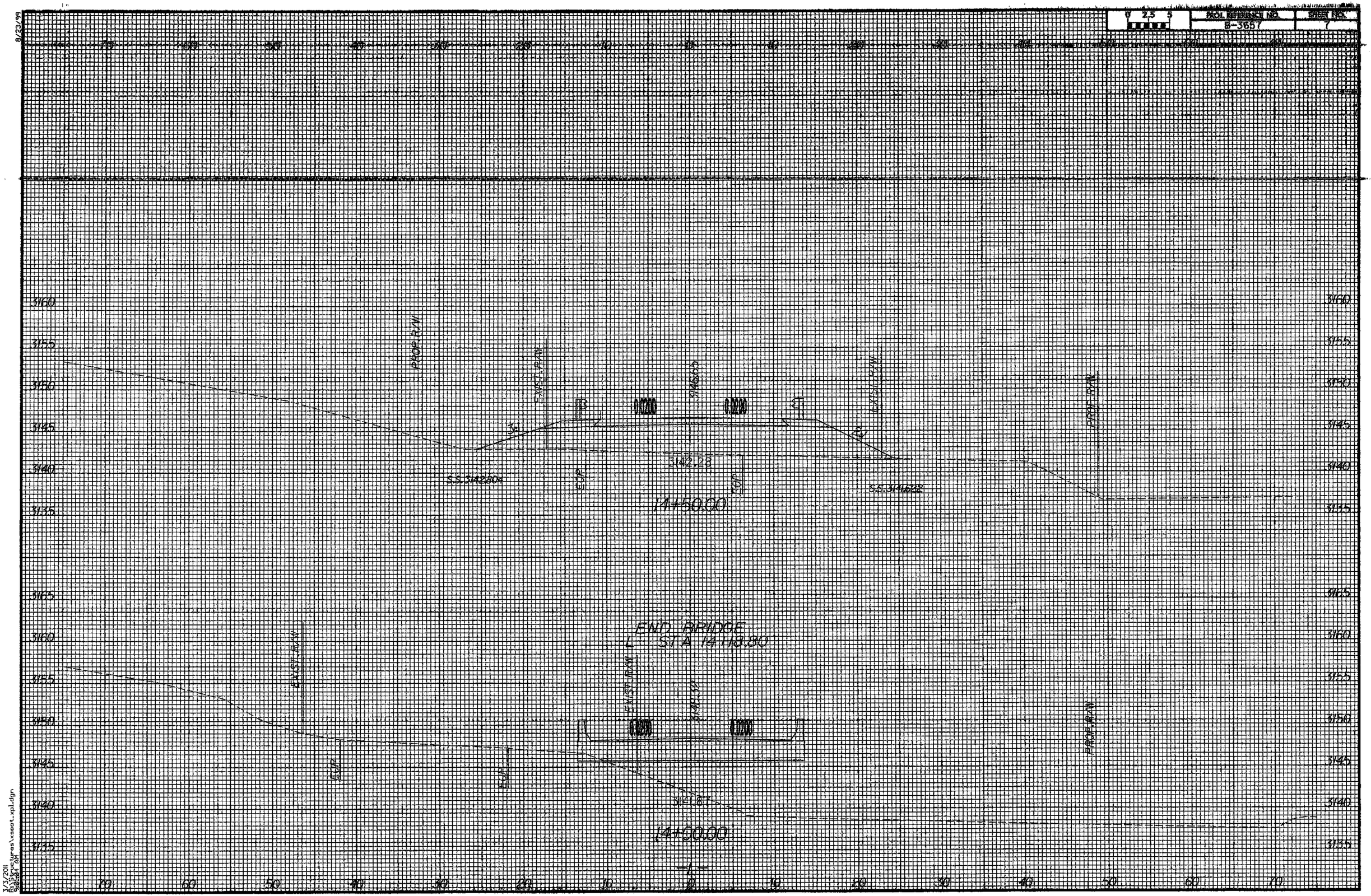
0 2.5 5
PROJ. REFERENCE NO.
B-3657
SHEET NO.
7
8/23/99
3160
3155
3150
3145
3140
3135
PROP. R/W
EXIST. R/W
S.S. 3142.04
ECP
3142.28
EOP
S.S. 3146.22
14+50.00
END BRIDGE
STA 14+18.80
EXIST. R/W
3142.67
14+00.00
70
60
50
40
30
20
10
0
10
20
30
40
50
60
70
7/5/2011
9:01:36 AM
Structures\xsect_xpl.dgn

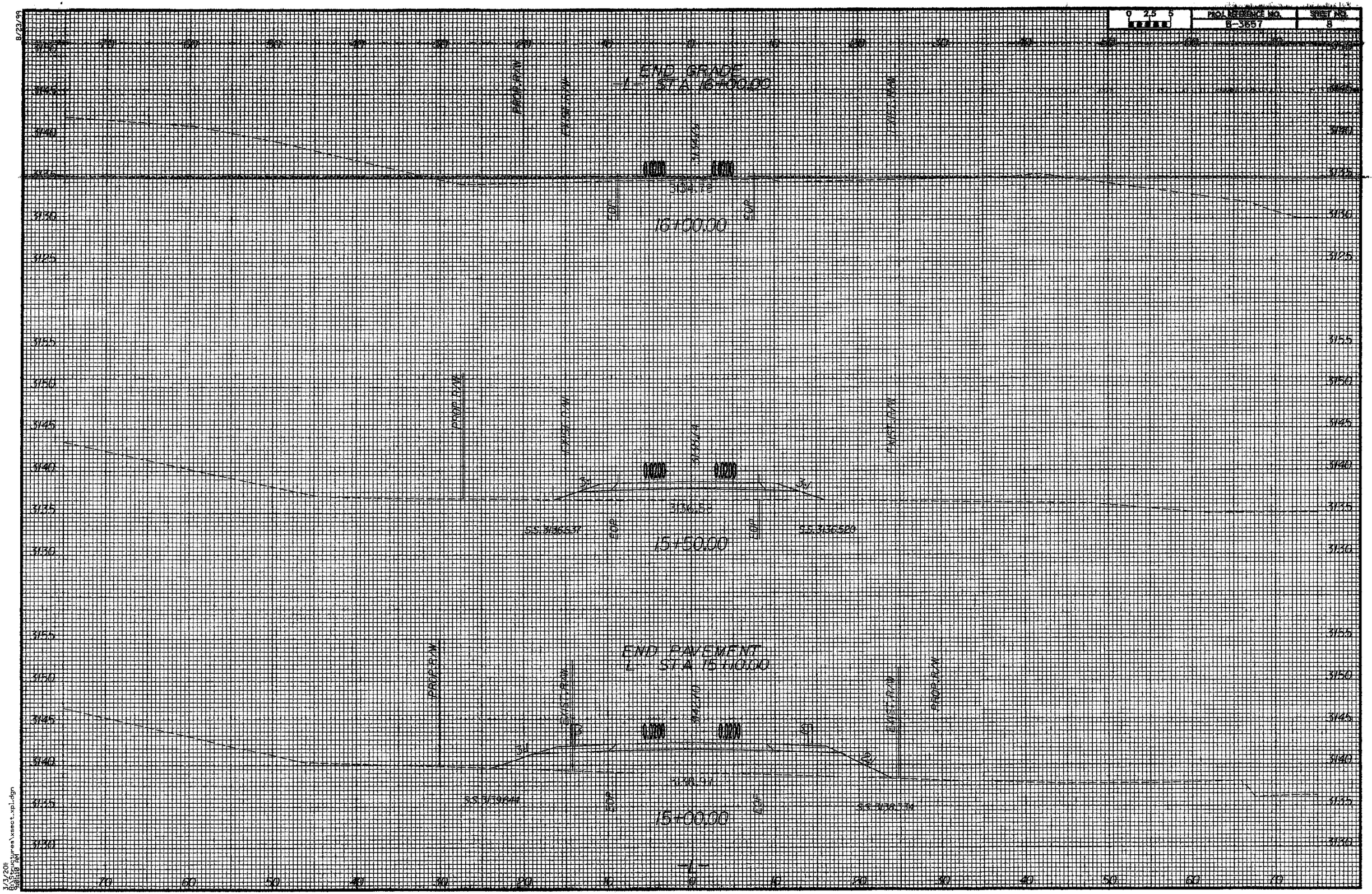

8/23/99

7/3/2011
8:30:10 AM
R:\Structures\xsect_xpl.dgn

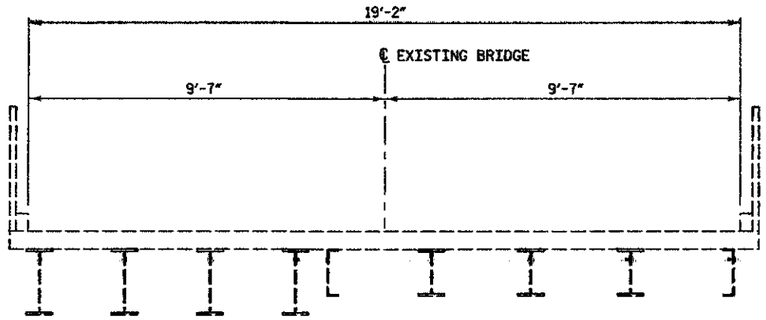

EXISTING BRIDGE

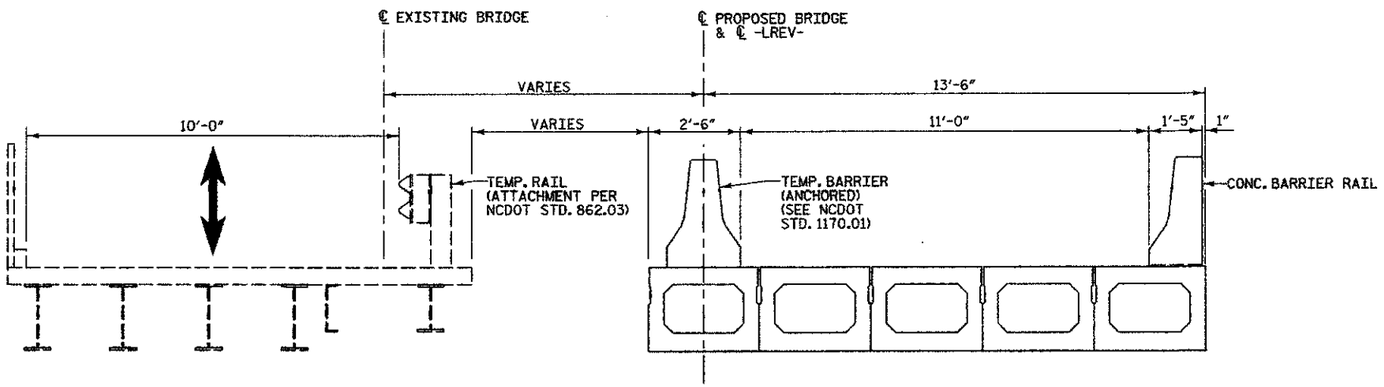

STAGE 1 CONSTRUCTION

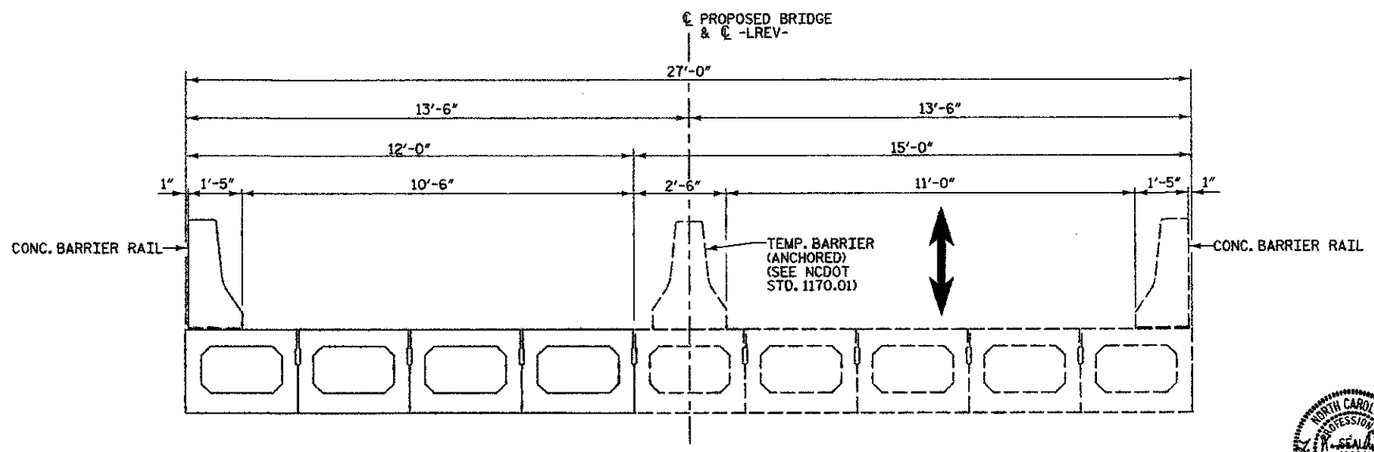

STAGE 2 CONSTRUCTION

PROJECT NO. 33203

HAYWOOD COUNTY

STATION: 13+80.00 -LREV-

REPLACES BRIDGE NO. 9

STATE OF NORTH CAROLINA
DEPARTMENT OF TRANSPORTATION
RALEIGH

CONSTRUCTION STAGING

24'-0" CLEAR ROADWAY - 60° SKEW

NORTH CAROLINA PROFESSIONAL SEAL 19661 ENGINEER L. KEVIN AUSTIN 3/3/08

PLANS PREPARED BY:
MULKEY ENGINEERS & CONSULTANTS

REVISIONS								SHEET NO.
NO.	BY:	DATE:	NO.	BY:	DATE:			9
1			3					TOTAL SHEETS
2			4					26

DRAWN BY :	W. B. ALLEN	DATE :	1/08
CHECKED BY :	R. V. KEITH	DATE :	2/08

3/3/2008 9:01:48 AM R:\Structures\B3657\B3657B_SD_PC_CS.dgn

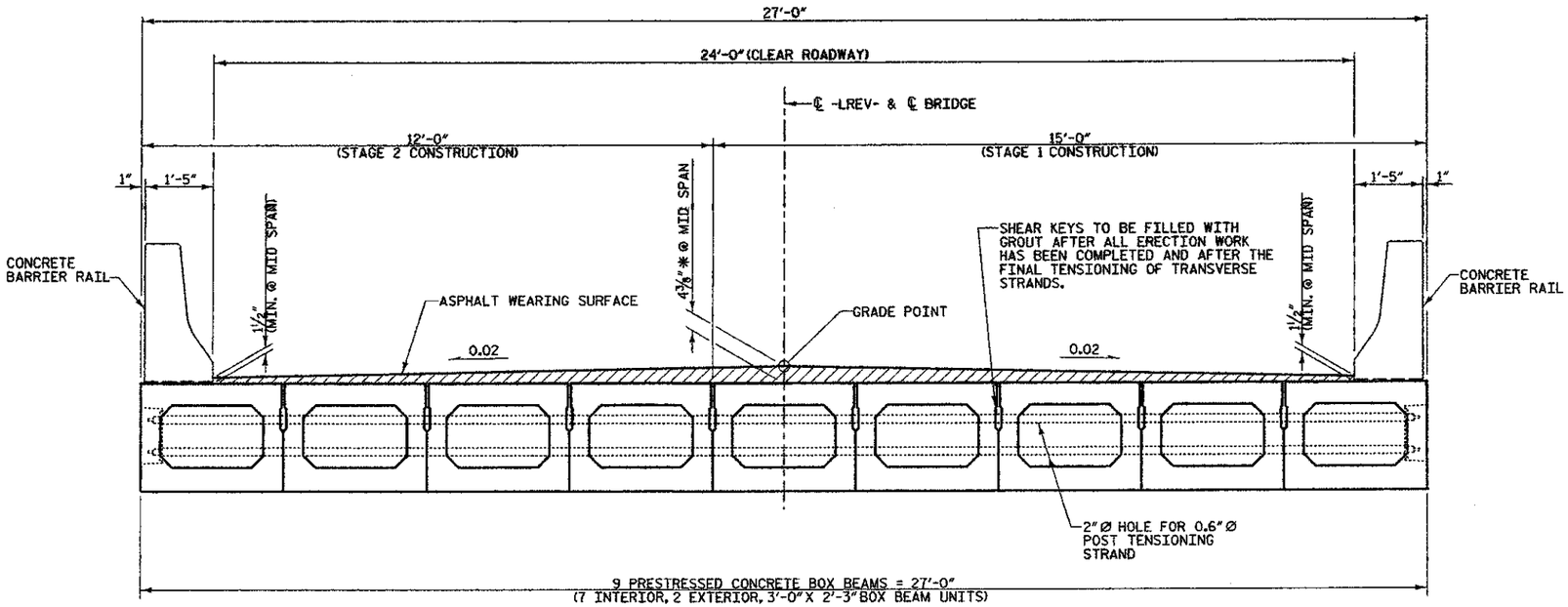

TYPICAL SECTION

*BASED ON PREDICTED FINAL CAMBER AND THEORETICAL GRADE LINE ELEVATIONS

FIXED END

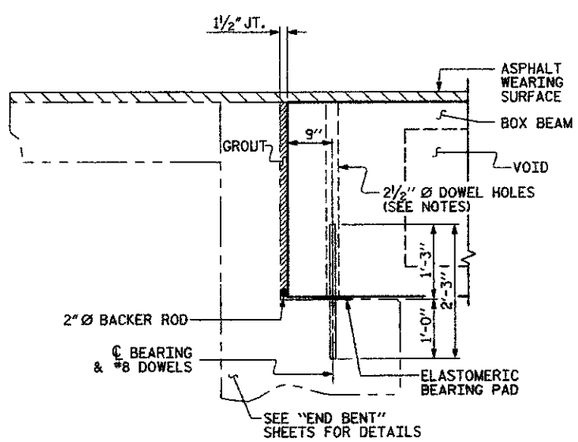

SECTION AT END BENTS

NOTES

ALL PRESTRESSING STRANDS SHALL BE 7-WIRE LOW RELAXATION GRADE 270 STRANDS AND SHALL CONFORM TO AASHTO M203 EXCEPT FOR SAMPLING REQUIREMENTS WHICH SHALL BE IN ACCORDANCE WITH THE STANDARD SPECIFICATIONS.

ALL REINFORCING STEEL CAST WITH THE BOX BEAM SECTIONS SHALL BE GRADE 60 AND SHALL BE INCLUDED IN THE UNIT PRICE BID FOR PRESTRESSED CONCRETE BOX BEAMS.

RECESSES FOR TRANSVERSE STRANDS SHALL BE GROUTED AFTER THE TENSIONING OF THE STRANDS.

THE 2½" Ø DOWEL HOLES AT FIXED ENDS OF BOX BEAM SECTIONS SHALL BE FILLED WITH GROUT.

THE 2" Ø BACKER ROD SHALL CONFORM TO THE REQUIREMENTS OF TYPE M BOND BREAKER, SEE SECTION 1028 OF THE STANDARD SPECIFICATIONS.

THE TRANSFER OF LOAD FROM THE ANCHORAGES TO THE BOX BEAM UNIT SHALL BE DONE WHEN THE CONCRETE HAS REACHED A COMPRESSIVE STRENGTH OF NOT LESS THAN 6200 PSI.

ALL REINFORCING STEEL IN BARRIER RAILS SHALL BE EPOXY COATED.

PRESTRESSING STRANDS SHALL BE CUT FLUSH WITH THE BOX BEAM UNIT ENDS.

APPLY EPOXY PROTECTIVE COATING TO BOX BEAM UNIT ENDS.

THE LOCATION OF THE VOID DRAINS MAY BE SHIFTED SLIGHTLY WHERE NECESSARY TO CLEAR PRESTRESSING STRANDS OR TRANSVERSE REINFORCING STEEL.

FOR GROUT FOR STRUCTURES, SEE SPECIAL PROVISIONS.

FOR PRESTRESSED CONCRETE MEMBERS, SEE SPECIAL PROVISIONS.

WHEN BOX BEAMS ARE CAST, A POSITIVE HOLD DOWN SYSYTEM SHALL BE EMPLOYED TO PREVENT VOIDS FROM RISING OR MOVING SIDEWAYS.

PROJECT NO. 33203

HAYWOOD COUNTY

STATION: 13+80.00 -LREV-

SHEET 1 OF 4

STATE OF NORTH CAROLINA
DEPARTMENT OF TRANSPORTATION
RALEIGH

STANDARD
3'-0" X 2'-3"
PRESTRESSED CONCRETE
BOX BEAM UNIT

STD. NO. PCBB1

REVISIONS								SHEET NO.
NO.	BY:	DATE:	NO.	BY:	DATE:			10
1			3					TOTAL SHEETS
2			4					26

THIS STANDARD DRAWING REVIEWED & ADOPTED FOR USE AT THE REFERENCED LOCATION BY THE UNDERSIGNED:

NORTH CAROLINA PROFESSIONAL SEAL 19661 ENGINEER L. KEVIN AUSTIN 3/3/11

PLANS PREPARED BY:
MULKEY ENGINEERS & CONSULTANTS
PO Box 33127
Raleigh, N.C. 27636
(919) 851-1912
(919) 851-1918 (FAX)
WWW.MULKEYINC.COM

ASSEMBLED BY : W. B. ALLEN		DATE : 1/08	
CHECKED BY : R. V. KEITH		DATE : 2/08	
DRAWN BY : TLA 5/05	ADDED 7/11/05R		
CHECKED BY : GM 6/05	REV. 5/1/06R	KMM/GM	

3/3/2011 10:24:37 AM R:\Structures\B3657(9)_SD_BB_01.dgn

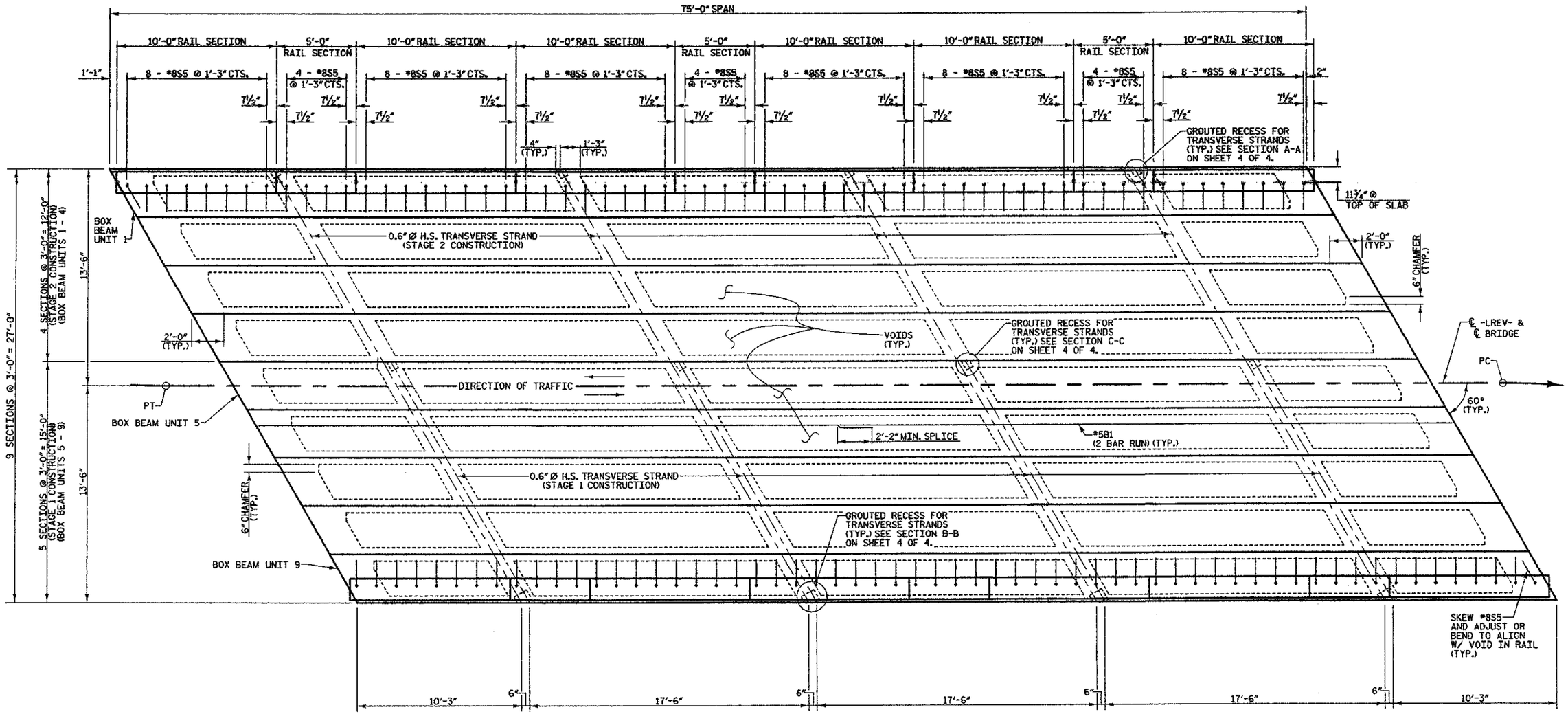

PLAN OF SPAN

DEAD LOAD DEFLECTION AND CAMBER	
	3'-0" x 2'-3"
	0.6" Ø L.R. STRAND
	SPAN "A"
CAMBER (BEAM ALONE IN PLACE)	4½" UP
DEFLECTION DUE TO CONCRETE WEARING SURFACE	7/16" DOWN
FINAL CAMBER	4 1/16" UP

BOX BEAM UNITS REQUIRED			
	NUMBER	LENGTH	TOTAL LENGTH
SPAN A	9	75'-0"	675'-0"
TOTAL	9	——	

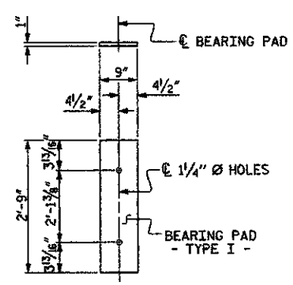

FIXED END
(TYPE I - 18 REQ'D)

ELASTOMERIC BEARING DETAILS

PROJECT NO. 33203

HAYWOOD COUNTY

STATION: 13+80.00 -LREV-

REPLACES BRIDGE NO. 9 SHEET 2 OF 4

STATE OF NORTH CAROLINA
DEPARTMENT OF TRANSPORTATION
RALEIGH

PRESTRESSED CONCRETE BOX BEAM 70' SPAN

24'-0" CLEAR ROADWAY - 60° SKEW

NORTH CAROLINA PROFESSIONAL SEAL 19661 ENGINEER L. KEVIN AUSTIN 3/3/08

PLANS PREPARED BY: MULKEY ENGINEERS & CONSULTANTS

REVISIONS							SHEET NO.
NO.	BY:	DATE:	NO.	BY:	DATE:		11
1			3				TOTAL SHEETS
2			4				26

DRAWN BY: W. B. ALLEN DATE: 1/08
CHECKED BY: R. V. KEITH DATE: 2/08

3/3/2008 9:03:20 AM R:\Structures\B3303\B_SD_S1.dgn

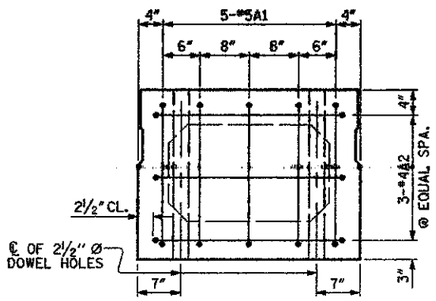

END ELEVATION

SHOWING PLACEMENT OF #5 & #4 "A" BARS AND LOCATION OF DOWEL HOLES. (INTERIOR BOX BEAM SECTION SHOWN-EXTERIOR SECTION SIMILAR EXCEPT SHEAR KEY LOCATION. STRAND LAYOUT NOT SHOWN.)

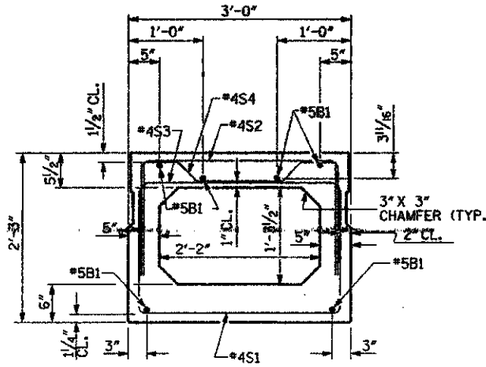

INTERIOR BOX BEAM SECTION

(STRAND LAYOUT NOT SHOWN)

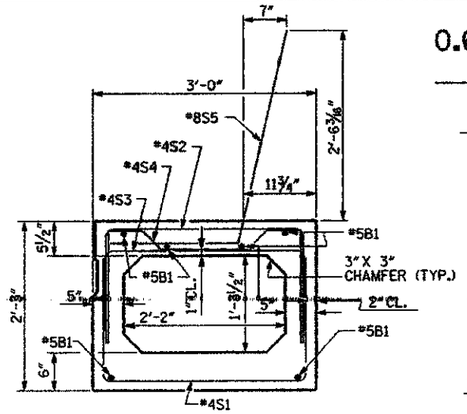

EXTERIOR BOX BEAM SECTION

(STRAND LAYOUT NOT SHOWN)

0.6" Ø LOW RELAXATION STRAND LAYOUT

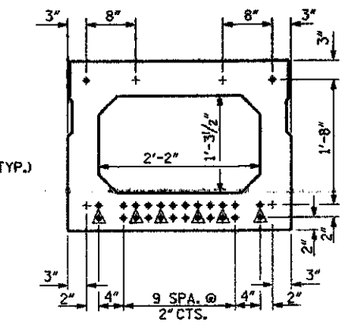

TYPICAL STRAND LOCATION

(26 STRANDS REQUIRED)

(INTERIOR BOX BEAM SECTION SHOWN-EXTERIOR SECTION SIMILAR EXCEPT SHEAR KEY LOCATION)

DEBONDING LEGEND

- ● FULLY BONDED STRANDS
- ▲ STRANDS DEBONDED FOR 5'-0" FROM END OF GIRDER

BOND SHALL BE BROKEN ON STRANDS AS SHOWN FOR THE SPECIFIED LENGTH FROM EACH END OF THE BOX BEAM. SEE STANDARD SPECIFICATIONS ARTICLE 1078-7.

BAR TYPES

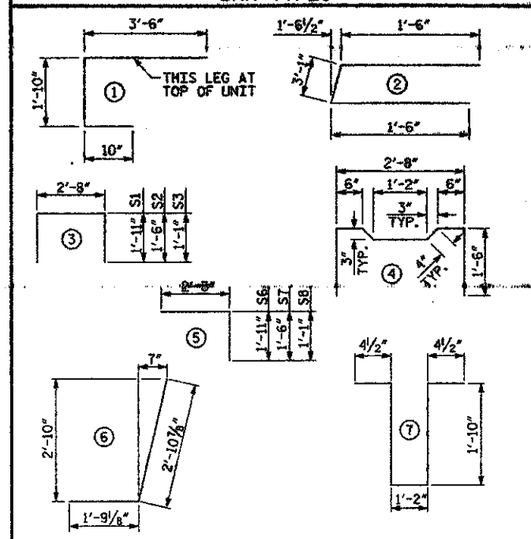

ALL BAR DIMENSIONS ARE OUT TO OUT

BILL OF MATERIAL FOR ONE BOX BEAM SECTION

BAR	NUMBER	SIZE	TYPE	EXTERIOR UNIT LENGTH	EXTERIOR UNIT WEIGHT	INTERIOR UNIT LENGTH	INTERIOR UNIT WEIGHT
A1	10	#5	1	6'-2"	64	6'-2"	64
A2	22	#4	2	6'-1"	89	6'-1"	89
B1	12	#5	STR	38'-7"	483	38'-7"	483
K1	12	#4	7	5'-7"	45	5'-7"	45
K2	8	#4	STR	2'-9"	15		15
S1	52	#4	3	6'-6"	226	6'-6"	226
S2	52	#4	3	5'-8"	197	5'-8"	197
S3	93	#4	3	4'-10"	300	4'-10"	300
S4	43	#4	4	5'-10"	168	5'-10"	168
S6	28	#4	5	4'-4"	81	4'-4"	81
S7	28	#4	5	3'-11"	73	3'-11"	73
S8	28	#4	5	3'-6"	65	3'-6"	65
* S5	60	#8	6	4'-8"	748	--	--
REINFORCING STEEL					1806 LBS.		1806 LBS.
* EPOXY COATED REINF. STEEL					748 LBS.		
7300 P.S.I. CONCRETE					12.3 CU. YDS.		12.2 CU. YDS.
0.6" Ø L.R. STRANDS					No. 26	No.	26

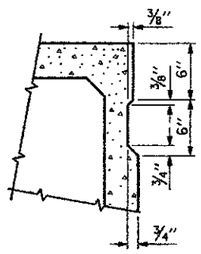

SHEAR KEY DETAIL

NOTE: OMIT SHEAR KEY ON OUTSIDE FACE OF EXTERIOR BOX BEAMS.

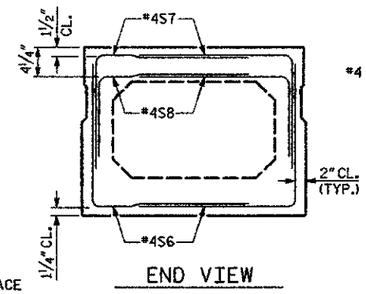

END VIEW

(SHOWING #4 "S" BARS IN END OF BEAM)

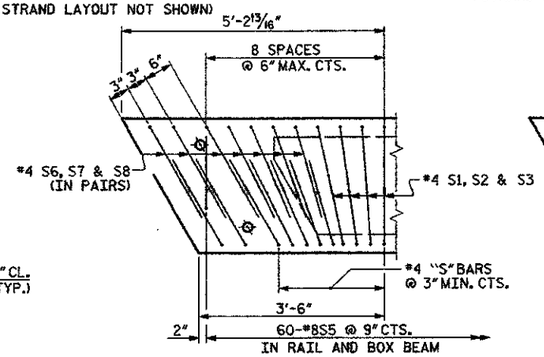

DETAIL "B"

EXTERIOR UNIT SHOWN, INTERIOR UNIT SIMILAR EXCEPT OMIT #8S5 BARS. "B" BARS AND "A" BARS NOT SHOWN.

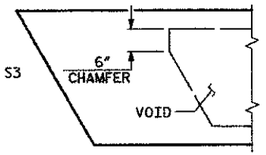

CHAMFER DETAIL

SHOWING 6" VOID CHAMFER

GRADE 270 STRANDS

	0.6" Ø L.R.
AREA (SQUARE INCHES)	0.217
ULTIMATE STRENGTH (LBS. PER STRAND)	58,600
APPLIED PRESTRESS (LBS. PER STRAND)	43,950

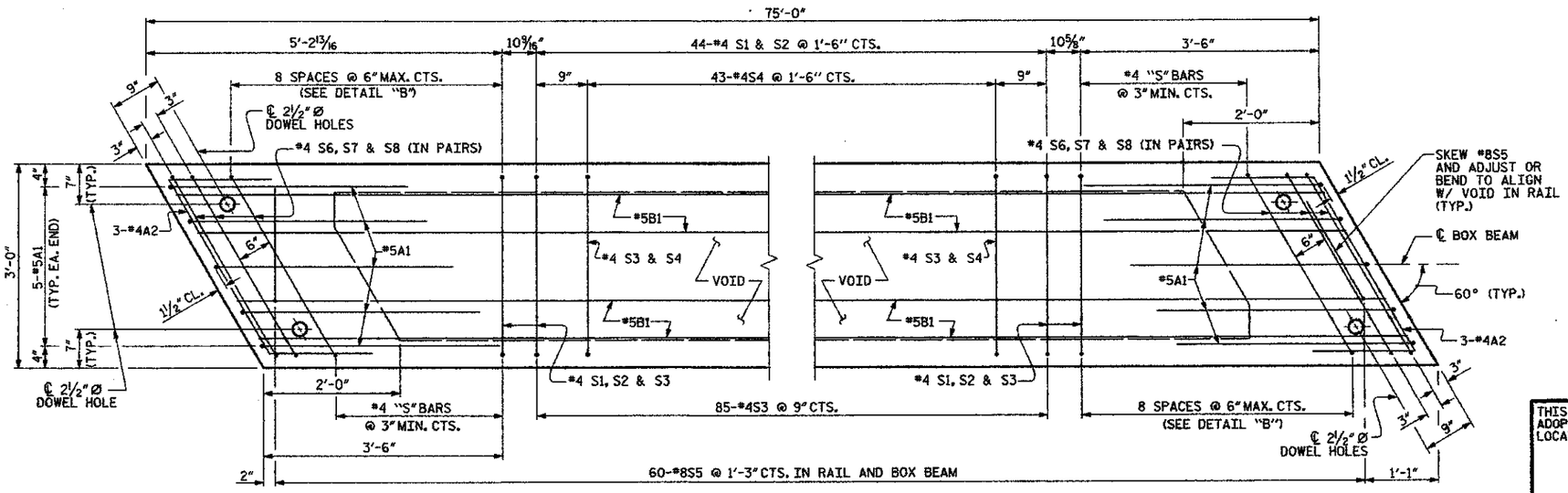

PLAN OF BOX BEAM

EXTERIOR UNIT SHOWN, INTERIOR UNIT SIMILAR EXCEPT OMIT #8 S5 BARS.
FOR LOCATION OF DIAPHRAGMS, SEE PLAN OF SPANS.
FOR REINFORCING STEEL IN DIAPHRAGMS, SEE DIAPHRAGM DETAILS.

PROJECT NO. 33203
HAYWOOD COUNTY
STATION: 13+80.00 -LREV-

SHEET 3 OF 4

STATE OF NORTH CAROLINA
DEPARTMENT OF TRANSPORTATION
RALEIGH

STANDARD
3'-0" X 2'-3"
PRESTRESSED CONCRETE
BOX BEAM UNIT (SPAN "A")

STD. NO. PCBB2

THIS STANDARD DRAWING REVIEWED & ADOPTED FOR USE AT THE REFERENCED LOCATION BY THE UNDERSIGNED:

NORTH CAROLINA PROFESSIONAL ENGINEER SEAL 19661 KEVIN AUSTIN
3/3/11

PLANS PREPARED BY:
MULKEY ENGINEERS & CONSULTANTS

REVISIONS						SHEET NO.
NO.	BY:	DATE:	NO.	BY:	DATE:	12
1			3			TOTAL SHEETS
2			4			26

ASSEMBLED BY : W. B. ALLEN DATE : 1/08
CHECKED BY : R. V. KEITH DATE : 2/08
DRAWN BY : TLA 5/05
CHECKED BY : GM 6/05
ADDED 7/11/05
REV. 5/1/06 TLA/GM

3/3/2011 9:04:03 AM R:\Structures\33567(5)_SD_BB_02.dgn

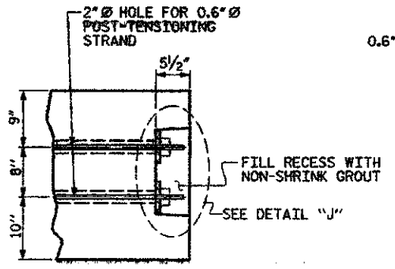

PART SECTION AT RECESS

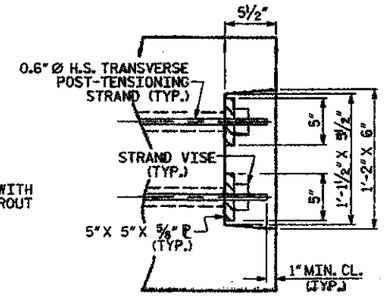

DETAIL "J"

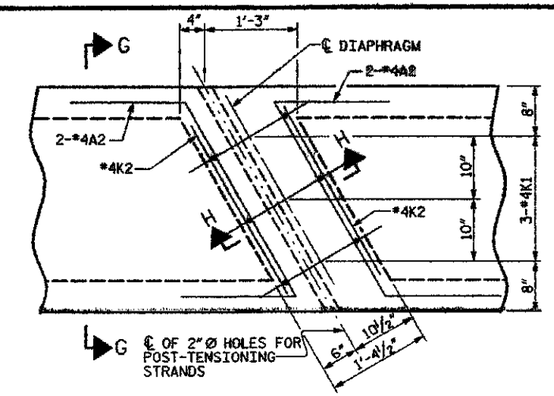

PLAN

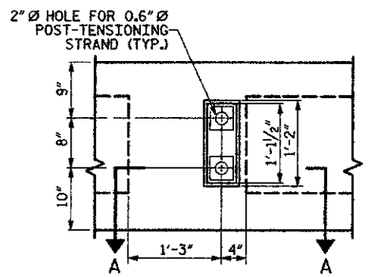

ELEVATION

SHOWING VIEW OF GROUTED RECESS @ BOX BEAM 1

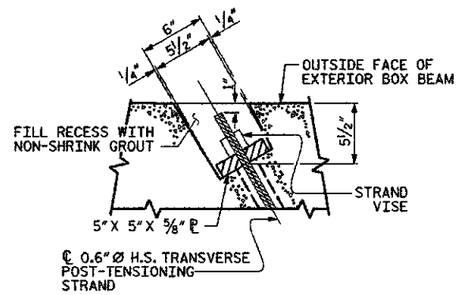

SECTION A-A

SHOWING PLAN VIEW OF GROUTED RECESS @ BOX BEAM 1

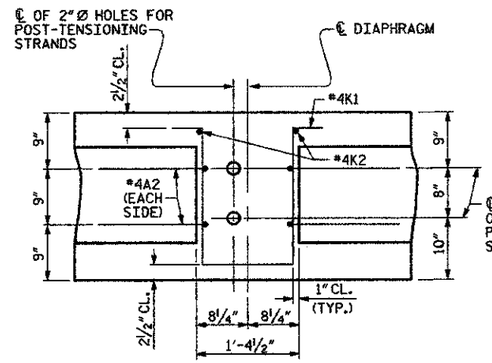

SECTION H-H

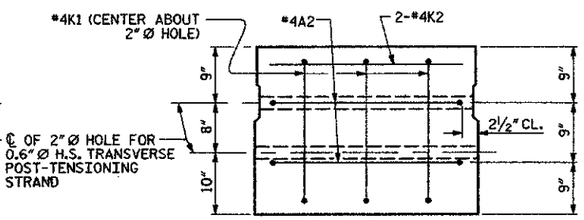

SECTION G-G

VOIDS NOT SHOWN

DOUBLE DIAPHRAGM DETAILS

#4 "S" BARS NOT SHOWN. #4 "S" BARS MAY BE SHIFTED SLIGHTLY TO CLEAR 2" Ø HOLE.

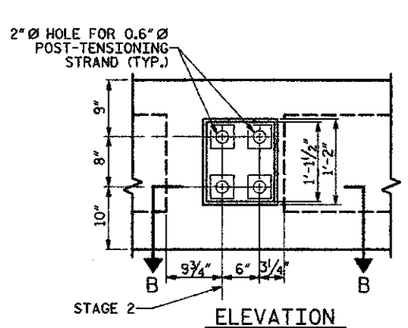

ELEVATION

SHOWING VIEW OF GROUTED RECESS @ BOX BEAM 9

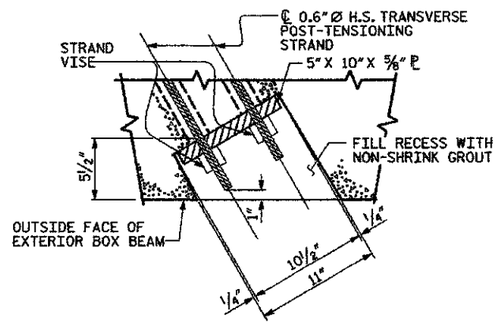

SECTION B-B

SHOWING PLAN VIEW OF GROUTED RECESS @ BOX BEAM 9

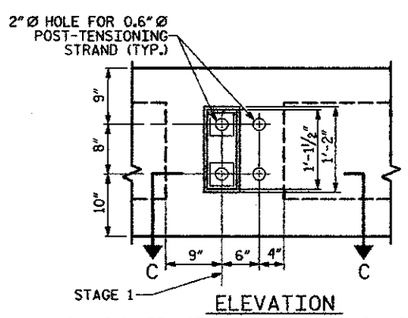

ELEVATION

SHOWING VIEW OF GROUTED RECESS @ BOX BEAM 5

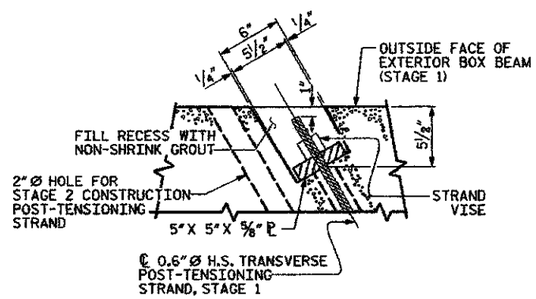

SECTION C-C

SHOWING PLAN VIEW OF GROUTED RECESS @ BOX BEAM 5

GROUTED RECESS DETAIL AT END OF POST-TENSIONED STRANDS OF BOX BEAM

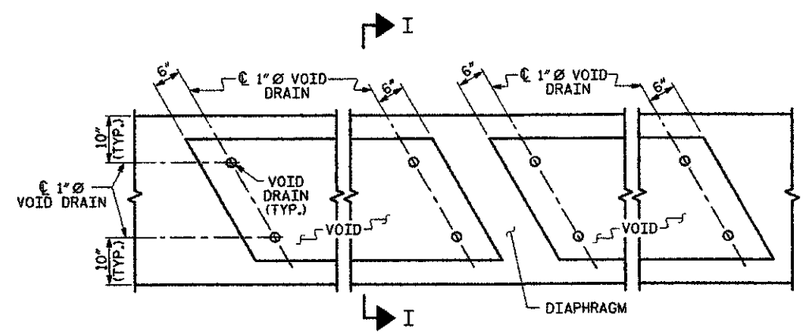

PART PLAN

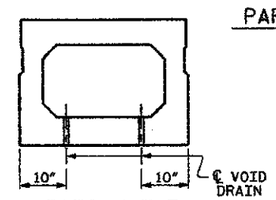

SECTION I-I

VOID DRAIN DETAILS

(DIMENSIONS SHOWN ARE TYPICAL FOR EACH VOID)

PROJECT NO. 33203

HAYWOOD COUNTY

STATION: 13+80.00 -LREV-

SHEET 4 OF 4

STATE OF NORTH CAROLINA
DEPARTMENT OF TRANSPORTATION
RALEIGH

3'-0" X 2'-3" PRESTRESSED CONCRETE BOX BEAM UNIT

NORTH CAROLINA PROFESSIONAL SEAL 19661 ENGINEER L. KEVIN AUSTIN 3/3/11

PLANS PREPARED BY: MULKEY ENGINEERS & CONSULTANTS

REVISIONS						SHEET NO.
NO.	BY:	DATE:	NO.	BY:	DATE:	13
1			3			TOTAL SHEETS
2			4			26

DRAWN BY :	W. B. ALLEN	DATE :	1/08
CHECKED BY :	R. V. KEITH	DATE :	2/08

3/3/2011 9:04:42 AM R:\Structures\B3657\B-5D_BB_03.dgn

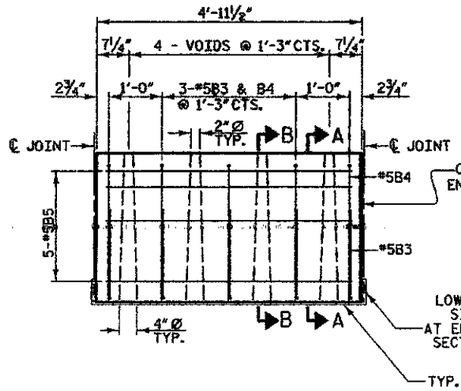

TYPICAL 5'-0" PRECAST UNIT

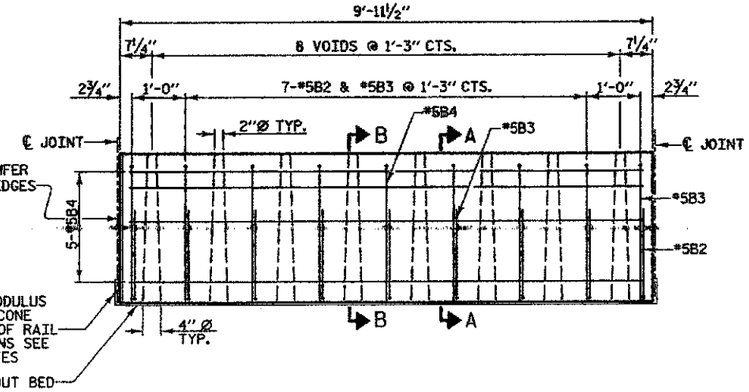

TYPICAL 10'-0" PRECAST UNIT

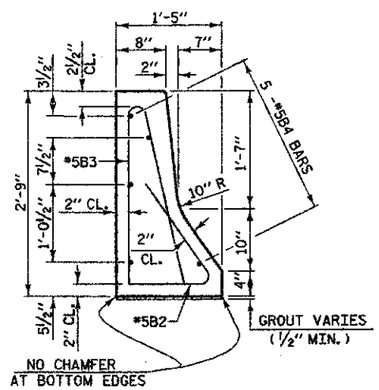

SECTION A-A

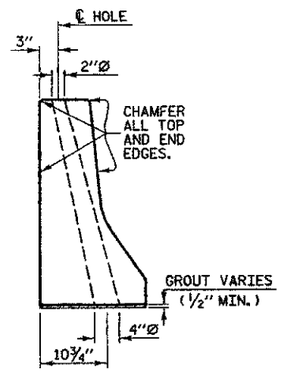

SECTION B-B

NOTES

EACH PRECAST RAIL UNIT SHALL BE CAST WITH CLASS AA CONCRETE.

RAIL TO BE FLUSH WITH BOX BEAM UNITS AT EACH END OF SPAN.

GROUT SHALL BE 5" ABOVE BOTTOM OF THE RAIL BETWEEN RAIL SECTIONS EXCEPT AT BENTS WHERE LOW MODULUS SILICONE SHALL BE SUBSTITUTED IN PLACE OF GROUT.

EACH PRECAST RAIL UNIT SHALL BE SUPPLIED WITH LIFTING DEVICE(S). NO CABLES ARE TO BE WRAPPED AROUND THE RAIL UNITS FOR LIFTING.

THE EXPANSION JOINT SEALER SHALL BE LOW MODULUS SILICONE SEALANT. SEE SECTION 1028-4 OF THE STANDARD SPECIFICATIONS.

CONCRETE CHAMFERS:
UNLESS OTHERWISE NOTED ON THE PLANS, ALL EXPOSED CORNERS ON STRUCTURES SHALL BE CHAMFERED ¾" WITH THE FOLLOWING EXCEPTIONS: TOP CORNERS OF CURBS MAY BE ROUNDED TO 1½" RADIUS WHICH IS BUILT INTO CURB FORMS; CORNERS OF TRANSVERSE FLOOR EXPANSION JOINTS SHALL BE ROUNDED WITH A ¼" FINISHING TOOL UNLESS OTHERWISE REQUIRED ON PLANS; AND CORNERS OF EXPANSION JOINTS IN THE ROADWAY FACES AND TOPS OF CURBS AND SIDEWALKS SHALL BE ROUNDED TO A ¼" RADIUS WITH A FINISHING STONE OR TOOL UNLESS OTHERWISE SHOWN ON PLANS.

NO DECK DRAINS ALLOWED.

BILL OF MATERIAL FOR ONE 5'-0" RAIL SECTION

BAR	NO.	SIZE	TYPE	LENGTH	WEIGHT
B3	5	*5	1	2'-8"	14
B4	5	*5	2	4'-11"	26
B6	5	*5	STR.	4'-7"	24
REINFORCING STEEL LBS. =					64
CLASS AA CONCRETE CU. YDS. =					0.5

BILL OF MATERIAL FOR ONE 10'-0" RAIL SECTION

BAR	NO.	SIZE	TYPE	LENGTH	WEIGHT
B2	9	*5	1	2'-8"	25
B3	9	*5	2	4'-11"	46
B4	5	*5	STR.	9'-7"	50
REINFORCING STEEL LBS. =					121
CLASS AA CONCRETE CU. YDS. =					1.0

BAR TYPES

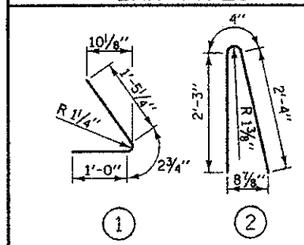

ALL BAR DIMENSIONS ARE OUT TO OUT

PROJECT NO. 33203

HAYWOOD COUNTY

STATION: 13+80.00 -LREV-

REPLACES BRIDGE NO. 9

STATE OF NORTH CAROLINA
DEPARTMENT OF TRANSPORTATION
RALEIGH

STANDARD
PRECAST CONCRETE
BARRIER RAIL SECTIONS
60' SPAN

24'-0" CLEAR ROADWAY - 60° SKEW

NORTH CAROLINA PROFESSIONAL SEAL 19661 ENGINEER L. KEVIN AUSTIN 3/3/08

PLANS PREPARED BY:
MULKEY ENGINEERS & CONSULTANTS

REVISIONS						SHEET NO.
NO.	BY:	DATE:	NO.	BY:	DATE:	14
1			3			TOTAL SHEETS
2			4			26

DRAWN BY : W. B. ALLEN DATE : 1/08
CHECKED BY : R. V. KEITH DATE : 2/08

3/3/2008 9:05:09 AM R:\Structures\B3567ED_SD_BR_9.dgn

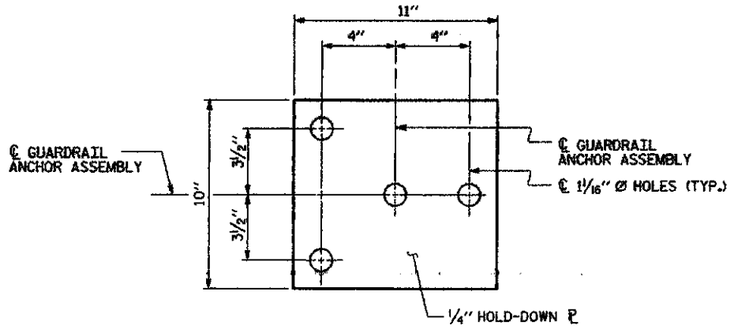

PLAN

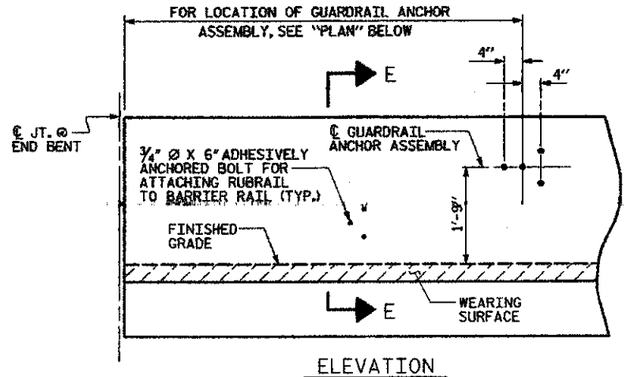

ELEVATION

FOR LOCATION OF RUBRAIL, SEE ROADWAY STD. 862.03

NOTES

THE GUARDRAIL ANCHOR ASSEMBLY SHALL CONSIST OF A 1/4" HOLD DOWN PLATE AND 4 - 7/8" Ø BOLTS WITH NUTS AND WASHERS, RUBRAIL, AND ADHESIVELY ANCHORED BOLTS.

THE HOLD-DOWN PLATE SHALL CONFORM TO AASHTO M270 GRADE 36. AFTER FABRICATION, THE HOLD-DOWN PLATE SHALL BE HOT-DIP GALVANIZED IN ACCORDANCE WITH AASHTO M111.

BOLTS SHALL CONFORM TO THE REQUIREMENTS OF ASTM A307 AND NUTS SHALL CONFORM TO THE REQUIREMENTS OF AASHTO M291. BOLTS, NUTS AND WASHERS SHALL BE GALVANIZED. (AT THE CONTRACTOR'S OPTION, STAINLESS STEEL BOLTS, NUTS AND WASHERS MAY BE USED AS AN ALTERNATE FOR THE 7/8" Ø GALVANIZED BOLTS, NUTS AND WASHERS. THEY SHALL CONFORM TO OR EXCEED THE MECHANICAL REQUIREMENTS OF ASTM A307. THE USE OF THIS ALTERNATE SHALL BE APPROVED BY THE ENGINEER.)

~~THE GUARDRAIL ANCHOR ASSEMBLY IS REQUIRED AT ALL POINTS WHERE APPROACH~~ GUARDRAIL IS TO BE ATTACHED TO THE END OF BARRIER RAIL. FOR POINTS OF ATTACHMENT, SEE SKETCH.

AFTER INSTALLATION, THE EXPOSED THREAD OF THE BOLT SHALL BE BURRED WITH A SHARP POINTED TOOL.

THE COST OF THE GUARDRAIL ANCHOR ASSEMBLY SHALL BE INCLUDED IN THE UNIT CONTRACT PRICE BID FOR CONCRETE BARRIER RAIL.

THE 1 1/4" Ø HOLES SHALL BE FORMED OR DRILLED WITH A CORE BIT. IMPACT TOOLS WILL NOT BE PERMITTED. ANY CONCRETE DAMAGED BY THIS WORK SHALL BE REPAIRED TO THE SATISFACTION OF THE ENGINEER.

THE C6 X 8.2 RUBRAIL IS TO BE ADHESIVELY ANCHORED TO THE RAIL USING THREE 3/4" Ø X 6" BOLTS WITH WASHERS. LEVEL ONE FIELD TESTING IS REQUIRED, AND THE YIELD LOAD OF THE 3/4" Ø BOLT IS 12 KIPS. FOR ADHESIVELY ANCHORED ANCHOR BOLTS OR DOWELS, SEE SPECIAL PROVISIONS. SEE ROADWAY STANDARD 862.03 FOR DETAILS AND LOCATION OF THE RUBRAIL.

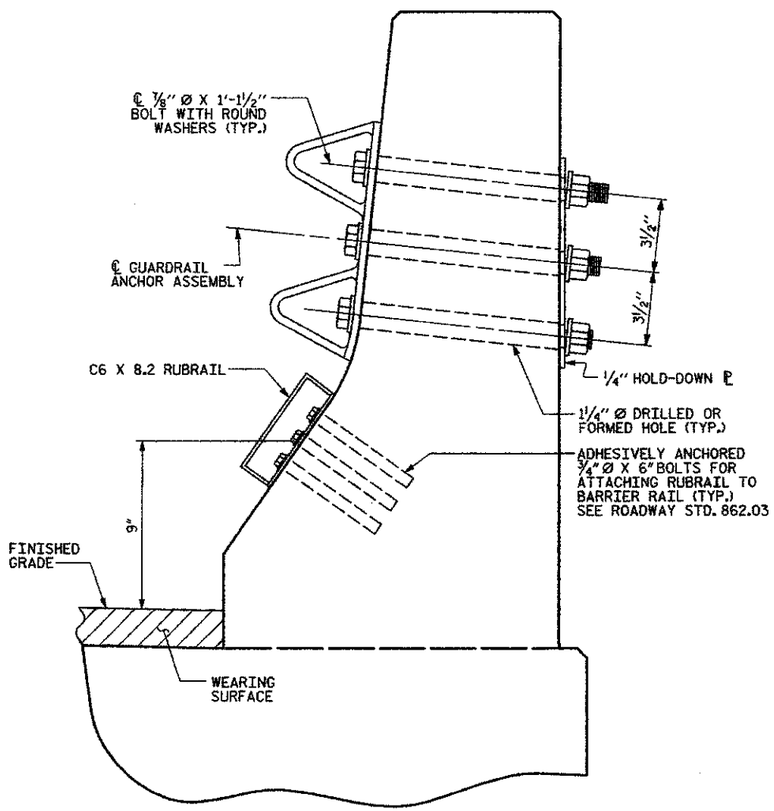

SECTION E-E

GUARDRAIL ANCHOR ASSEMBLY DETAILS

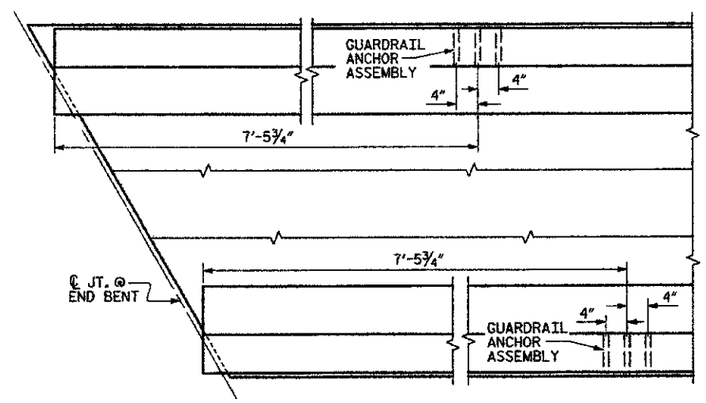

PLAN

LOCATION OF ANCHORS FOR GUARDRAIL

END BENT #1 SHOWN, END BENT #2 SIMILAR.

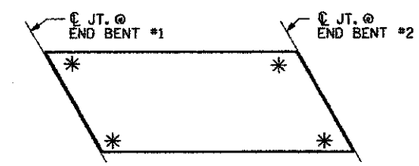

SKETCH SHOWING POINTS OF ATTACHMENTS

✳ DENOTES GUARDRAIL ANCHOR ASSEMBLY

PROJECT NO. 33203

HAYWOOD COUNTY

STATION: 13+80.00 -LREV-

THIS STANDARD DRAWING REVIEWED & ADOPTED FOR USE AT THE REFERENCED LOCATION BY THE UNDERSIGNED:

NORTH CAROLINA PROFESSIONAL SEAL 19661 ENGINEER KEVIN AUSTIN 5/3/11

PLANS PREPARED BY: MULKEY ENGINEERS & CONSULTANTS

STATE OF NORTH CAROLINA
DEPARTMENT OF TRANSPORTATION
RALEIGH
STANDARD

GUARDRAIL ANCHORAGE FOR BARRIER RAIL

STD. NO. GRA2

REVISIONS						SHEET NO.
NO.	BY:	DATE:	NO.	BY:	DATE:	15
1			3			TOTAL SHEETS
2			4			26

ASSEMBLED BY : W. B. ALLEN		DATE : 1/08	
CHECKED BY : R. V. KEITH		DATE : 2/08	
DRAWN BY : TLA 5/06	ADDED 5/1/06R KMM/GM		
CHECKED BY : GM 5/06			

3/3/2011 9:05:43 AM R:\Structures\B3857\B3_50_GRA_GuAdgn

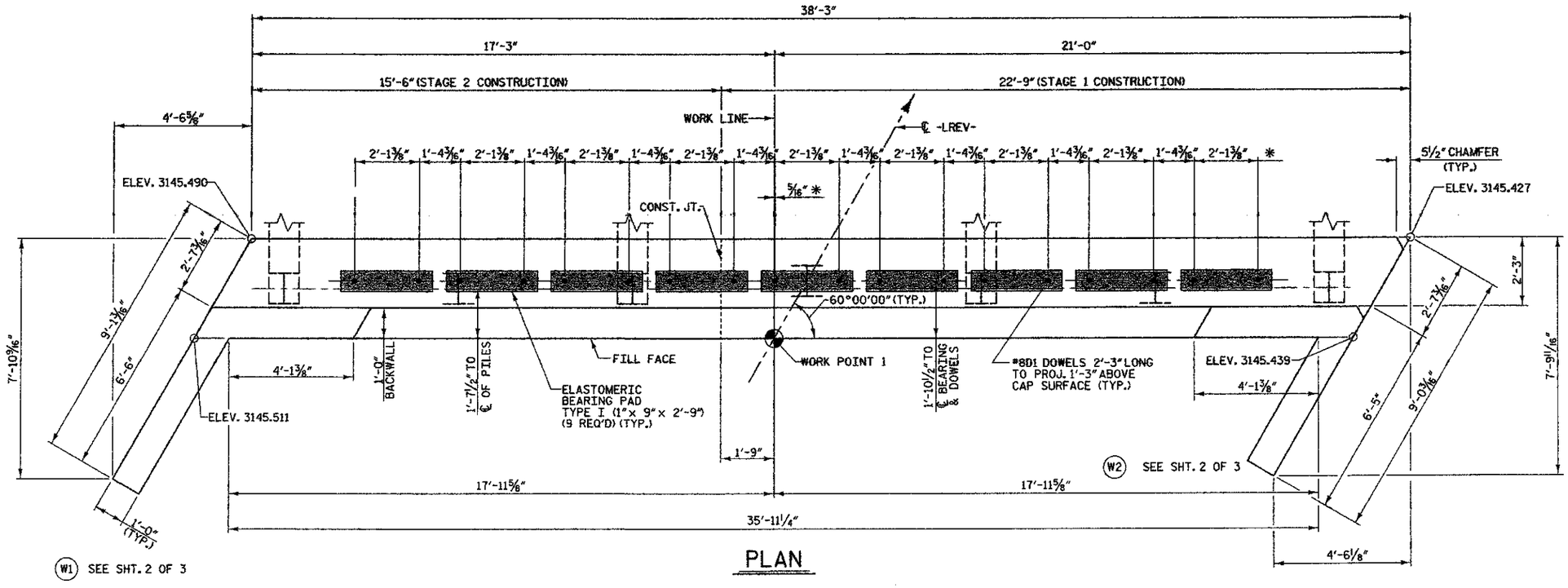

PLAN

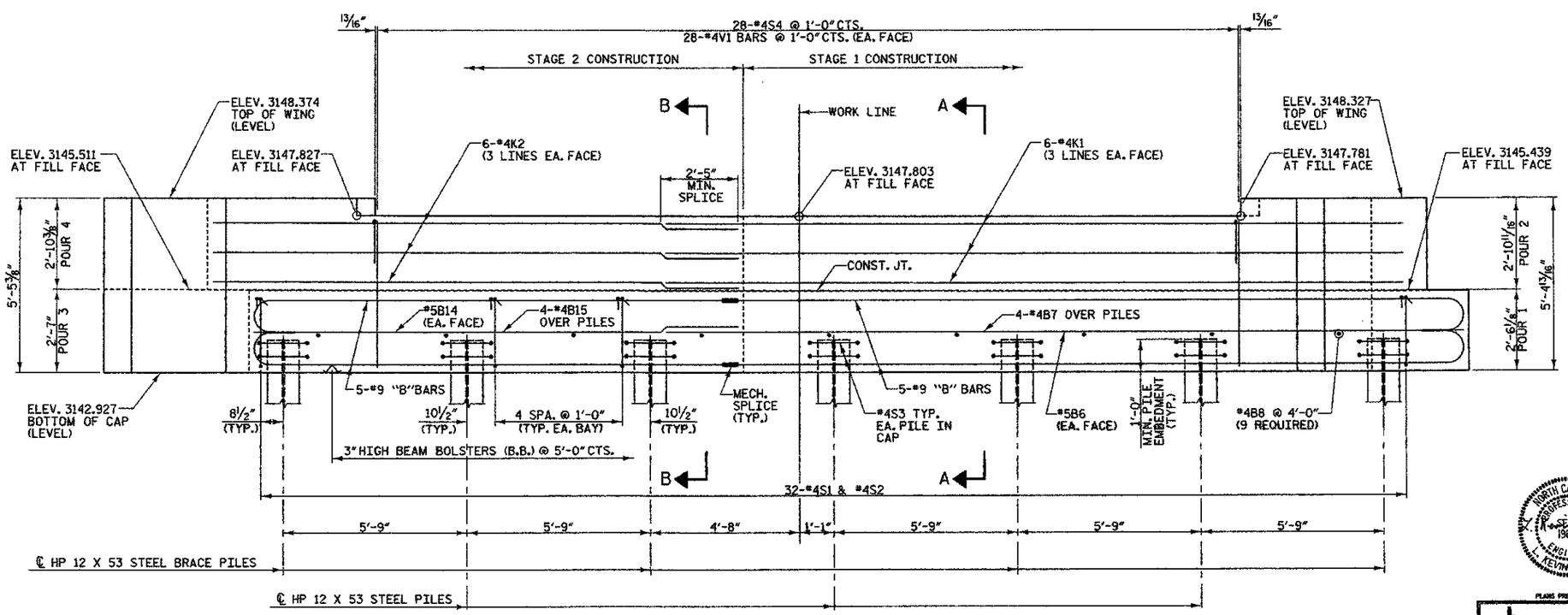

ELEVATION

NOTES:

STIRRUPS IN CAP MAY BE SHIFTED AS NECESSARY TO CLEAR *8D1 DOWELS.

* MEASURED ALONG SURFACE OF CAP SEE DOWEL DETAIL, SHEET 3 OF 3.

FOR MECHANICAL BUTT SPLICING OF REINFORCED STEEL, SEE SPECIAL PROVISIONS.

THE AREA BETWEEN THE WINGWALL AND EDGE OF PAVEMENT SHALL BE GRADED TO DRAIN AWY FROM THE FILL FACE OF THE BRIDGE AND SHALL BE PAVED.

PROJECT NO. 33203

HAYWOOD COUNTY

STATION: 13+80.00 -LREV-

REPLACES BRIDGE NO. 9 SHEET 1 OF 3

STATE OF NORTH CAROLINA
DEPARTMENT OF TRANSPORTATION
RALEIGH

SUBSTRUCTURE END BENT 1

24'-0" CLEAR ROADWAY - 60° SKEW

NORTH CAROLINA PROFESSIONAL SEAL 19661 ENGINEER R. KEVIN AUSTIN 3/3/11

PLANS PREPARED BY:
MULKEY ENGINEERS & CONSULTANTS

REVISIONS						SHEET NO.
NO.	BY:	DATE:	NO.	BY:	DATE:	16
1			3			TOTAL SHEETS
2			4			26

DRAWN BY : W. B. ALLEN DATE : 1/08
CHECKED BY : R. V. KEITH DATE : 2/08

3/3/2011 9:05:06 AM R:\Structures\B5657\BL_SU_EB_CU.dgn

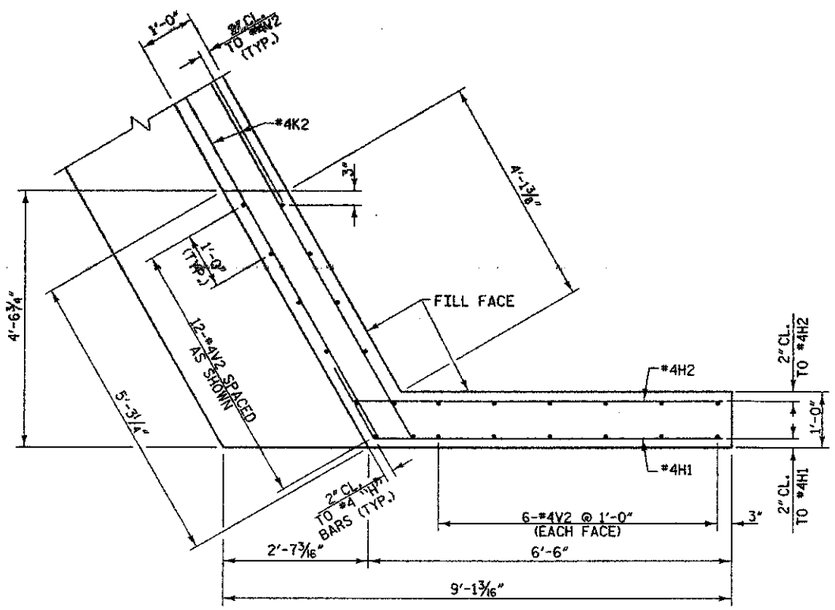

W1 PLAN OF LEFT WING

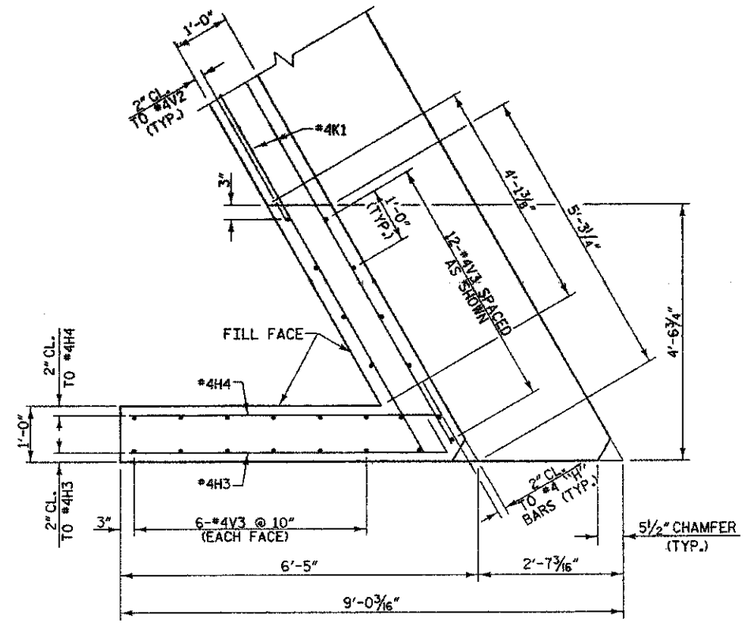

W2 PLAN OF RIGHT WING

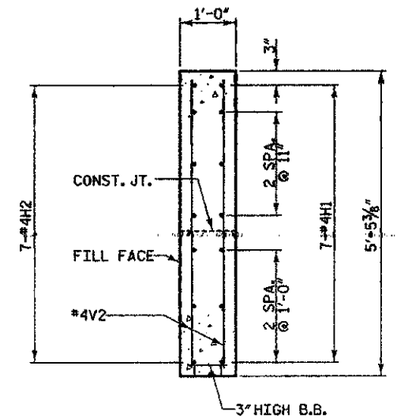

SECTION X-X

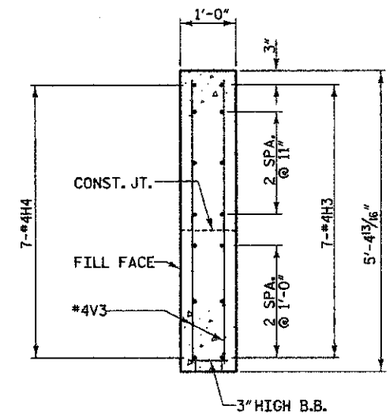

SECTION Y-Y

* MATCH "H" BARS TO "K" BARS IN BACKWALL AS SHOWN

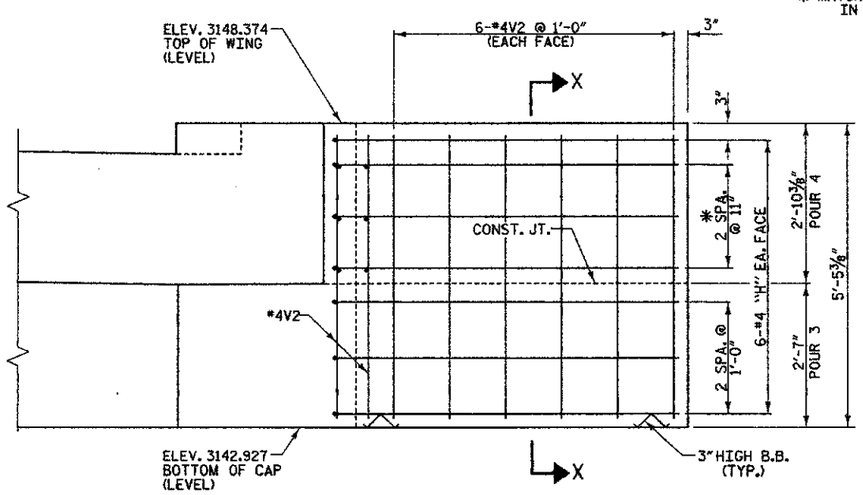

W1 ELEVATION OF LEFT WING

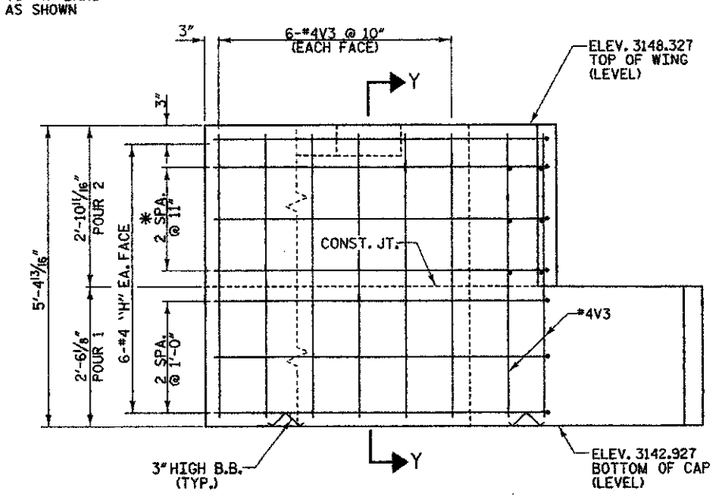

W2 ELEVATION OF RIGHT WING

PROJECT NO. 33203

HAYWOOD COUNTY

STATION: 13+80.00 -LREV-

REPLACES BRIDGE NO. 9 SHEET 2 OF 3

STATE OF NORTH CAROLINA
DEPARTMENT OF TRANSPORTATION
RALEIGH

SUBSTRUCTURE END BENT 1

24'-0" CLEAR ROADWAY - 60° SKEW

NORTH CAROLINA PROFESSIONAL SEAL 19661 ENGINEER R. KEVIN AUSTIN 3/3/11

PLANS PREPARED BY:
MULKEY ENGINEERS & CONSULTANTS

REVISIONS								SHEET NO.
NO.	BY:	DATE:	NO.	BY:	DATE:			17
1			3					TOTAL SHEETS
2			4					26

DRAWN BY : W. B. ALLEN DATE : 1/08
CHECKED BY : R. V. KEITH DATE : 2/08

3/3/2011 9:05:33 AM R:\Structures\B3633TB1_S0_BL02.dgn

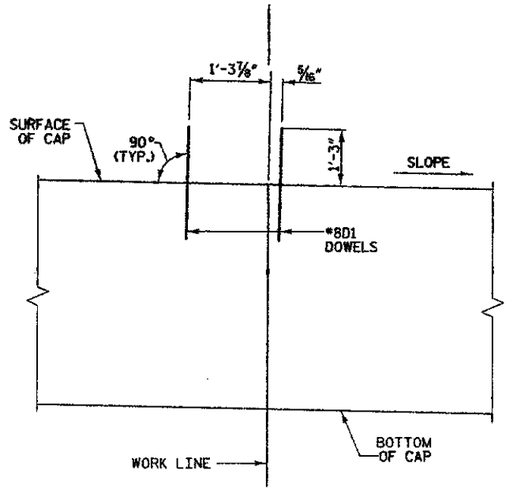

DOWEL DETAIL

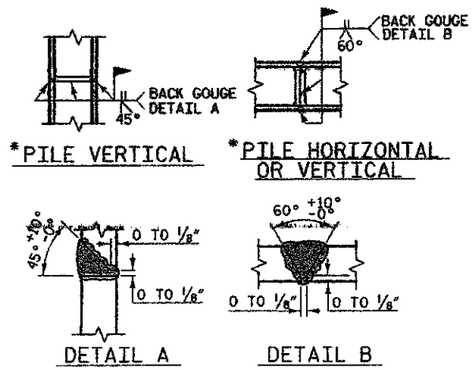

PILE SPLICE DETAILS

* POSITION OF PILE DURING WELDING.

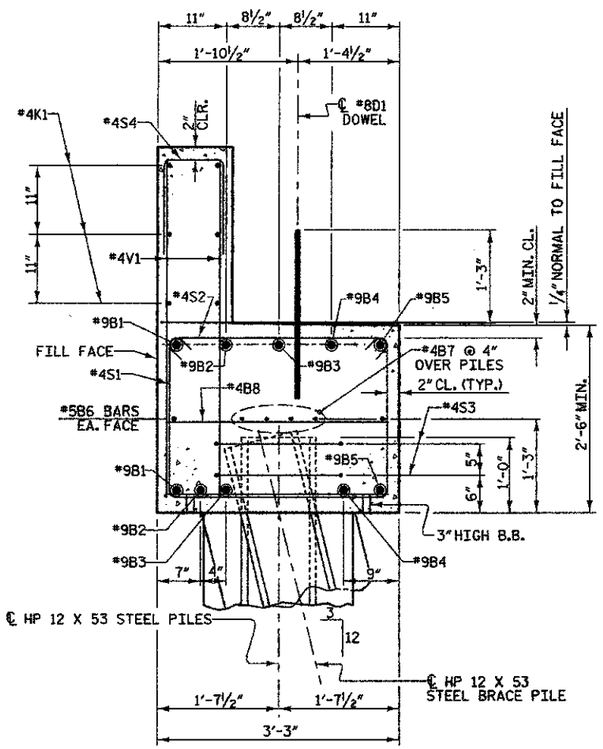

SECTION A-A

STAGE 1 CONSTRUCTION

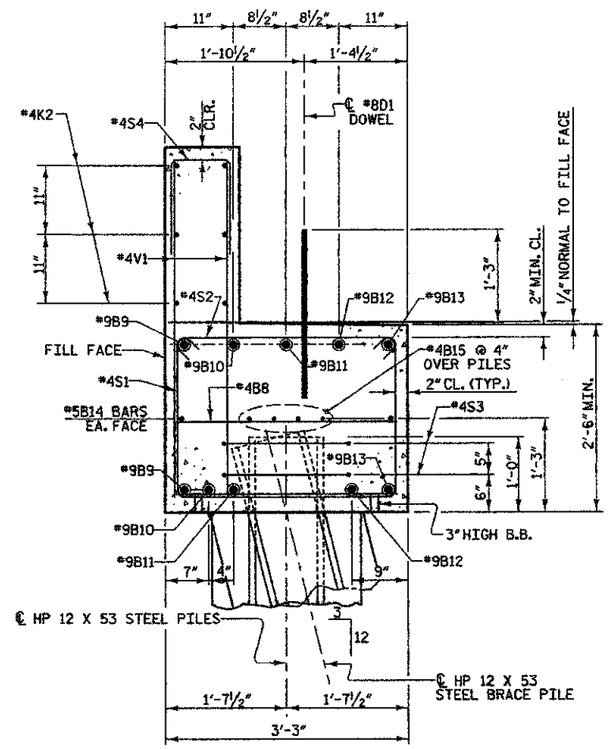

SECTION B-B

STAGE 2 CONSTRUCTION

BAR TYPES

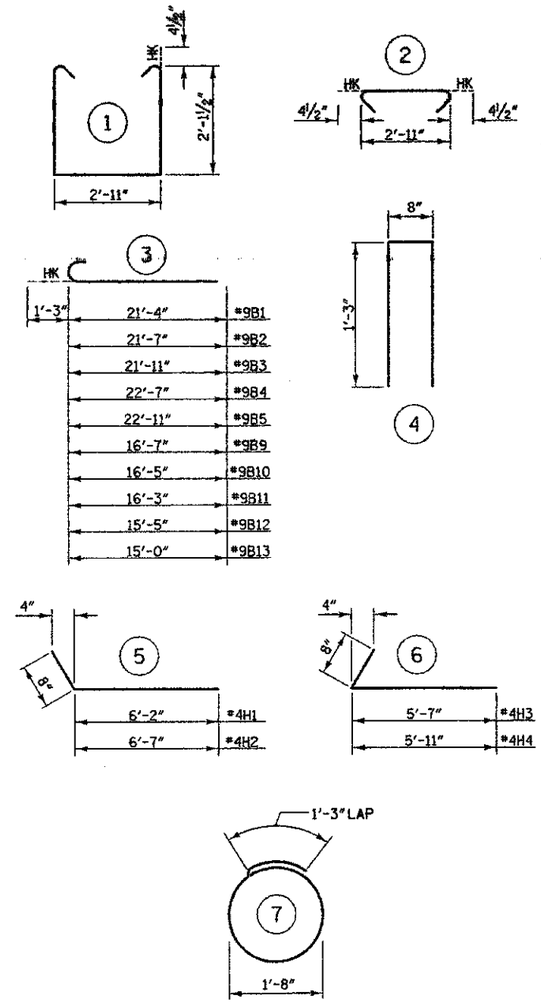

ALL BAR DIMENSIONS ARE OUT TO OUT

BILL OF MATERIAL

FOR END BENT 1

BAR	NO.	SIZE	TYPE	LENGTH	WEIGHT
B1	2	#9	3	22'-7"	154
B2	2	#9	3	22'-10"	156
B3	2	#9	3	23'-2"	158
B4	2	#9	3	23'-10"	162
B5	2	#9	3	24'-2"	164
B6	2	#5	STR	24'-9"	52
B7	4	#4	STR	24'-3"	65
B8	9	#4	STR	2'-11"	18
B9	2	#9	3	17'-10"	121
B10	2	#9	3	17'-8"	120
B11	2	#9	3	17'-6"	119
B12	2	#9	3	16'-8"	113
B13	2	#9	3	16'-3"	111
B14	2	#5	STR	15'-0"	31
B15	4	#4	STR	15'-0"	40
D1	18	#8	STR	2'-3"	108
H1	7	#4	5	6'-10"	32
H2	7	#4	5	7'-3"	34
H3	7	#4	6	6'-3"	29
H4	7	#4	6	6'-7"	31
K1	6	#4	STR	23'-9"	95
K2	6	#4	STR	16'-7"	66
S1	32	#4	1	7'-11"	169
S2	32	#4	2	3'-8"	78
S3	14	#4	7	6'-6"	61
S4	28	#4	4	3'-2"	59
V1	28	#4	STR	4'-5"	83
V2	24	#4	STR	5'-0"	80
V3	24	#4	STR	4'-11"	79

TOTAL REINFORCING STEEL = 2587 lbs.

CLASS "A" CONCRETE - CU. YARDS

POUR 1	7.1 cu. yds.
POUR 2	2.7 cu. yds.
POUR 3	5.6 cu. yds.
POUR 4	2.2 cu. yds.
TOTAL	17.6 cu. yds.

PILE EXCAVATION IN SOIL-LIN. FEET 14

PILE EXCAVATION NOT IN SOIL-LIN. FEET 161

PILE EXCAVATION BACKFILL
CLASS "A" CONCRETE - CU. YARDS 20.3

HP 12 X 53 STEEL PILES
7 PILES REQUIRED - LIN. FEET 210

PROJECT NO. 33203

HAYWOOD COUNTY

STATION: 13+80.00 -LREV-

REPLACES BRIDGE NO. 9 SHEET 3 OF 3

STATE OF NORTH CAROLINA
DEPARTMENT OF TRANSPORTATION
RALEIGH

SUBSTRUCTURE END BENT 1

24'-0" CLEAR ROADWAY - 60° SKEW

NORTH CAROLINA PROFESSIONAL SEAL ENGINEER 19661 L. KEVIN AUSTIN 3/3/10

PLANS PREPARED BY:
MULKEY ENGINEERS & CONSULTANTS
P.O. BOX 33127
RALEIGH, N.C. 27636
(919) 851-1912
FAX (919) 851-1918
WWW.MULKEYINC.COM

REVISIONS								SHEET NO.
NO.	BY:	DATE:	NO.	BY:	DATE:			18
1			3					TOTAL SHEETS
2			4					26

DRAWN BY : W. B. ALLEN DATE : 1/08
CHECKED BY : R. V. KEITH DATE : 2/08

3/3/2010 9:06:56 AM R:\Structures\33203TB9_SD_03.dgn

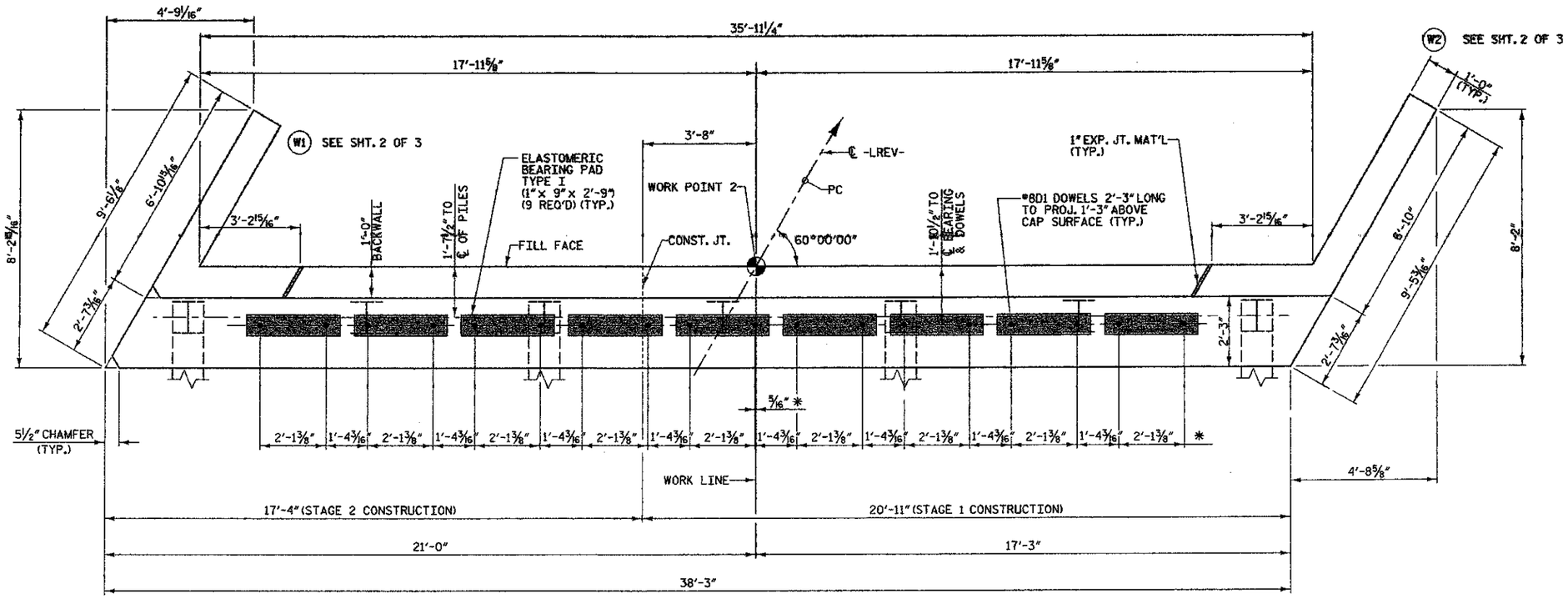

PLAN

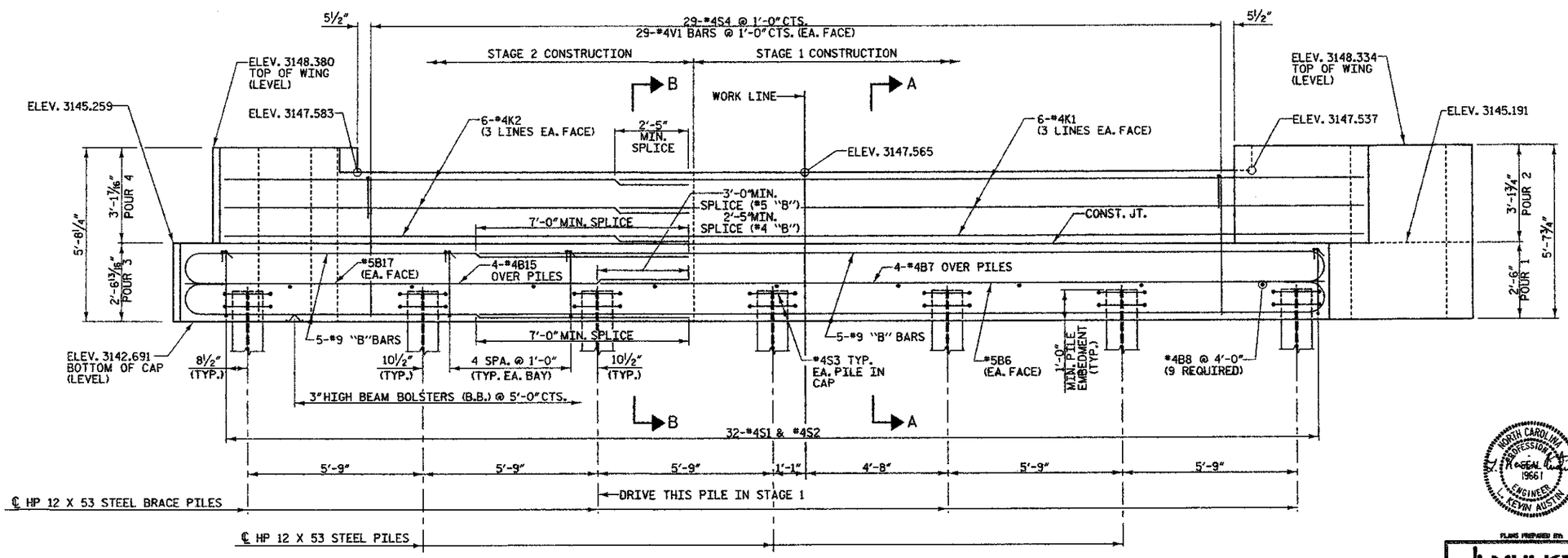

ELEVATION

NOTES:

STIRRUPS IN CAP MAY BE SHIFTED AS NECESSARY TO CLEAR *8D1 DOWELS.

* MEASURED ALONG SURFACE OF CAP SEE DOWEL DETAIL, SHEET 3 OF 3.

THE AREA BETWEEN THE WINGWALL AND EDGE OF PAVEMENT SHALL BE GRADED TO DRAIN AWY FROM THE FILL FACE OF THE BRIDGE AND SHALL BE PAVED.

PILE #3 TO BE DRIVEN IN STAGE 1.

PROJECT NO. 33203

HAYWOOD COUNTY

STATION: 13+80.00 -LREV-

REPLACES BRIDGE NO. 9 SHEET 1 OF 3

STATE OF NORTH CAROLINA
DEPARTMENT OF TRANSPORTATION
RALEIGH

SUBSTRUCTURE END BENT 2

24'-0" CLEAR ROADWAY - 60° SKEW

NORTH CAROLINA PROFESSIONAL SEAL 19661 ENGINEER L. KEVIN AUSTIN 3/3/11

PLANS PREPARED BY: MULKEY ENGINEERS & CONSULTANTS

REVISIONS								SHEET NO.
NO.	BY:	DATE:	NO.	BY:	DATE:			19
1			3					TOTAL SHEETS
2			4					26

DRAWN BY : W. B. ALLEN DATE : 1/08
CHECKED BY : R. V. KEITH DATE : 2/08

3/3/2008 9:07:20 AM R:\Structures\B3667\9_SD_E2_04.dgn

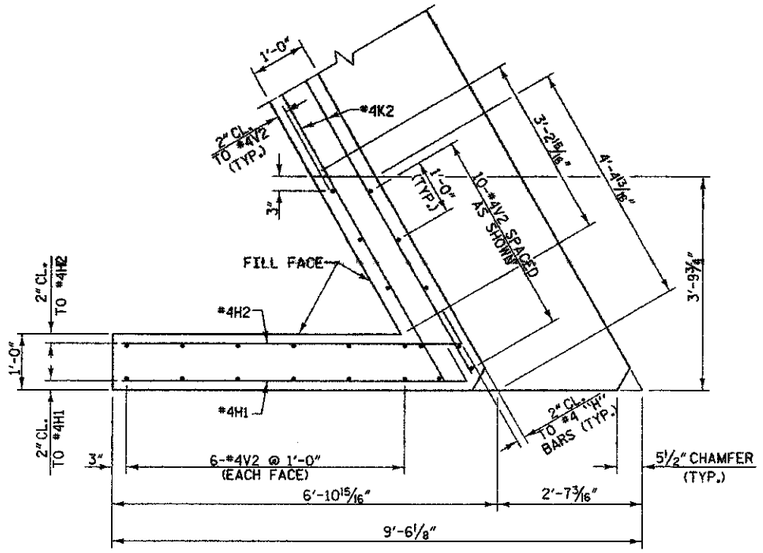

W1 PLAN OF LEFT WING

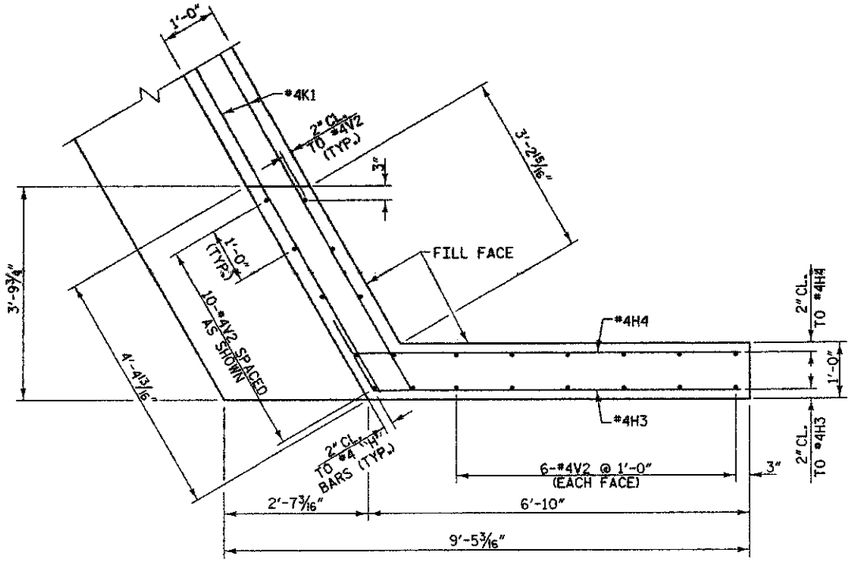

W2 PLAN OF RIGHT WING

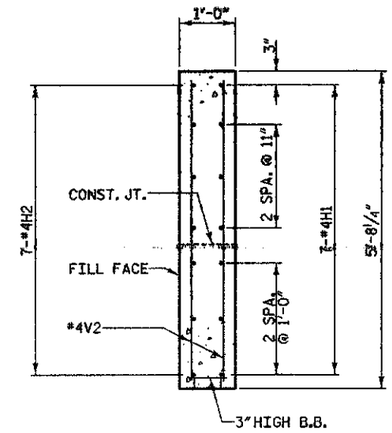

SECTION X-X

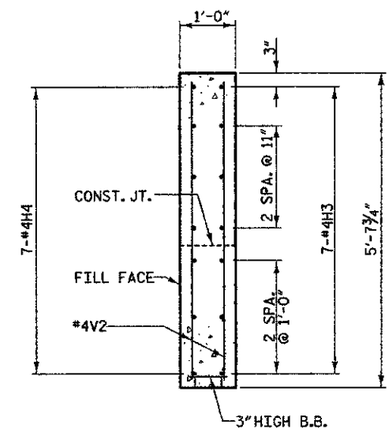

SECTION Y-Y

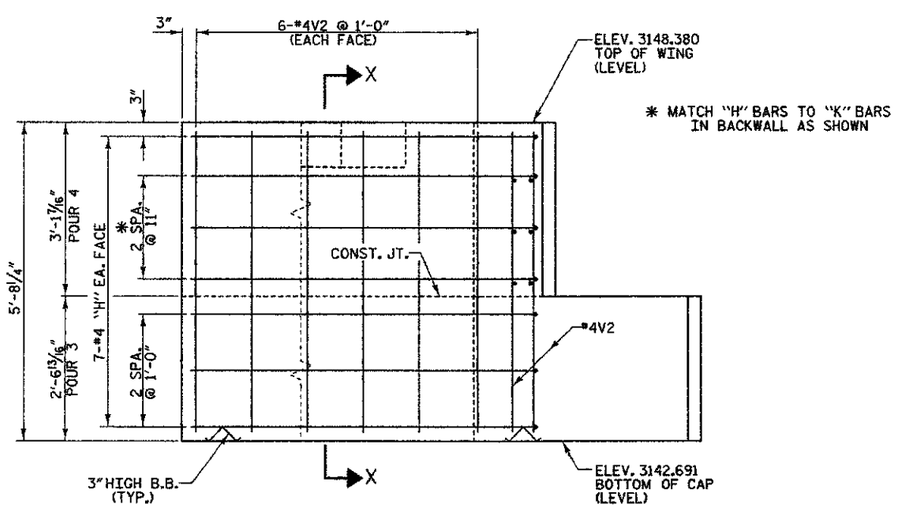

W1 ELEVATION OF LEFT WING

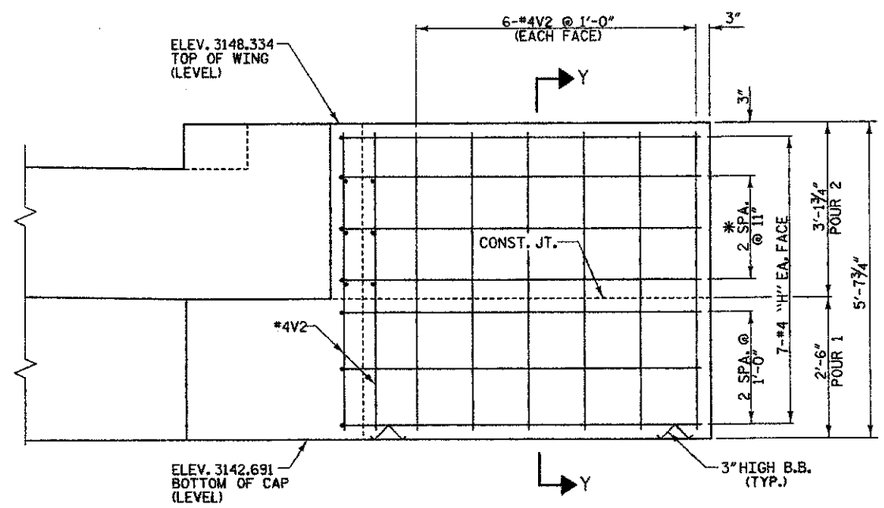

W2 ELEVATION OF RIGHT WING

PROJECT NO. 33203

HAYWOOD COUNTY

STATION: 13+80.00 -LREV-

REPLACES BRIDGE NO. 9 SHEET 2 OF 3

STATE OF NORTH CAROLINA
DEPARTMENT OF TRANSPORTATION
RALEIGH

SUBSTRUCTURE END BENT 2

24'-0" CLEAR ROADWAY - 60° SKEW

NORTH CAROLINA PROFESSIONAL SEAL 19661 ENGINEER L. KEVIN AUSTIN 3/3/11

PLANS PREPARED BY:
MULKEY ENGINEERS & CONSULTANTS
PO Box 33127 RALEIGH, N.C. 27636
(919) 851-1912 FAX (919) 851-1918
WWW.MULKEYINC.COM

REVISIONS						SHEET NO.
NO.	BY:	DATE:	NO.	BY:	DATE:	20
1			3			TOTAL SHEETS
2			4			26

DRAWN BY : W. B. ALLEN DATE : 1/08
CHECKED BY : R. V. KEITH DATE : 2/08

3/3/2011 9:07:43 AM R:\Structures\B3657(R)_SD_E2_02.dgn

BAR TYPES

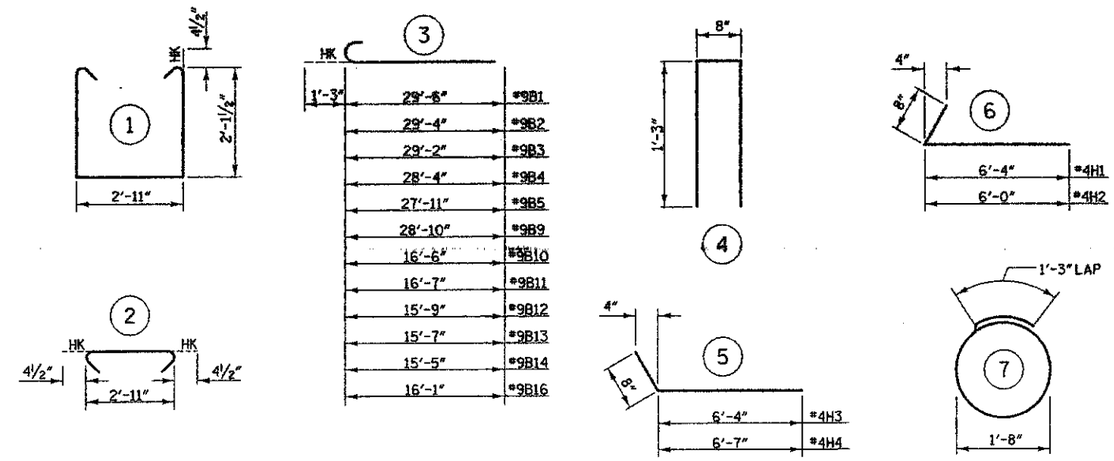

ALL BAR DIMENSIONS ARE OUT TO OUT

BILL OF MATERIAL
FOR END BENT 2

BAR	NO.	SIZE	TYPE	LENGTH	WEIGHT
B1	2	*9	3	30'-9"	209
B2	1	*9	3	30'-7"	104
B3	2	*9	3	30'-5"	207
B4	2	*9	3	29'-7"	201
B5	2	*9	3	29'-2"	198
B6	2	*5	STR	25'-8"	54
B7	4	*4	STR	24'-3"	65
B8	9	*4	STR	2'-11"	18
B9	1	*9	3	30'-1"	102
B10	2	*9	3	17'-9"	121
B11	2	*9	3	17'-10"	121
B12	2	*9	3	17'-0"	116
B13	1	*9	3	16'-10"	57
B14	2	*9	3	16'-8"	113
B15	4	*4	STR	16'-5"	44
B16	1	*9	3	17'-4"	59
B17	2	*5	STR	15'-3"	32
D1	18	*8	STR	2'-3"	108
H1	7	*4	6	7'-0"	33
H2	7	*4	6	6'-8"	31
H3	7	*4	5	7'-0"	33
K1	6	*4	STR	25'-1"	101
K2	6	*4	STR	15'-3"	61
S1	32	*4	1	7'-11"	169
S2	32	*4	2	3'-8"	78
S3	14	*4	7	6'-6"	61
S4	29	*4	4	3'-2"	61
V1	29	*4	STR	4'-6"	87
V2	44	*4	STR	5'-2"	152

TOTAL REINFORCING STEEL = 2830 lbs.

CLASS "A" CONCRETE - CU. YARDS
- POUR 1 — 7.2 cu. yds.
- POUR 2 — 2.8 cu. yds.
- POUR 3 — 5.6 cu. yds.
- POUR 4 — 2.1 cu. yds.
- TOTAL — 17.7 cu. yds.

PILE EXCAVATION IN SOIL-LIN. FEET — 77

PILE EXCAVATION NOT IN SOIL-LIN. FEET — 168

PILE EXCAVATION BACKFILL
CLASS "A" CONCRETE - CU. YARDS — 25.0

HP 12 X 53 STEEL PILES
7 PILES REQUIRED - LIN. FEET — 245

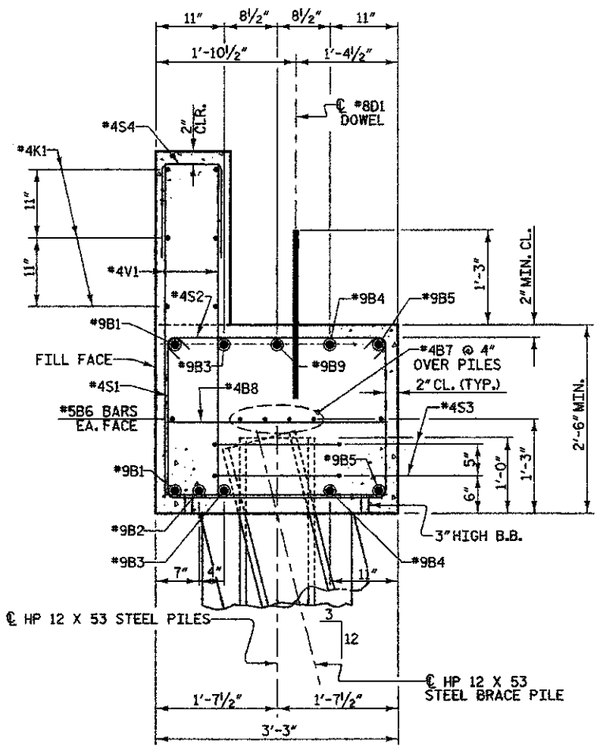

SECTION A-A
STAGE 1 CONSTRUCTION

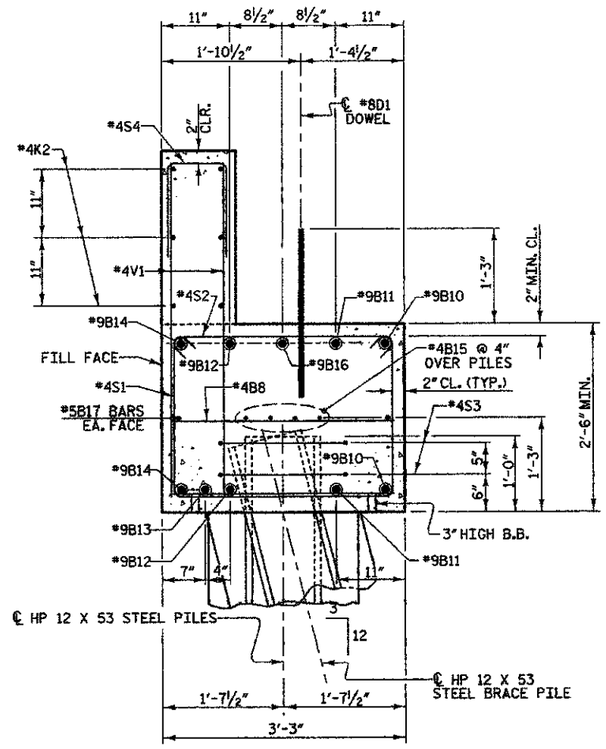

SECTION B-B
STAGE 2 CONSTRUCTION

PROJECT NO. 33203
HAYWOOD COUNTY
STATION: 13+80.00 -LREV-

REPLACES BRIDGE NO. 9 — SHEET 3 OF 3

STATE OF NORTH CAROLINA
DEPARTMENT OF TRANSPORTATION
RALEIGH

SUBSTRUCTURE END BENT 2

24'-0" CLEAR ROADWAY - 60° SKEW

NORTH CAROLINA PROFESSIONAL SEAL ENGINEER 19661 L. KEVIN AUSTIN 3/3/10

PLANS PREPARED BY:
MULKEY ENGINEERS & CONSULTANTS

REVISIONS								SHEET NO.
NO.	BY:	DATE:	NO.	BY:	DATE:			21
1			3					TOTAL SHEETS
2			4					26

DRAWN BY : W. B. ALLEN DATE : 1/08
CHECKED BY : R. V. KEITH DATE : 2/08

3/3/2010 9:06:05 AM R:\Structures\33203\B9_SD_E2_03.dgn

EROSION CONTROL PLAN

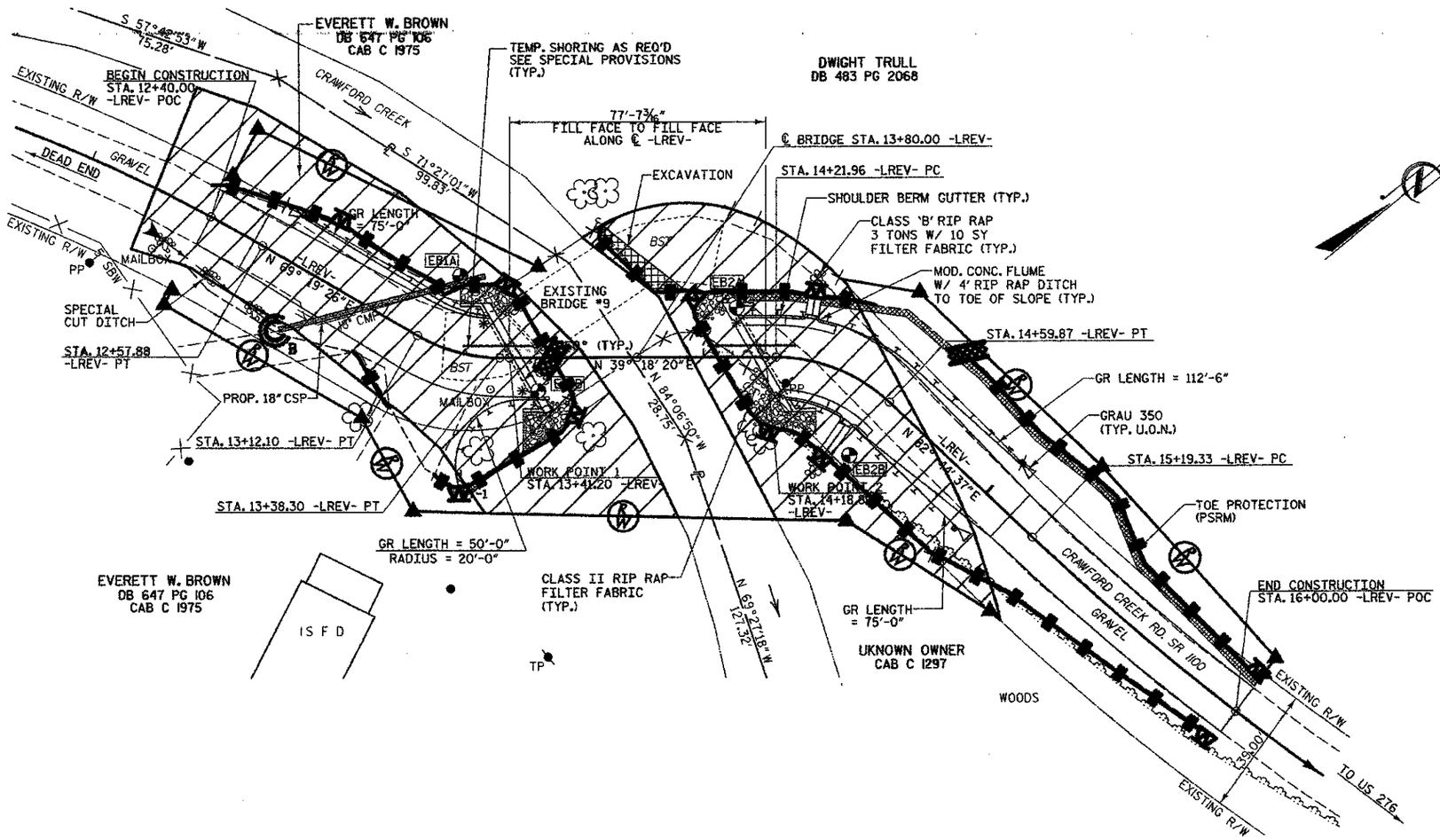

ROADSIDE ENVIRONMENTAL UNIT
DEPARTMENT OF TRANSPORTATION
DIVISION OF HIGHWAYS
RALEIGH, N.C.

2006 STANDARD SPECIFICATIONS

NOTES: ANY DEVIATION FROM OPTIONS GIVEN WILL REQUIRE PRIOR APPROVAL BY ENGINEER.

ADDITIONAL EROSION CONTROL DEVICES MAY NEED TO BE INSTALLED AS DIRECTED BY THE ENGINEER.

ENVIRONMENTALLY SENSITIVE AREA
PLEASE SEE NOTE

PROJECT NO. 33203
HAYWOOD COUNTY
STATION: 13+80.00 -LREV-

REPLACES BRIDGE NO. 9

Std. #	Description	Symbol
1605.01	Temporary Silt Fence	
1606.01	Special Sediment Control Fence	
1633.01	Temporary Rock Silt Check Type-A	
	Temporary Rock Silt Check Type-B	
1635.02	Rock Pipe Inlet Sediment Trap Type-B	

STATE OF NORTH CAROLINA
DEPARTMENT OF TRANSPORTATION
RALEIGH

BRIDGE ON SR 1100
OVER CRAWFORD CREEK
BETWEEN DEAD END AND
US 276
24'-0" CLEAR ROADWAY - 60° SKEW

REVISIONS						SHEET NO.
NO.	BY:	DATE:	NO.	BY:	DATE:	22
1			3			TOTAL SHEETS
2			4			26

EROSION CONTROL PLAN

STATE OF NORTH CAROLINA
DEPT. OF TRANSPORTATION
DIVISION OF HIGHWAYS
RALEIGH, N.C.

ENGLISH STANDARD DRAWING FOR
TEMPORARY SILT FENCE

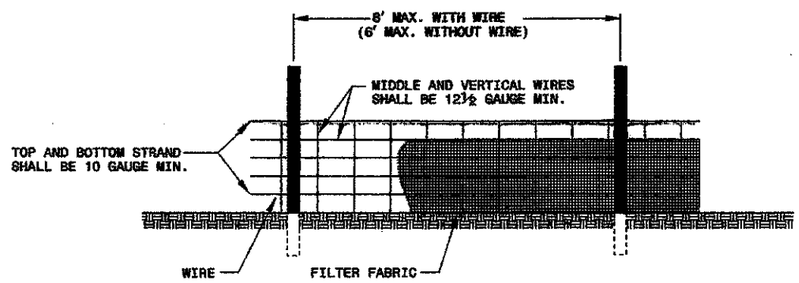

NOTES
USE WIRE A MINIMUM OF 32" IN WIDTH AND WITH A MINIMUM OF 6 LINE WIRES WITH 12" STAY SPACING.
USE FILTER FABRIC A MINIMUM OF 36" IN WIDTH AND FASTEN ADEQUATELY TO THE WIRE AS DIRECTED BY THE ENGINEER.
PROVIDE 5'-0" STEEL POST OF THE SELF-FASTENER ANGLE STEEL TYPE.

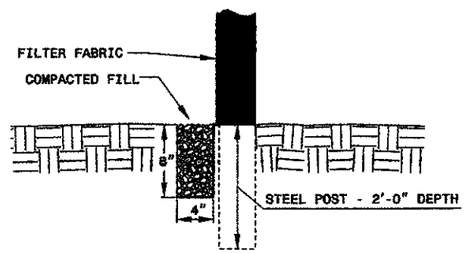

EXTENSION OF FABRIC AND WIRE INTO TRENCH

STATE OF NORTH CAROLINA
DEPT. OF TRANSPORTATION
DIVISION OF HIGHWAYS
RALEIGH, N.C.

ENGLISH STANDARD DRAWING FOR
TEMPORARY SILT FENCE

SHEET 1 OF 1
1605.01

STATE OF NORTH CAROLINA
DEPT. OF TRANSPORTATION
DIVISION OF HIGHWAYS
RALEIGH, N.C.

ENGLISH STANDARD DRAWING FOR
TEMPORARY ROCK SILT CHECK TYPE 'A'

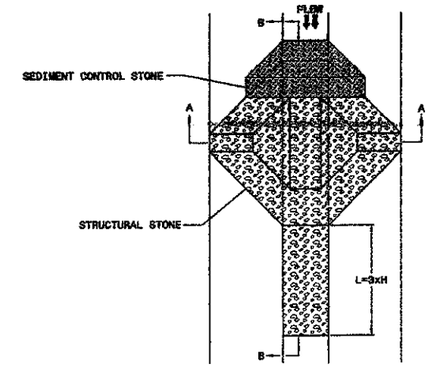

PLAN

NOTE
USE CLASS 'B' EROSION CONTROL STONE FOR STRUCTURAL STONE.
USE NO. 5 OR NO. 57 STONE FOR SEDIMENT CONTROL STONE.

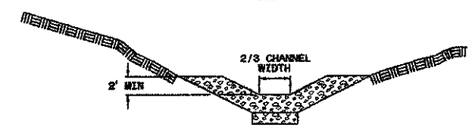

SECTION A-A

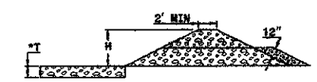

SECTION B-B
*T = 12" MIN., 18" MAX.

STATE OF NORTH CAROLINA
DEPT. OF TRANSPORTATION
DIVISION OF HIGHWAYS
RALEIGH, N.C.

ENGLISH STANDARD DRAWING FOR
TEMPORARY ROCK SILT CHECK TYPE 'A'

SHEET 1 OF 1
1633.01

STATE OF NORTH CAROLINA
DEPT. OF TRANSPORTATION
DIVISION OF HIGHWAYS
RALEIGH, N.C.

ENGLISH STANDARD DRAWING FOR
SPECIAL SEDIMENT CONTROL FENCE

GENERAL NOTES:

USE NO. 5 OR NO. 57 STONE FOR SEDIMENT CONTROL STONE.

USE HARDWARE CLOTH 24 GAUGE WIRE MESH WITH 1/4 INCH MESH OPENINGS.

INSTALL 5 FT. SELF FASTENER ANGLE STEEL POST 2 FT. DEEP MINIMUM.

SPACE POST A MAXIMUM OF 3 FT.

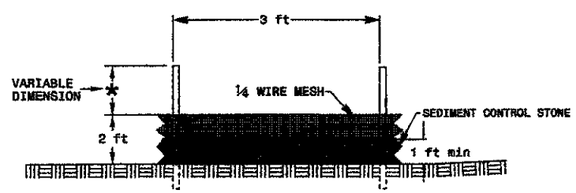

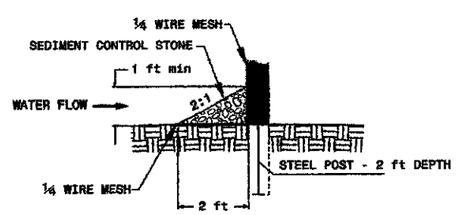

STATE OF NORTH CAROLINA
DEPT. OF TRANSPORTATION
DIVISION OF HIGHWAYS
RALEIGH, N.C.

ENGLISH STANDARD DRAWING FOR
SPECIAL SEDIMENT CONTROL FENCE

SHEET 1 OF 1
1606.01

ROADSIDE ENVIRONMENTAL UNIT
DEPARTMENT OF TRANSPORTATION
DIVISION OF HIGHWAYS
RALEIGH, N.C.

2006 STANDARD SPECIFICATIONS

NOTES: ANY DEVIATION FROM OPTIONS GIVEN WILL REQUIRE PRIOR APPROVAL BY ENGINEER.

ADDITIONAL EROSION CONTROL DEVICES MAY NEED TO BE INSTALLED AS DIRECTED BY THE ENGINEER.

PROJECT NO. 33203
HAYWOOD COUNTY
STATION: 13+80.00 -LREV-

REPLACES BRIDGE NO. 9

STATE OF NORTH CAROLINA
DEPARTMENT OF TRANSPORTATION
RALEIGH

BRIDGE ON SR 1100
OVER CRAWFORD CREEK
BETWEEN DEAD END AND
US 276
24'-0" CLEAR ROADWAY - 60° SKEW

REVISIONS						SHEET NO.
NO.	BY:	DATE:	NO.	BY:	DATE:	23
1			3			TOTAL SHEETS
2			4			26

EROSION CONTROL PLAN

STATE OF NORTH CAROLINA
DEPT. OF TRANSPORTATION
DIVISION OF HIGHWAYS
RALEIGH, N.C.

7-06

ENGLISH STANDARD DRAWING FOR

ROCK PIPE INLET SEDIMENT TRAP TYPE 'B'

SHEET 1 OF 1
1635.02

NOTE:
USE CLASS 'A' EROSION CONTROL STON FOR STRUCTURAL STONE.
USE NO. 5 OR NO. 57 STONE FOR SEDIMENT CONTROL.
CONSTRUCT TOP OF BERM A MINIMUM OF ONE FOOT BELOW THE SHOULDER OR DIVERSION POINT.
PROVIDE A TOTAL SEDIMENT TRAP VOLUME OF 1800± CUBIC FEET PER ACRE OF DISTURBED AREA. SOME OF THE REQUIRED VOLUME MAY BE PROVIDED BY OTHER UP OR DOWNSTREAM CONTROLS.

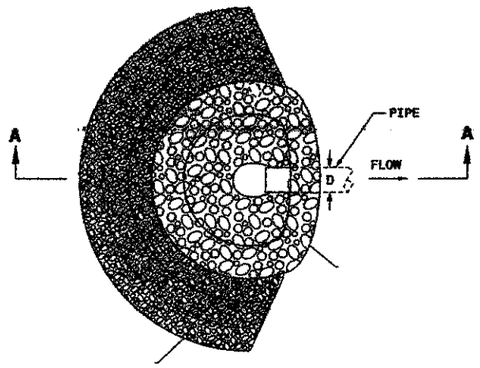

PLAN

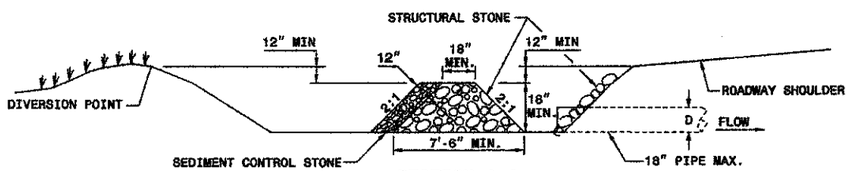

SECTION A-A

STATE OF NORTH CAROLINA
DEPT. OF TRANSPORTATION
DIVISION OF HIGHWAYS
RALEIGH, N.C.

7-06

ENGLISH STANDARD DRAWING FOR

ROCK PIPE INLET SEDIMENT TRAP TYPE 'B'

SHEET 1 OF 1
1635.02

TEMPORARY ROCK SILT CHECK TYPE 'B' DETAIL

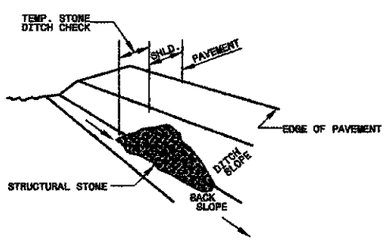

ISOMETRIC VIEW

NOTES:

USE CLASS 'B' EROSION CONTROL STONE FOR STRUCTURAL STONE.

THE ENGINEER MAY DIRECT THE OPTION OF CLASS "A" STONE FOR SITES HAVING LESS THAN ONE (1) ACRE DRAINAGE AREA AND A DITCH GRADE LESS THAN 3%.

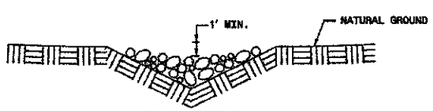

CROSS SECTION
VEE DITCH

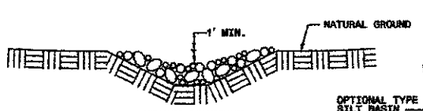

CROSS SECTION
TRAPEZOIDAL DITCH

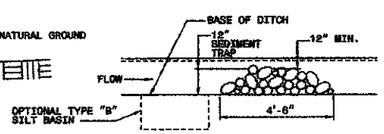

ELEVATION VIEW

ROADSIDE ENVIRONMENTAL UNIT
DEPARTMENT OF TRANSPORTATION
DIVISION OF HIGHWAYS
RALEIGH, N.C.

2006 STANDARD SPECIFICATIONS

NOTES: ANY DEVIATION FROM OPTIONS GIVEN WILL REQUIRE PRIOR APPROVAL BY ENGINEER.

ADDITIONAL EROSION CONTROL DEVICES MAY NEED TO BE INSTALLED AS DIRECTED BY THE ENGINEER.

PROJECT NO. 33203
HAYWOOD COUNTY
STATION: 13+80.00 -LREV-

REPLACES BRIDGE NO. 9

STATE OF NORTH CAROLINA
DEPARTMENT OF TRANSPORTATION
RALEIGH

BRIDGE ON SR 1100
OVER CRAWFORD CREEK
BETWEEN DEAD END AND
US 276
24'-0" CLEAR ROADWAY - 60° SKEW

REVISIONS						SHEET NO.
NO.	BY:	DATE:	NO.	BY:	DATE:	24
1			3			TOTAL SHEETS
2			4			26

EROSION CONTROL PLAN

Reforestation:

Reforestation will be planted within interchanges and along the outside borders of the road, and in other areas as directed. Reforestation is not shown on the plan sheets. See the Reforestation Detail Sheet.

All non-maintained riparian buffers impacted by the placement of temporary fill or clearing activities shall be restored to the preconstruction contours and revegetated with native woody species.

The entire Reforestation operation shall comply with the requirements of Section 1670 of the Standard Specifications.

Reforestation shall be bare root seedlings 12"-18" tall.

Reforestation shall be shall be planted as soon as practical following permanent Seeding and Mulching. The seedlings shall be planted in a 16-foot wide swath adjacent to mowing pattern line, or as directed.

Root dip: The roots of reforestation seedlings shall be coated with a slurry of water, and either a fine clay (kaolin) or a superabsorbent that is designated as a bare root dip. The type, mixture ratio, method of application, and the time of application shall be submitted to the Engineer for approval.

With the approval of the Engineer, seedlings may be coated before delivery to the job or at the time of planting, but at no time shall the roots of the seedlings be allowed to dry out. The roots shall be moistened immediately prior to planting.

Seasonal Limitations: Reforestation shall be planted from November 15 through March 15.

Payment for Reforestation will be included in the contract bid price for Lump Sum for Erosion Control.

Special Sediment Control Fence:

Description:

The work covered by this section consists of the construction, maintenance, and removal of special sediment control fence. Place special sediment control fence as shown on the plans or as directed by the Engineer.

Materials:

(A) Posts:

Steel posts shall be at least 5 feet in length, approximately 1 3/8 inches wide measured parallel to the fence, and have a minimum weight of 1.25 lb/ft of length. The post shall be equipped with an anchor plate having a minimum area of 14.0 square inches, and shall have a means of retaining wire in the desired position without displacement.

(B) 1/4 inch Hardware Cloth:

Hardware cloth shall have 1/4 inch openings constructed from #24 gauge wire. Install hardware cloth according to the detail shown on the plans.

(C) Sediment Control Stone:

Sediment control stone shall meet the requirements of Section 1005. Install stone according to the detail shown on the plans.

Maintenance and Removal:

The Contractor shall maintain the special sediment control fence until the project is accepted or until the fence is removed, and shall remove and dispose of silt accumulations at the fence when so directed by the Engineer in accordance with Section 1630.

The quantity of posts, sediment control stone and hardware cloth as measured above will be paid for at the contract price for "Lump Sum for Erosion Control". Such price and payment will be full compensation for all work covered by this provision, including but not limited to, furnishing all materials, installation, and removal and disposal of silt accumulations and materials.

Environmentally Sensitive Areas:

This project is located in an "Environmentally Sensitive Area." This designation requires special procedures to be used for clearing and grubbing, temporary stream crossings, and grading operations within the area identified on the plans. This also requires special procedures to be used for seeding and mulching and staged seeding within the project.

Clearing and Grubbing:

In areas identified on the erosion control plans as "Environmentally Sensitive Areas", the Contractor may perform clearing operations, but not grubbing operations until immediately prior to beginning grading operations as described in Section 200, Article 200-1, in the Standard Specifications. The "Environmentally Sensitive Area" shall be defined as a 50 foot buffer zone on both sides of the stream (or depression), measured from top of streambank, (or center of depression). Only clearing operations (not grubbing) shall be allowed in this buffer zone until immediately prior to beginning grading operations. Erosion control devices shall be installed immediately following the clearing operation.

Grading:

Once grading operations begin in identified "Environmentally Sensitive Areas", work will progress in a continuous manner until complete. All construction within these areas must progress in a continuous manner such that each phase is complete and areas permanently stabilized prior to beginning of next phase. Failure on the part of the Contractor to complete any phase of construction in a continuous manner in "Environmentally Sensitive Areas" as specified will be just cause for the Engineer to direct the suspension of work in accordance with Section 108-7 of the Standard Specifications.

Temporary Stream Crossings:

Any crossing of streams within the limits of this project must be accomplished in accordance with Section 107-13(b) of the Standard Specifications.

Seeding and Mulching:

Seeding and mulching shall be performed in accordance with Section 1660 of the Standard Specifications and vegetative cover sufficient to restrain erosion shall be installed immediately following grade establishment.

Seeding and mulching shall be performed on the areas disturbed by construction immediately following final grade establishment. No appreciable time shall lapse into the contract time without stabilization of slopes, ditches and other areas within the "Environmentally Sensitive Areas" as indicated on the erosion control plans.

Stage Seeding:

The work covered by this section shall consist of the establishment of a vegetative cover on cut and fill slopes as grading progresses. Seeding and mulching shall be done in stages on cut and fill slopes which are greater than 20 feet in height measured along the slope, or greater than 2 acres in area. Each stage shall not exceed the limits stated above.

All work described above will be paid for at the contract price for "Lump Sum for Erosion Control" established in the contract for the work involved. Additional payments will not be made for the requirements of this section as the cost for this work should be included in the contract price for "Lump Sum for Erosion Control" for the work involved.

SAFETY FENCE:

Description

Safety Fence shall consist of furnishing, installing and maintaining polyethylene or polypropylene fence along the outside riparian buffer, wetland, or water boundary located within the construction corridor to mark the areas that have been approved to infringe within the buffer, wetland or water. The fence shall be installed prior to any land disturbing activities.

Materials

Polyethylene or polypropylene fence shall be a highly visible preconstructed safety fence approved by the Engineer. The fence material shall have an ultraviolet coating.

Either wood posts or steel posts may be used. Wood posts shall be hardwood with a wedge or pencil tip at one end, and shall be at least 5 ft. in length with a minimum nominal 2" x 2" cross section. Steel posts shall be at least 5 ft. in length, and have a minimum weight of 0.85 lb./ft. of length.

Construction Methods

No additional clearing and grubbing is anticipated for the installation of this fence; however, if any clearing and grubbing is required, it will be the minimum required for the installation of the safety fence. Such clearing shall include satisfactory removal and disposal of all trees, brush, stumps and other objectionable material.

The fence shall be erected to conform to the general contour of the ground. When determined necessary, minor grading along the fence line shall be performed to meet this requirement provided no obstructions to proper drainage are created.

Posts shall be set and maintained in a vertical position and may be hand set or set with a post driver. If hand set, all backfill material shall be thoroughly tamped. Wood posts may be sharpened to a dull point if power driven. Posts damaged by power driving shall be removed and replaced prior to final acceptance. The tops of all wood posts shall be cut at a 30-degree angle. The wood posts may, at the option of the Contractor, be cut at this angle either before or after the posts are erected.

The fence fabric shall be attached to the wood posts with one 2" galvanized wire staple across each cable or to the steel posts with wire or other acceptable means.

The Contractor shall be required to maintain the safety fence in a satisfactory condition for the duration of the project as determined by the Engineer.

Measurement and Payment

Safety Fence will be paid for at the contract price for "Lump Sum for Erosion Control". Such payment will be full compensation including but not limited to clearing and grading, furnishing and installing fence fabric with necessary posts and post bracing, staples, tie wires, tools, equipment and incidentals necessary to complete this work.

ROADSIDE ENVIRONMENTAL UNIT
DEPARTMENT OF TRANSPORTATION
DIVISION OF HIGHWAYS
RALEIGH, N.C.

2006 STANDARD SPECIFICATIONS

NOTES: ANY DEVIATION FROM OPTIONS GIVEN WILL REQUIRE PRIOR APPROVAL BY ENGINEER.

ADDITIONAL EROSION CONTROL DEVICES MAY NEED TO BE INSTALLED AS DIRECTED BY THE ENGINEER.

PROJECT NO. 33203
HAYWOOD COUNTY
STATION: 13+80.00 -LREV-

REPLACES BRIDGE NO. 9

STATE OF NORTH CAROLINA
DEPARTMENT OF TRANSPORTATION
RALEIGH

BRIDGE ON SR 1100
OVER CRAWFORD CREEK
BETWEEN DEAD END AND
US 276
24'-0" CLEAR ROADWAY - 60° SKEW

REVISIONS						SHEET NO.
NO.	BY:	DATE:	NO.	BY:	DATE:	25
1			3			TOTAL SHEETS
2			4			26

STATE	STATE PROJECT REFERENCE NO.	SHEET NO.	TOTAL SHEETS
N.C.	B-3567	26	26

STATE REGL NO.	R.A. PROJ. NO.	DESCRIPTION

PLANTING DETAILS

SEEDLING / LINER BAREROOT PLANTING DETAIL

HEALING IN

1. Locate a healing-in site in a shady, well protected area.
2. Excavate a flat bottom trench 12 inches deep and provide drainage.

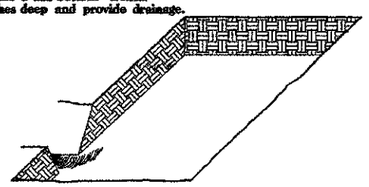

3. Backfill the trench with 2 inches well rotted sawdust. Place a 2 inch layer of well rotted sawdust at a sloping angle at one end of the trench.

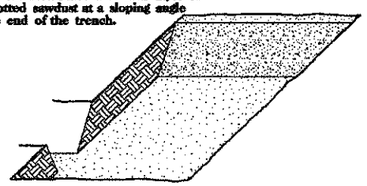

4. Place a single layer of plants against the sloping end so that the root collar is at ground level.

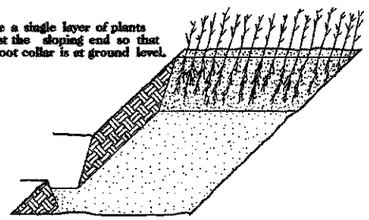

5. Place a 2 inch layer of well rotted sawdust over the roots maintaining a sloping angle.

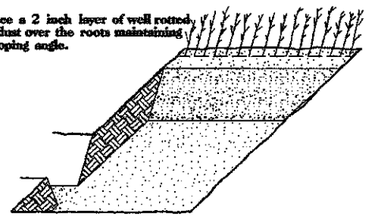

6. Repeat layers of plants and sawdust as necessary and water thoroughly.

DIBBLE PLANTING METHOD
USING THE KBC PLANTING BAR

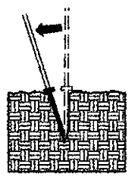

1. Insert planting bar as shown and pull handle toward planter.

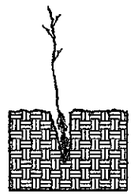

2. Remove planting bar and place seedling at correct depth.

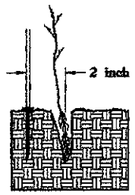

3. Insert planting bar 2 inches toward planter from seedling.

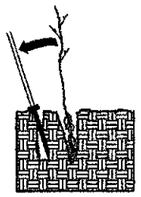

4. Pull handle of bar toward planter, firming soil at bottom.

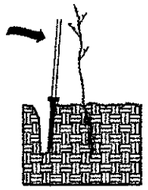

5. Push handle forward firming soil at top.

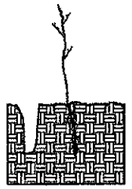

6. Leave compaction hole open. Water thoroughly.

PLANTING NOTES:

PLANTING BAG
During planting, seedlings shall be kept in a moist canvas bag or similar container to prevent the root systems from drying.

KBC PLANTING BAR
Planting bar shall have a blade with a triangular cross section, and shall be 12 inches long, 4 inches wide and 1 inch thick at center.

ROOT PRUNING
All seedlings shall be root pruned, if necessary, so that no roots extend more than 10 inches below the root collar.

REFORESTATION

☐ TREE REFORESTATION SHALL BE PLANTED 6 FT. TO 10 FT. ON CENTER, RANDOM SPACING, AVERAGING 8 FT. ON CENTER, APPROXIMATELY 680 PLANTS PER ACRE.

REFORESTATION

MIXTURE, TYPE, SIZE, AND FURNISH SHALL CONFORM TO THE FOLLOWING:

40%	LIRIODENDRON TULIPIFERA	TULIP POPLAR	12 in - 18 in BR
30%	PLATANUS OCCIDENTALIS	SYCAMORE	12 in - 18 in BR
30%	FRAXINUS PENNSYLVANICA	GREEN ASH	12 in - 18 in BR

REFORESTATION DETAIL SHEET

N.C.D.O.T. - ROADSIDE ENVIRONMENTAL UNIT