PROJ. NO. B-5230

29 LINCOLN COUNTY

B.M. #1 - RR SPIKE IN BASE OF 24" RED OAK, 88' RIGHT OF STA. 13+56.00 -L-, ELEV. = 814.93'

B.M. #2 - RR SPIKE IN BASE OF 24" MAPLE, 74' RIGHT OF STA. 14+64.00 -L-, ELEV. = 802.42'

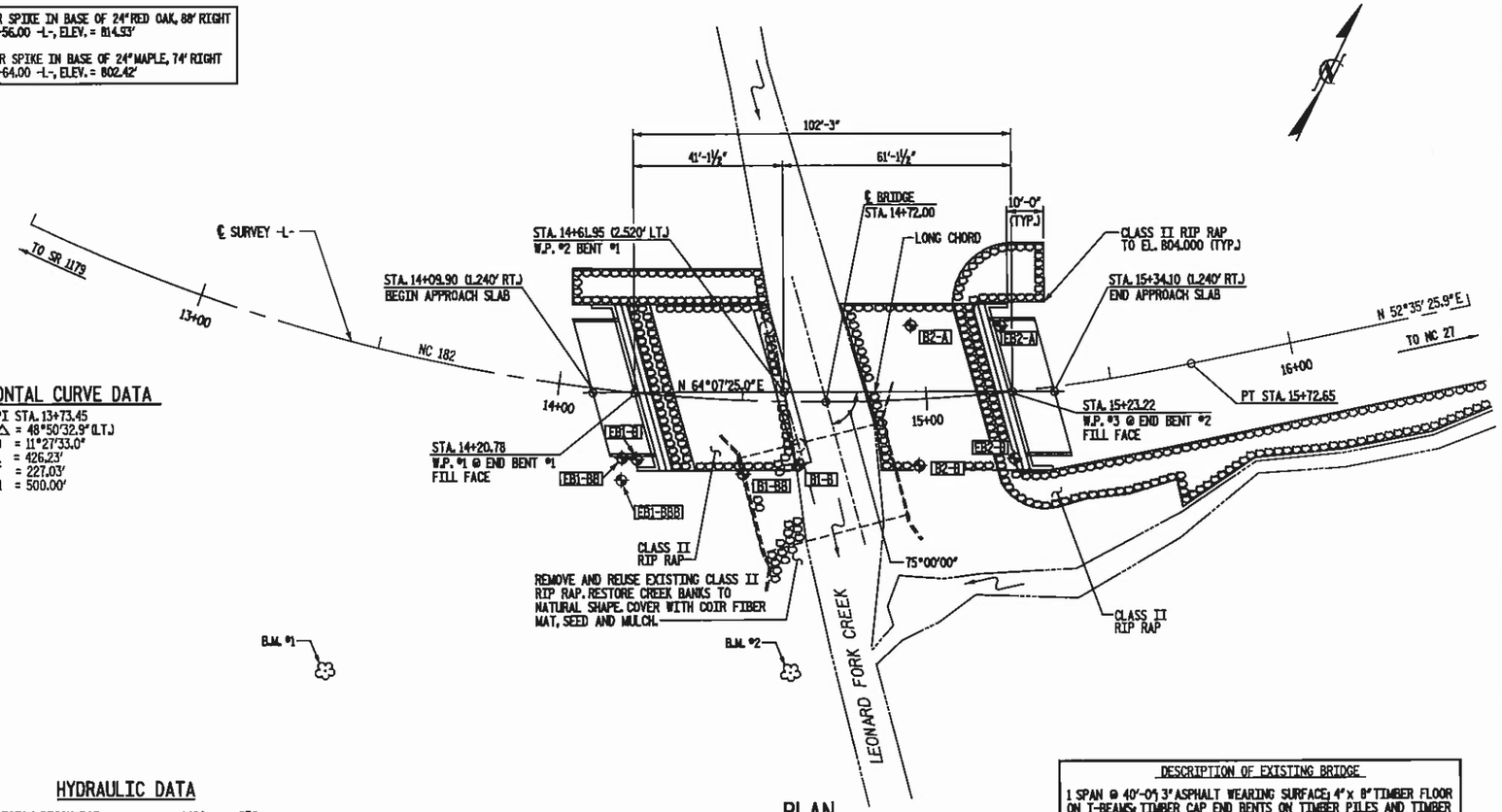

HORIZONTAL CURVE DATA

PI STA. 13+73.45
△ = 48°50'32.9" (LT.)
D = 11°27'33.0"
L = 426.23'
T = 227.03'
R = 500.00'

PLAN

SCALE: 1" = 20'-0"

HYDRAULIC DATA

DESIGN DISCHARGE	=	1400	CFS
DESIGN FREQUENCY	=	50	YRS
DESIGN HW ELEVATION	=	802.42	FT
DRAINAGE AREA	=	3.72	SQ MI
BASE DISCHARGE (Q_{100})	=	1700	CFS
BASE HW ELEVATION	=	803.03	FT

-6.7458% △ -3.5937%
P.I. 13+40.00
EL. 813.75
L = 170'

GRADE DATA

-3.5937% △ +2.2297%
P.I. 16+60.00
EL. 802.25
L = 300'

GRADE DATA

DESCRIPTION OF EXISTING BRIDGE

1 SPAN @ 40'-0"; 3" ASPHALT WEARING SURFACE; 4" x 8" TIMBER FLOOR ON I-BEAMS; TIMBER CAP END BENTS ON TIMBER PILES AND TIMBER BULKHEADS; 24'-0" CLEAR ROADWAY WIDTH SHALL BE REMOVED. THE EXISTING TIMBER FLOOR AND EXISTING STEEL I-BEAMS WILL BE SALVAGED AND RETURNED TO NCDOT.

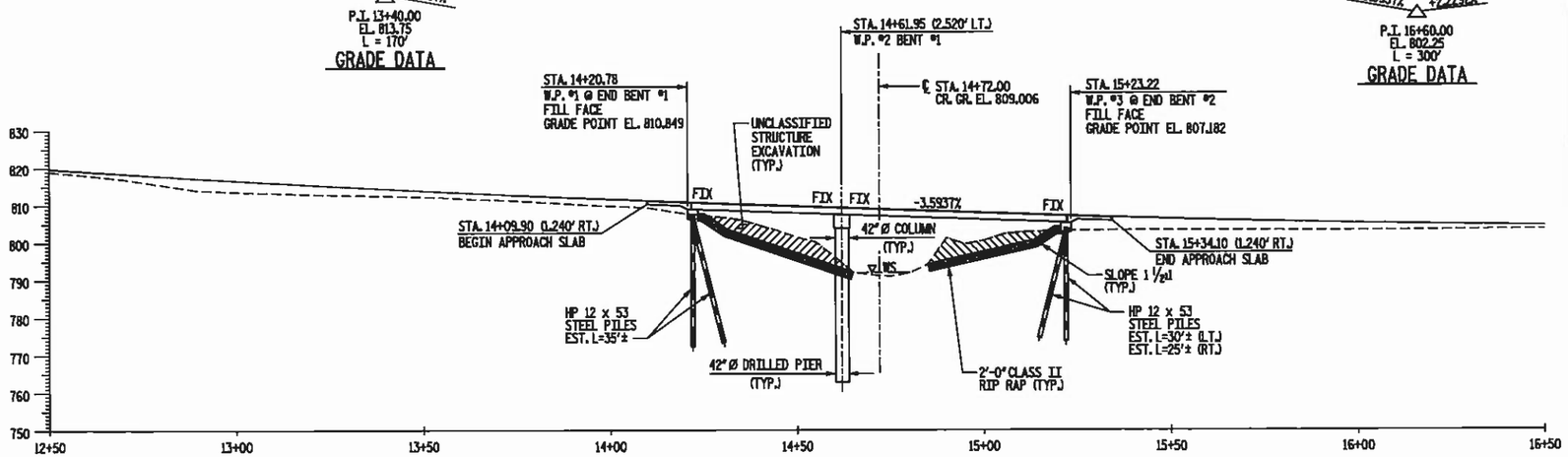

PROFILE ALONG ℄ SURVEY

SCALE: 1" = 20'

NOTES

1. PILES FOR END BENT NO. 1 AND NO. 2 SHALL BE DRIVEN TO A MINIMUM BEARING CAPACITY OF 50 TONS EACH.
2. THE QUANTITY OF RIP RAP TO BE PAID FOR WILL BE THE ACTUAL NUMBER OF TONS OF EACH CLASS OF RIP RAP WHICH HAS BEEN INCORPORATED INTO THE COMPLETED AND ACCEPTED WORK. THE RIP RAP WILL BE MEASURED BY BEING WEIGHED IN TRUCKS ON CERTIFIED PLATFORM SCALES OR OTHER CERTIFIED WEIGHING DEVICES. THE QUANTITY OF RIP RAP WILL BE PAID FOR AT THE CONTRACT UNIT PRICE PER TON.

		FILTER FABRIC
PLAIN RIP RAP CLASS I (1'-6" THICK)		
TOTAL	3 TONS	7 SQUARE YARDS
PLAIN RIP RAP CLASS II (2'-0" THICK)		
END BENT NO. 1	250 TONS	230 SQUARE YARDS
END BENT NO. 2	530 TONS	630 SQUARE YARDS
TOTAL	780 TONS	860 SQUARE YARDS
PLAIN RIP RAP CLASS B (1'-0" THICK)		
TOTAL	20 TONS	55 SQUARE YARDS

3. THIS STRUCTURE HAS BEEN DESIGNED IN ACCORDANCE WITH FHWA'S TECHNICAL ADVISORY T5140.20 (SCOUR AT BRIDGES).
4. FOR DRILLED PIERS, SEE SPECIAL PROVISIONS.
5. THE DRILLED PIERS AT BENT NO. 1 HAVE BEEN DESIGNED FOR BOTH SKIN FRICTION AND TIP BEARING. THE REQUIRED TIP BEARING CAPACITY IS 25 TSF.
6. DRILLED PIERS FOR BENT NO. 1 HAVE BEEN DESIGNED FOR AN APPLIED LOAD OF 170 TONS EACH AT THE TOP OF THE COLUMN.
7. DRILLED PIERS AT BENT NO. 1 SHALL EXTEND TO AN ELEVATION NO HIGHER THAN EL. 754.0 FT. AT COLUMN 1, COLUMN 2, AND COLUMN 3, SATISFY THE REQUIRED TIP BEARING CAPACITY, AND HAVE A MINIMUM PENETRATION OF 10.9 FT. INTO ROCK AS DEFINED BY THE DRILLED PIERS SPECIAL PROVISION.
8. THE SCOUR CRITICAL ELEVATION FOR BENT NO. 1 IS EL. 786.0 FT. THE SCOUR CRITICAL ELEVATION IS FOR USE BY MAINTENANCE FORCES TO MONITOR POSSIBLE SCOUR PROBLEMS DURING THE LIFE OF THE STRUCTURE.
9. PERMANENT STEEL CASING MAY BE REQUIRED FOR DRILLED PIERS AT BENT NO. 1. IF REQUIRED, THE CASING SHALL NOT EXTEND BELOW ELEVATION 768.8 FT. WITHOUT THE ENGINEER'S PERMISSION.
10. FOR PERMANENT STEEL CASING, SEE SPECIAL PROVISIONS FOR DRILLED PIERS.
11. CSL TUBES ARE REQUIRED AND CSL TESTING MAY BE REQUIRED FOR THE DRILLED PIERS AT BENT NO. 1. SEE SPECIAL PROVISION FOR CROSSHOLE SONIC LOGGING.
12. REMOVAL OF EXISTING PAVEMENT AND UNCLASSIFIED STRUCTURE EXCAVATION SHALL BE INCLUDED IN THE LUMP SUM PRICE BID FOR "EXCAVATION AND EMBANKMENT".
13. PILES AT END BENT NO. 1 SHALL BE DRIVEN TO AN ELEVATION NO HIGHER THAN EL. 773.0 FT. AND SATISFY THE BEARING CAPACITY OF 50 TONS.
14. PILES AT END BENT NO. 2 SHALL BE DRIVEN TO AN ELEVATION NO HIGHER THAN EL. 779.0 FT. AND SATISFY THE BEARING CAPACITY OF 50 TONS.
15. THE STEEL PILES SHALL BE GALVANIZED IN ACCORDANCE WITH SECTION 1076 OF THE STANDARD SPECIFICATIONS.
16. WHEN DRIVING PILES, THE MAXIMUM BLOW COUNT SHALL NOT BE EXCEEDED.
17. CURRENT ADT = 2,200 VPD.
18. DELINEATORS ON BARRIER RAIL AND ON STEEL BEAM GUARDRAIL SHALL BE INCLUDED IN THE PRICE BID FOR STEEL BEAM GUARDRAIL.
19. FOR CRANE SAFETY, SEE SPECIAL PROVISIONS.
20. FOR FALSEWORK AND FORMWORK, SEE SPECIAL PROVISIONS.
21. FOR SUBMITTAL OF WORKING DRAWINGS, SEE SPECIAL PROVISIONS.
22. PILES SHALL BE DRIVEN TO THE MINIMUM TIP ELEVATIONS AS SHOWN ON THE PLANS. ACCORDING TO THE AVAILABLE GEOTECHNICAL INFORMATION, BORING EB1-BBB AT END BENT 1 INDICATES A 5.5' DEEP LAYER OF WEATHERED ROCK OCCURRING APPROXIMATELY SIX FEET BELOW THE SURFACE OF THE EXISTING GROUND. BELOW THE WEATHERED ROCK IS A 15.5' DEEP LAYER OF MEDIUM DENSE TO DENSE DARK GRAY AND WHITE SILTY FINE TO COARSE SAND. PREDRILLING OF A PILE OR PILES MAY BE REQUIRED TO PENETRATE THE WEATHERED ROCK LAYER IN ORDER TO REACH THE INDICATED PILE TIP ELEVATION. THE CONTRACTOR WILL BE COMPENSATED IF PREDRILLING IS REQUIRED AS DIRECTED BY THE ENGINEER.

◈ GEOTECH BORE HOLES LOCATION

PROJECT NO. 42832
COUNTY: LINCOLN
STATION: 14+72.00
REPLACES BRIDGE NO. 29

STATE OF NORTH CAROLINA
DEPARTMENT OF TRANSPORTATION
RALEIGH

BRIDGE NO. 29 ON NC 182
OVER LEONARD FORK CREEK

Florence & Hutcheson
CONSULTING ENGINEERS
5121 Kingdom Way, Suite 100 Raleigh, NC 27607
NC License No: F-0286

NORTH CAROLINA PROFESSIONAL SEAL 20532 ENGINEER JAMES E. MONDOLFI
12-7-10

REVISIONS						SHEET NO.
NO.	BY	DATE	NO.	BY	DATE	1
1			3			TOTAL SHEETS
2			4			31

DRAWN BY: K.M. MOBLEY DATE: JAN. 2010
CHECKED BY: J.E. MONDOLFI DATE: JAN. 2010

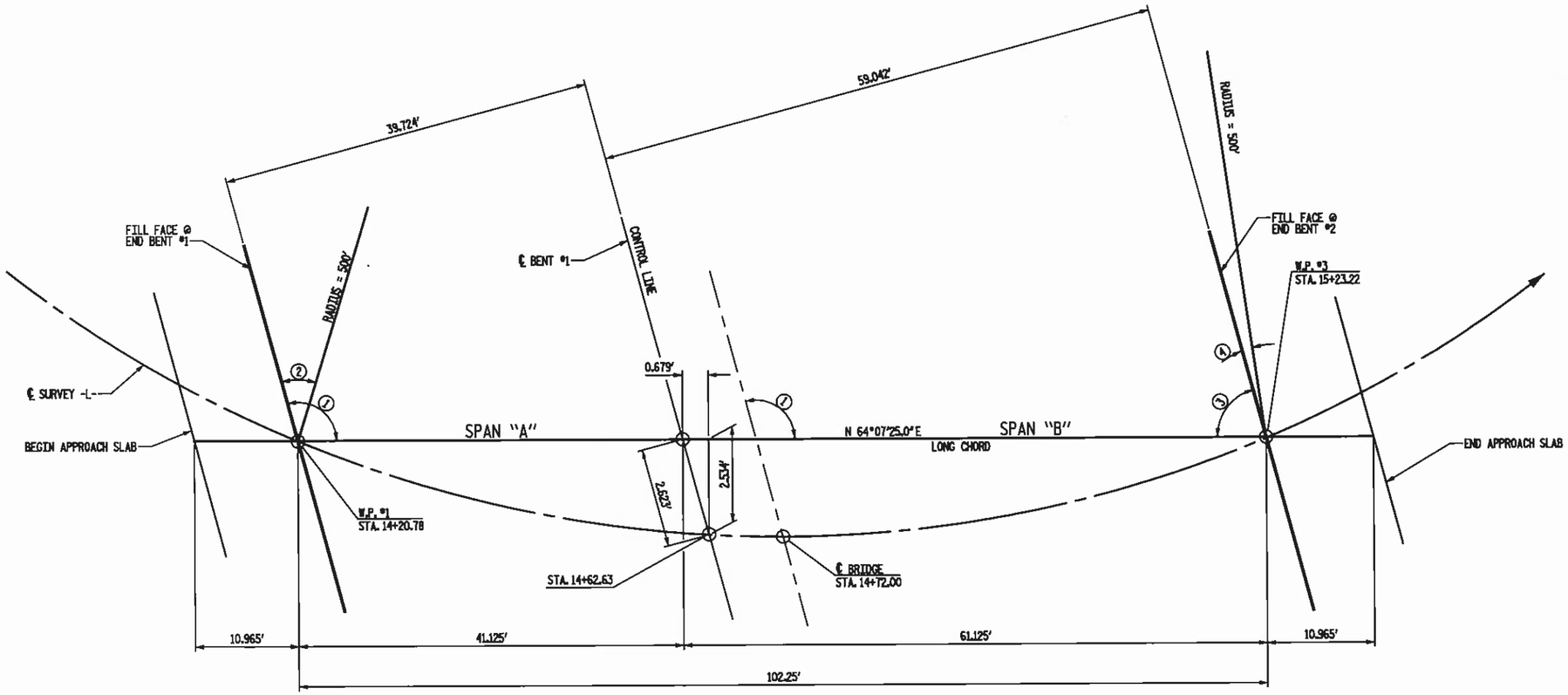

LONG CHORD LAYOUT

(BRIDGE IS PARALLEL TO LONG CHORD)

ANGLES

1. 105°00'00"
2. 20°52'08"
3. 75°00'00"
4. 9°07'53"

PROJECT NO. 42832
COUNTY: LINCOLN
STATION: 14+72.00
REPLACES BRIDGE NO. 29

STATE OF NORTH CAROLINA
DEPARTMENT OF TRANSPORTATION
RALEIGH

LONG CHORD LAYOUT

REVISIONS						SHEET NO.
NO.	BY	DATE	NO.	BY	DATE	2
1			3			TOTAL SHEETS
2			4			31

Florence & Hutcheson
CONSULTING ENGINEERS
5121 Kingdom Way, Suite 100 Raleigh, NC 27607
NC License No. F-0258

NORTH CAROLINA PROFESSIONAL SEAL 20332 ENGINEER JAMES E. MONDOLFI
12-7-10

NOT TO SCALE

DRAWN BY: K.M. MOBLEY DATE: JAN. 2010
CHECKED BY: J.E. MONDOLFI DATE: JAN. 2010

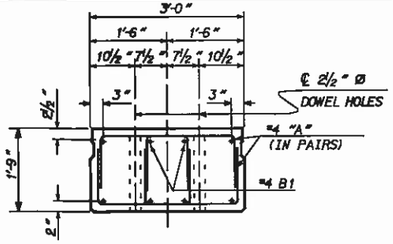

SLAB END ELEVATION

THE 2½" DOWEL HOLES AT FIXED ENDS OF SLAB SECTIONS SHALL BE FILLED WITH GROUT.

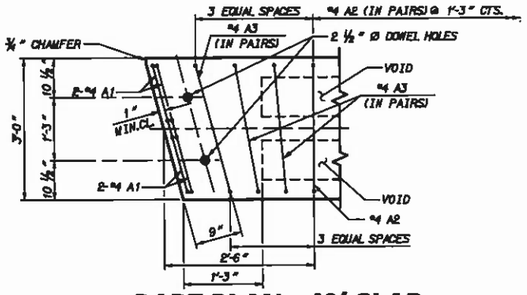

PART PLAN - 40' SLAB

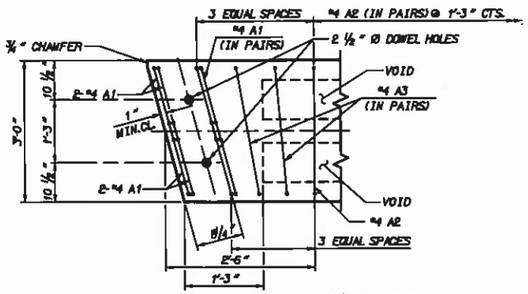

PART PLAN - 60' SLAB

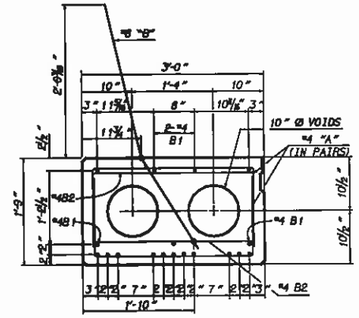

40' SPAN

14 -½" Ø H.S.STRANDS
EXTERIOR SLAB SECTIONS

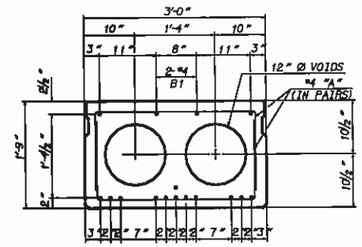

40' SPAN

14 -½" Ø H.S.STRANDS
INTERIOR SLAB SECTIONS

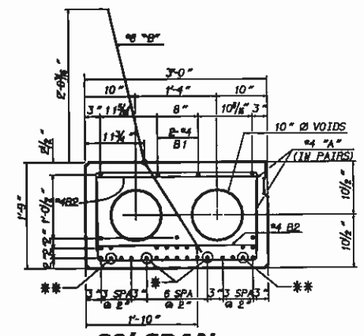

60' SPAN

29 -½" Ø H.S.STRANDS
EXTERIOR SLAB SECTIONS

⊙ STRAND IS SHEATHED. SEE SHEATH CHART.

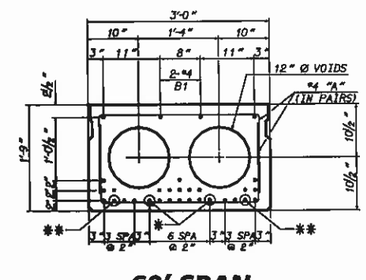

60' SPAN

29 -½" Ø H.S.STRANDS
INTERIOR SLAB SECTIONS

GENERAL NOTES

ASSUMED LIVE LOAD - HS 20-44 OR ALTERNATE LOADING.

CONCRETE: $f'c$ - 5000 psi 40' SPAN ONLY
✱ CONCRETE: $f'c_i$ - 4000 psi 40' SPAN ONLY
CONCRETE: $f'c$ - 7000 psi 60' SPAN ONLY
✱ CONCRETE: $f'c_i$ - 5000 psi 60' SPAN ONLY

✱ (COMPRESSIVE STRENGTH @ TRANSFER OF STRESSING FORCE.)

ALL PRESTRESS STRANDS SHALL MEET THE REQUIREMENTS OF ASTM A416.

ALL PRESTRESS STRANDS SHALL BE 7 WIRE, LOW RELAXATION, HIGH STRENGTH CABLES IN ACCORDANCE WITH THE SPECIFICATIONS.

SIZE	TYPE	AREA	ULTIMATE STR.
1/2" Ø	HIGH STR.	0.153 □" PER CABLE	41,300#

APPLIED FORCE
30,980# PER CABLE

STRUCTURAL STEEL ITEMS SHALL BE OF A GRADE CONFORMING TO EITHER ASTM A36 OR A373, EXCEPT HIGH STRENGTH BOLTS. HIGH STRENGTH BOLTS SHALL BE ASTM A325. ALL STRUCTURAL STEEL SHALL BE GALVANIZED AS PER THE SPECIFICATIONS.

ALL MATERIAL AND WORKMANSHIP SHALL COMPLY WITH THE APPLICABLE REQUIREMENTS OF THE STANDARD SPECIFICATIONS FOR ROADS AND STRUCTURES OF THE NC DEPARTMENT OF TRANSPORTATION DATED JULY 2006 AND WITH THE SPECIAL PROVISIONS.

THE ULTIMATE STRENGTH OF THE CORED SLAB UNIT MUST MEET THE REQUIREMENTS OF THE APPLICABLE AASHTO SPECIFICATIONS.

STRANDS SHALL BE CUT FLUSH WITH ENDS OF SLABS.

A POSITIVE HOLD DOWN SYSTEM MUST BE EMPLOYED TO PREVENT VOIDS FROM RISING.

NOTE:
SPIRAL WIRE REINFORCEMENT MAY BE USED IN LIEU OF DEFORMED BARS FOR STIRRUPS. MIN.W3.5 X 6" PITCH.

UNLESS OTHERWISE NOTED ON THE PLANS, ALL EXPOSED CORNERS ON STRUCTURES SHALL BE CHAMFERED ¾".

APPLY EPOXY PROTECTIVE COATING TO THE ENDS OF THE CORED SLAB UNITS.

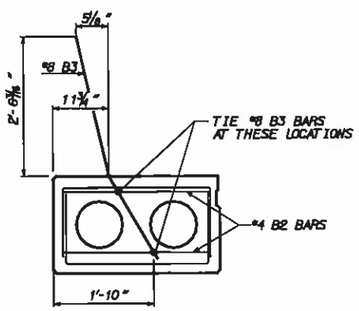

TIE LOCATION FOR #8 B3

(LEFT EXTERIOR SLAB UNIT)

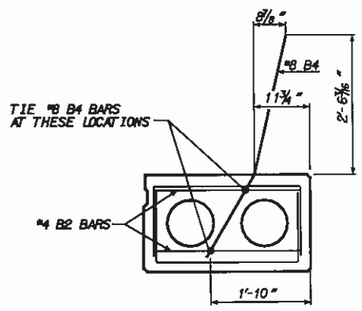

TIE LOCATION FOR #8 B4

(RIGHT EXTERIOR SLAB UNIT)

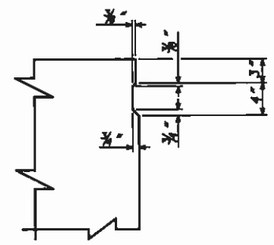

SHEAR KEY DETAIL

EXTERIOR SLAB UNIT	40'	60'
CAMBER (SLAB UNIT ALONE IN PLACE)	0.637" (UP)	2.389" (UP)
DEFLECTION (SUPERIMPOSED DEAD LOAD)	0.121" (DOWN)*	0.460" (DOWN)*
FINAL DEFLECTION	0.465" (UP)	1.939" (UP)

* INCLUDES FUTURE WEARING SURFACE

INTERIOR SLAB UNIT	40'	60'
CAMBER (SLAB UNIT ALONE IN PLACE)	0.707" (UP)	2.787" (UP)
DEFLECTION (SUPERIMPOSED DEAD LOAD)	0.121" (DOWN)*	0.460" (DOWN)*
FINAL DEFLECTION	0.581" (UP)	2.327" (UP)

* INCLUDES FUTURE WEARING SURFACE

SHEATH CHART

SPAN LENGTH	NUMBER OF SHEATHED STRANDS PER EXTERIOR SLAB SECTIONS	NUMBER OF SHEATHED STRANDS PER INTERIOR SLAB SECTIONS
60'	✱2 @ 2"	✱2 @ 2"
60'	✱✱2 @ 2"	✱✱2 @ 2"

✱ BOND SHALL BE BROKEN ON THESE STRANDS FOR A DISTANCE OF 4 FEET FROM THE END OF THE SLAB

✱✱ BOND SHALL BE BROKEN ON THESE STRANDS FOR A DISTANCE OF 6 FEET FROM THE END OF THE SLAB

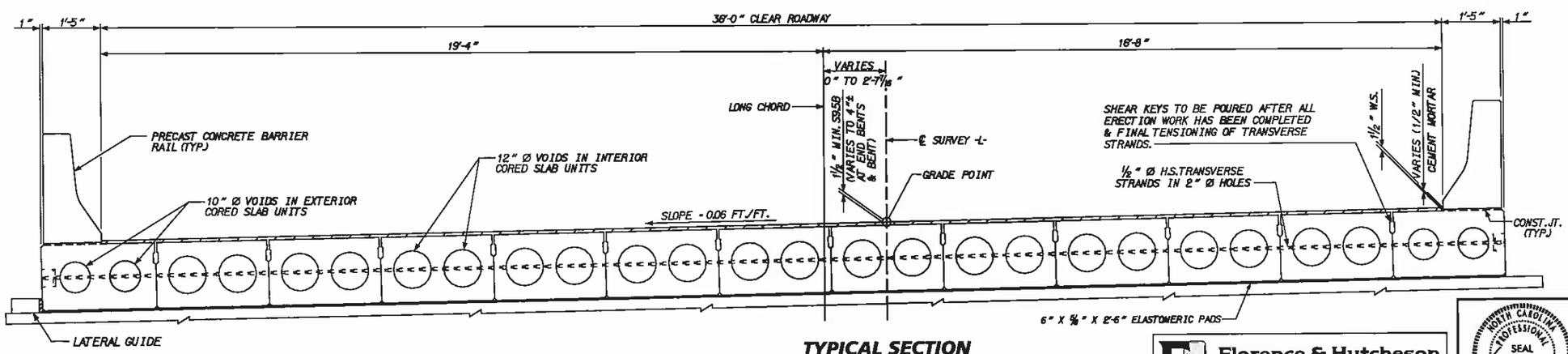

TYPICAL SECTION

NOT TO SCALE

PROJECT NO. 42832
COUNTY: LINCOLN
STATION: 14+72.00
REPLACES BRIDGE NO. 29

STATE OF NORTH CAROLINA
DEPARTMENT OF TRANSPORTATION
RALEIGH

STANDARD PRESTRESSED CORED SLAB
40' AND 60' SPANS
36' CLEAR ROADWAY - 75° SKEW

Florence & Hutcheson
CONSULTING ENGINEERS
5131 Kingdom Way, Suite 100 Raleigh, NC 27607
NC License No. F-0258

NORTH CAROLINA PROFESSIONAL SEAL 20537 ENGINEER JAMES E. MONDOLFI
12-7-10

REVISIONS						
NO.	BY	DATE	NO.	BY	DATE	
1			3			
2			4			

SHEET NO. 3
TOTAL SHEETS 31

DRAWN BY: K.M. MOBLEY DATE: JAN. 2010
CHECKED BY: J.E. MONDOLFI DATE: JAN. 2010

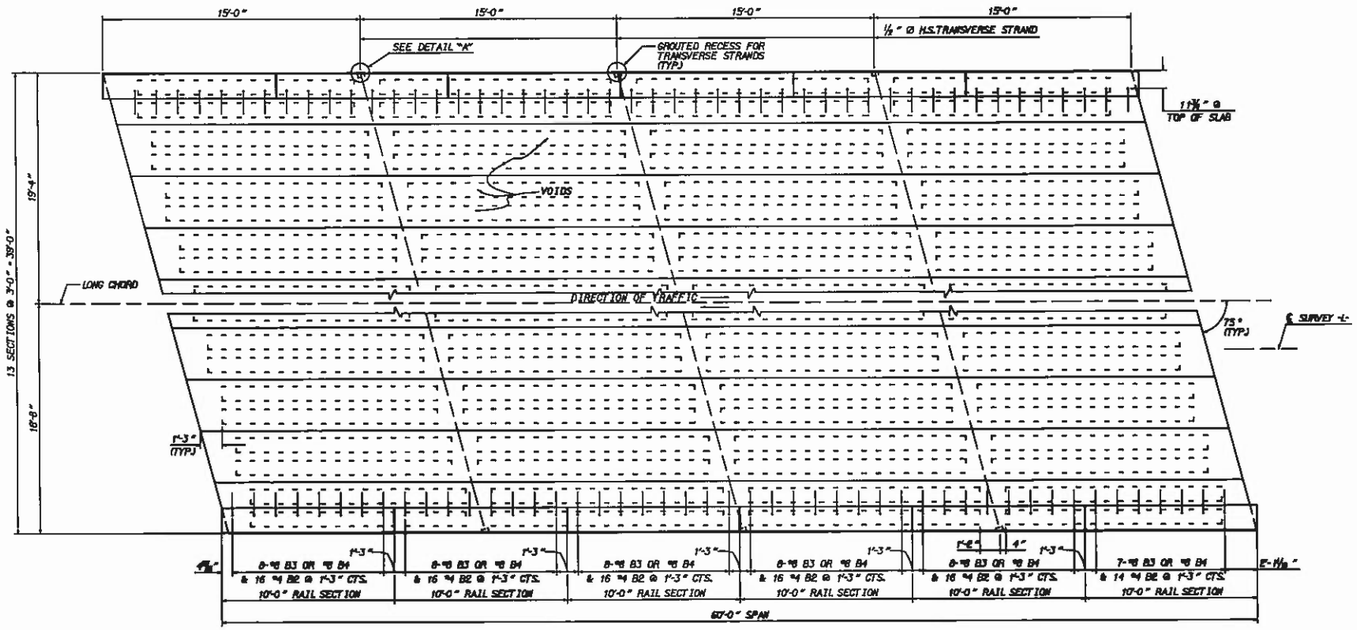

PLAN VIEW - 60' SPAN

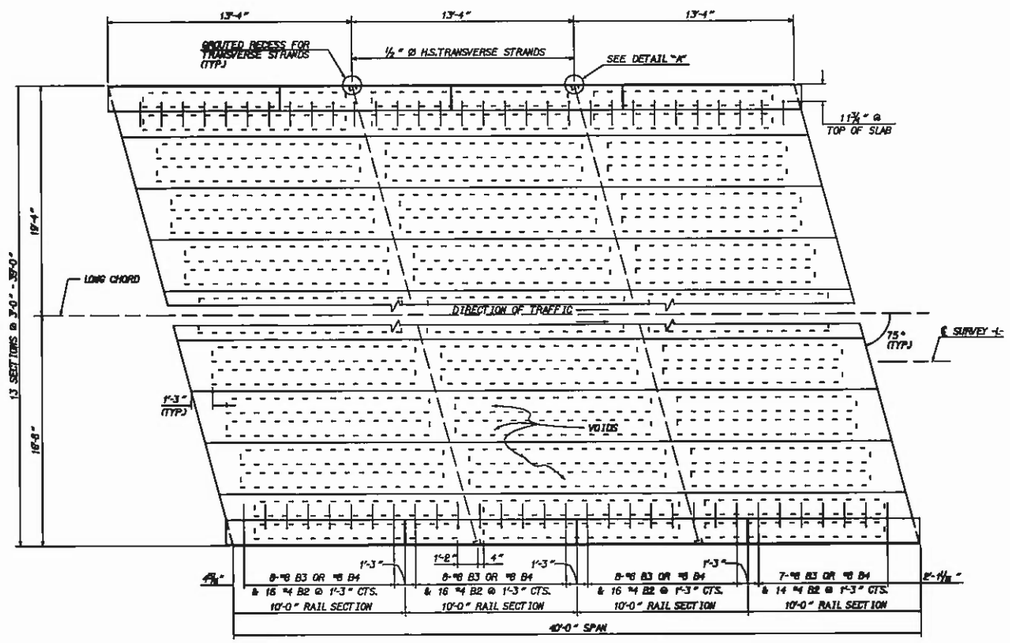

PLAN VIEW - 40' SPAN

BILL OF MATERIAL FOR ONE 40'-0" INTERIOR CORED SLAB SECTION

BAR	NO.	SIZE	TYPE	LENGTH	WEIGHT
B1	4	#4	STR	20'-9"	55
A1	8	#4	1	4'-8"	25
A2	72	#4	1	5'-4"	256
A3	8	#4	1	5'-5"	29
REINFORCING STEEL				LBS.	365
5000 P.S.I. CONCRETE				C.Y.	5.5
0.5" Ø L.R. STRANDS				NO.	14

BILL OF MATERIAL FOR ONE 60'-0" INTERIOR CORED SLAB SECTION

BAR	NO.	SIZE	TYPE	LENGTH	WEIGHT
B1	4	#4	STR	30'-9"	82
A1	16	#4	1	4'-8"	50
A2	112	#4	1	5'-4"	399
A3	8	#4	1	5'-5"	29
REINFORCING STEEL				LBS.	560
7000 P.S.I. CONCRETE				C.Y.	8.2
0.5" Ø L.R. STRANDS				NO.	29

BILL OF MATERIAL FOR ONE 40'-0" EXTERIOR CORED SLAB SECTION

BAR	NO.	SIZE	TYPE	LENGTH	WEIGHT
B1	8	#4	STR	20'-9"	111
B2	62	#4	STR	2'-8"	110
#B3 OR #B4	31	#8	2 OR 3	4'-5"	366
A1	8	#4	1	4'-8"	25
A2	72	#4	1	5'-4"	256
A3	8	#4	1	5'-5"	29
REINFORCING STEEL				LBS.	531
#-EPOXY COATED REINFORCING STEEL				LBS.	366
5000 P.S.I. CONCRETE				C.Y.	6.2
0.5" Ø L.R. STRANDS				NO.	14

BILL OF MATERIAL FOR ONE 60'-0" EXTERIOR CORED SLAB SECTION

BAR	NO.	SIZE	TYPE	LENGTH	WEIGHT
B1	4	#4	STR	30'-9"	82
B2	94	#4	STR	2'-8"	168
#B3 OR #B4	47	#8	2 OR 3	4'-5"	555
A1	16	#4	1	4'-8"	50
A2	112	#4	1	5'-4"	399
A3	8	#4	1	5'-5"	29
REINFORCING STEEL				LBS.	728
#-EPOXY COATED REINFORCING STEEL				LBS.	555
7000 P.S.I. CONCRETE				C.Y.	9.2
0.5" Ø L.R. STRANDS				NO.	29

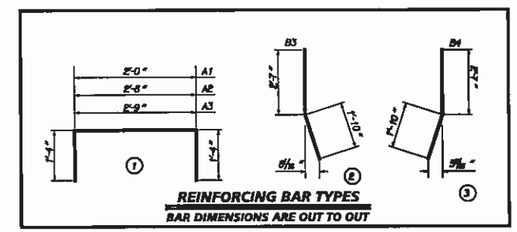

REINFORCING BAR TYPES
BAR DIMENSIONS ARE OUT TO OUT

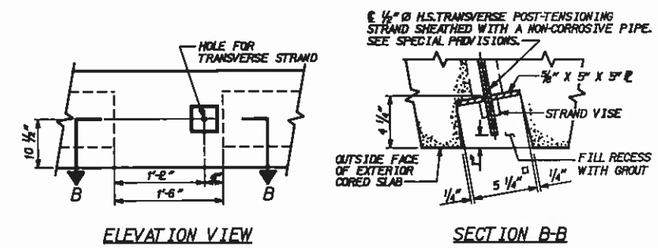

ELEVATION VIEW

SECTION B-B

DETAIL "A"

GROUTED RECESS AT END OF POST-TENSIONED STRAND CORED SLABS

PROJECT NO. 42832
COUNTY: LINCOLN
STATION: 14+72.00
REPLACES BRIDGE NO. 29

STATE OF NORTH CAROLINA
DEPARTMENT OF TRANSPORTATION
RALEIGH

STANDARD PRECAST CONCRETE
CORED SLAB UNITS
40' AND 60' SPANS
36' CLEAR ROADWAY - 75° SKEW

REVISIONS						SHEET NO.
NO.	BY	DATE	NO.	BY	DATE	4
1			3			TOTAL SHEETS
2			4			31

Florence & Hutcheson
CONSULTING ENGINEERS
5131 Kingsley Way, Suite 100 Raleigh, NC 27607
NC License No: F-0158

NORTH CAROLINA PROFESSIONAL SEAL 20532 JAMES E. MONDOLFI
12-7-10

DRAWN BY: E.M. MOBLEY DATE: JAN. 2010
CHECKED BY: J.E. MONDOLFI DATE: JAN. 2010

NOT TO SCALE

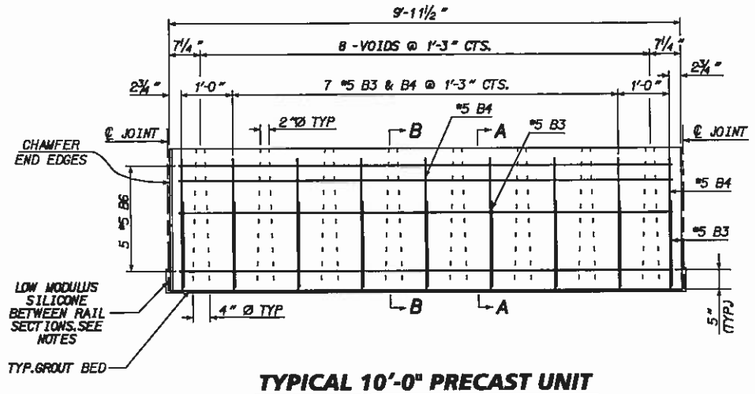

TYPICAL 10'-0" PRECAST UNIT

BILL OF MATERIAL					
FOR ONE 10'-0" RAIL SECTION					
BAR	NO.	SIZE	TYPE	LENGTH	WEIGHT
B3	9	#5	1	4'-11"	46
B4	9	#5	2	2'-8"	25
B6	5	#5	STR	9'-7"	50
REINFORCING STEEL LBS. = 121					
CLASS AA CONCRETE CU. YDS. = 1.0					

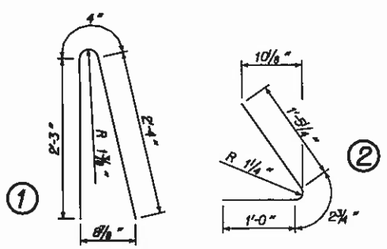

REINFORCING BAR TYPES

BAR DIMENSIONS ARE OUT TO OUT

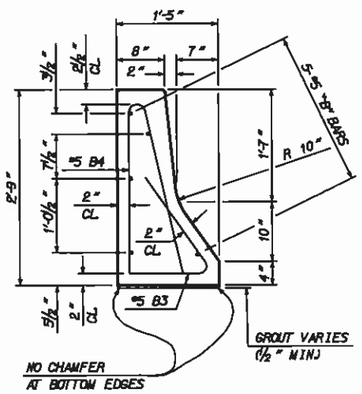

SECTION A-A

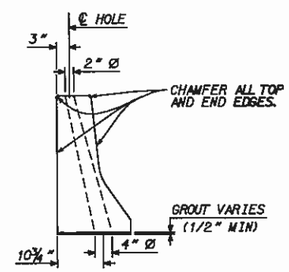

SECTION B-B

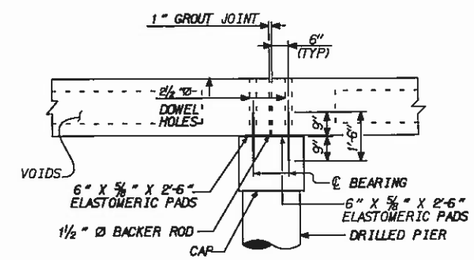

SECTION AT BENT 1

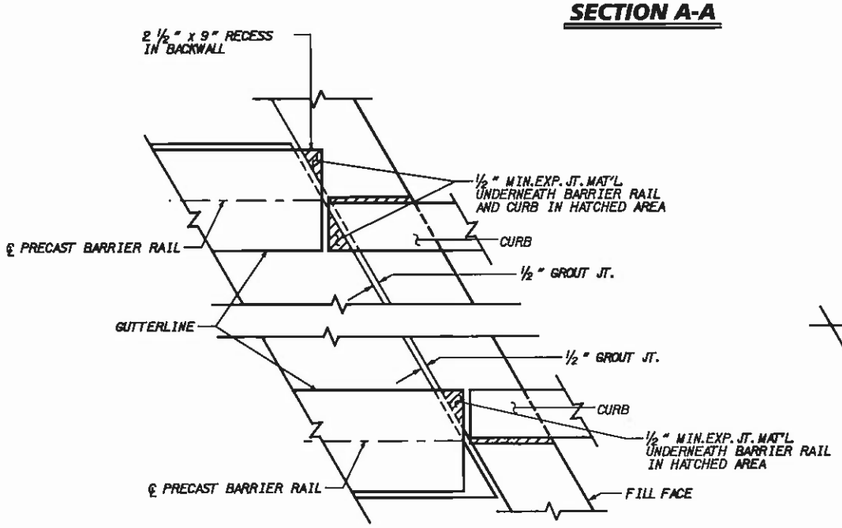

PLAN OF BARRIER RAIL AND CURB CORED SLAB AT END BENTS

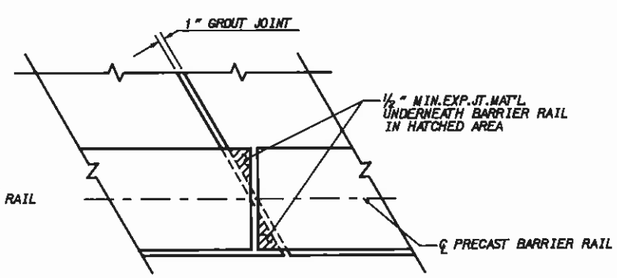

PLAN OF BARRIER RAIL CORED SLAB AT BENT

NOTES

EACH PRECAST RAIL UNIT SHALL BE CAST WITH CLASS AA CONCRETE.

EACH PRECAST RAIL UNIT SHALL BE SUPPLIED WITH LIFTING DEVICE(S). NO CABLES ARE TO BE WRAPPED AROUND THE RAIL UNITS FOR LIFTING.

THE JOINT SEALER SHALL BE LOW MODULUS SILICONE SEALANT. SEE SECTION 1028-4 OF THE STANDARD SPECIFICATIONS.

℄ RAIL TO BE FLUSH WITH ENDS OF CORED SLAB UNITS AT EACH END OF SPAN.

PROJECT NO. 42832
COUNTY: LINCOLN
STATION: 14+72.00
REPLACES BRIDGE NO. 29

STATE OF NORTH CAROLINA
DEPARTMENT OF TRANSPORTATION
RALEIGH

STANDARD PRECAST CONCRETE BARRIER RAIL SECTIONS
40' AND 60' SPANS
36' CLEAR ROADWAY - 75° SKEW

DRAWN BY: K.M. MORLEY DATE: JAN. 2010
CHECKED BY: J.E. MONDOLFI DATE: JAN. 2010

NOT TO SCALE

Florence & Hutcheson
CONSULTING ENGINEERS
5121 Kingdom Way, Suite 100 Raleigh, NC 27607
NC License No: F-0255

NORTH CAROLINA PROFESSIONAL SEAL 29632 ENGINEER JAMES E. MONDOLFI
12-7-10

REVISIONS						
NO.	BY	DATE	NO.	BY	DATE	
1			3			
2			4			

SHEET NO. 5
TOTAL SHEETS 31

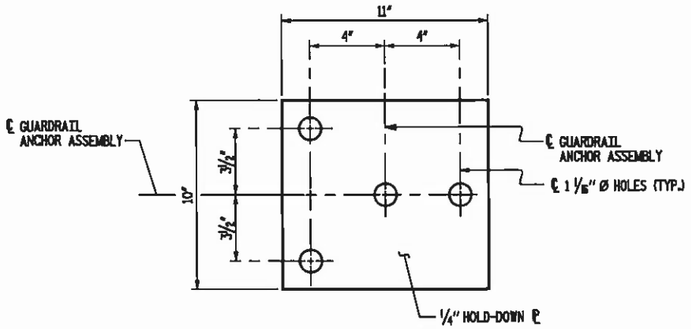

PLAN

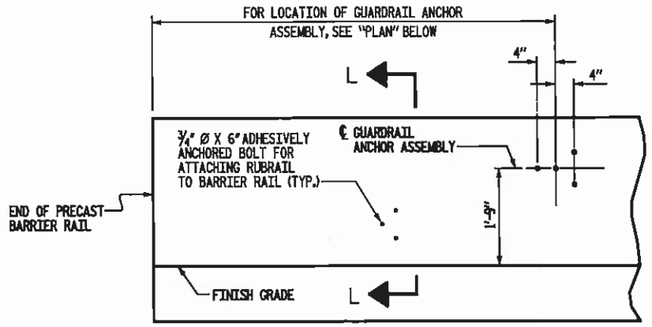

ELEVATION

FOR LOCATION OF RUBRAIL, SEE ROADWAY STD. 862.03

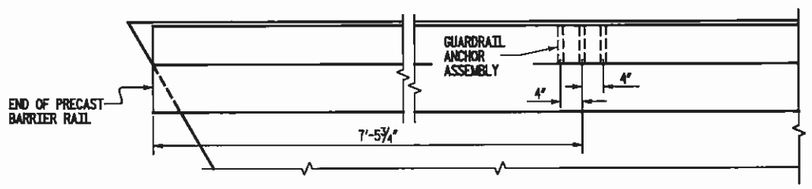

PLAN

LOCATION OF ANCHORS FOR GUARDRAIL

FOR CONCRETE BARRIER RAIL ONLY
END BENT #1 SHOWN, END BENT #2 SIMILAR

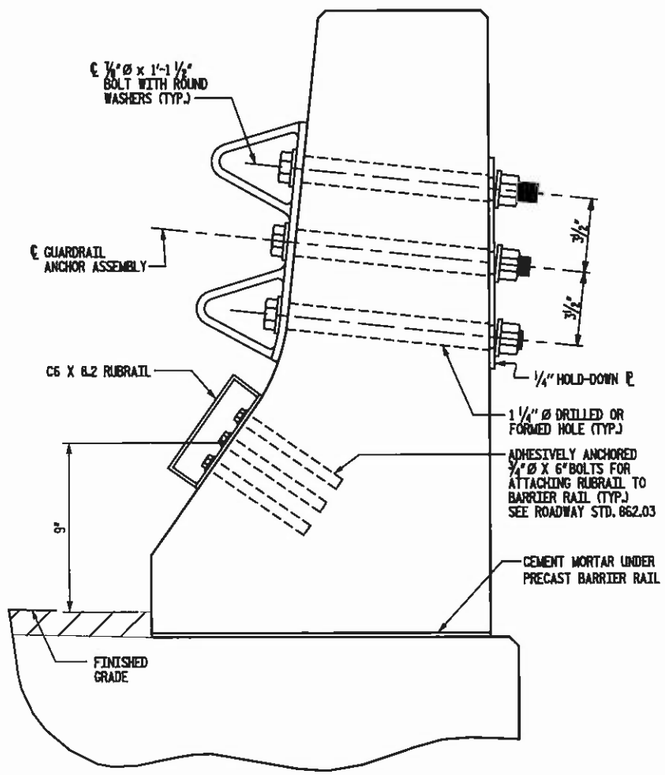

SECTION L-L

GUARDRAIL ANCHOR ASSEMBLY DETAILS

FOR CONCRETE BARRIER RAIL ONLY
(FOR LOCATION OF GUARDRAIL ANCHOR ASSEMBLY, SEE THIS SHEET)

NOTES

THE GUARDRAIL ANCHOR ASSEMBLY SHALL CONSIST OF A 1/4" HOLD DOWN PLATE AND 7/8" Ø BOLTS WITH NUTS AND WASHERS, RUBRAIL, AND ADHESIVELY ANCHORED BOLTS.

THE HOLD-DOWN PLATE SHALL CONFORM TO AASHTO M270 GRADE 36. AFTER FABRICATION, THE HOLD-DOWN PLATE SHALL BE HOT-DIP GALVANIZED IN ACCORDANCE WITH AASHTO M111.

BOLTS SHALL CONFORM TO THE REQUIREMENTS OF ASTM A307 AND NUTS SHALL CONFORM TO THE REQUIREMENTS OF AASHTO M291. BOLTS, NUTS AND WASHERS SHALL BE GALVANIZED. (AT THE CONTRACTOR'S OPTION, STAINLESS STEEL BOLTS, NUTS AND WASHERS MAY BE USED AS AN ALTERNATE FOR THE 7/8" Ø GALVANIZED BOLTS, NUTS AND WASHERS. THEY SHALL CONFORM TO OR EXCEED THE MECHANICAL REQUIREMENTS OF ASTM A307. THE USE OF THIS ALTERNATE SHALL BE APPROVED BY THE ENGINEER.)

THE GUARDRAIL ANCHOR ASSEMBLY IS REQUIRED AT ALL POINTS WHERE APPROACH GUARDRAIL IS TO BE ATTACHED TO THE END OF CONCRETE BARRIER RAIL OR CONCRETE END POSTS. FOR POINTS OF ATTACHMENT, SEE SKETCH.

AFTER INSTALLATION, THE EXPOSED THREAD OF THE BOLT SHALL BE BURRED WITH A SHARP POINTED TOOL.

THE COST OF THE GUARDRAIL ANCHOR ASSEMBLY SHALL BE INCLUDED IN THE UNIT CONTRACT PRICE BID FOR CONCRETE BARRIER RAIL.

THE 1 1/4" Ø HOLES SHALL BE FORMED OR DRILLED WITH A CORE BIT. IMPACT TOOLS WILL NOT BE PERMITTED. ANY CONCRETE DAMAGED BY THIS WORK SHALL BE REPAIRED TO THE SATISFACTION OF THE ENGINEER.

THE C6 X 8.2 RUBRAIL IS TO BE ADHESIVELY ANCHORED TO THE RAIL USING THREE 3/4" Ø X 6" BOLTS WITH WASHERS. LEVEL ONE FIELD TESTING IS REQUIRED, AND THE YIELD LOAD OF THE 3/4" Ø BOLT IS 12 KIPS. FOR ADHESIVELY ANCHORED ANCHOR BOLTS OR DOWELS, SEE SPECIAL PROVISIONS. SEE ROADWAY STANDARD 862.03 FOR DETAILS AND LOCATION OF THE RUBRAIL.

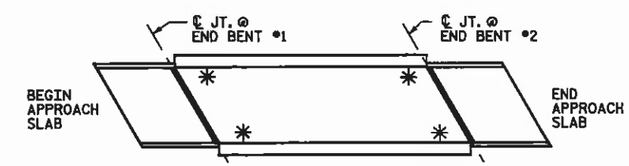

SKETCH SHOWING POINTS OF ATTACHMENT

✱ INDICATES POINTS OF ATTACHMENT

PROJECT NO. 42832
COUNTY: LINCOLN
STATION: 14+72.00
REPLACES BRIDGE NO. 29

STATE OF NORTH CAROLINA
DEPARTMENT OF TRANSPORTATION
RALEIGH

SUPERSTRUCTURE
GUARDRAIL ANCHORAGE
DETAILS

REVISIONS						SHEET NO.
NO.	BY	DATE	NO.	BY	DATE	6
1			3			TOTAL SHEETS
2			4			31

Florence & Hutcheson
CONSULTING ENGINEERS
5121 Kingdom Way, Suite 100 Raleigh, NC 27607
NC License No: F-0258

NORTH CAROLINA PROFESSIONAL SEAL 20532 JAMES E. MONDOLFI
12-7-10

NOT TO SCALE

DRAWN BY: K.M. MOBLEY DATE: JAN. 2010
CHECKED BY: J.E. MONDOLFI DATE: JAN. 2010

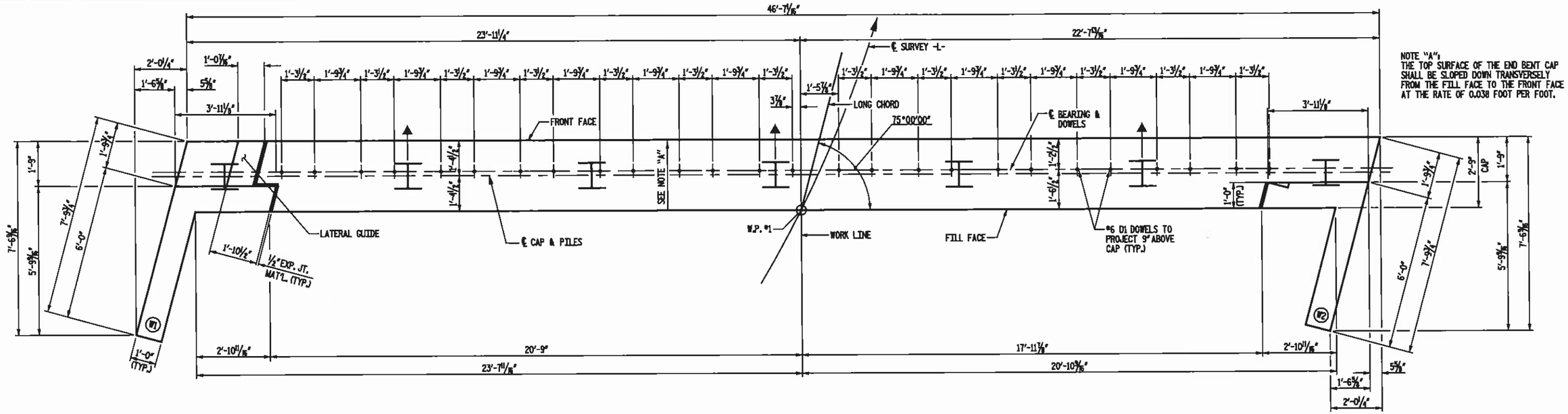

NOTE "A":
THE TOP SURFACE OF THE END BENT CAP SHALL BE SLOPED DOWN TRANSVERSELY FROM THE FILL FACE TO THE FRONT FACE AT THE RATE OF 0.038 FOOT PER FOOT.

PLAN

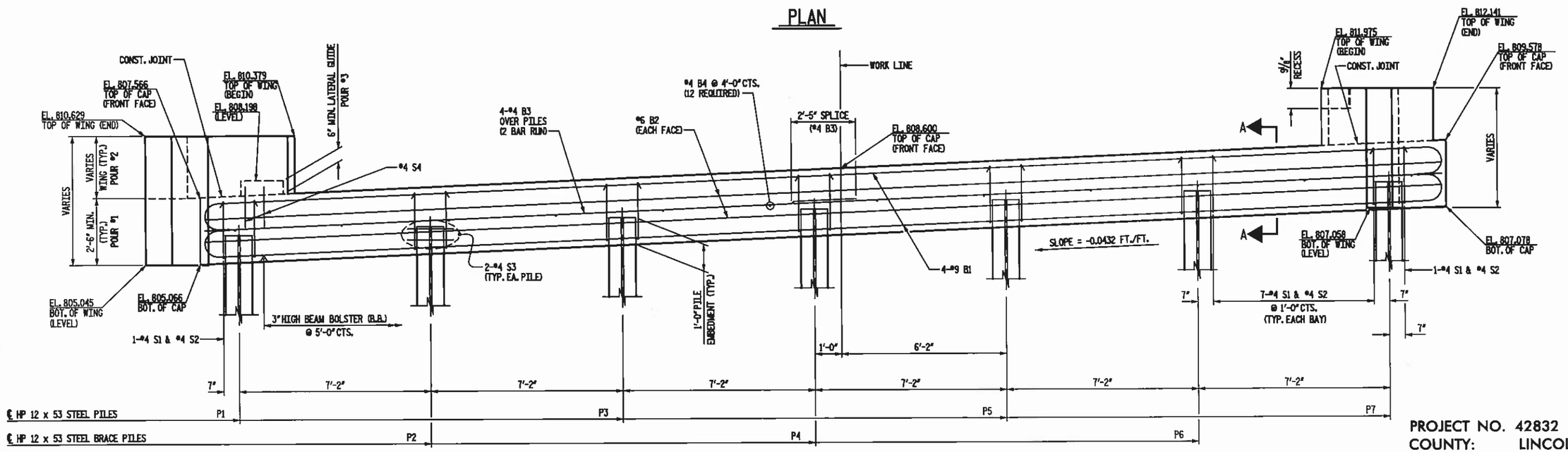

ELEVATION

TOP OF PILE ELEVATIONS	
PILE	ELEVATION
P1	806.150
P2	806.459
P3	806.769
P4	807.078
P5	807.388
P6	807.697
P7	808.007

NOTES:

STIRRUPS IN CAP MAY BE SHIFTED SLIGHTLY AS NECESSARY TO CLEAR DOWELS.

FOR SECTION A-A, SEE SHEET 9.

FOR DOWEL LOCATION DETAIL, PILE SPLICE DETAILS AND LATERAL GUIDE DETAILS, SEE SHEET 10.

INDICATES BRACE PILE (BATTER: 3:12)

NOT TO SCALE

PROJECT NO. 42832
COUNTY: LINCOLN
STATION: 14+72.00
REPLACES BRIDGE NO. 29

STATE OF NORTH CAROLINA
DEPARTMENT OF TRANSPORTATION
RALEIGH

CAST - IN - PLACE
END BENT NO. 1
40' SPAN WITH APPROACH SLABS
36' CLEAR ROADWAY - 75° SKEW

Florence & Hutcheson
CONSULTING ENGINEERS
5121 Kingdom Way, Suite 100 Raleigh, NC 27607
NC License No: F-0258

NORTH CAROLINA PROFESSIONAL SEAL 20532 JAMES E. MORGAN
12-7-10

REVISIONS						SHEET NO. 7
NO.	BY	DATE	NO.	BY	DATE	TOTAL SHEETS 31
1			3			
2			4			

DRAWN BY: K.M. MORLEY DATE: JAN. 2010
CHECKED BY: J.C. KO DATE: JAN. 2010

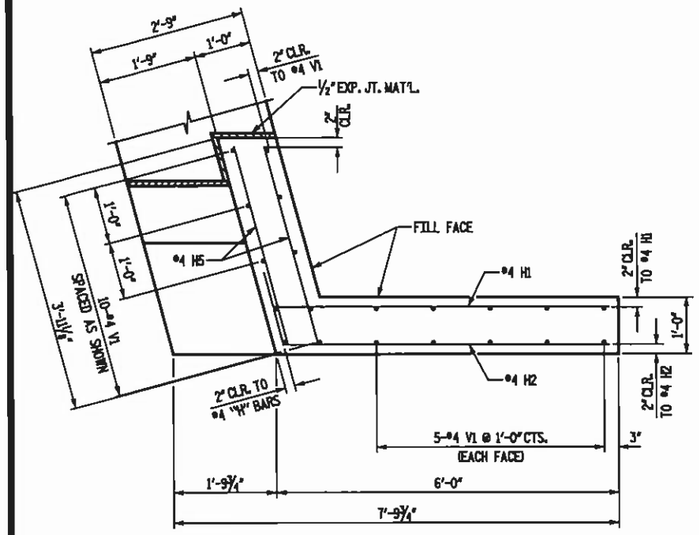

PLAN OF WING - W1

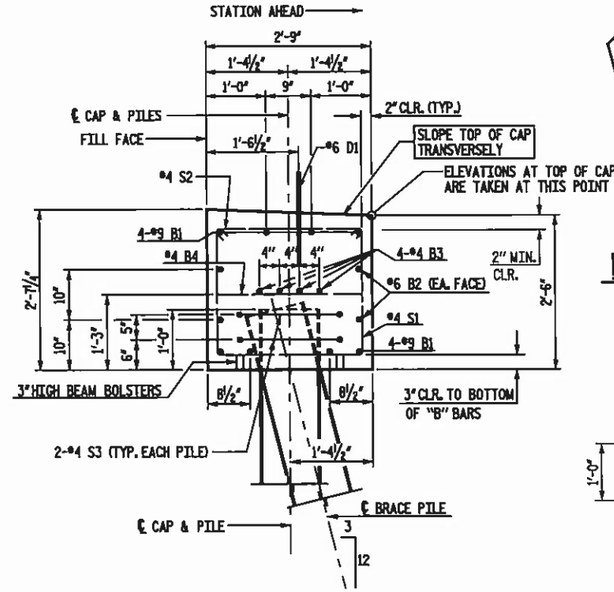

SECTION A-A

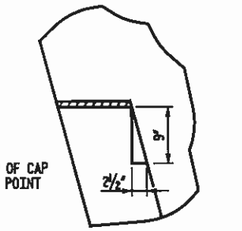

RECESS DETAIL

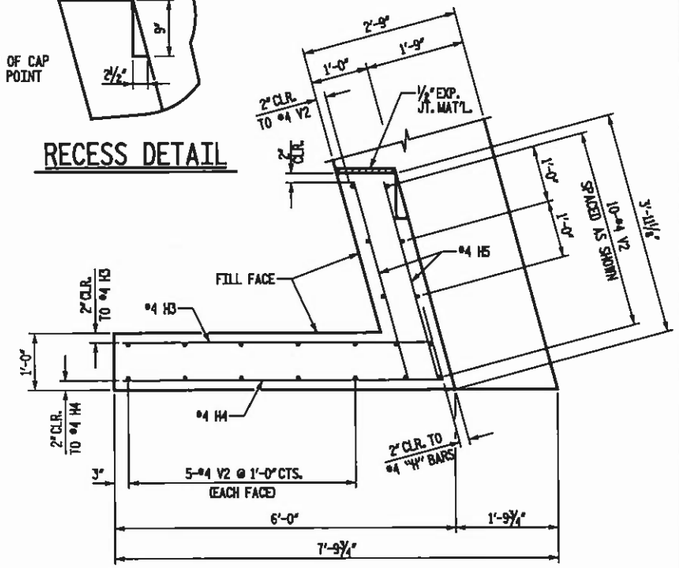

PLAN OF WING - W2

NOTE: SHIFT, FIELD BEND OR CUT REINFORCING STEEL AS NECESSARY TO CLEAR RECESS IN TOP OF BACKWALL.

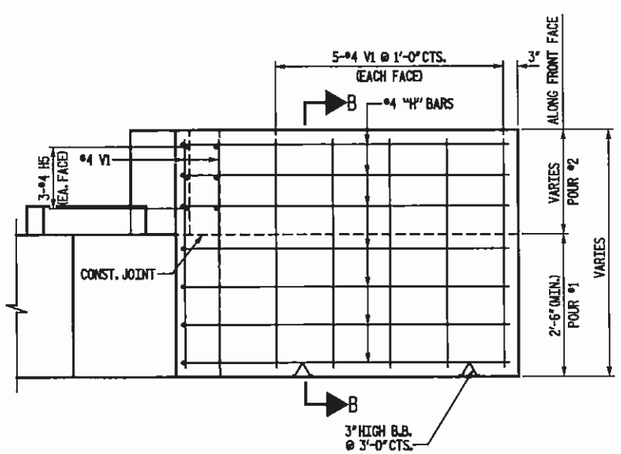

ELEVATION OF WING - W1

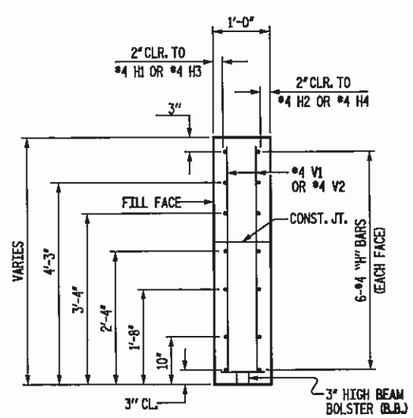

SECTION B-B

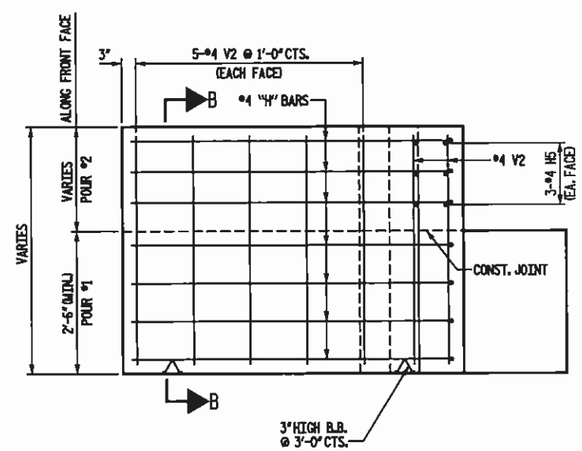

ELEVATION OF WING - W2

BILL OF MATERIAL

END BENT 1

BAR	NO.	SIZE	TYPE	LENGTH	WEIGHT
B1	8	9	1	48'-9"	1,326
B2	4	6	STR	46'-3"	278
B3	8	4	STR	24'-4"	130
B4	12	4	STR	2'-5"	19
D1	26	6	STR	1-6"	59
H1	7	4	6	6'-6"	30
H2	7	4	6	6'-4"	30
H3	7	4	7	6'-1"	28
H4	7	4	7	6'-3"	29
H5	12	4	STR	3'-6"	28
S1	44	4	3	7'-5"	218
S2	44	4	2	3'-2"	93
S3	14	4	5	6'-6"	61
S4	2	4	4	4'-5"	6
V1	20	4	STR	5'-0"	67
V2	20	4	STR	4'-7"	61
REINFORCING STEEL TOTAL					2,463 LBS.

CLASS "A" CONCRETE		
POUR 1	13.0	CYS.
POUR 2	1.9	CYS.
POUR 3	0.1	CYS.
TOTAL	15.0	CYS.

BAR TYPES

ALL BAR DIMENSIONS ARE OUT TO OUT

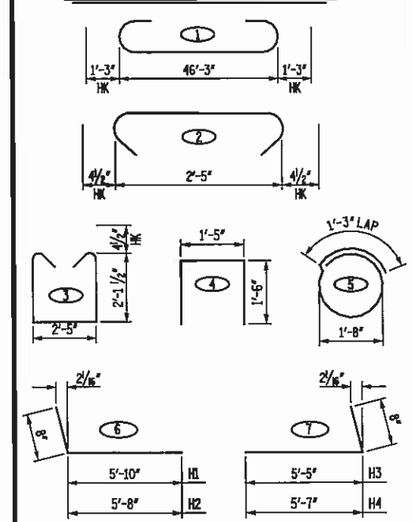

PROJECT NO. 42832
COUNTY: LINCOLN
STATION: 14+72.00
REPLACES BRIDGE NO. 29

STATE OF NORTH CAROLINA
DEPARTMENT OF TRANSPORTATION
RALEIGH

CAST - IN - PLACE
END BENT NO. 1 DETAILS

NOT TO SCALE

Florence & Hutcheson
CONSULTING ENGINEERS
5131 Kingdom Way, Suite 100 Raleigh, NC 27607
NC License No: F-0258

NORTH CAROLINA PROFESSIONAL SEAL 20532 JAMES E. MONDOR
12-7-10

REVISIONS						SHEET NO.
NO.	BY	DATE	NO.	BY	DATE	8
1			3			TOTAL SHEETS
2			4			31

DRAWN BY: K.M. MOBLEY DATE: JAN. 2010
CHECKED BY: J.C. KO DATE: JAN. 2010

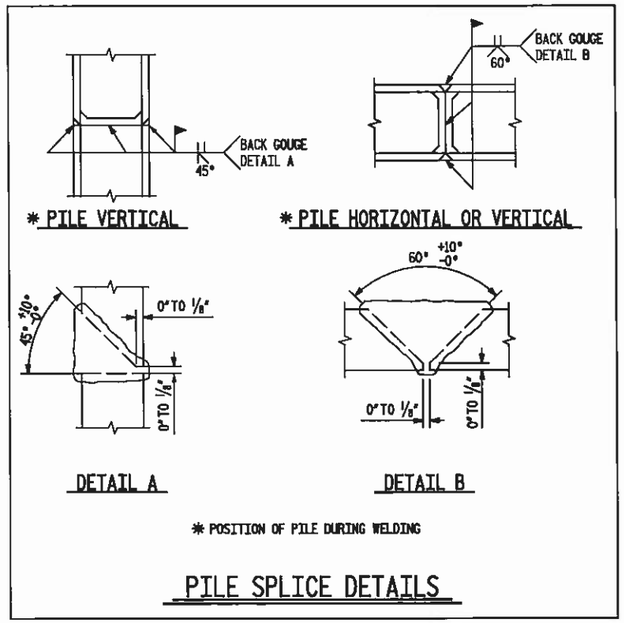

PILE SPLICE DETAILS

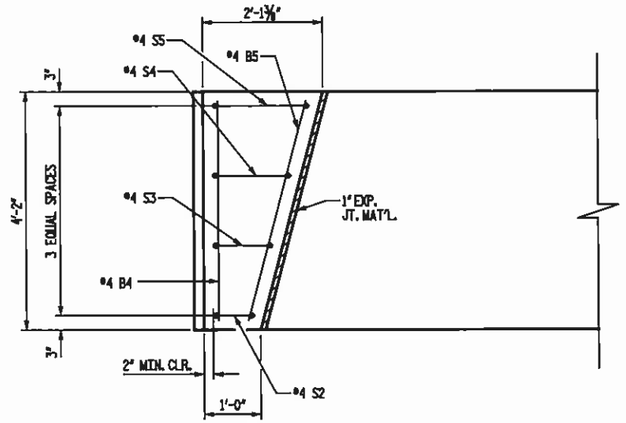

PLAN

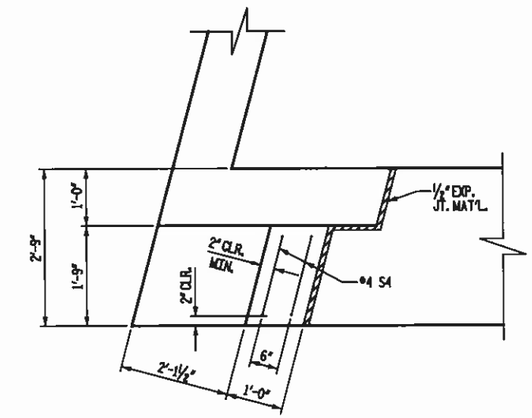

PLAN

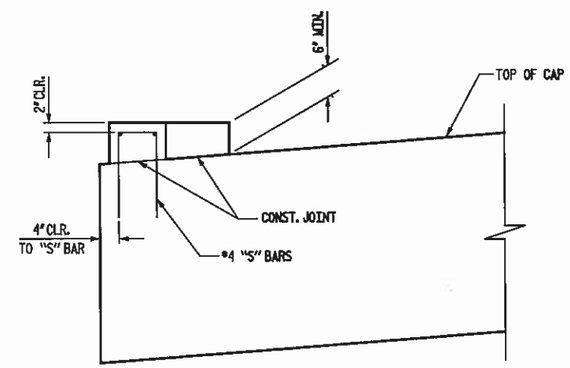

ELEVATION

INTERIOR BENT

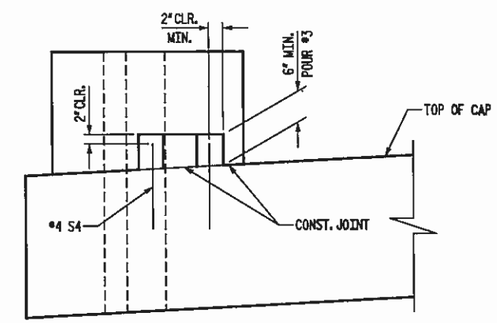

ELEVATION

END BENTS

LATERAL GUIDE DETAILS

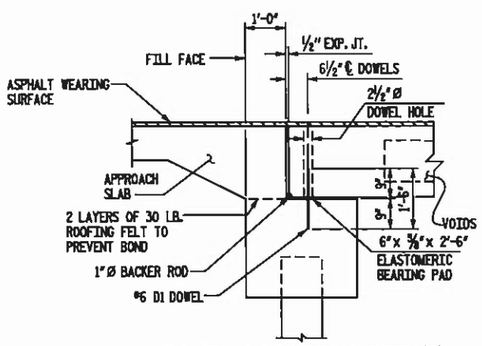

DOWEL LOCATION DETAIL

NOTE: ℄ OF DOWELS SHALL MATCH ℄ OF DOWEL HOLES IN CORED SLAB UNITS.

PROJECT NO. 42832
COUNTY: LINCOLN
STATION: 14+72.00
REPLACES BRIDGE NO. 29

STATE OF NORTH CAROLINA
DEPARTMENT OF TRANSPORTATION
RALEIGH

SUBSTRUCTURE
MISCELLANEOUS DETAILS

Florence & Hutcheson
CONSULTING ENGINEERS
5121 Kingdom Way, Suite 100 Raleigh, NC 27607
NC License No: F-0258

NORTH CAROLINA PROFESSIONAL SEAL 20532 ENGINEER JAMES E. MONDOCK
12-7-10

REVISIONS						SHEET NO.
NO.	BY	DATE	NO.	BY	DATE	9
1			3			TOTAL SHEETS
2			4			31

NOT TO SCALE

DRAWN BY: K.M. MOBLEY DATE: JAN. 2010
CHECKED BY: J.C. KO DATE: JAN. 2010

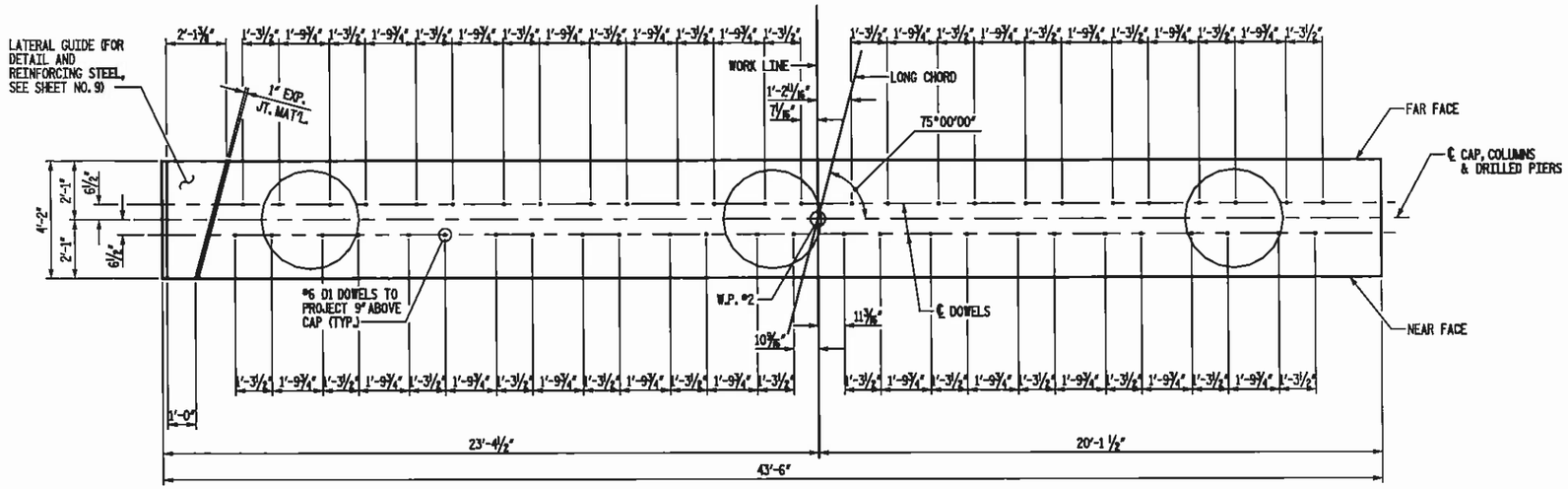

PLAN

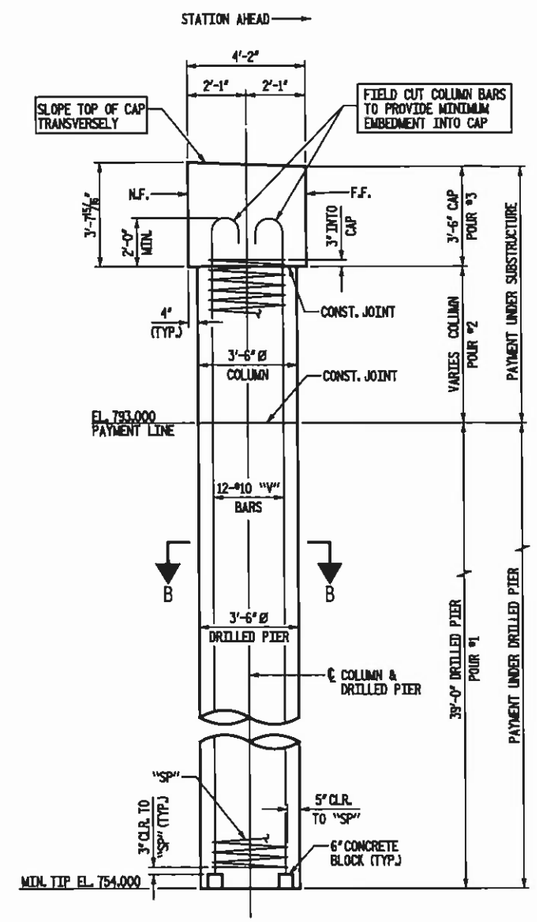

END ELEVATION

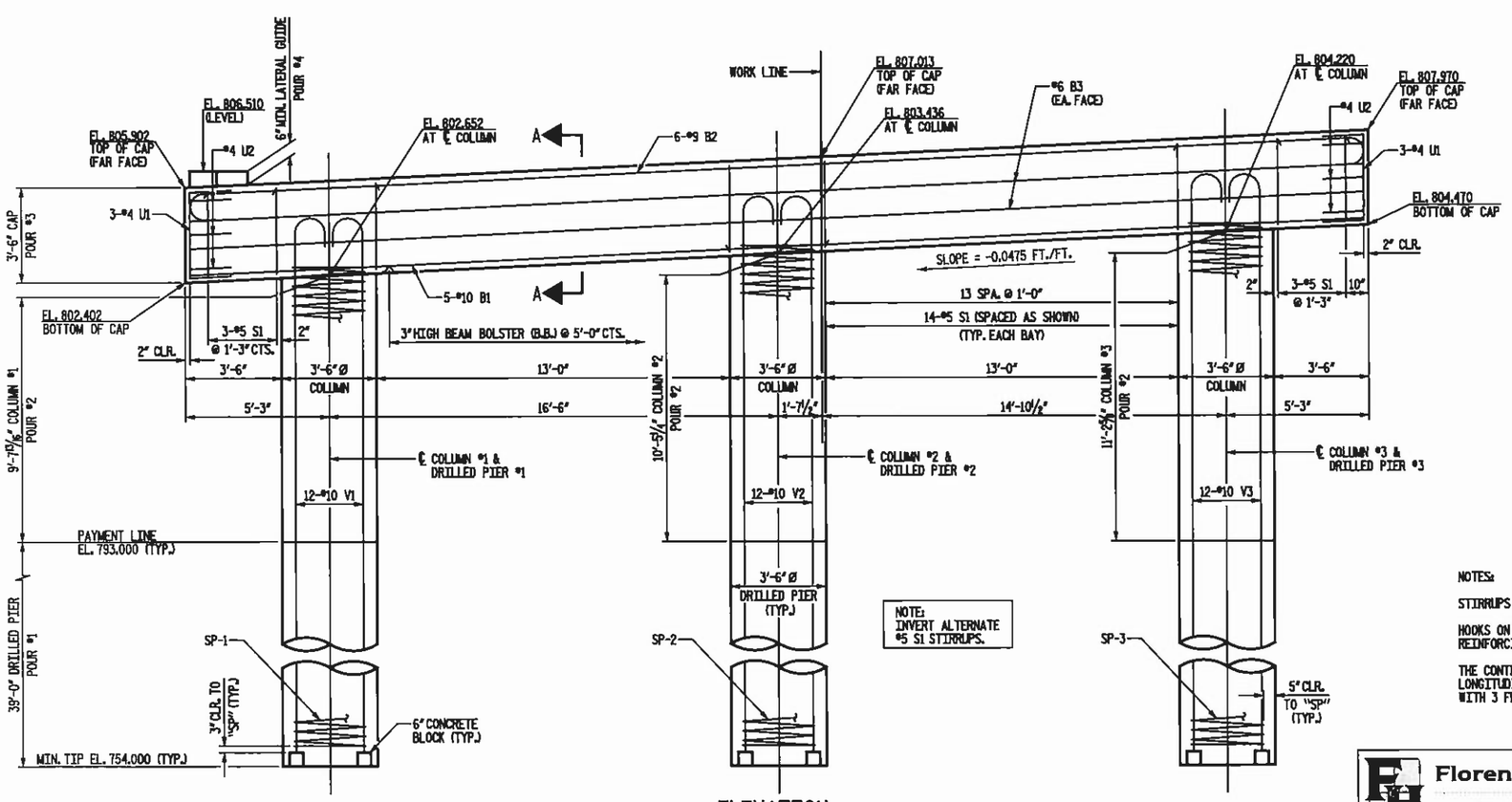

ELEVATION

NOTE:
INVERT ALTERNATE #5 S1 STIRRUPS.

NOTES:

STIRRUPS MAY BE SHIFTED SLIGHTLY AS NECESSARY TO CLEAR DOWELS.

HOOKS ON "V" BARS MAY BE TURNED AS NECESSARY FOR PLACING REINFORCING STEEL.

THE CONTRACTOR'S ATTENTION IS CALLED TO THE FACT THAT THE LONGITUDINAL REINFORCEMENT FOR THE DRILLED PIERS IS DETAILED WITH 3 FEET OF EXTRA LENGTH.

PROJECT NO. 42832
COUNTY: LINCOLN
STATION: 14+72.00
REPLACES BRIDGE NO. 29

STATE OF NORTH CAROLINA
DEPARTMENT OF TRANSPORTATION
RALEIGH

CAST - IN - PLACE
INTERIOR BENT #1

Florence & Hutcheson
CONSULTING ENGINEERS
5121 Kingdom Way, Suite 100 Raleigh, NC 27607
NC License No: F-0258

NORTH CAROLINA PROFESSIONAL SEAL 20532 JAMES E. MONDOR
12-7-10

REVISIONS						
NO.	BY	DATE	NO.	BY	DATE	
1			3			
2			4			

SHEET NO. 10
TOTAL SHEETS 31

DRAWN BY: K.M. MOBLEY DATE: JAN. 2010
CHECKED BY: J.C. KO DATE: JAN. 2010

NOT TO SCALE

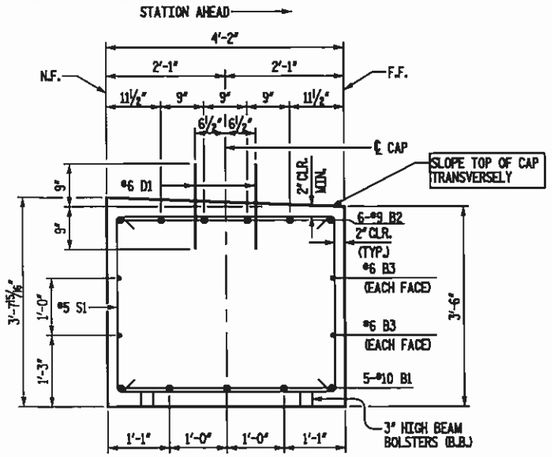

SECTION A-A

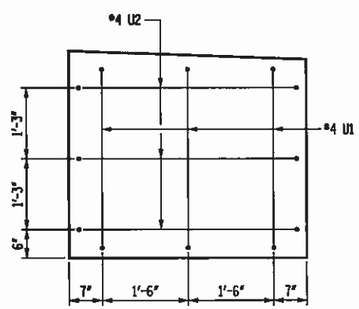

CAP END VIEW

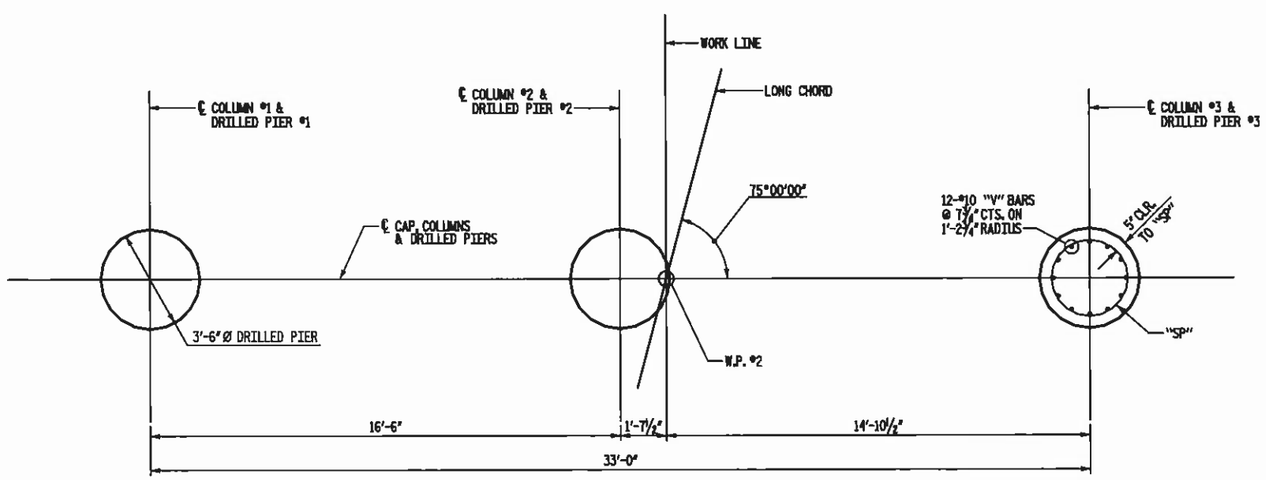

PLAN OF DRILLED PIERS

ALL DIMENSIONS AND DETAILS SHOWN FOR DRILLED PIERS ARE TYPICAL FOR EACH DRILLED PIER.

NOT TO SCALE

BAR TYPES

ALL BAR DIMENSIONS ARE OUT TO OUT.

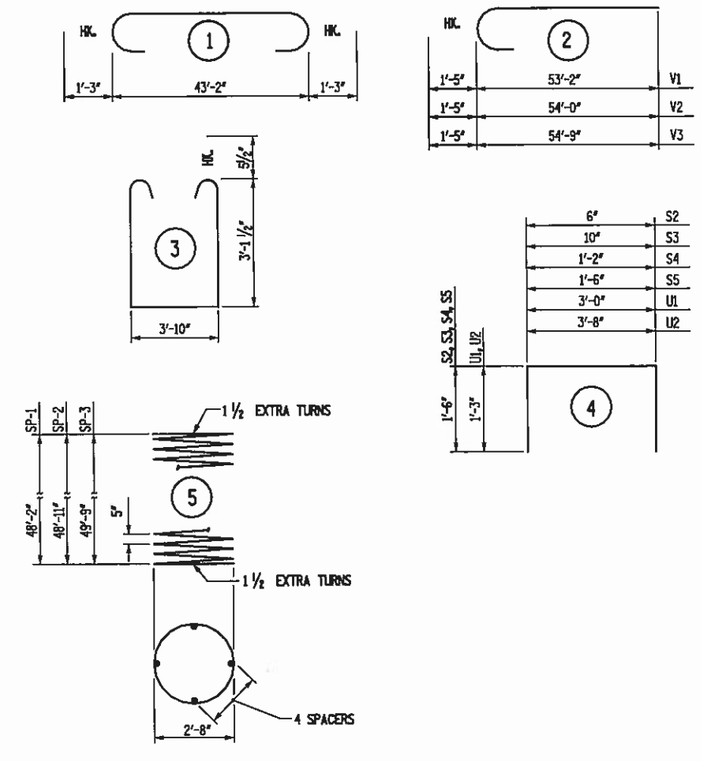

BILL OF MATERIAL

BENT #1

BAR	NO.	SIZE	TYPE	LENGTH	WEIGHT
B1	5	10	STR	43'-2"	929
B2	6	9	1	45'-8"	932
B3	4	6	STR	43'-2"	259
B4	1	4	STR	3'-10"	3
B5	1	4	STR	3'-11"	3
D1	52	6	STR	1'-6"	117
S1	34	5	3	11'-0"	390
S2	1	4	4	3'-6"	2
S3	1	4	4	3'-10"	3
S4	1	4	4	4'-2"	3
S5	1	4	4	4'-6"	3
U1	6	4	4	5'-6"	22
U2	6	4	4	6'-2"	25
V1	12	10	2	54'-7"	2,819
V2	12	10	2	55'-5"	2,862
V3	12	10	2	56'-2"	2,900

REINFORCING STEEL TOTAL 11,272 LB

SPIRAL COLUMN REINFORCING STEEL

BAR	NO.	SIZE	TYPE	LENGTH	WEIGHT
SP-1	1	**	5	1548'-8"	1615
SP-2	1	**	5	1609'-3"	1678
SP-3	1	**	5	1636'-8"	1707

SPIRAL COLUMN REINF. STEEL TOTAL 5,000 LB

CLASS A CONCRETE BREAKDOWN

POUR #2 COLUMN	11.2	CY
POUR #3 CAP	24.0	CY
POUR #4 LATERAL GUIDE	0.1	CY
TOTAL	35.3	CY

DRILLED PIERS

DRILLED PIER CONCRETE

POUR #1 DRILLED PIER	41.7	CY
42" Ø DRILLED PIER IN SOIL	84.0	LF
42" Ø DRILLED PIER NOT IN SOIL	33.0	LF
42" Ø PERMANENT STEEL CASING	75.0	LF

** NOTE: THE SP-1, SP-2, SP-3 SPIRAL REINFORCING STEEL SHALL BE W31 OR D-31 COLD DRAWN WIRE OR #5 PLAIN OR DEFORMED BAR.

PROJECT NO. 42832
COUNTY: LINCOLN
STATION: 14+72.00
REPLACES BRIDGE NO. 29

STATE OF NORTH CAROLINA
DEPARTMENT OF TRANSPORTATION
RALEIGH

CAST - IN - PLACE
INTERIOR BENT #1

Florence & Hutcheson
CONSULTING ENGINEERS
5121 Kingdom Way, Suite 100 Raleigh, NC 27607
NC License No: F-0258

NORTH CAROLINA PROFESSIONAL SEAL 20532 JAMES E. MONDO
12-7-10

REVISIONS							
NO.	BY	DATE	NO.	BY	DATE	SHEET NO. 11	
1			3			TOTAL SHEETS 31	
2			4				

DRAWN BY: K.M. MORLEY DATE: JAN. 2010
CHECKED BY: J.C. KO DATE: JAN. 2010

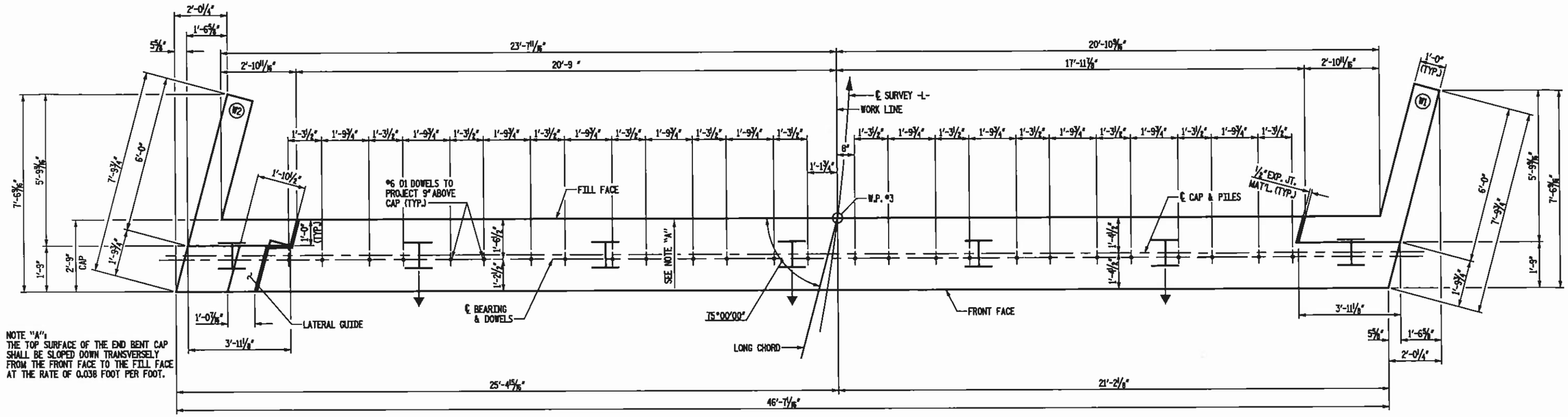

NOTE "A":
THE TOP SURFACE OF THE END BENT CAP SHALL BE SLOPED DOWN TRANSVERSELY FROM THE FRONT FACE TO THE FILL FACE AT THE RATE OF 0.036 FOOT PER FOOT.

PLAN

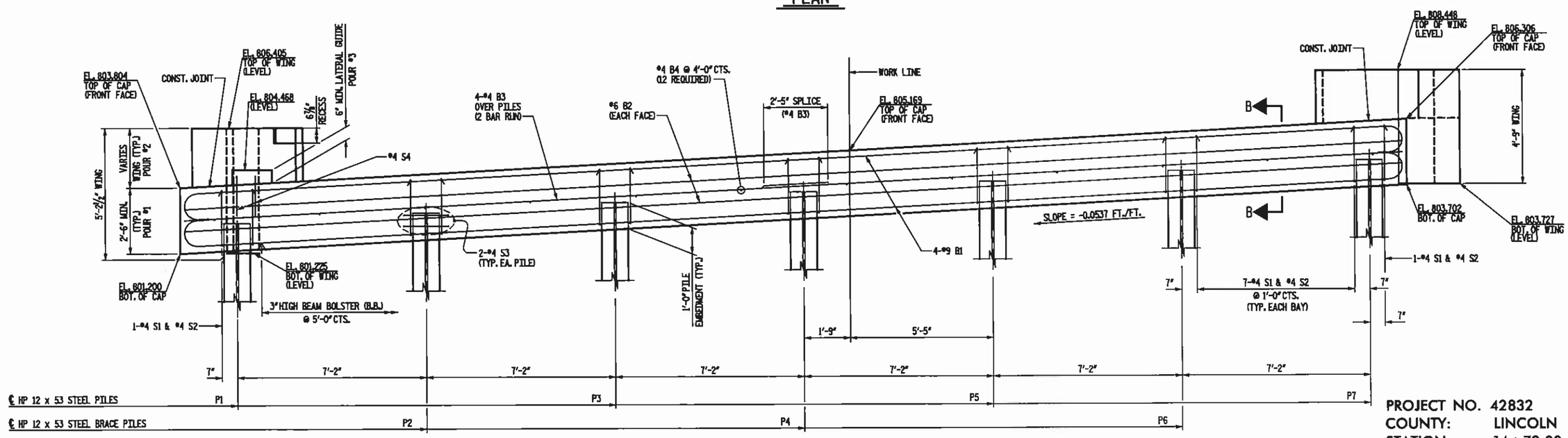

ELEVATION

TOP OF PILE ELEVATIONS	
PILE	ELEVATION
P1	802.343
P2	802.728
P3	803.113
P4	803.498
P5	803.882
P6	804.267
P7	804.652

NOTES:

STIRRUPS IN CAP MAY BE SHIFTED SLIGHTLY AS NECESSARY TO CLEAR DOWELS.

FOR DOWEL LOCATION DETAIL, PILE SPLICE DETAILS AND LATERAL GUIDE DETAILS, SEE SHEET 9.

FOR SECTION B-B, SEE SHEET 13.

INDICATES BRACE PILE (BATTER: 3:12)

NOT TO SCALE

PROJECT NO. 42832
COUNTY: LINCOLN
STATION: 14+72.00
REPLACES BRIDGE NO. 29

STATE OF NORTH CAROLINA
DEPARTMENT OF TRANSPORTATION
RALEIGH

CAST - IN - PLACE
END BENT NO. 2

Florence & Hutcheson
CONSULTING ENGINEERS
5121 Kingdomia Way, Suite 100 Raleigh, NC 27607
NC License No: F-0258

NORTH CAROLINA PROFESSIONAL SEAL 20527 ENGINEER JAMES E. MONDOLI
12-7-10

REVISIONS						SHEET NO.
NO.	BY	DATE	NO.	BY	DATE	12
1			3			TOTAL SHEETS
2			4			31

DRAWN BY: K.M. MOBLEY DATE: JAN. 2010
CHECKED BY: J.C. KO DATE: JAN. 2010

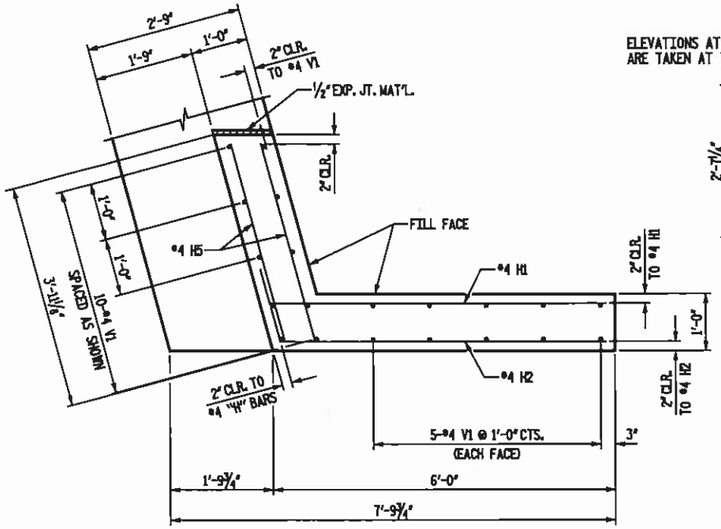

PLAN OF WING - W1

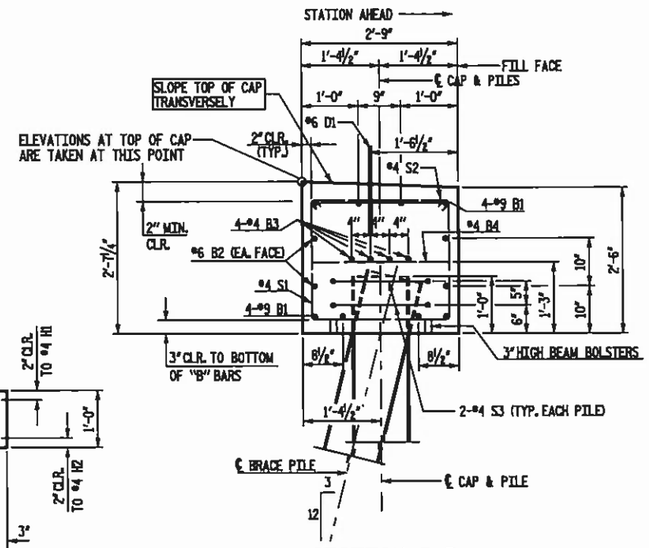

SECTION B-B

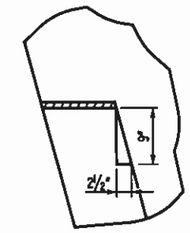

RECESS DETAIL

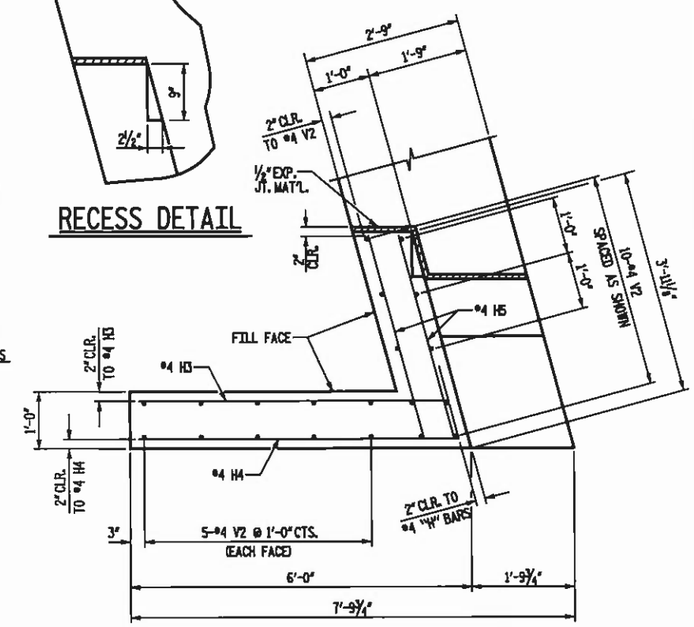

PLAN OF WING - W2

NOTE: SHIFT, FIELD BEND OR CUT REINFORCING STEEL AS NECESSARY TO CLEAR RECESS IN TOP OF BACKWALL.

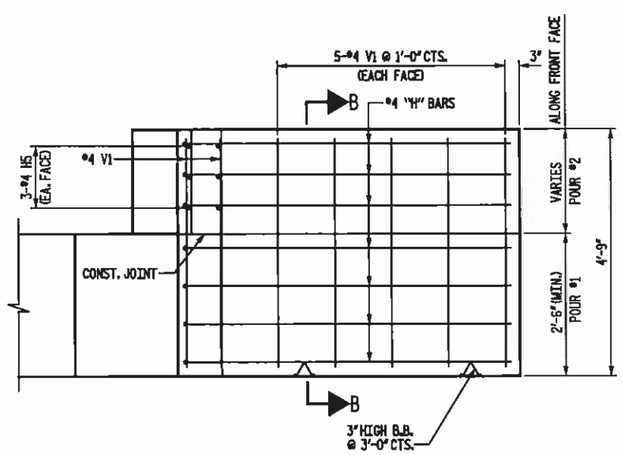

ELEVATION OF WING - W1

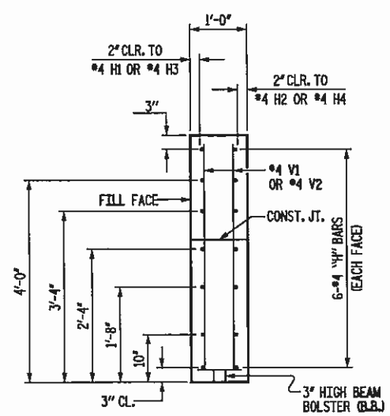

SECTION B-B

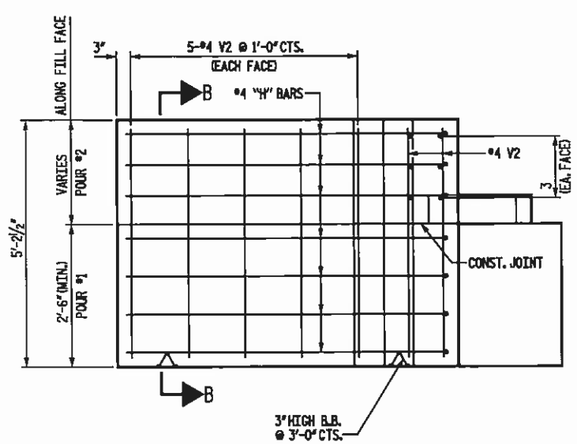

ELEVATION OF WING - W2

BILL OF MATERIAL
END BENT 2

BAR	NO.	SIZE	TYPE	LENGTH	WEIGHT
B1	8	9	1	48'-9"	1,326
B2	4	6	STR	46'-3"	278
B3	8	4	STR	24'-4"	130
B4	12	4	STR	2'-5"	19
D1	26	6	STR	1-6"	59
H1	7	4	6	6'-6"	30
H2	7	4	6	6'-4"	30
H3	7	4	7	6'-1"	28
H4	7	4	7	6'-3"	29
H5	12	4	STR	3'-6"	28
S1	44	4	3	7'-5"	218
S2	44	4	2	3'-2"	93
S3	14	4	5	6'-6"	61
S4	2	4	4	4'-5"	6
V1	20	4	STR	4'-10"	65
V2	20	4	STR	4'-3"	59
REINFORCING STEEL TOTAL					2,459 LBS.

CLASS "A" CONCRETE		
POUR 1	13.0	CYS.
POUR 2	1.6	CYS.
POUR 3	0.1	CYS.
TOTAL	14.7	CYS.

BAR TYPES

ALL BAR DIMENSIONS ARE OUT TO OUT

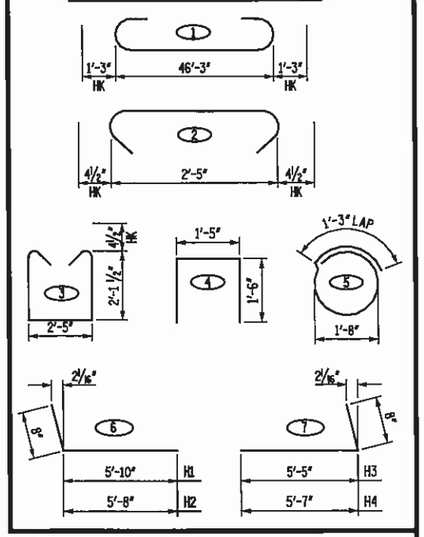

PROJECT NO. 42832
COUNTY: LINCOLN
STATION: 14+72.00
REPLACES BRIDGE NO. 29

STATE OF NORTH CAROLINA
DEPARTMENT OF TRANSPORTATION
RALEIGH

CAST - IN - PLACE
END BENT NO. 2 DETAILS

NOT TO SCALE

Florence & Hutcheson
CONSULTING ENGINEERS
5121 Kingdom Way, Suite 100 Raleigh, NC 27607
NC License No: F-0256

NORTH CAROLINA PROFESSIONAL SEAL 29537 ENGINEER JAMES E. HONDOROS
12-7-10

REVISIONS						SHEET NO.
NO.	BY	DATE	NO.	BY	DATE	13
1			3			TOTAL SHEETS
2			4			31

DRAWN BY: K.M. MOBLEY DATE: JAN. 2010
CHECKED BY: J.C. KO DATE: JAN. 2010

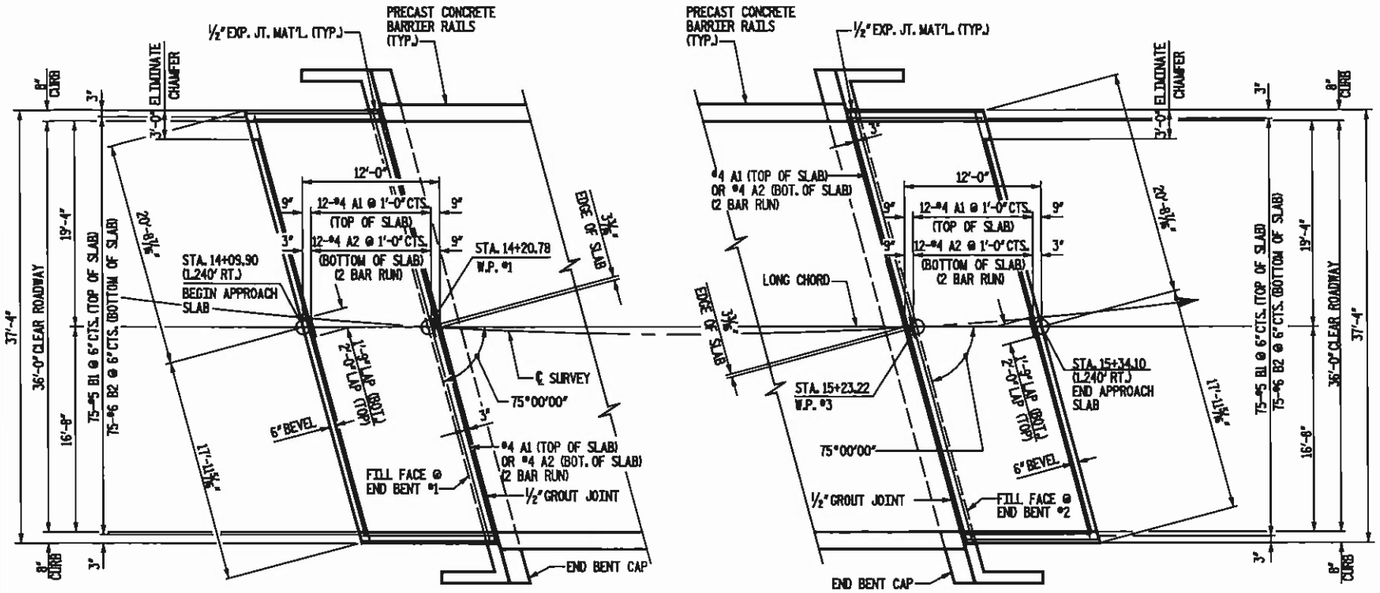

PLAN OF APPROACH SLABS

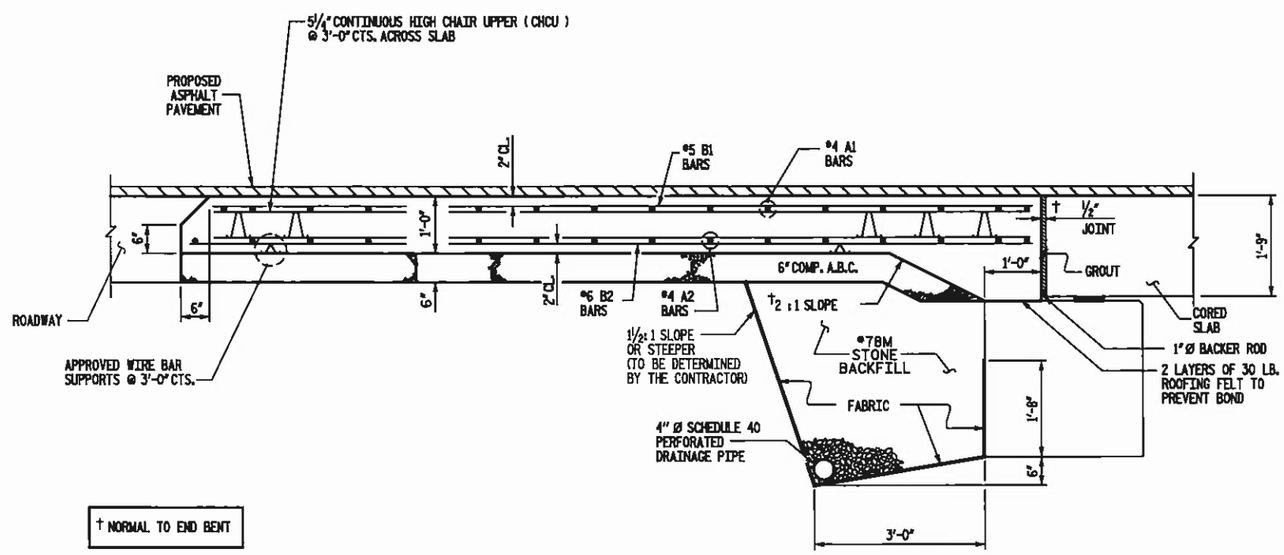

SECTION THRU SLAB

NOTES

FOR BRIDGE APPROACH FILL INCLUDING FABRIC, 4" Ø DRAINAGE PIPE, AND #78M STONE BACKFILL, SEE BRIDGE APPROACH FILLS, SHEET 16.

APPROACH SLAB SHALL NOT BE CONSTRUCTED PRIOR TO INSTALLATION OF CORED SLAB.

FABRIC SHALL BE TYPE 1 ENGINEERING FABRIC IN ACCORDANCE WITH THE STANDARD SPECIFICATIONS SECTION 1056.

#78M STONE BACKFILL (CLASS V SELECT MATERIAL) SHALL BE IN ACCORDANCE WITH STANDARD SPECIFICATIONS SECTION 1016.

#78M STONE BACKFILL IS TO BE CONTINUOUS ALONG FILL FACE OF END BENT CAP FROM OUTSIDE EDGE TO OUTSIDE EDGE OF APPROACH SLAB.

FOR THE 4" Ø DRAINAGE PIPE OUTLET(S), SEE BRIDGE APPROACH FILLS, SHEET 16.

AREA BETWEEN THE WINGWALL AND APPROACH SLAB SHALL BE GRADED TO DRAIN THE WATER AWAY FROM THE FILL FACE OF THE BRIDGE AND SHALL BE PAVED.

THE 6" COMP. A.B.C. SHALL BE FLUSH WITH THE ROADWAY END OF THE APPROACH SLAB AND SHALL EXTEND 1'-0" OUTSIDE OF EACH EDGE OF THE APPROACH SLAB.

THE CONTRACTOR MAY USE 4" TYPE B-25.0B ASPHALT CONCRETE BASE COURSE IN LIEU OF 6" COMP. A.B.C. IF THIS OPTION IS USED, THE BASE COURSE SHALL BE FLUSH WITH THE ROADWAY END OF THE APPROACH SLAB, AND THE WIDTH SHALL BE THE SAME AS THAT OF THE APPROACH SLAB.

THE CONTRACTOR MAY USE 5" CLASS "A" CONCRETE BASE IN LIEU OF 6" COMP. A.B.C. IF THIS OPTION IS USED, THE CONCRETE BASE SHALL BE FLUSH WITH THE ROADWAY END OF THE APPROACH SLAB, AND THE WIDTH SHALL BE THE SAME AS THAT OF THE APPROACH SLAB. THE CONCRETE SHALL BE FINISHED TO A SMOOTH SURFACE AND A LAYER OF 30 LB ROOFING FELT SHALL BE PLACED BETWEEN THE CONCRETE BASE AND THE APPROACH SLAB TO PREVENT BOND. THE APPROACH SLAB SHALL NOT BE CAST UNTIL THE CONCRETE BASE HAS REACHED AN AGE OF THREE CURING DAYS.

FOR JOINT DETAILS, SEE "PRESTRESSED CONCRETE CORED SLAB UNIT" SHEETS.

THE JOINT AT THE END BENT SHALL BE GROUTED AS SOON AS PRACTICAL AFTER THE CONSTRUCTION OF THE APPROACH SLABS.

APPROACH SLAB GROOVING IS NOT REQUIRED.

BILL OF MATERIAL

FOR ONE APPROACH SLAB (2 REQUIRED)

BAR	NO.	SIZE	TYPE	LENGTH	WEIGHT
* A1	26	#4	STR	20'-2"	350
A2	26	#4	STR	20'-0"	347
* B1	75	#5	STR	11'-1"	867
B2	75	#6	STR	11'-7"	1305
REINFORCING STEEL				LBS.	1,618
* EPOXY COATED REINFORCING STEEL				LBS.	2,876
CLASS AA CONCRETE				C. Y.	18.6

PROJECT NO. 42832
COUNTY: LINCOLN
STATION: 14+72.00
REPLACES BRIDGE NO. 29

STATE OF NORTH CAROLINA
DEPARTMENT OF TRANSPORTATION
RALEIGH

APPROACH SLAB
36'-0" CLEAR ROADWAY
75° SKEW

NOT TO SCALE

Florence & Hutcheson
CONSULTING ENGINEERS
5121 Kingdom Way, Suite 100 Raleigh, NC 27607
NC License No. F-0368

NORTH CAROLINA PROFESSIONAL SEAL 20532 JAMES E. MONDOLFI
12-7-10

REVISIONS						SHEET NO.
NO.	BY	DATE	NO.	BY	DATE	14
1			3			TOTAL SHEETS
2			4			31

DRAWN BY: K.M. MOBLEY DATE: JAN. 2010
CHECKED BY: J.E. MONDOLFI DATE: JAN. 2010

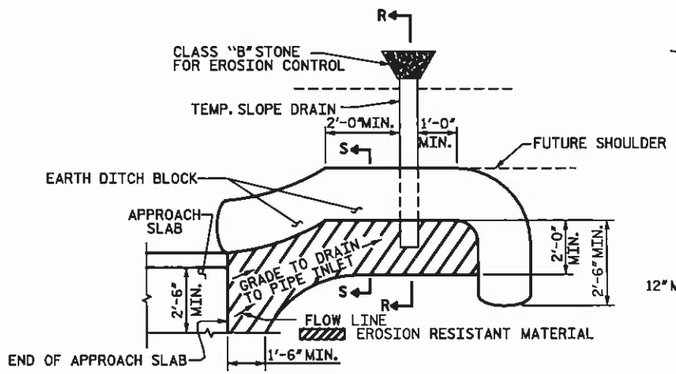

NOTE: IMMEDIATELY AFTER THE CONSTRUCTION OF THE APPROACH SLAB, THE CONTRACTOR SHALL PROVIDE TEMPORARY BERM AND SLOPE DRAIN. CONTRACTOR SHALL GRADE TO PIPE INLET AND PROVIDE EROSION RESISTANT MATERIAL AS SHOWN. THE EROSION RESISTANT MATERIAL SHALL BE EITHER 1) ASPHALT PLANT MIX, TYPE 1 OR TYPE 2, MIN. 2" DEPTH, 2) EROSION CONTROL MAT, OR 3) CONCRETE, AS DIRECTED BY THE ENGINEER. THE SLOPE DRAIN SHALL CONSIST OF A NON-PERFORATED TEMPORARY DRAINAGE PIPE, 12 INCHES IN DIAMETER.

PLAN VIEW

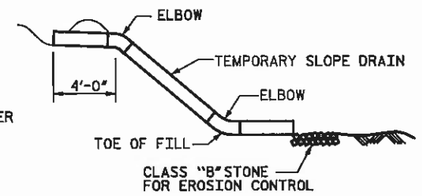

SECTION R-R

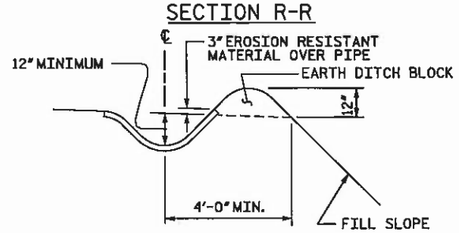

SECTION S-S

TEMPORARY BERM AND SLOPE DRAIN DETAILS

(TO BE USED WHEN SHOULDER BERM GUTTER IS REQUIRED)

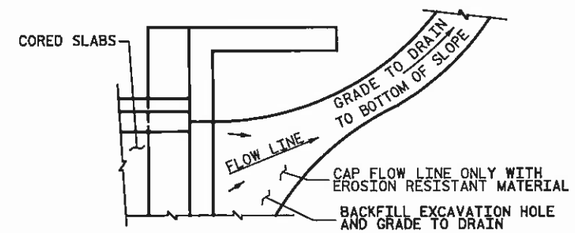

NOTE: IF THE APPROACH SLAB IS NOT CONSTRUCTED IMMEDIATELY AFTER THE BACKFILLING OF THE END BENT EXCAVATION, GRADE TO DRAIN TO THE BOTTOM OF THE SLOPE AND PROVIDE EROSION RESISTANT MATERIAL, SUCH AS FIBERGLASS ROVING OR AS DIRECTED BY THE ENGINEER TO PREVENT SOIL EROSION AND TO PROTECT THE AREA ADJACENT TO THE STRUCTURE. THE CONTRACTOR WILL BE REQUIRED TO REMOVE THESE MATERIALS PRIOR TO CONSTRUCTION OF THE APPROACH SLAB.

TEMPORARY DRAINAGE DETAIL

PROJECT NO. 42832
COUNTY: LINCOLN
STATION: 14+72.00
REPLACES BRIDGE NO. 29

STATE OF NORTH CAROLINA
DEPARTMENT OF TRANSPORTATION
RALEIGH

APPROACH SLAB
36'-0" CLEAR ROADWAY
75° SKEW

NOT TO SCALE

Florence & Hutcheson
CONSULTING ENGINEERS
8121 Kingdom Way, Suite 100 Raleigh, NC 27607
NC License No: F-0258

NORTH CAROLINA PROFESSIONAL SEAL 20537 ENGINEER JAMES E. MONDOLFI
12-7-10

REVISIONS						SHEET NO.
NO.	BY	DATE	NO.	BY	DATE	15
1			3			TOTAL SHEETS
2			4			31

DRAWN BY: K.M. MORLEY DATE: JAN. 2010
CHECKED BY: J.E. MONDOLFI DATE: JAN. 2010

PROJECT REFERENCE NO.	SHEET NO.
B-5230	16

STATE OF NORTH CAROLINA DEPT. OF TRANSPORTATION DIVISION OF HIGHWAYS RALEIGH, N.C.

ENGLISH DETAIL DRAWING FOR
BRIDGE APPROACH FILLS
CORED SLAB & BOX BEAM BRIDGES
SUB REGIONAL TIER

SHEET 1 OF 2
422D11

STATE OF NORTH CAROLINA DEPT. OF TRANSPORTATION DIVISION OF HIGHWAYS RALEIGH, N.C.

ENGLISH DETAIL DRAWING FOR
BRIDGE APPROACH FILLS
CORED SLAB & BOX BEAM BRIDGES
SUB REGIONAL TIER

SHEET 2 OF 2
422D11

PROJECT SERVICES UNIT
STANDARDS AND SPECIAL DESIGN
Office 919-250-4128 FAX 919-250-4119

BRIDGE APPROACH FILLS
CORED SLAB & BOX BEAM BRIDGES
SUB REGIONAL TIER

ORIGINAL BY: K. A. Kempt DATE: 6-10-08
MODIFIED BY: DATE:
CHECKED BY: DATE: 6/27/08
FILE SPEC.: kkempt\english\bridge approach fills.dgn

7:41PM JUN 20CH 16:32
kkempt

8/17/99

DATUM DESCRIPTION

THE LOCALIZED COORDINATE SYSTEM DEVELOPED FOR THIS PROJECT IS BASED ON THE STATE PLANE COORDINATES ESTABLISHED BY NCDOT FOR MONUMENT "BL-2"
WITH NAD 83 STATE PLANE GRID COORDINATES OF NORTHING: 629477.4978111 EASTING: 1303804.0853111
THE AVERAGE COMBINED GRID FACTOR USED ON THIS PROJECT (GROUND TO GRID) IS: 0.9998237039
THE N.C. LAMBERT GRID BEARING AND LOCALIZED HORIZONTAL GROUND DISTANCE FROM "BL-2" TO -L- STATION 10+75.00 IS
N 85° 45' 17.1" E 127.73'
ALL LINEAR DIMENSIONS ARE LOCALIZED HORIZONTAL DISTANCES
VERTICAL DATUM USED IS NAVD 88

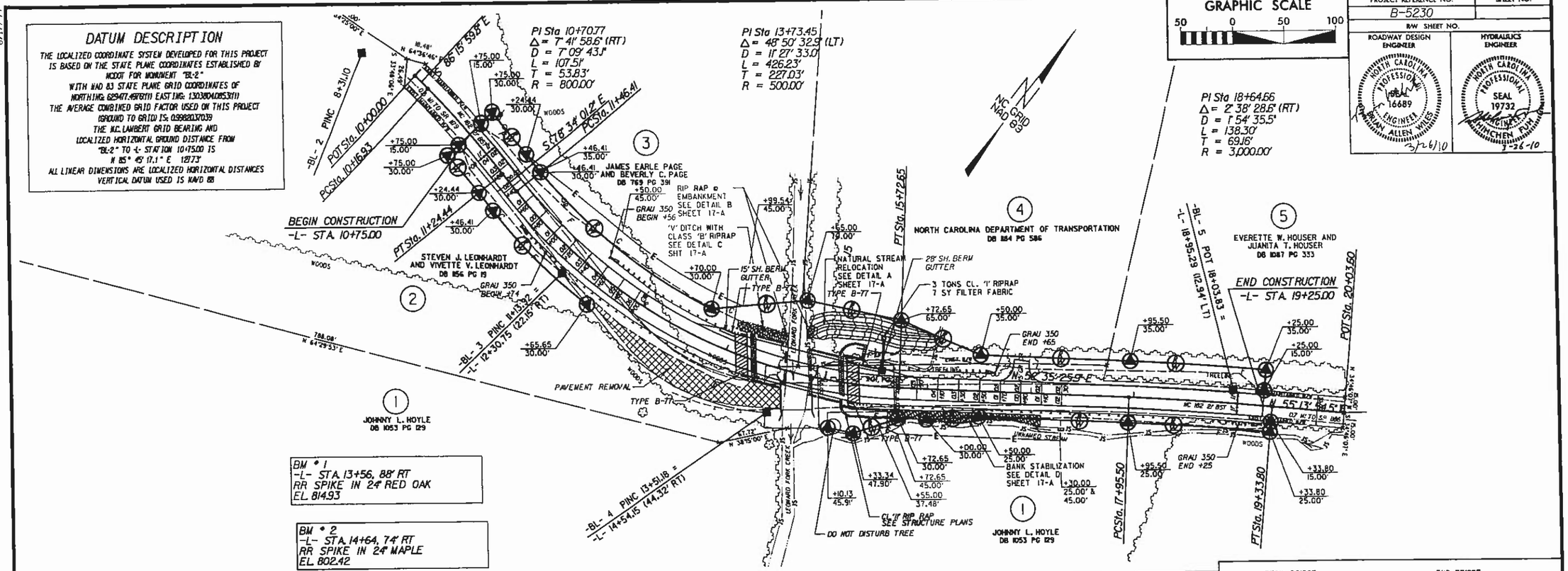

PROJECT REFERENCE NO.	SHEET NO.
B-5230	
R/W SHEET NO.	

ROADWAY DESIGN ENGINEER: NORTH CAROLINA PROFESSIONAL SEAL 16689 ENGINEER — DARRYL ALLEN WILLIS — 3/26/10

HYDRAULICS ENGINEER: NORTH CAROLINA PROFESSIONAL SEAL 19732 ENGINEER — MINCHEN FUH — 3-26-10

RIGHT OF WAY AREA DATA

PARCEL NO.	PROPERTY OWNERS NAME	TOTAL ACREAGE	AREA TAKEN	CONSTR. EASEMENT	PERMANENT DRAINAGE EASEMENT	TEMPORARY DRAINAGE EASEMENT
1	JOHNNY L. HOYLE		0.10 AC	3,030 S.F.		
2	STEVEN J. & VIVETTE V. LEONHARDT		2,310 S.F.			
3	JAMES EARLE & BEVERLY C. PAGE		0.32 AC	3,040 S.F.		
4	NORTH CAROLINA DEPT. OF TRANSPORTATION		0.18 AC			
5	EVERETTE W. & JUANITA T. HOUSER		3,080 S.F.			

PROJECT NO. 42832
COUNTY: LINCOLN
STATION: 14+72.00
REPLACES BRIDGE NO. 29

STATE OF NORTH CAROLINA
DEPARTMENT OF TRANSPORTATION
RALEIGH

BRIDGE #29 ON NC 182 OVER LEONARD FORK CREEK

Florence & Hutcheson
CONSULTING ENGINEERS
5121 Kingdom Way, Suite 100 Raleigh, NC 27607
NC Licenses No. F-0266

REVISIONS							
NO.	BY	DATE	NO.	BY	DATE	SHEET 17 OF 31
1			3			
2			4			

3/26/2010
F:\Kingdom\Projects\mn12662b psh.dgn
Florence & Hutcheson, Inc.

PROJECT REFERENCE NO.	SHEET NO.
B-5230	
R/W SHEET NO.	
ROADWAY DESIGN ENGINEER	HYDRAULICS ENGINEER

NORTH CAROLINA PROFESSIONAL SEAL 16689 ENGINEER BRIAN ALLEN WILES 3/26/10

NORTH CAROLINA PROFESSIONAL SEAL 19732 ENGINEER YUNCHEN RUN 3-26-10

PAVEMENT SCHEDULE	
C	3" SURFACE COURSE, TYPE S9.5B
D	2½" INTERMEDIATE COURSE, TYPE I19.0B
E	4½" BASE COURSE, TYPE B25.0B
T	EARTH MATERIAL

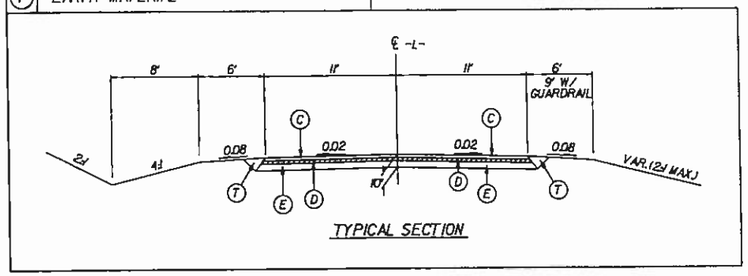

TYPICAL SECTION

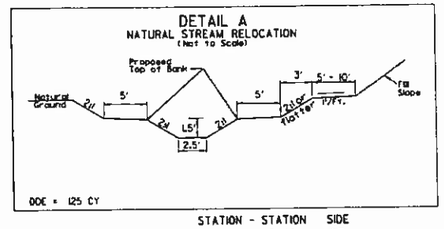

STATION - STATION	SIDE
14+80 - 16+10	LT

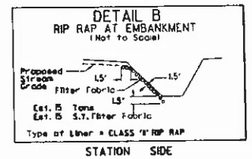

STATION	SIDE
14+55	LT
14+75	LT

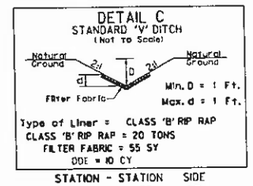

STATION - STATION	SIDE
14+00 - 14+53	LT

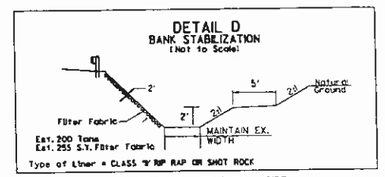

STATION - STATION	SIDE
15+65 - 17+10	RT

DETAIL OF NATURAL STREAM RELOCATION (PLAN VIEW)

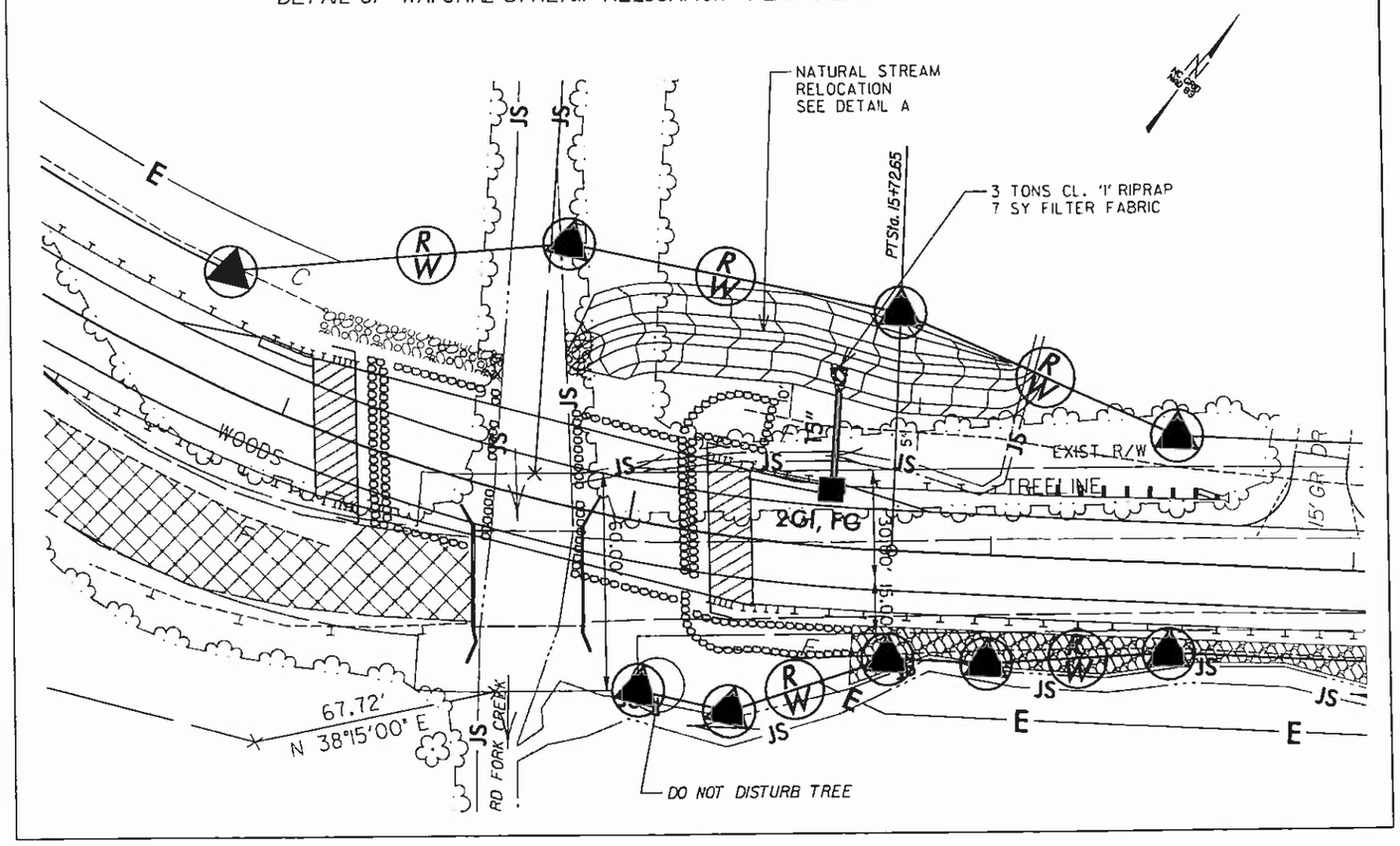

PROJECT NO.	42832
COUNTY:	LINCOLN
STATION:	14+72.00
REPLACES BRIDGE NO. 29	

STATE OF NORTH CAROLINA
DEPARTMENT OF TRANSPORTATION
RALEIGH

BRIDGE #29 ON NC 182
OVER LEONARD FORK CREEK

Florence & Hutcheson
CONSULTING ENGINEERS
5121 Kingdom Way, Suite 100 Raleigh NC 27607
NC License No. F-0258

REVISIONS						SHEET NO.
NO.	BY	DATE	NO.	BY	DATE	17-A
1			3			TOTAL SHEETS
2			4			31

8/17/99

K:\36.2010
R:\Roadway\Proj\mol2862b_psh.dgn
Floodpro\ Hutch300 inc

NOTE: UTILIZE TEMPORARY ROCK SEDIMENT DAM TYPE – B OR SPECIAL STILLING BASIN AS STILLING BASIN WHERE APPLICABLE.

NOTE: PLACE TEMPORARY ROCK SEDIMENT DAMS TYPE – B AND TEMPORARY ROCK SILT CHECKS TYPE – A AT DRAINAGE OUTLETS.

CLEARING AND GRUBBING EROSION CONTROL FOR CONSTRUCTION SHEET 04

ENVIRONMENTALLY SENSITIVE AREA SEE PROJECT SPECIAL PROVISIONS

GRAPHIC SCALE 50 0 50 100

PROJECT REFERENCE NO.	SHEET NO.
B-5230	18
R/W SHEET NO.	
ROADWAY DESIGN ENGINEER	HYDRAULICS ENGINEER

EROSION CONTROL PLAN

ROADSIDE ENVIRONMENTAL UNIT
DEPARTMENT OF TRANSPORTATION
DIVISION OF HIGHWAYS
RALEIGH, N.C.

2006 STANDARD SPECIFICATIONS

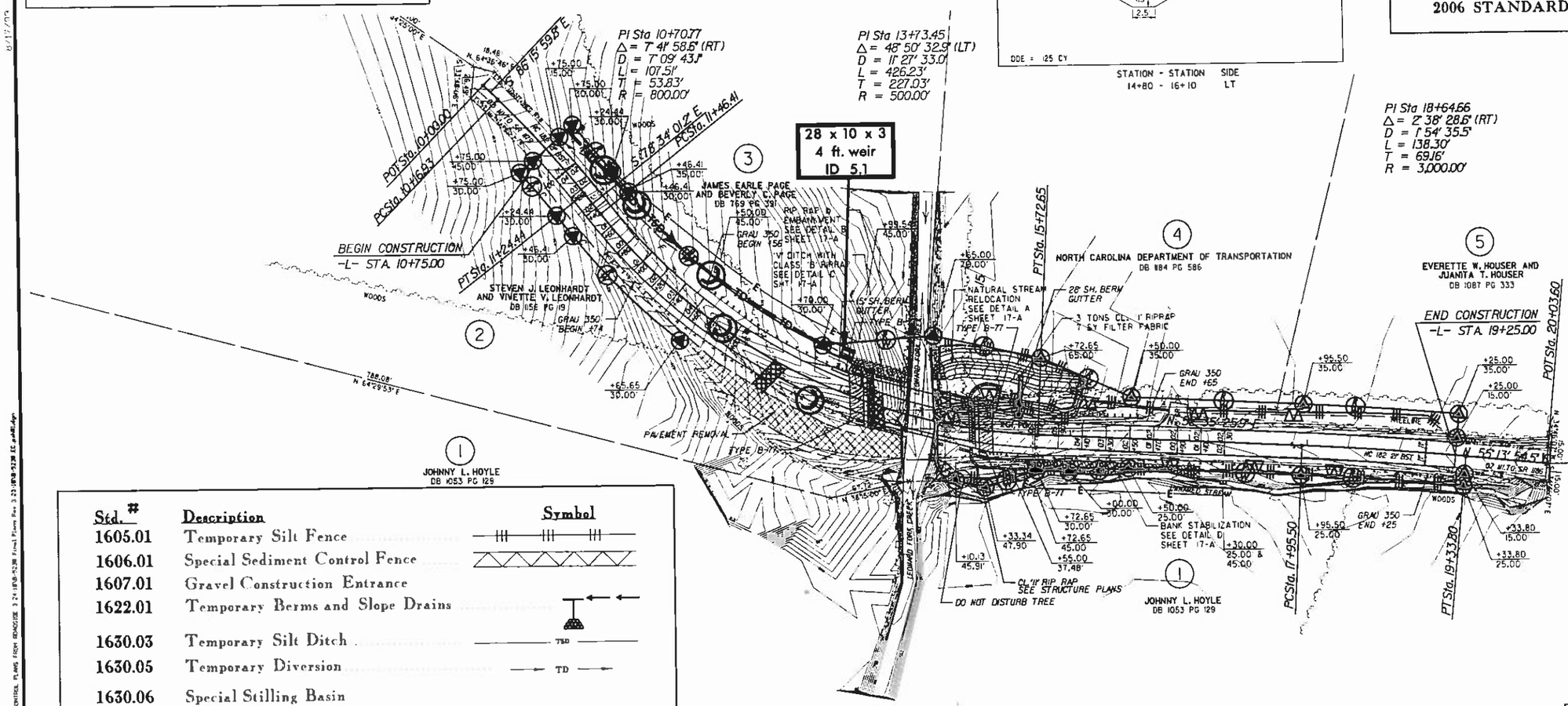

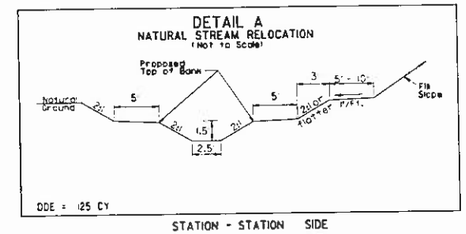

STATION - STATION SIDE
14+80 - 16+10 LT

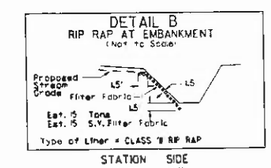

STATION SIDE
14+55 LT
14+75 LT

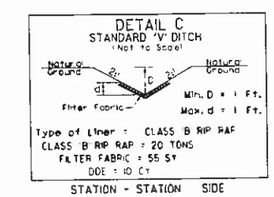

STATION - STATION SIDE
14+00 - 14+53 LT

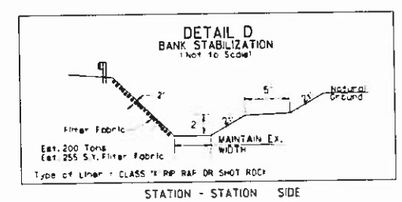

STATION - STATION SIDE
15+65 - 17+10 RT

Std. #	Description	Symbol
1605.01	Temporary Silt Fence	
1606.01	Special Sediment Control Fence	
1607.01	Gravel Construction Entrance	
1622.01	Temporary Berms and Slope Drains	
1630.03	Temporary Silt Ditch	TSD
1630.05	Temporary Diversion	TD
1630.06	Special Stilling Basin	
1632.03	Rock Inlet Sediment Trap Type C	
1633.01	Temporary Rock Silt Check Type-A	
	Temporary Rock Silt Check Type-B	
	Wattle with Polyacrylamide (PAM)	
1634.02	Temporary Rock Sediment Dam Type-B	

PROJECT NO. 37861
COUNTY: LINCOLN
STATION: 14+72.00
REPLACES BRIDGE NO. 29

STATE OF NORTH CAROLINA
DEPARTMENT OF TRANSPORTATION
RALEIGH

BRIDGE #29 ON NC 182
OVER LEONARD FORK CREEK

REVISIONS						SHEET NO.
NO.	BY	DATE	NO.	BY	DATE	18
1			3			TOTAL SHEETS
2			4			31

NOTE: UTILIZE TEMPORARY ROCK SEDIMENT DAM TYPE - B OR SPECIAL STILLING BASIN AS STILLING BASIN WHERE APPLICABLE.

GRAPHIC SCALE
50 0 50 100

PROJECT REFERENCE NO.	SHEET NO.
B-5230	19
R/W SHEET NO.	
ROADWAY DESIGN ENGINEER	HYDRAULICS ENGINEER

EROSION CONTROL PLAN

ROADSIDE ENVIRONMENTAL UNIT
DEPARTMENT OF TRANSPORTATION
DIVISION OF HIGHWAYS
RALEIGH, N.C.

2006 STANDARD SPECIFICATIONS

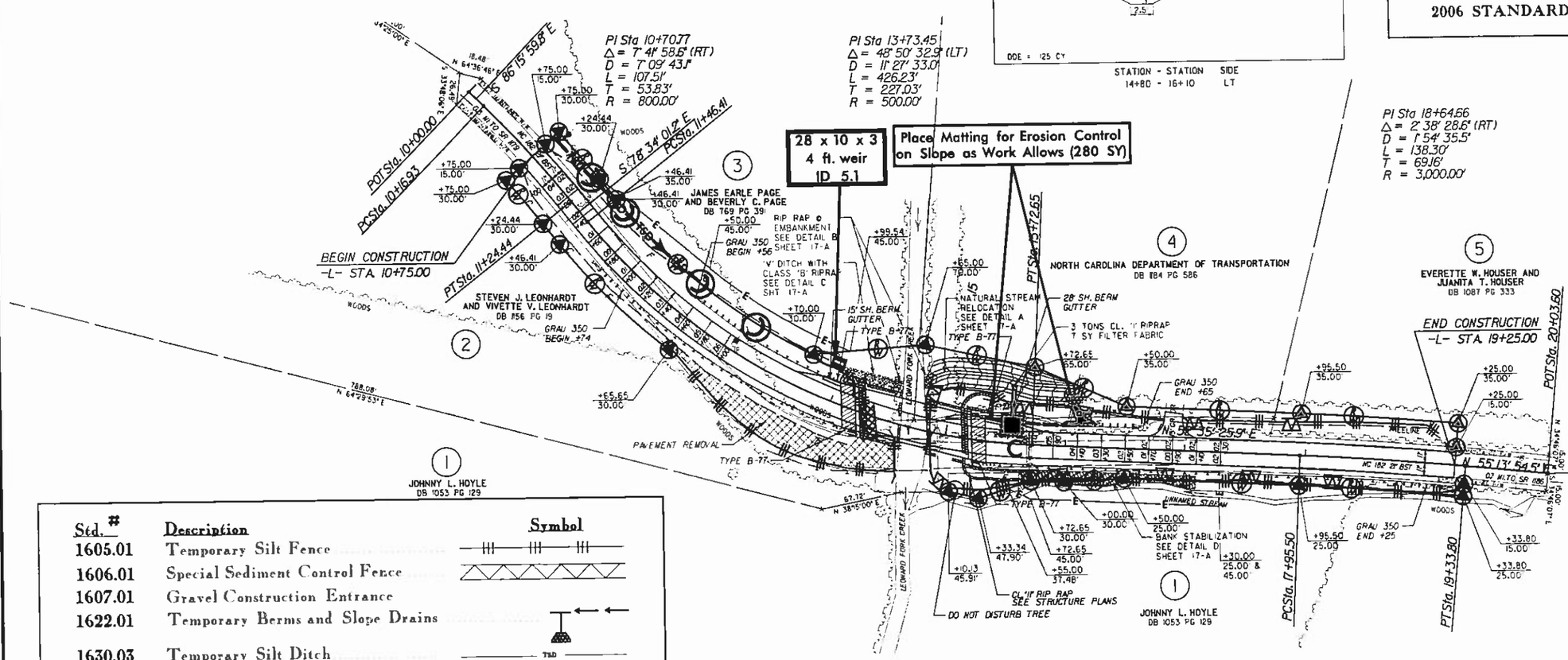

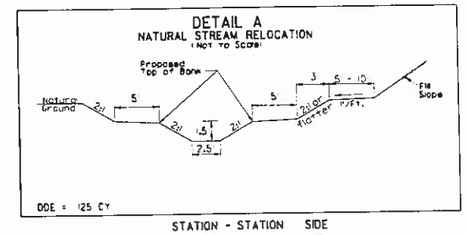

STATION - STATION SIDE
14+80 - 16+10 LT

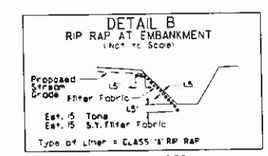

STATION SIDE
14+55 LT
14+75 LT

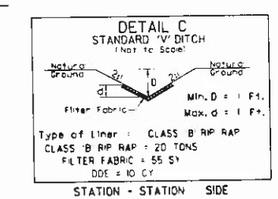

STATION - STATION SIDE
14+00 - 14+53 LT

Std. #	Description	Symbol
1605.01	Temporary Silt Fence	
1606.01	Special Sediment Control Fence	
1607.01	Gravel Construction Entrance	
1622.01	Temporary Berms and Slope Drains	
1630.03	Temporary Silt Ditch	TSD
1630.05	Temporary Diversion	TD
1630.06	Special Stilling Basin	
1632.03	Rock Inlet Sediment Trap Type C	
1633.01	Temporary Rock Silt Check Type-A	
	Temporary Rock Silt Check Type-B	
	Wattle with Polyacrylamide (PAM)	
1634.02	Temporary Rock Sediment Dam Type-B	

0.1 ACRE STREAMBANK REFORESTATION

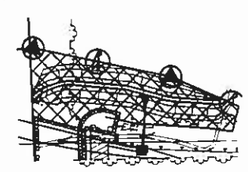

SEE RF-2, RF-3 AND PROJECT SPECIAL PROVISIONS

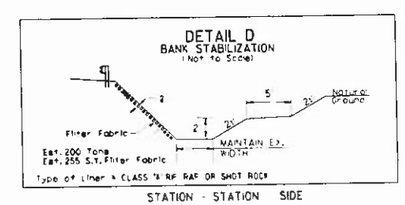

STATION - STATION SIDE
15+65 - 17+10 RT

PROJECT NO. 37861
COUNTY: LINCOLN
STATION: 14+72.00
REPLACES BRIDGE NO. 29

STATE OF NORTH CAROLINA
DEPARTMENT OF TRANSPORTATION
RALEIGH

BRIDGE #29 ON NC 182
OVER LEONARD FORK CREEK

REVISIONS						SHEET NO.
NO.	BY	DATE	NO.	BY	DATE	19
1			3			TOTAL SHEETS
2			4			31

PLOT: 3/26/2018 9:22:56 AM Rn & Associates, P.C.
FILE NAME: p:\NCDOT\Lincoln_29\B5230\Structure\REVISED EROSION CONTROL PLANS FROM ROADSIDE 3-23-18\B-5230_Final Plans Rev 3-23-18\B-5230_EC_pm42.dgn

PROJECT REFERENCE NO.	SHEET NO.
B-5230	20
R/W SHEET NO.	
ROADWAY DESIGN ENGINEER	HYDRAULICS ENGINEER

TEMPORARY ROCK SILT CHECK TYPE 'B' DETAIL

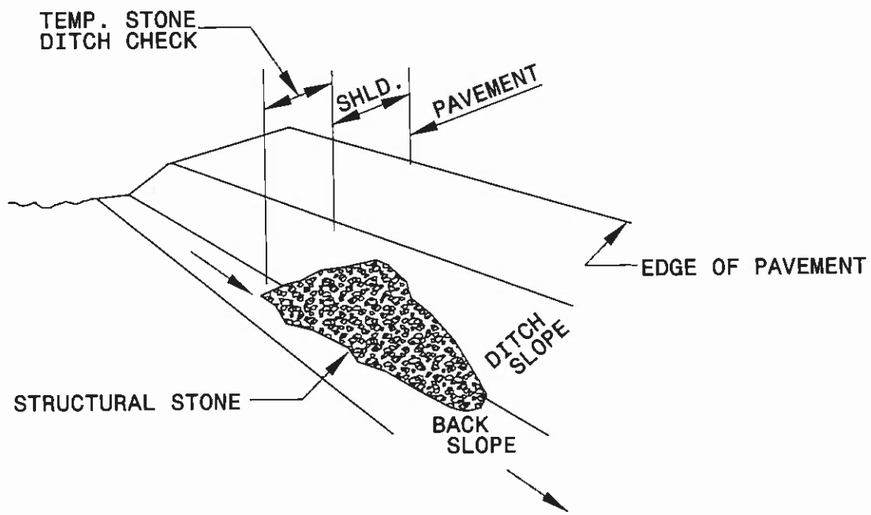

ISOMETRIC VIEW

NOTES:

USE CLASS 'B' EROSION CONTROL STONE FOR STRUCTURAL STONE.

THE ENGINEER MAY DIRECT THE OPTION OF CLASS "A" STONE FOR SITES HAVING LESS THAN ONE (1) ACRE DRAINAGE AREA AND A DITCH GRADE LESS THAN 3%.

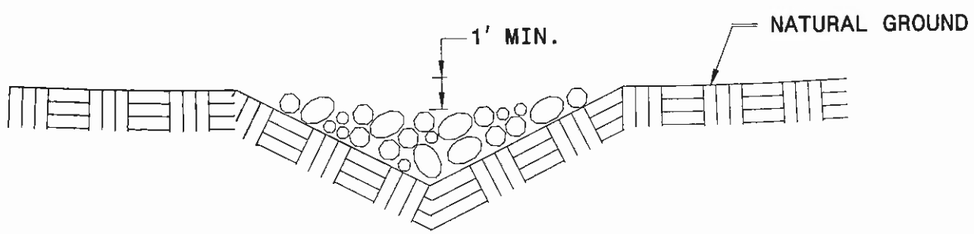

CROSS SECTION VEE DITCH

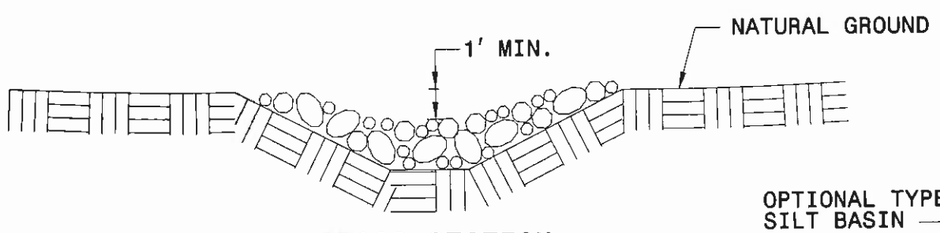

CROSS SECTION TRAPEZOIDAL DITCH

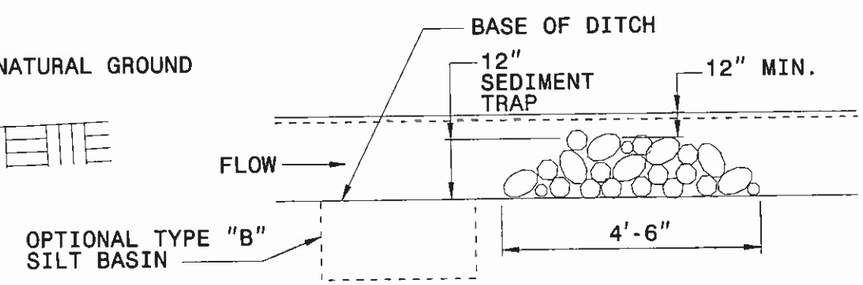

ELEVATION VIEW

PROJECT REFERENCE NO.	SHEET NO.
B-5230	21
R/W SHEET NO.	
ROADWAY DESIGN ENGINEER	HYDRAULICS ENGINEER

COIR FIBER BAFFLE DETAIL

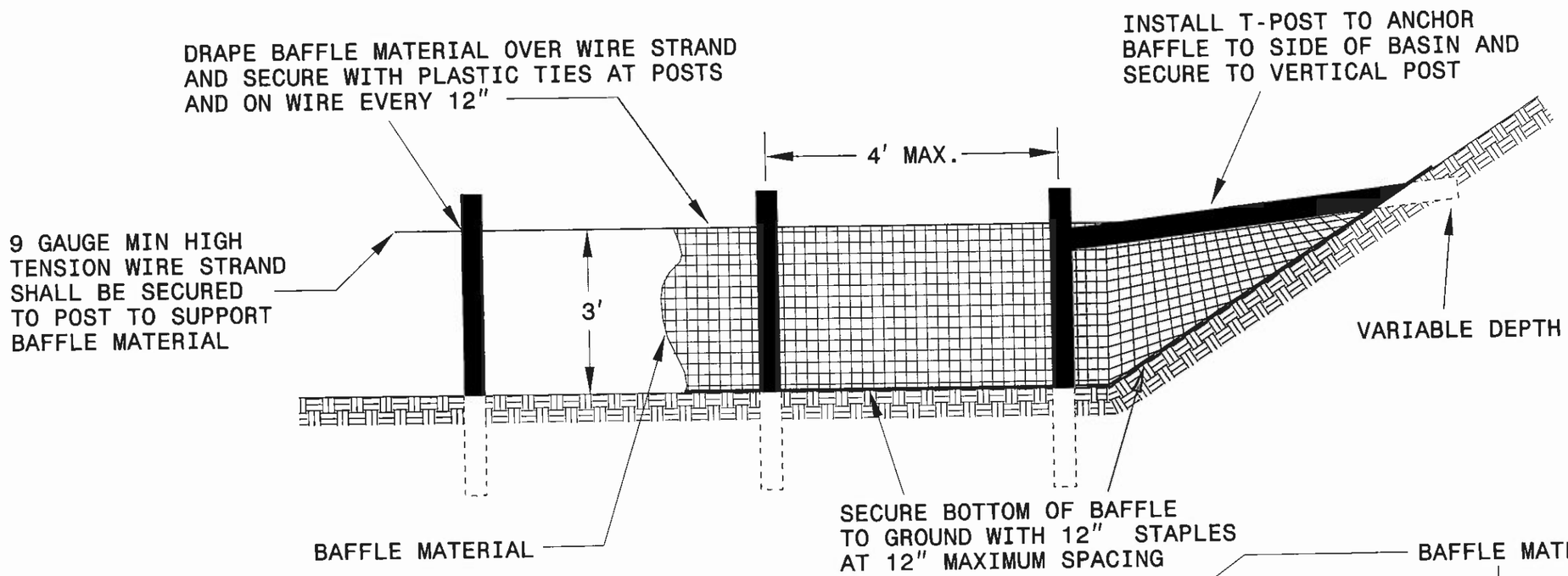

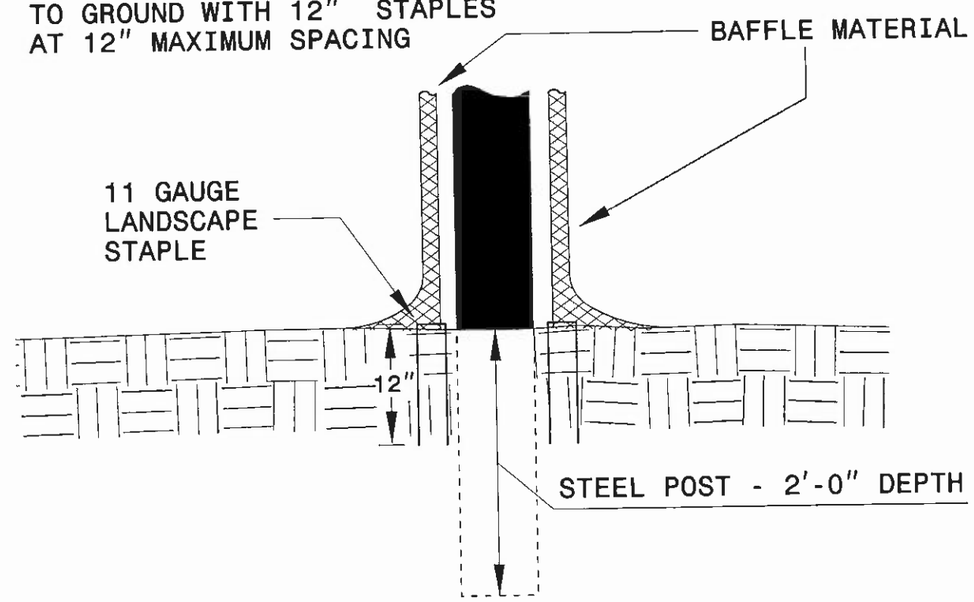

BAFFLE MATERIAL SHALL BE SECURED TO THE BOTTOM AND SIDES OF BASIN USING 12" LANDSCAPE STAPLES

NOTES:

1. INSTALL THREE(3) COIR FIBER BAFFLES IN SILT BASINS AND SEDIMENT DAMS AT DRAINAGE OUTLETS WITH A SPACING OF ¼ THE BASIN LENGTH.

2. TWO(2) COIR FIBER BAFFLES CAN BE INSTALLED IN SILT BASINS AND DAMS LESS THAN 20 FT. IN LENGTH WITH A SPACING OF 1/3 THE BASIN LENGTH.

3. TOP HEIGHT OF COIR FIBER BAFFLES SHALL NOT BE BELOW BASE OF EMERGENCY SPILLWAY ELEVATION.

PROJECT REFERENCE NO.	SHEET NO.
B-5230	22
R/W SHEET NO.	
ROADWAY DESIGN ENGINEER	HYDRAULICS ENGINEER

WATTLE WITH POLYACRYLAMIDE (PAM) DETAIL

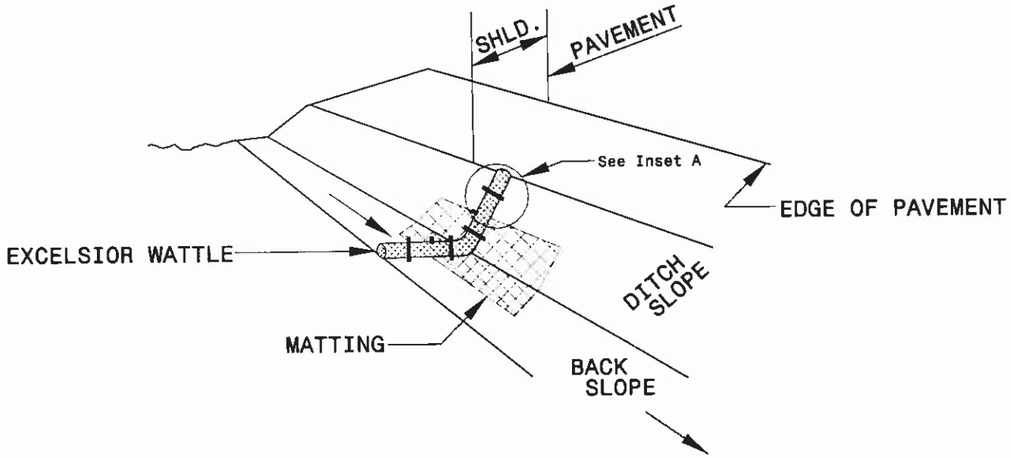

ISOMETRIC VIEW

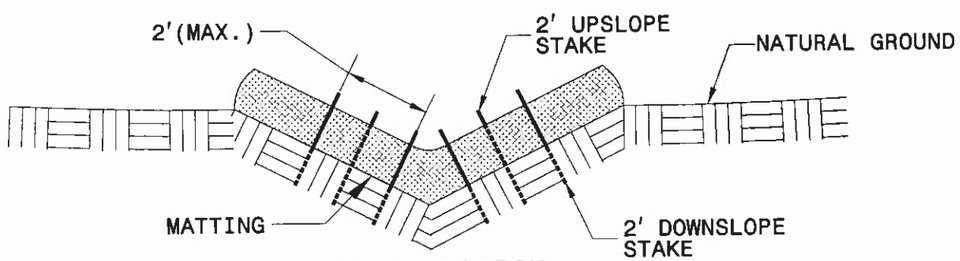

CROSS SECTION VEE DITCH

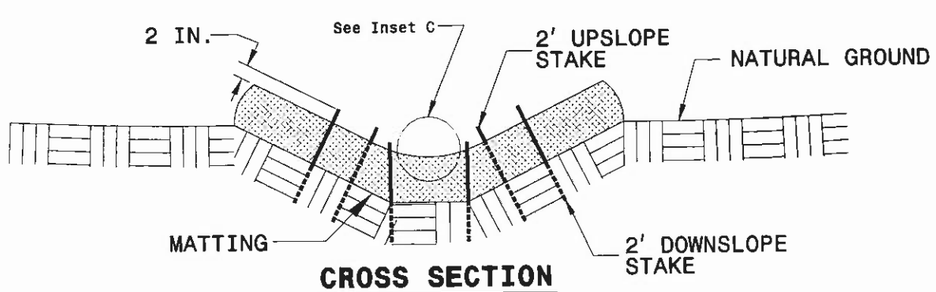

CROSS SECTION TRAPEZOIDAL DITCH

NOTES:

USE MINIMUM 12 IN. DIAMETER EXCELSIOR WATTLE.

USE 2 FT. WOODEN STAKES WITH A 2 IN. BY 2 IN. NOMINAL CROSS SECTION.

ONLY INSTALL WATTLE(S) TO A HEIGHT IN DITCH SO FLOW WILL NOT WASH AROUND WATTLE AND SCOUR DITCH SLOPES AND AS DIRECTED.

INSTALL A MINIMUM OF 2 UPSLOPE STAKES AND 4 DOWNSLOPE STAKES AT AN ANGLE TO WEDGE WATTLE TO BOTTOM OF DITCH.

PROVIDE STAPLES MADE OF 0.125 IN. DIAMETER STEEL WIRE FORMED INTO A U SHAPE NOT LESS THAN 12" IN LENGTH.

INSTALL STAPLES APPROXIMATELY EVERY 1 LINEAR FOOT ON BOTH SIDES OF WATTLE AND AT EACH END TO SECURE IT TO THE SOIL.

INSTALL MATTING IN ACCORDANCE WITH SECTION 1631 OF THE STANDARD SPECIFICATIONS.

PRIOR TO POLYACRYLAMIDE (PAM) APPLICATION, OBTAIN A SOIL SAMPLE FROM PROJECT LOCATION, AND FROM OFFSITE MATERIAL, AND ANALYZE FOR APPROPRIATE PAM FLOCCULANT TO BE APPLIED TO EACH WATTLE.

INITIALLY APPLY 2 OUNCES OF ANIONIC OR NEUTRALLY CHARGED PAM OVER WATTLE WHERE WATER WILL FLOW AND 1 OUNCE OF PAM ON MATTING ON EACH SIDE OF WATTLE. REAPPLY PAM AFTER EVERY RAINFALL EVENT THAT IS EQUAL TO OR EXCEEDS 0.50 IN.

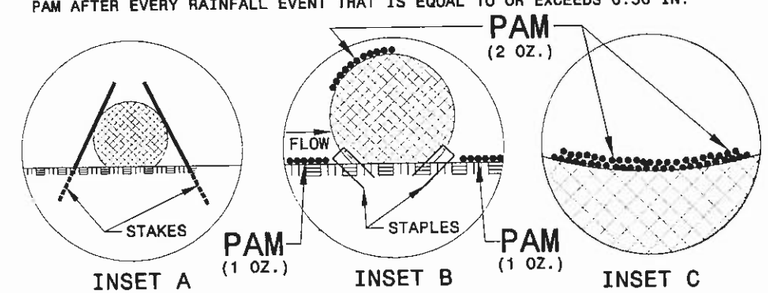

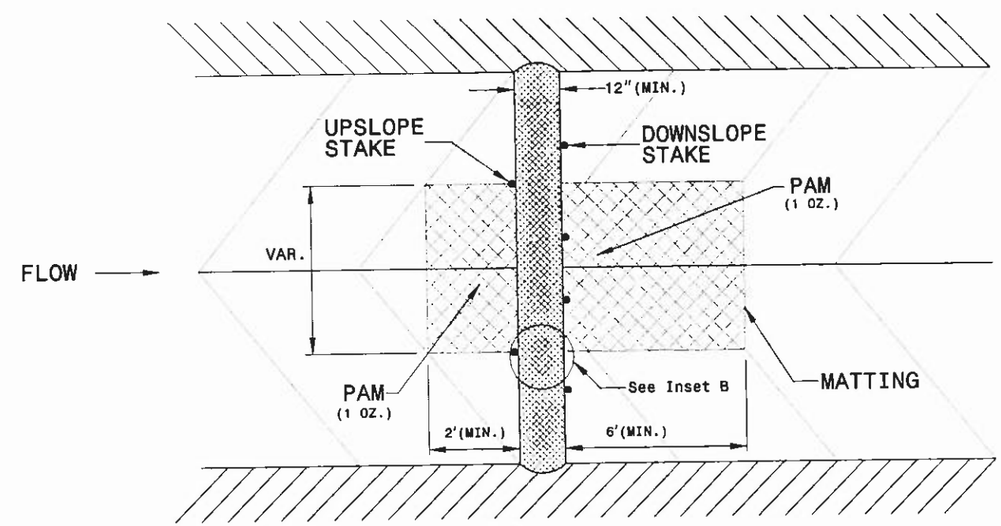

TOP VIEW

PROJECT REFERENCE NO.	SHEET NO.
B-5230	23
R/W SHEET NO.	
ROADWAY DESIGN ENGINEER	HYDRAULICS ENGINEER

MATTING INSTALLATION DETAIL

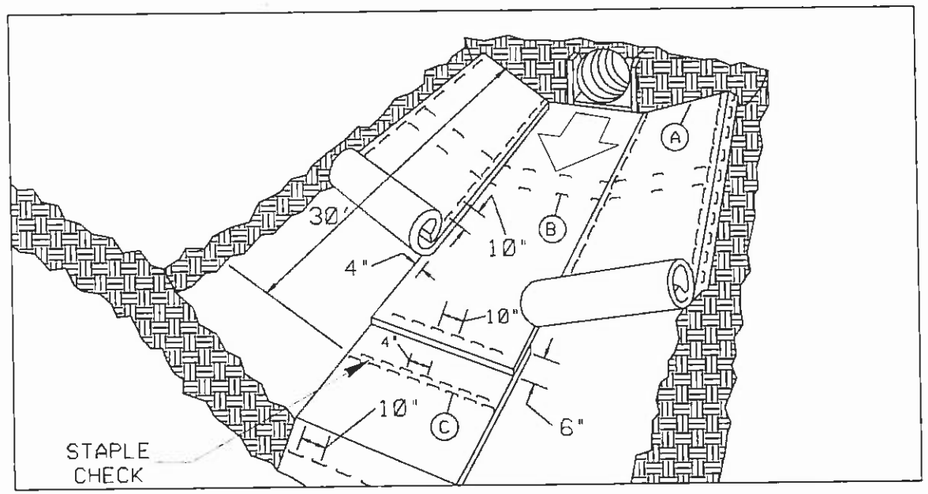

MATTING IN DITCHES

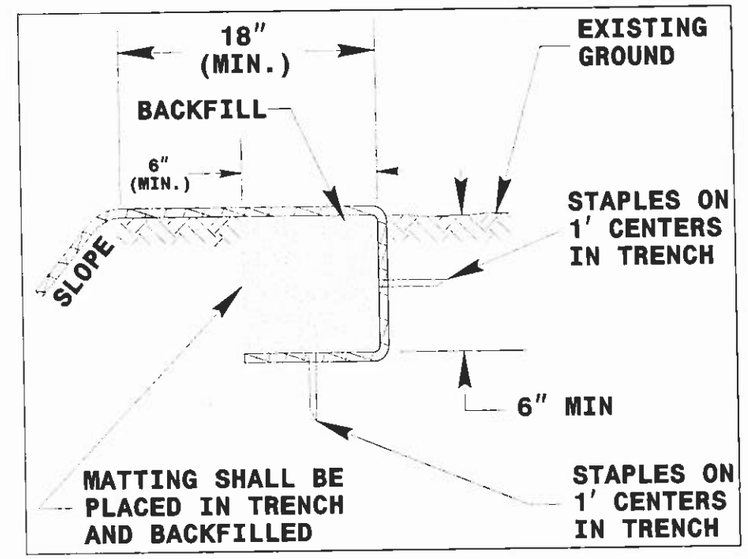

DIAGRAM (A)

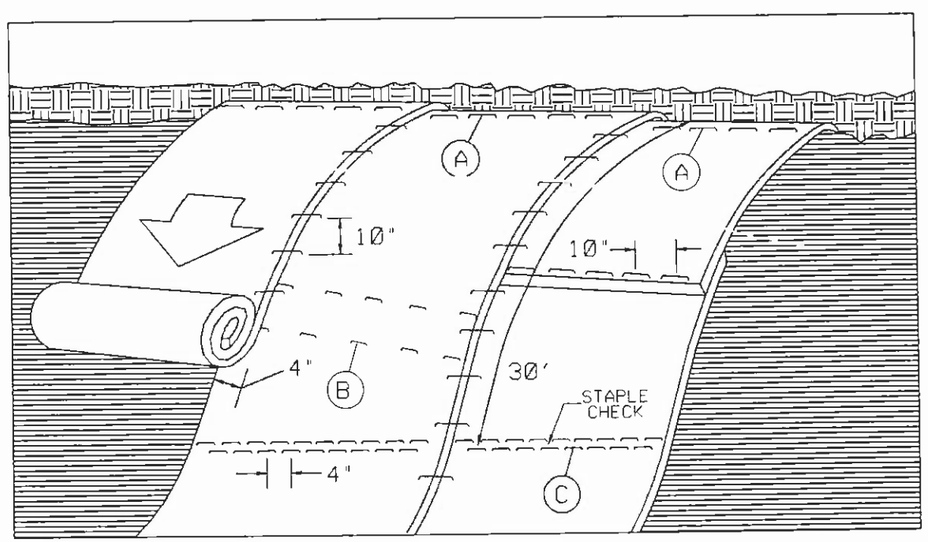

MATTING ON SLOPES

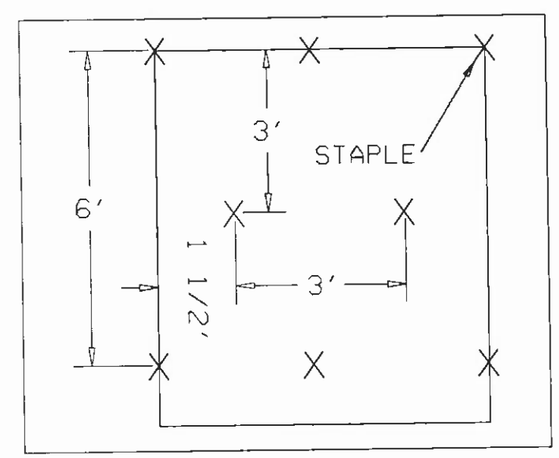

DIAGRAM (B)

STAPLE CHECK PATTERN

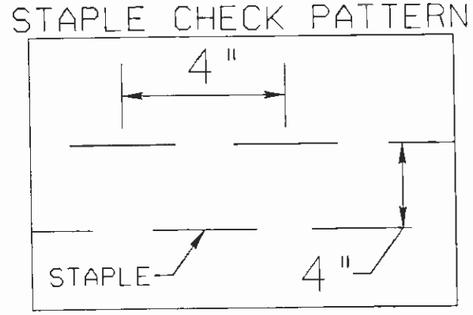

DIAGRAM (C)

NOTES:

THIS DETAIL APPLIES TO STRAW, EXCELSIOR, AND PERMANENT SOIL REINFORCEMENT MAT (PSRM) INSTALLATION.

STAPLES SHALL BE NO. 11 GAUGE STEEL WIRE FORMED INTO A "U" SHAPE WITH A MINIMUM THROAT WIDTH OF 1 INCH AND NOT LESS THAN 6 INCHES IN LENGTH.

NOT TO SCALE

PROJECT REFERENCE NO.	SHEET NO.
B-5230	24
R/W SHEET NO.	
ROADWAY DESIGN ENGINEER	HYDRAULICS ENGINEER

PLANTING DETAILS

SEEDLING / LINER BAREROOT PLANTING DETAIL

HEALING IN

1. Locate a healing-in site in a shady, well protected area.
2. Excavate a flat bottom trench 12 inches deep and provide drainage.

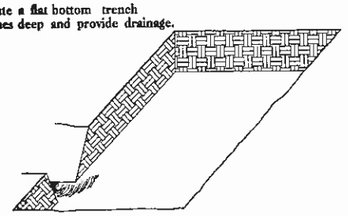

3. Backfill the trench with 2 inches well rotted sawdust. Place a 2 inch layer of well rotted sawdust at a sloping angle at one end of the trench.

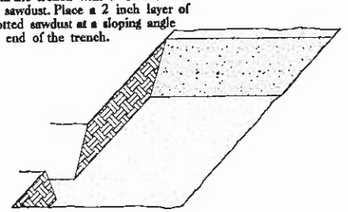

4. Place a single layer of plants against the sloping end so that the root collar is at ground level.

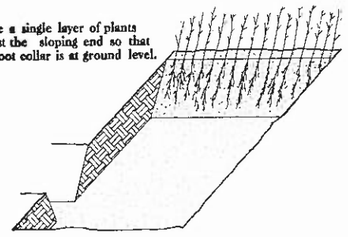

5. Place a 2 inch layer of well rotted sawdust over the roots maintaining a sloping angle.

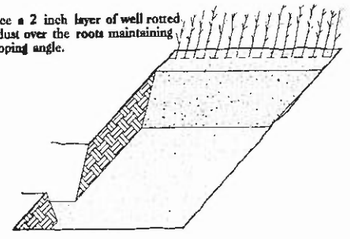

6. Repeat layers of plants and sawdust as necessary and water thoroughly.

DIBBLE PLANTING METHOD
USING THE KBC PLANTING BAR

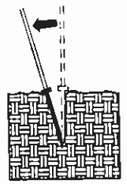

1. Insert planting bar as shown and pull handle toward planter.

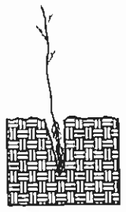

2. Remove planting bar and place seedling at correct depth.

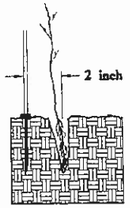

3. Insert planning bar 2 inches toward planter from seedling.

4. Pull handle of bar toward planter, firming soil at bottom.

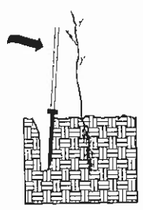

5. Push handle forward firming soil at top.

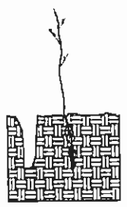

6. Leave compaction hole open. Water thoroughly.

PLANTING NOTES:

PLANTING BAG
During planting, seedlings shall be kept in a moist canvas bag or similar container to prevent the root systems from drying.

KBC PLANTING BAR
Planting bar shall have a blade with a triangular cross section, and shall be 12 inches long, 4 inches wide and 1 inch thick at center.

ROOT PRUNING
All seedlings shall be root pruned, if necessary, so that no roots extend more than 10 inches below the root collar.

REFORESTATION

☐ TREE REFORESTATION SHALL BE PLANTED 6 FT. TO 10 FT. ON CENTER, RANDOM SPACING, AVERAGING 8 FT. ON CENTER, APPROXIMATELY 680 PLANTS PER ACRE.

REFORESTATION

MIXTURE, TYPE, SIZE, AND FURNISH SHALL CONFORM TO THE FOLLOWING:

40% LIRIODENDRON TULIPIFERA	TULIP POPLAR	12 in - 18 in BR
30% PRUNUS SEROTINA	BLACK CHERRY	12 in - 18 in BR
30% QUERCUS ALBA	WHITE OAK	12 in - 18 in BR

REFORESTATION DETAIL SHEET

N.C.D.O.T. - ROADSIDE ENVIRONMENTAL UNIT

PROJECT REFERENCE NO.	SHEET NO.
B-5230	25
R/W SHEET NO.	
ROADWAY DESIGN ENGINEER	HYDRAULICS ENGINEER

PLANTING DETAILS

LIVE STAKES PLANTING DETAIL

LIVE STAKE

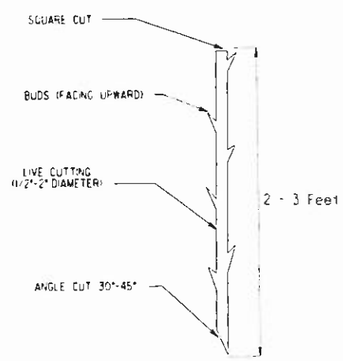

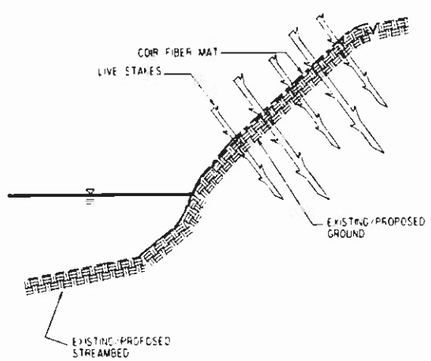

BANK STABILIZATION WITH LIVE STAKES

NOTE:
LIVE STAKES SHALL BE SPACED APPROXIMATELY 4 FEET ON CENTER
LIVE STAKES SHALL BE DRIVEN UNTIL APPROXIMATELY 3/4 OF LIVE STAKE IS WITHIN GROUND

BAREROOT PLANTING DETAIL DIBBLE PLANTING METHOD USING THE KBC PLANTING BAR

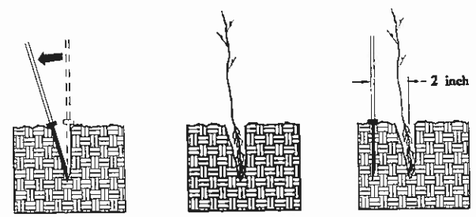

1. Insert planting bar as shown and pull handle toward planter.
2. Remove planting bar and place seedling at correct depth.
3. Insert planting bar 2 inches toward planter from seedling.

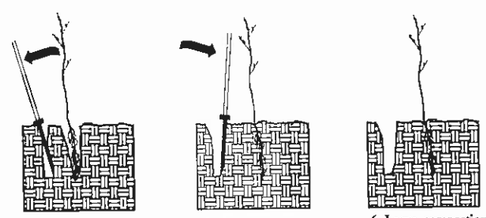

4. Pull handle of bar toward planter, firming soil at bottom.
5. Push handle forward firming soil at top.
6. Leave compaction hole open. Water thoroughly.

PLANTING NOTES:

PLANTING BAG
During planting, seedlings shall be kept in a moist canvas bag or similar container to prevent the root systems from drying.

KBC PLANTING BAR
Planting bar shall have a blade with a triangular cross section, and shall be 12 inches long, 4 inches wide and 1 inch thick at center.

ROOT PRUNING
All seedlings shall be root pruned, if necessary, so that no roots extend more than 10 inches below the root collar.

- ☐ TYPE 1 STREAMBANK REFORESTATION SHALL BE PLANTED 3 FT. TO 5 FT. ON CENTER, RANDOM SPACING, AVERAGING 4 FT. ON CENTER, APPROXIMATELY 2724 PLANTS PER ACRE.
- ☐ TYPE 2 STREAMBANK REFORESTATION SHALL BE PLANTED 6 FT. TO 10 FT. ON CENTER, RANDOM SPACING, AVERAGING 8 FT. ON CENTER, APPROXIMATELY 680 PLANTS PER ACRE.
- ☐ NOTE: TYPE 1 AND TYPE 2 STREAMBANK REFORESTATION SHALL BE PAID FOR AS "STREAMBANK REFORESTATION"

STREAMBANK REFORESTATION TYPICAL

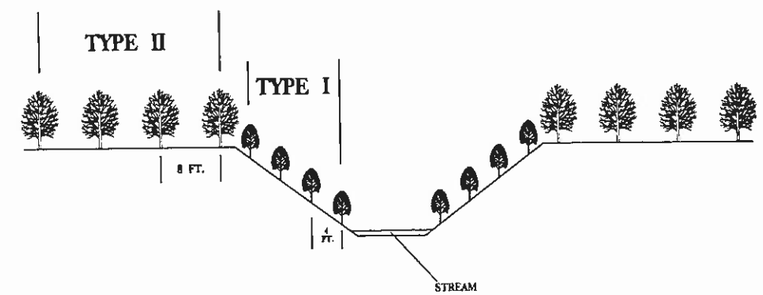

STREAMBANK REFORESTATION

MIXTURE, TYPE, SIZE, AND FURNISH SHALL CONFORM TO THE FOLLOWING:

TYPE 1		
50% SALIX NIGRA	BLACK WILLOW	2 ft - 3 ft LIVE STAKES
50% CORNUS AMOMUM	SILKY DOGWOOD	2 ft - 3 ft LIVE STAKES
TYPE 2		
40% LIRIODENDRON TULIPIFERA	TULIP POPLAR	12 in - 18 in BR
30% QUERCUS ALBA	WHITE OAK	12 in - 18 in BR
30% PRUNUS SEROTINA	BLACK CHERRY	12 in - 18 in BR

☐ SEE PLAN SHEETS FOR AREAS TO BE PLANTED

STREAMBANK REFORESTATION DETAIL SHEET 1 OF 2

N.C.D.O.T. - ROADSIDE ENVIRONMENTAL UNIT

PROJECT REFERENCE NO.	SHEET NO.
B-5230	26
R/W SHEET NO.	
ROADWAY DESIGN ENGINEER	HYDRAULICS ENGINEER

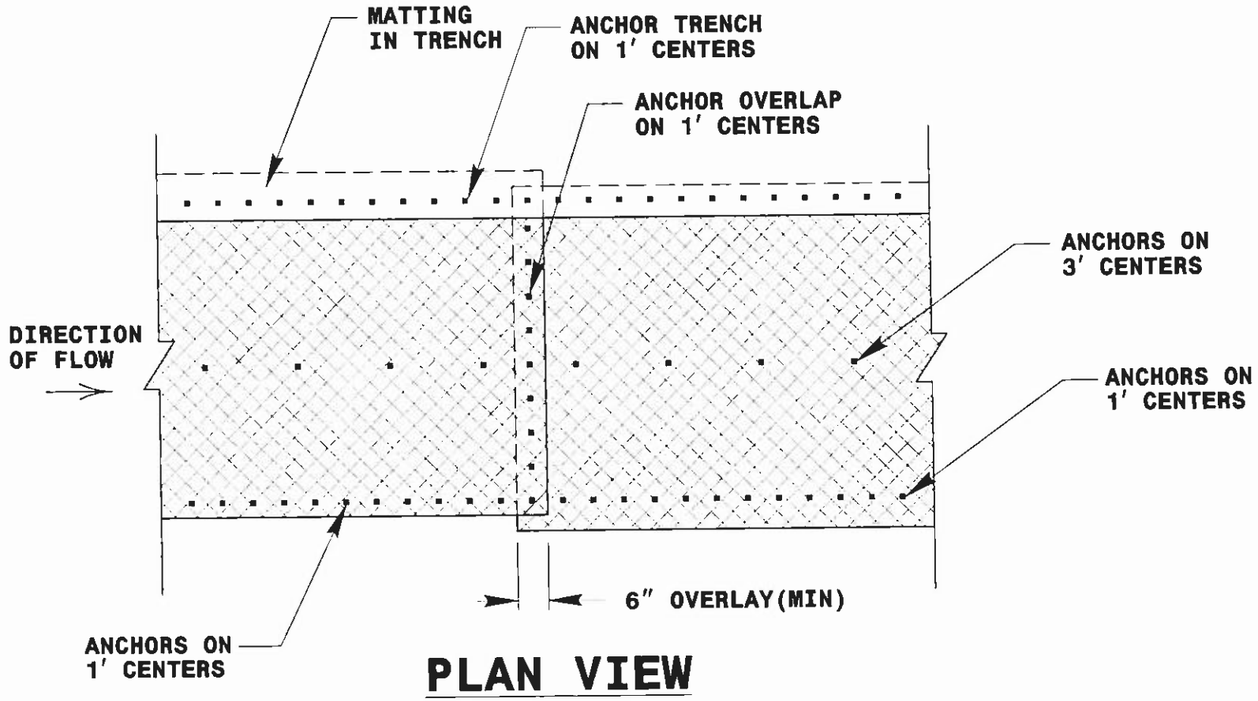

PLAN VIEW

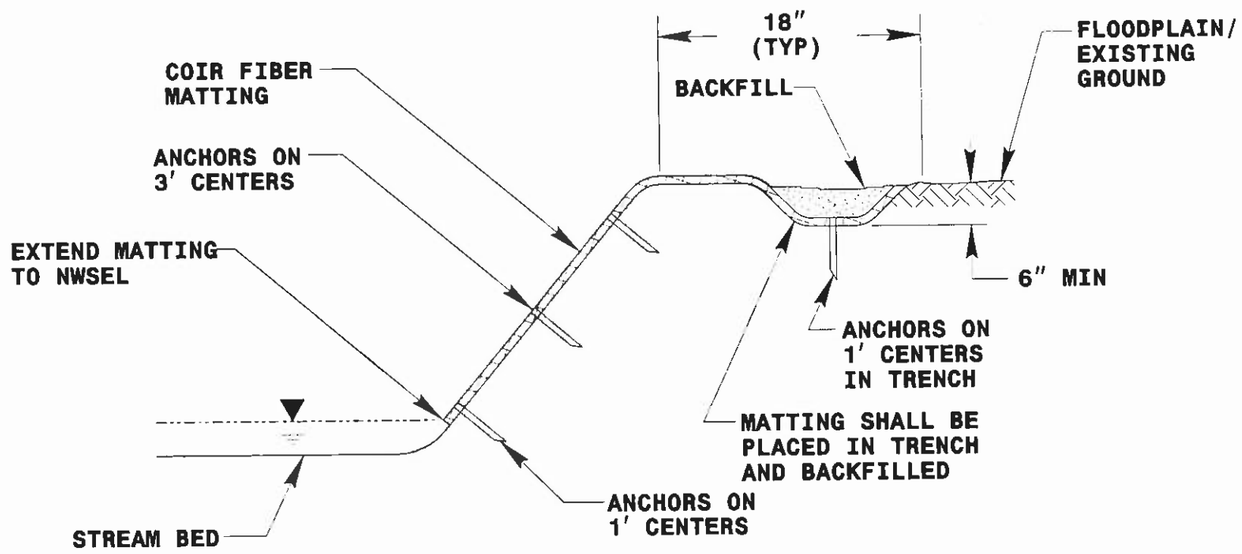

TYPICAL CROSS SECTION

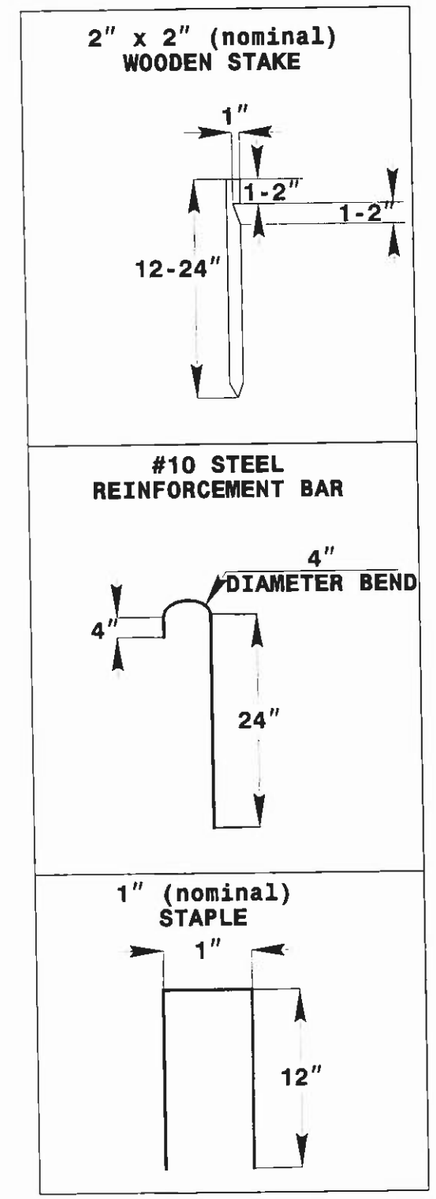

ANCHOR OPTIONS

COIR FIBER MATTING DETAIL

NOT TO SCALE

STREAMBANK REFORESTATION

DETAIL SHEET 2 OF 2

N.C.D.O.T.- ROADSIDE ENVIRONMENTAL UNIT

PROJ. REFERENCE NO.	SHEET NO.
B-5230	27

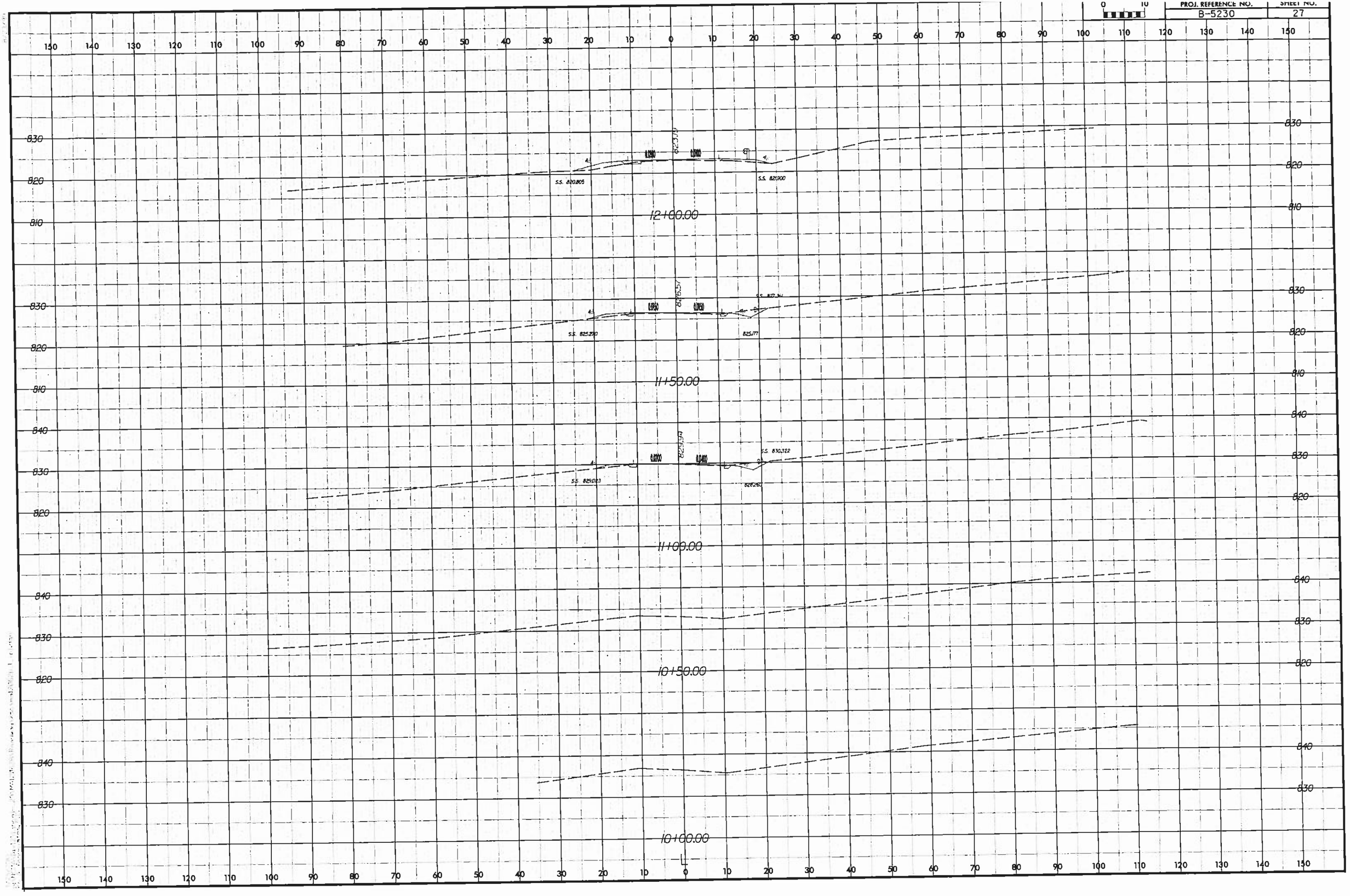

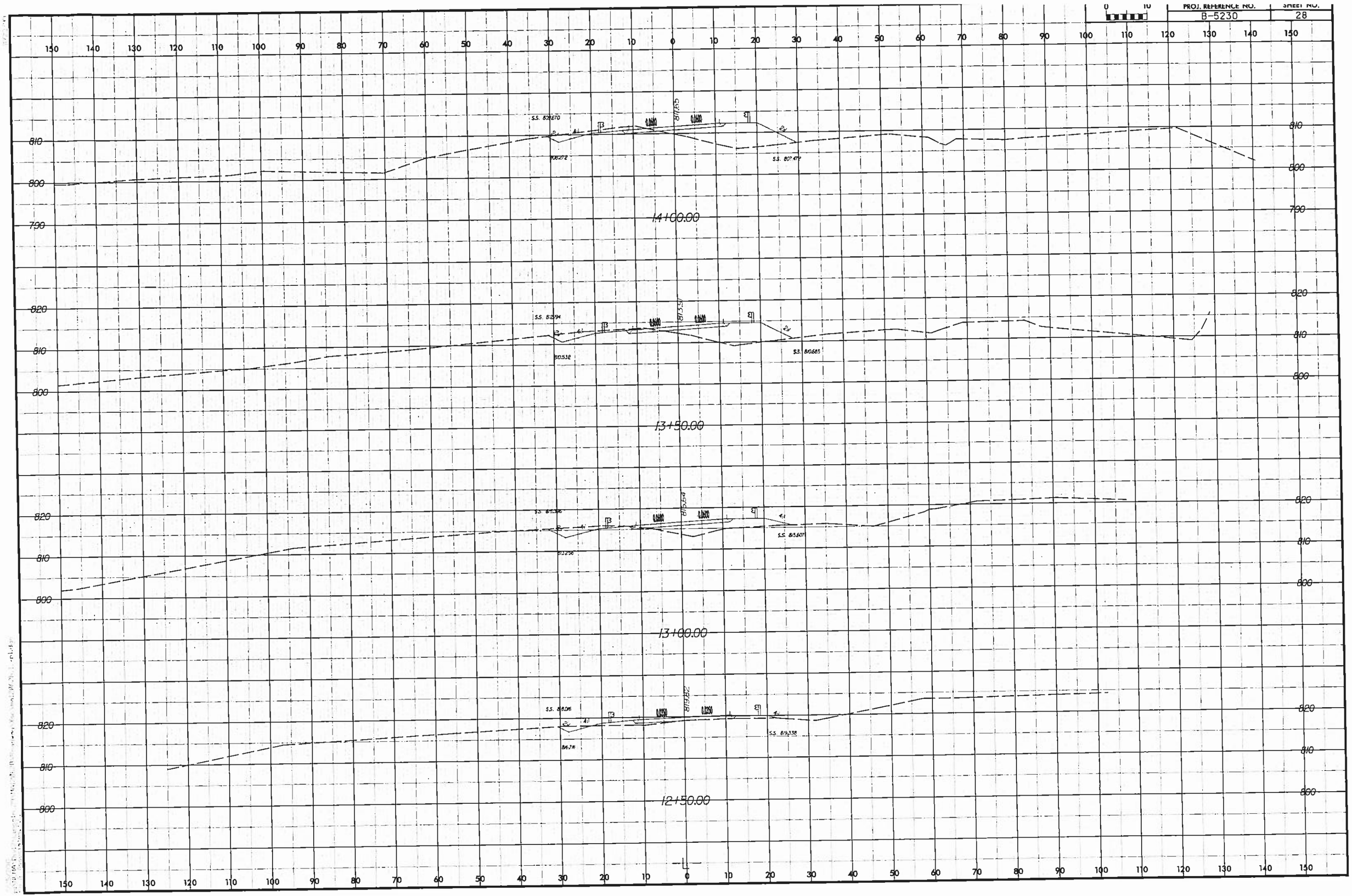
14+00.00
S.S. 82.670
81.65
S.S. 80.479
13+50.00
S.S. 82.94
81.59
S.S. 80.685
13+00.00
81.56
S.S. 85.607
12+50.00
81.52
S.S. 89.338

PROJ. REFERENCE NO.	SHEET NO.
B-5230	29

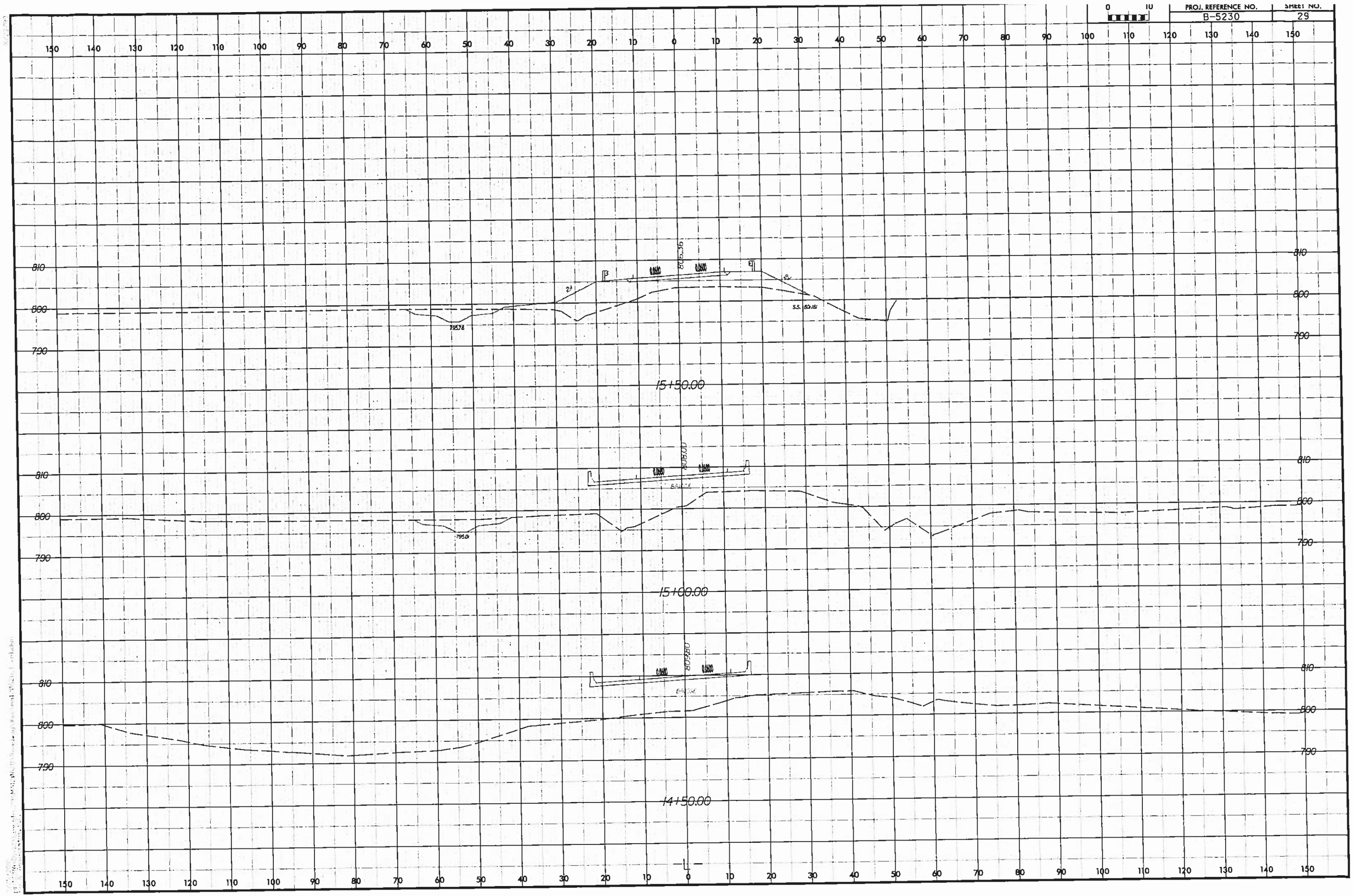

PROJ. REFERENCE NO.	SHEET NO.
B-5230	30

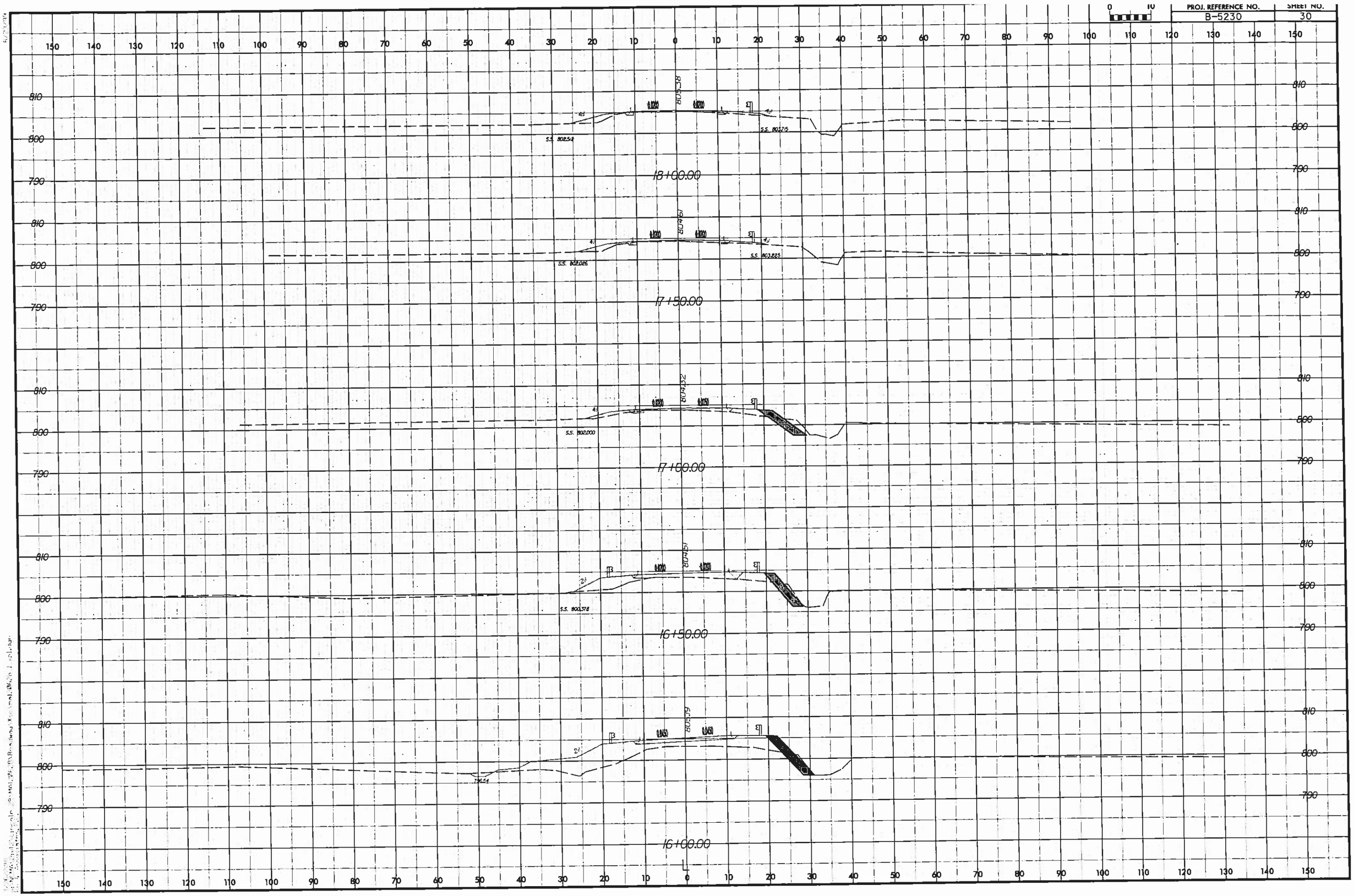
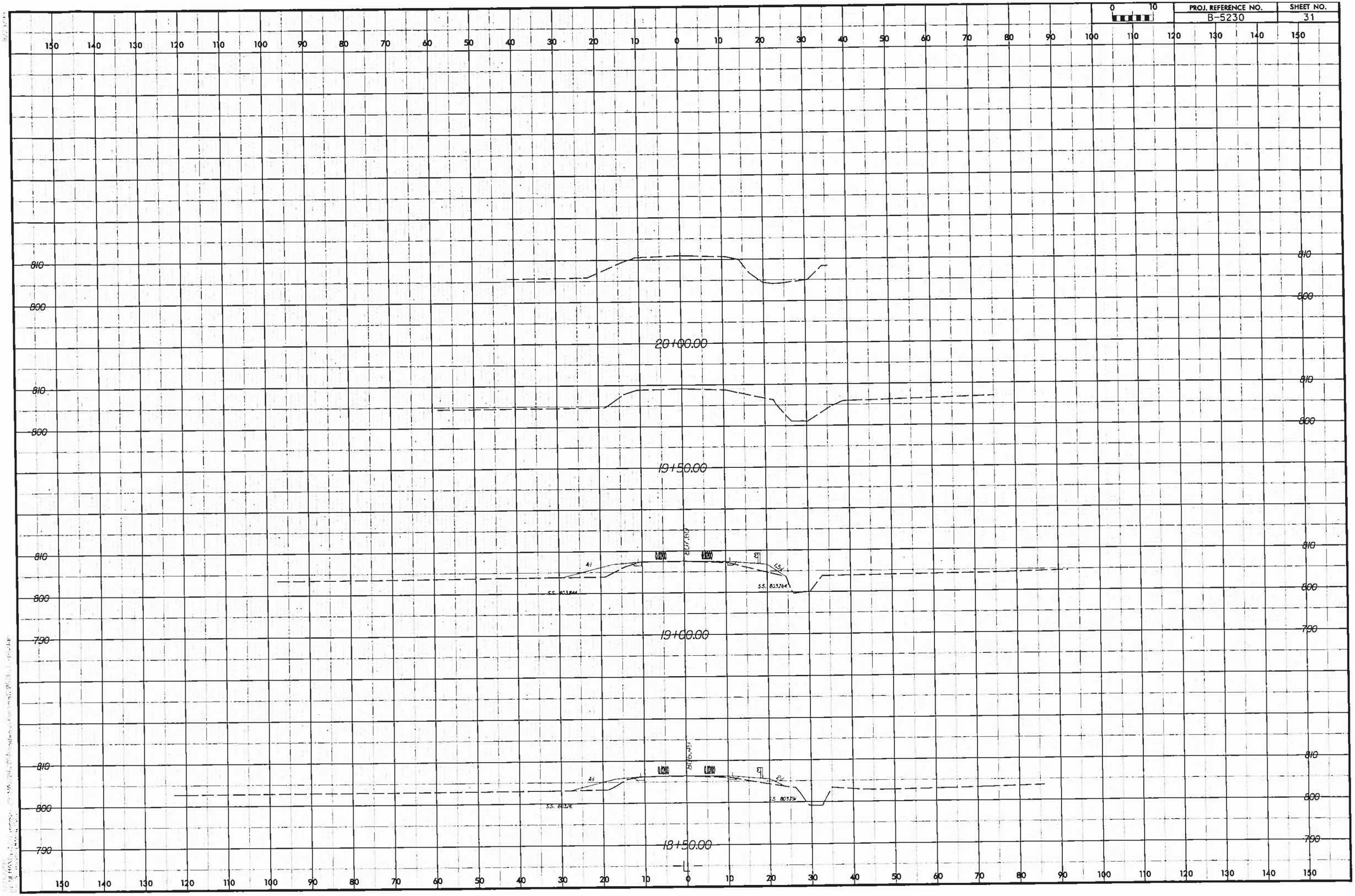
PROJ. REFERENCE NO.	SHEET NO.
B-5230	31