PROJ. NO. B-5223

191 CABARRUS COUNTY

B.M. #2 - RR SPIKE IN BASE OF POWER POLE
47.44' LEFT OF STA. 15+50.92 -L-, ELEV. = 592.84

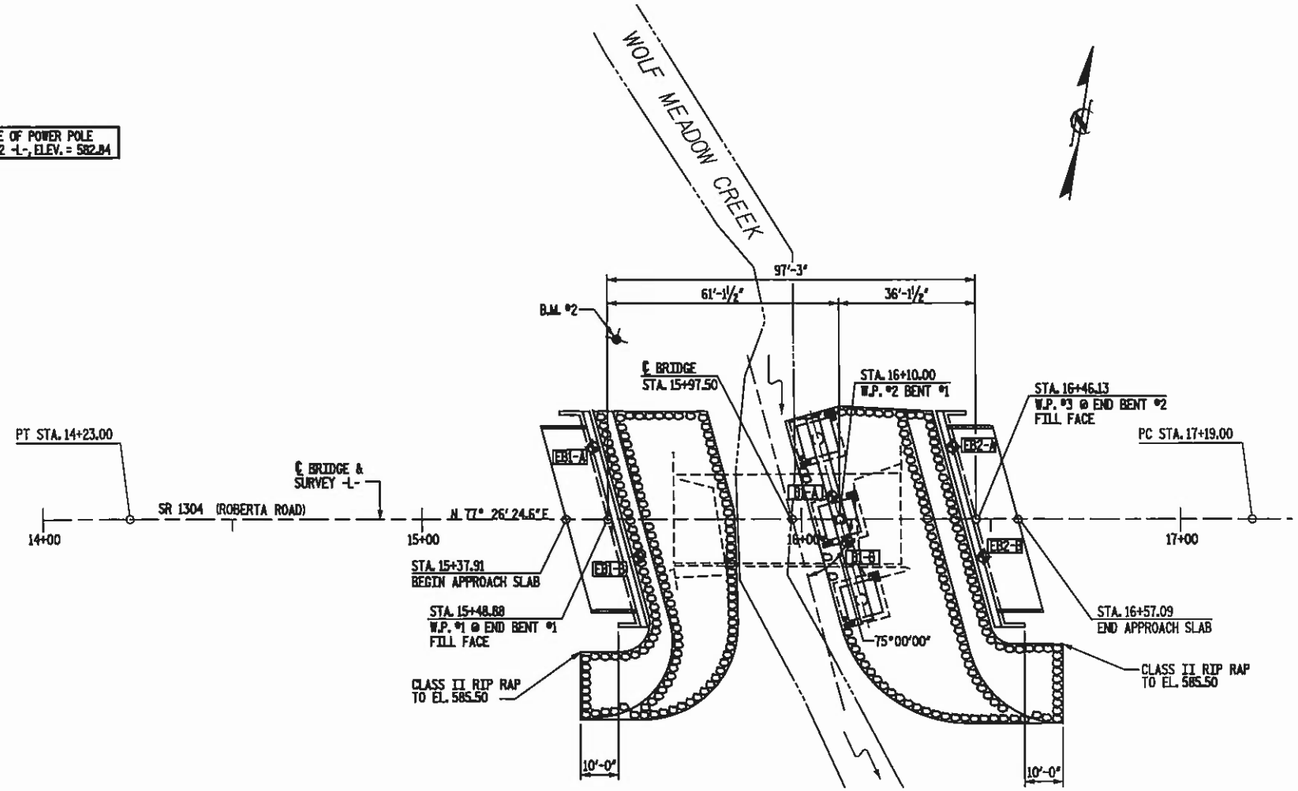

PLAN

SCALE: 1" = 20'-0"

HYDRAULIC DATA

DESIGN DISCHARGE	=	1100	CFS
DESIGN FREQUENCY	=	50	YRS
DESIGN HW ELEVATION	=	581.11	FT
DRAINAGE AREA	=	2.60	SQ MI
BASE DISCHARGE (Q_{100})	=	1400	CFS
BASE HW ELEVATION	=	581.92	FT

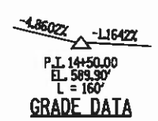

GRADE DATA

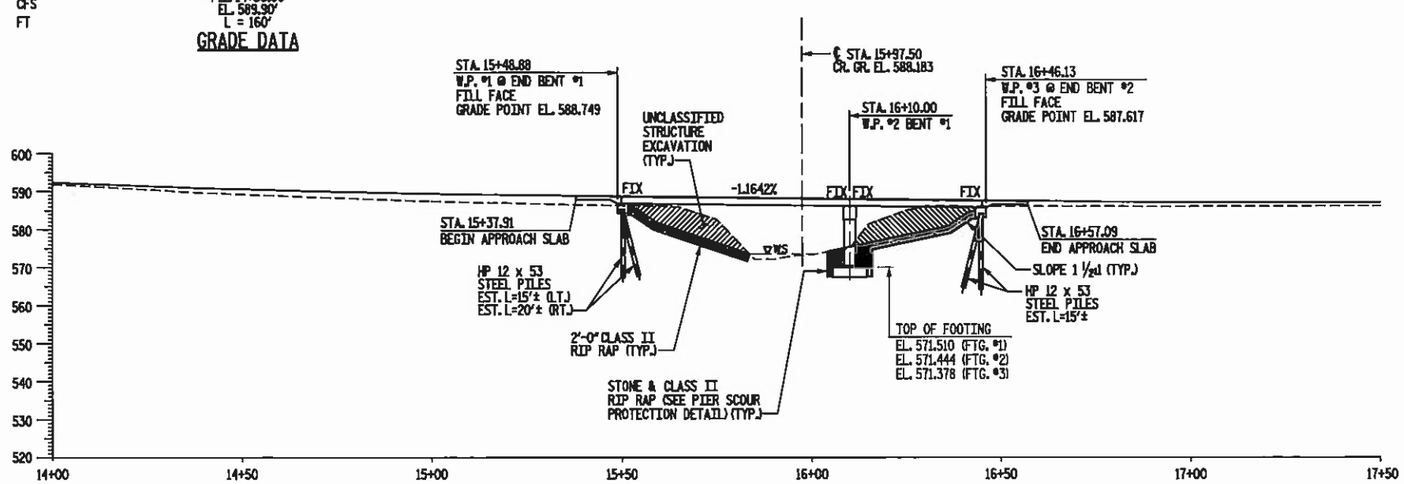

PROFILE ALONG ℄ SURVEY

SCALE: 1" = 20'

NOTES

1. ALL PILES SHALL BE DRIVEN TO A MINIMUM BEARING CAPACITY OF 50 TONS EACH.
2. THE QUANTITY OF RIP RAP TO BE PAID FOR WILL BE THE ACTUAL NUMBER OF TONS OF EACH CLASS OF RIP RAP WHICH HAS BEEN INCORPORATED INTO THE COMPLETED AND ACCEPTED WORK. THE RIP RAP WILL BE MEASURED BY BEING WEIGHED IN TRUCKS ON CERTIFIED PLATFORM SCALES OR OTHER CERTIFIED WEIGHING DEVICES. THE QUANTITY OF RIP RAP WILL BE PAID FOR AT THE CONTRACT UNIT PRICE PER TON:

PLAIN RIP RAP CLASS II (2'-0" THICK)		FILTER FABRIC
END BENT NO. 1	330 TONS	310 SQUARE YARDS
BENT NO. 1	80 TONS	0 SQUARE YARDS
END BENT NO. 2	440 TONS	400 SQUARE YARDS
TOTAL	850 TONS	710 SQUARE YARDS
CLASS B RIP RAP (1'-6" THICK)		
TOTAL	2 TONS	7 SQUARE YARDS
CLASS I RIP RAP (1'-6" THICK)		
TOTAL	33 TONS	53 SQUARE YARDS

3. THIS STRUCTURE HAS BEEN DESIGNED IN ACCORDANCE WITH FHWA'S TECHNICAL ADVISORY T5140.20 (SCOUR AT BRIDGES).
4. FOOTING SCOUR PROTECTION SHALL BE REQUIRED AT BENT NO. 1. RIP RAP NOT TO BE PLACED ABOVE THE BANK.
5. THE SCOUR CRITICAL ELEVATIONS FOR BENT NO. 1 ARE BOTTOM OF FOOTING ELEVATION 569.010 FT. (FTG. 1), EL. 568.944 FT. (FTG. 2), AND EL. 568.878 FT. (FTG. 3). THE SCOUR CRITICAL ELEVATIONS ARE FOR USE BY MAINTENANCE FORCES TO MONITOR POSSIBLE SCOUR PROBLEMS DURING THE LIFE OF THE STRUCTURE.
6. PILES AT END BENT NO. 1 SHALL BE DRIVEN TO AN ELEVATION NO HIGHER THAN EL. 571.0 FT. AND SATISFY THE BEARING CAPACITY OF 50 TONS EACH.
7. PILES AT END BENT NO. 2 SHALL BE DRIVEN TO AN ELEVATION NO HIGHER THAN EL. 572.0 FT. AND SATISFY THE BEARING CAPACITY OF 50 TONS EACH.
8. THE STEEL PILES SHALL BE GALVANIZED IN ACCORDANCE WITH SECTION 1076 OF THE STANDARD SPECIFICATIONS. FOR GALVANIZING STEEL PILES, SEE SPECIAL PROVISIONS.
9. WHEN DRIVING PILES, THE MAXIMUM BLOW COUNT SHALL NOT BE EXCEEDED.
10. THE REQUIRED BEARING CAPACITY OF THE SPREAD FOOTINGS AT INTERIOR BENT NO. 1 IS 4 TSF. THE REQUIRED BEARING CCAPACITY SHALL BE VERIFIED.
11. CURRENT ADT = 6,800 VPD.
12. DELINEATORS ON BARRIER RAIL AND ON STEEL BEAM GUARDRAIL SHALL BE INCLUDED IN THE PRICE BID FOR STEEL BEAM GUARDRAIL.

◈ GEOTECH BORE HOLES LOCATION

DESCRIPTION OF EXISTING BRIDGE

2 SPANS @ 30'-3"; 3" ASPHALT WEARING SURFACE ON PRECAST PRESTRESSED CONCRETE CHANNELS; PPC CAP END BENTS ON TIMBER PILES; PPC CAP INTERIOR BENT ON CONCRETE ENCASED PILES; 24'-2" CLEAR ROADWAY WIDTH SHALL BE REMOVED.

PROJECT NO. 42821
COUNTY: CABARRUS
STATION: 15+97.50
REPLACES BRIDGE NO. 191

STATE OF NORTH CAROLINA
DEPARTMENT OF TRANSPORTATION
RALEIGH

BRIDGE NO. 191 ON SR 1304
OVER WOLF MEADOW CREEK

Florence & Hutcheson
CONSULTING ENGINEERS
3131 Kingdom Way, Suite 100 Raleigh, NC 27607
NC License No: F-0258

NORTH CAROLINA PROFESSIONAL SEAL 20532 ENGINEER JAMES E. MONDOLFI
12-7-10

REVISIONS						SHEET NO.
NO.	BY	DATE	NO.	BY	DATE	1
1			3			TOTAL SHEETS
2			4			21

DRAWN BY: R.L. MARIOTTE DATE: DEC 2009
CHECKED BY: J.E. MONDOLFI DATE: DEC 2009

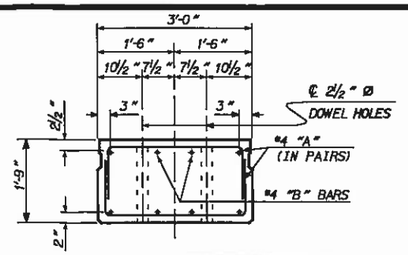

SLAB END ELEVATION

THE 2½" DOWEL HOLES AT FIXED ENDS OF SLAB SECTIONS SHALL BE FILLED WITH GROUT.

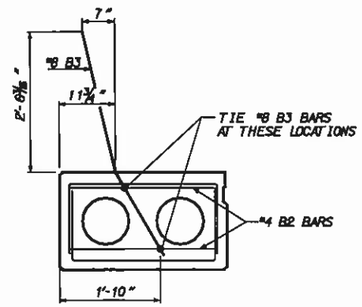

TIE LOCATION FOR #8 B3

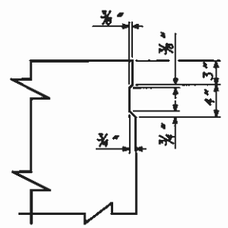

SHEAR KEY DETAIL

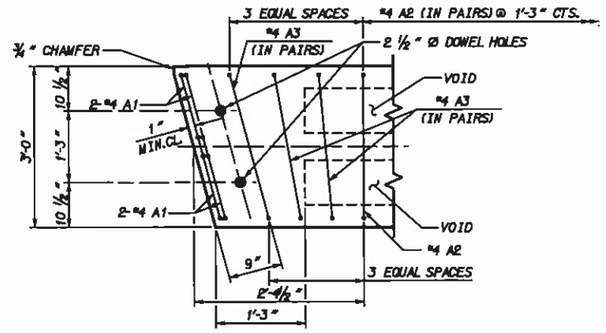

PART PLAN - 35' SLAB

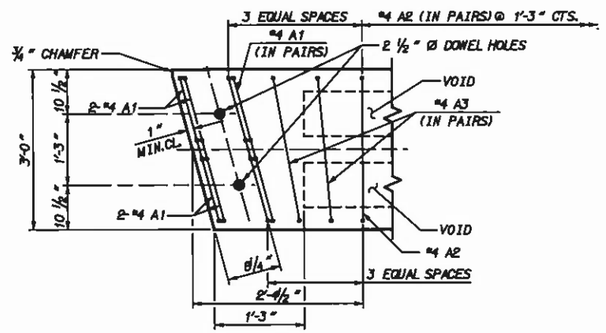

PART PLAN - 60' SLAB

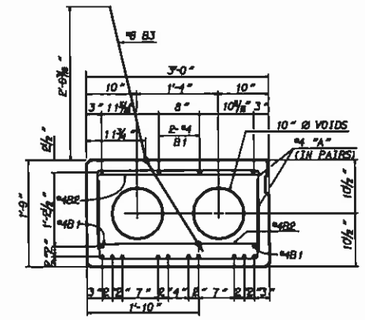

35' SPAN

12 -½" Ø H.S.STRANDS
EXTERIOR SLAB SECTIONS

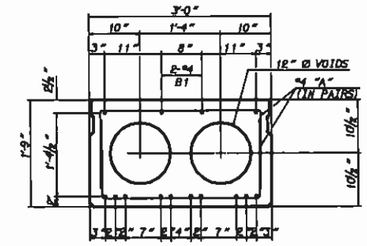

35' SPAN

12 -½" Ø H.S.STRANDS
INTERIOR SLAB SECTIONS

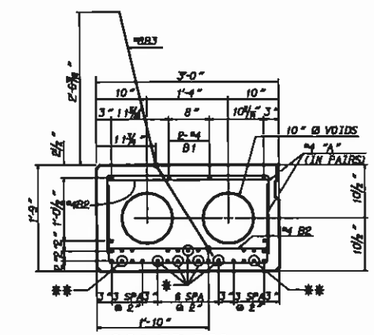

60' SPAN

30 -½" Ø H.S.STRANDS
EXTERIOR SLAB SECTIONS

⊙ STRAND IS SHEATHED. SEE SHEATH CHART.

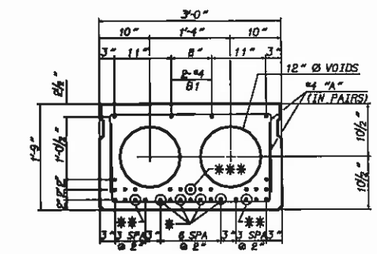

60' SPAN

30 -½" Ø H.S.STRANDS
INTERIOR SLAB SECTIONS

GENERAL NOTES

ASSUMED LIVE LOAD - HS 20-44 OR ALTERNATE LOADING.

CONCRETE: $f'c_o$ = 5000 psi 35' SPAN ONLY
✱ CONCRETE: $f'c_o$ = 4000 psi 35' SPAN ONLY
CONCRETE: $f'c_o$ = 7000 psi 60' SPAN ONLY
✱ CONCRETE: $f'c_o$ = 5000 psi 60' SPAN ONLY

✱ (COMPRESSIVE STRENGTH @ TRANSFER OF STRESSING FORCE.)

ALL PRESTRESS STRANDS SHALL MEET THE REQUIREMENTS OF ASTM A416.

ALL PRESTRESS STRANDS SHALL BE 7 WIRE, LOW RELAXATION, HIGH STRENGTH CABLES IN ACCORDANCE WITH THE SPECIFICATIONS.

SIZE TYPE	AREA	ULTIMATE STR.
1/2" Ø HIGH STR.	0.153 □" PER CABLE	41,300#

APPLIED FORCE
30,980# PER CABLE

STRUCTURAL STEEL ITEMS SHALL BE OF A GRADE CONFORMING TO EITHER ASTM A36 OR A373, EXCEPT HIGH STRENGTH BOLTS. HIGH STRENGTH BOLTS SHALL BE ASTM A325. ALL STRUCTURAL STEEL SHALL BE GALVANIZED AS PER THE SPECIFICATIONS.

ALL MATERIAL AND WORKMANSHIP SHALL COMPLY WITH THE APPLICABLE REQUIREMENTS OF THE STANDARD SPECIFICATIONS FOR ROADS AND STRUCTURES OF THE NC DEPARTMENT OF TRANSPORTATION DATED JULY 2006 AND WITH THE SPECIAL PROVISIONS.

THE ULTIMATE STRENGTH OF THE CORED SLAB UNIT MUST MEET THE REQUIREMENTS OF THE APPLICABLE AASHTO SPECIFICATIONS.

STRANDS SHALL BE CUT FLUSH WITH ENDS OF SLABS.

A POSITIVE HOLD DOWN SYSTEM MUST BE EMPLOYED TO PREVENT VOIDS FROM RISING.

NOTE:
SPIRAL WIRE REINFORCEMENT MAY BE USED IN LEIU OF DEFORMED BARS FOR STIRRUPS. MIN. W3.5 X 6" PITCH.

UNLESS OTHERWISE NOTED ON THE PLANS, ALL EXPOSED CORNERS ON STRUCTURES SHALL BE CHAMFERED ¾".

APPLY EPOXY PROTECTIVE COATING TO THE ENDS OF THE CORED SLAB UNITS.

SHEATH CHART

SPAN LENGTH	NUMBER OF SHEATHED STRANDS PER EXTERIOR SLAB SECTIONS	NUMBER OF SHEATHED STRANDS PER INTERIOR SLAB SECTIONS
60'	✱4 @ 2"	✱4 @ 2"
60'	✱1 @ 4"	✱✱2 @ 2"
60'	✱✱2 @ 2"	✱✱✱1 @ 4"

✱ BOND SHALL BE BROKEN ON THESE STRANDS FOR A DISTANCE OF 4 FEET FROM THE END OF THE SLAB

✱✱ BOND SHALL BE BROKEN ON THESE STRANDS FOR A DISTANCE OF 6 FEET FROM THE END OF THE SLAB

✱✱✱ BOND SHALL BE BROKEN ON THESE STRANDS FOR A DISTANCE OF 12 FEET FROM THE END OF THE SLAB

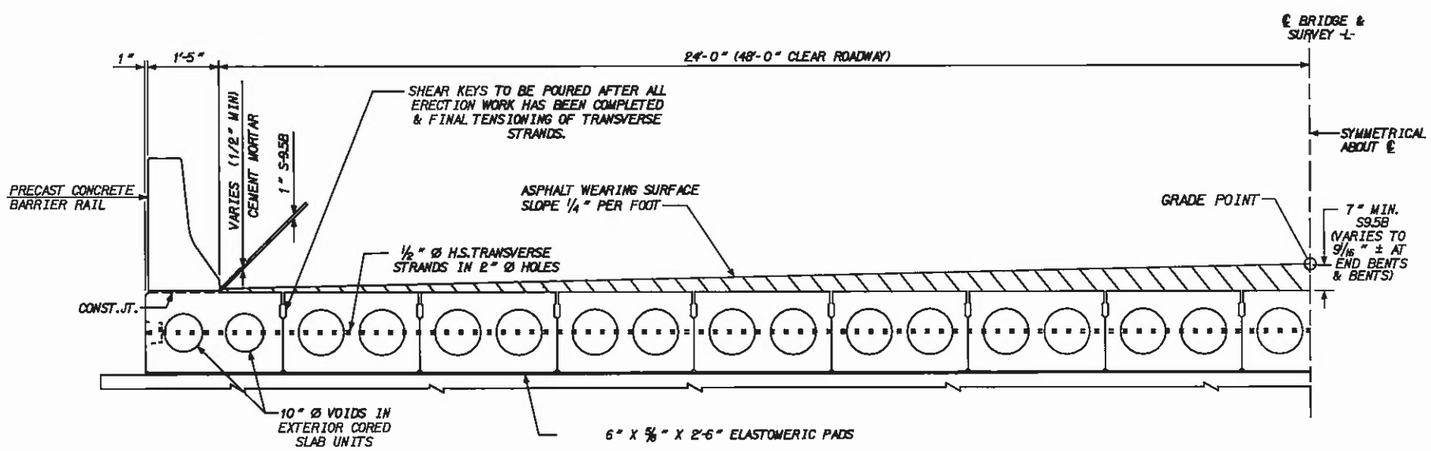

TYPICAL HALF SECTION

NOT TO SCALE

EXTERIOR SLAB UNIT	35'	60'
(SLAB UNIT ALONE IN PLACE)	0.412" (UP)	2.600" (UP)
DEFLECTION (SUPERIMPOSED DEAD LOAD)	0.089 (DOWN)*	0.609 (DOWN)*
FINAL DEFLECTION	0.319" (UP)	1.991" (UP)
* INCLUDES FUTURE WEARING SURFACE		

INTERIOR SLAB UNIT	35'	60'
CAMBER (SLAB UNIT ALONE IN PLACE)	0.471" (UP)	2.970" (UP)
DEFLECTION (SUPERIMPOSED DEAD LOAD)	0.093" (DOWN)*	0.609" (DOWN)*
FINAL DEFLECTION	0.378" (UP)	2.361" (UP)
* INCLUDES FUTURE WEARING SURFACE		

PROJECT NO. 42821
COUNTY: CABARRUS
STATION: 15+97.50
REPLACES BRIDGE NO. 191

STATE OF NORTH CAROLINA
DEPARTMENT OF TRANSPORTATION
RALEIGH

STANDARD PRESTRESSED CORED SLAB
35' AND 60' SPANS
48' CLEAR ROADWAY - 75° SKEW

Florence & Hutcheson
CONSULTING ENGINEERS
3121 Hampton Way, Suite 100 Raleigh, NC 27607
NC License No: F-0258

NORTH CAROLINA PROFESSIONAL SEAL 20537 ENGINEER JAMES E. MONDOLFI
12-7-10

REVISIONS						SHEET NO.
NO.	BY	DATE	NO.	BY	DATE	2
1			3			TOTAL SHEETS
2			4			21

DRAWN BY: B.L. MARIOTTE DATE: DEC 2009
CHECKED BY: J.E. MONDOLFI DATE: DEC 2009

PLOT: 12/7/2010 9:40:22 AM Florence & Hutcheson, Inc.
FILE INFO: p:\ncdot\projects_PE\42821\Preliminary\PL-42-L.dgn

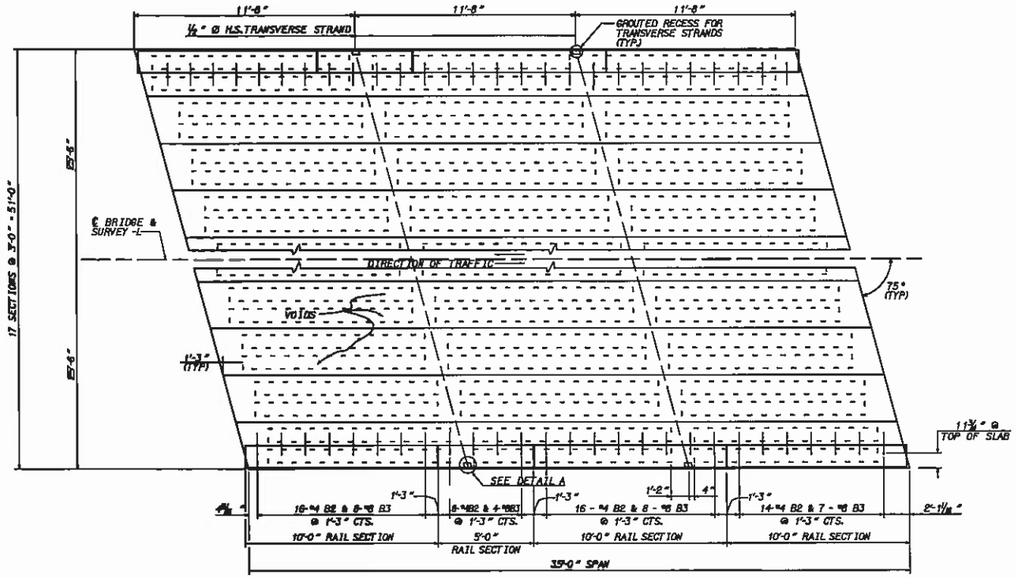

PLAN VIEW - 35' SPAN

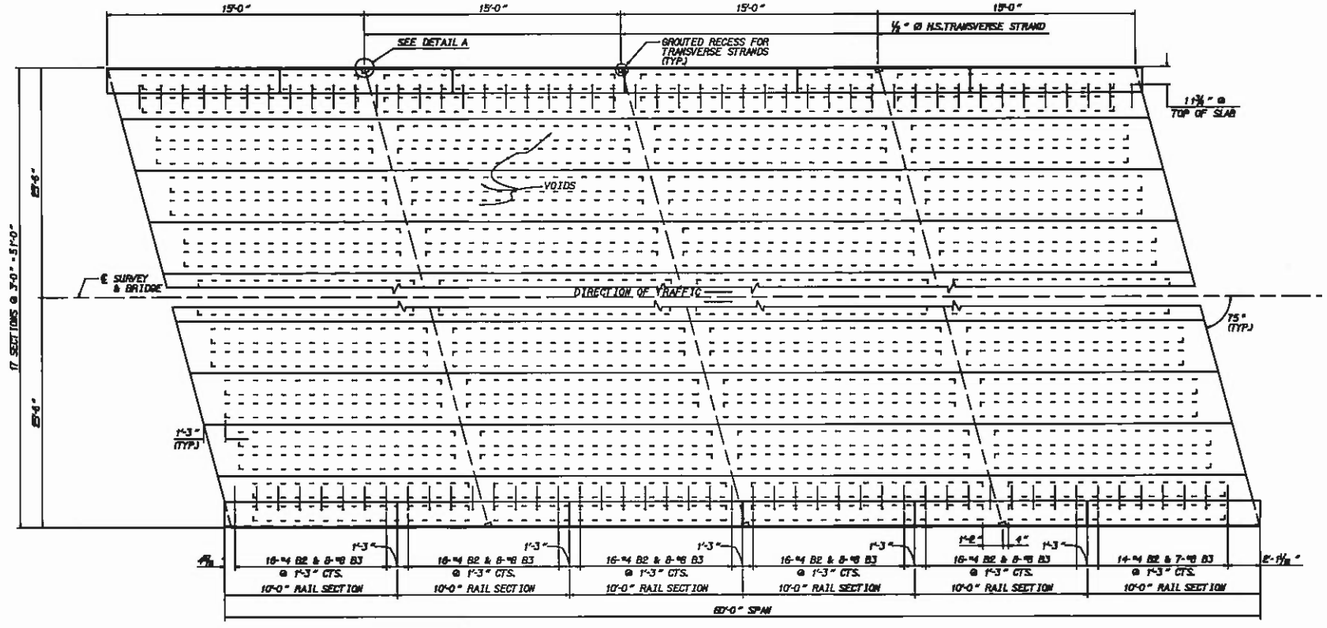

PLAN VIEW - 60' SPAN

BILL OF MATERIAL FOR ONE 35'-0" INTERIOR CORED SLAB SECTION					
BAR	NO.	SIZE	TYPE	LENGTH	WEIGHT
B1	4	#4	STR	18'-3"	49
A1	8	#4	1	4'-8"	25
A2	62	#4	1	5'-4"	221
A3	8	#4	1	5'-5"	29
REINFORCING STEEL				LBS.	324
5000 P.S.I. CONCRETE				C.Y.	4.8
0.5" Ø L.R. STRANDS				NO.	12

BILL OF MATERIAL FOR ONE 60'-0" INTERIOR CORED SLAB SECTION					
BAR	NO.	SIZE	TYPE	LENGTH	WEIGHT
B1	4	#4	STR	30'-9"	82
A1	16	#4	1	4'-8"	50
A2	112	#4	1	5'-4"	399
A3	8	#4	1	5'-5"	29
REINFORCING STEEL				LBS.	560
7000 P.S.I. CONCRETE				C.Y.	8.7
0.5" Ø L.R. STRANDS				NO.	30

BILL OF MATERIAL FOR ONE 35'-0" EXTERIOR CORED SLAB SECTION					
BAR	NO.	SIZE	TYPE	LENGTH	WEIGHT
B1	8	#4	STR	18'-3"	98
B2	54	#4	STR	2'-8"	96
* B3	27	#8	2	4'-5"	318
A1	8	#4	1	4'-8"	25
A2	62	#4	1	5'-4"	221
A3	8	#4	1	5'-5"	29
REINFORCING STEEL				LBS.	469
* EPOXY COATED REINFORCING STEEL				LBS.	318
5000 P.S.I. CONCRETE				C.Y.	5.3
0.5" Ø L.R. STRANDS				NO.	12

BILL OF MATERIAL FOR ONE 60'-0" EXTERIOR CORED SLAB SECTION					
BAR	NO.	SIZE	TYPE	LENGTH	WEIGHT
B1	4	#4	STR	30'-9"	82
B2	94	#4	STR	2'-8"	167
* B3	47	#8	2	4'-5"	554
A1	16	#4	1	4'-8"	50
A2	112	#4	1	5'-4"	399
A3	8	#4	1	5'-5"	29
REINFORCING STEEL				LBS.	727
* EPOXY COATED REINFORCING STEEL				LBS.	554
7000 P.S.I. CONCRETE				C.Y.	9.2
0.5" Ø L.R. STRANDS				NO.	30

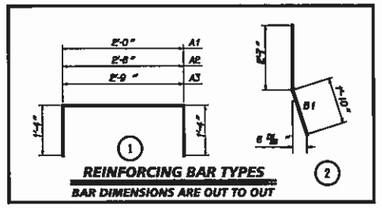

REINFORCING BAR TYPES
BAR DIMENSIONS ARE OUT TO OUT

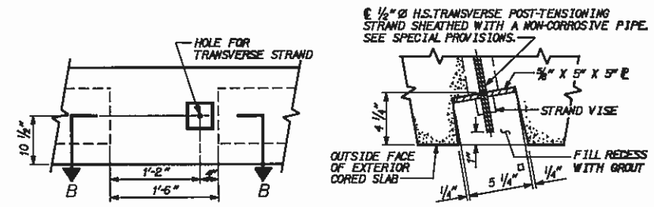

DETAIL "A"
GROUTED RECESS AT END OF POST-TENSIONED STRAND CORED SLABS

PROJECT NO. 42821
COUNTY: CABARRUS
STATION: 15+97.50
REPLACES BRIDGE NO. 191

STATE OF NORTH CAROLINA
DEPARTMENT OF TRANSPORTATION
RALEIGH

STANDARD PRECAST CORED SLAB
35' AND 60' SPANS
48' CLEAR ROADWAY – 75° SKEW

Florence & Hutcheson
CONSULTING ENGINEERS
5131 Kingdom Way, Suite 100 Raleigh, NC 27607
NC License No: F-0268

NORTH CAROLINA PROFESSIONAL SEAL 20532 ENGINEER JAMES E. MONDOLFI
12-7-10

REVISIONS						SHEET NO.
NO.	BY	DATE	NO.	BY	DATE	3
1			3			TOTAL SHEETS
2			4			21

DRAWN BY: R.L. MARIOTTE DATE: DEC 2009
CHECKED BY: J.E. MONDOLFI DATE: DEC 2009

NOT TO SCALE

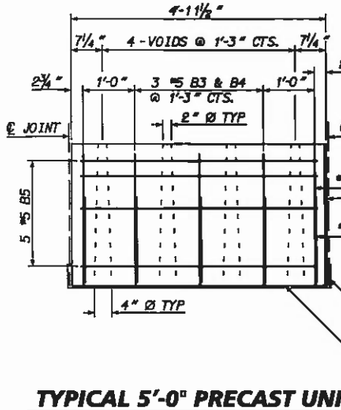

TYPICAL 5'-0" PRECAST UNIT

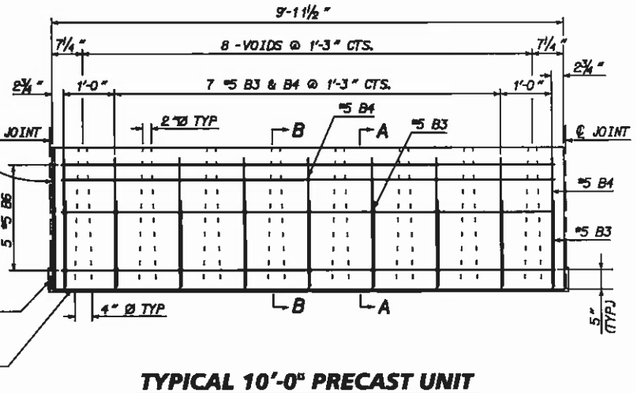

TYPICAL 10'-0" PRECAST UNIT

BILL OF MATERIAL FOR ONE 5'-0" RAIL SECTION					
BAR	NO.	SIZE	TYPE	LENGTH	WEIGHT
B3	5	#5	1	4'-11"	26
B4	5	#5	2	2'-8"	14
B5	5	#5	STR	4'-7"	24
REINFORCING STEEL LBS. = 64					
CLASS AA CONCRETE CU. YDS. = 0.5					

BILL OF MATERIAL FOR ONE 10'-0" RAIL SECTION					
BAR	NO.	SIZE	TYPE	LENGTH	WEIGHT
B3	9	#5	1	4'-11"	46
B4	9	#5	2	2'-8"	25
B6	5	#5	STR	9'-7"	50
REINFORCING STEEL LBS. = 121					
CLASS AA CONCRETE CU. YDS. = 1.0					

NOTES

EACH PRECAST RAIL UNIT SHALL BE CAST WITH CLASS AA CONCRETE.

EACH PRECAST RAIL UNIT SHALL BE SUPPLIED WITH LIFTING DEVICE(S). NO CABLES ARE TO BE WRAPPED AROUND THE RAIL UNITS FOR LIFTING.

℄ RAIL TO BE FLUSH WITH ENDS OF CORED SLAB UNITS AT EACH END OF SPAN.

THE JOINT SEALER SHALL BE LOW MODULUS SILICONE SEALANT. SEE SECTION 1028-4 OF THE STANDARD SPECIFICATIONS.

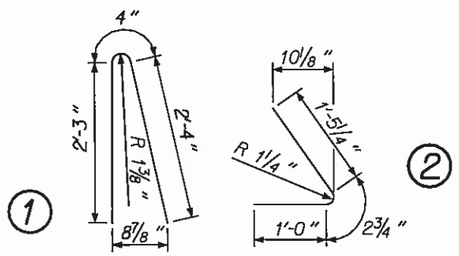

REINFORCING BAR TYPES
BAR DIMENSIONS ARE OUT TO OUT

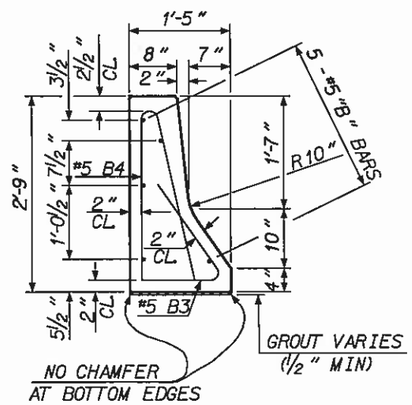

SECTION A-A

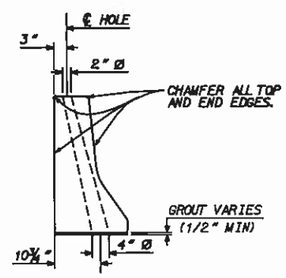

SECTION B-B

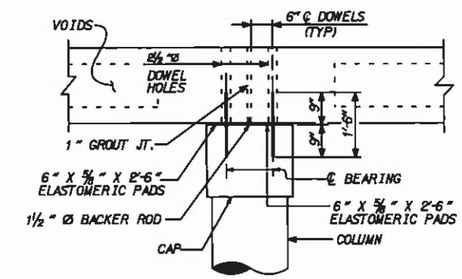

SECTION AT BENT

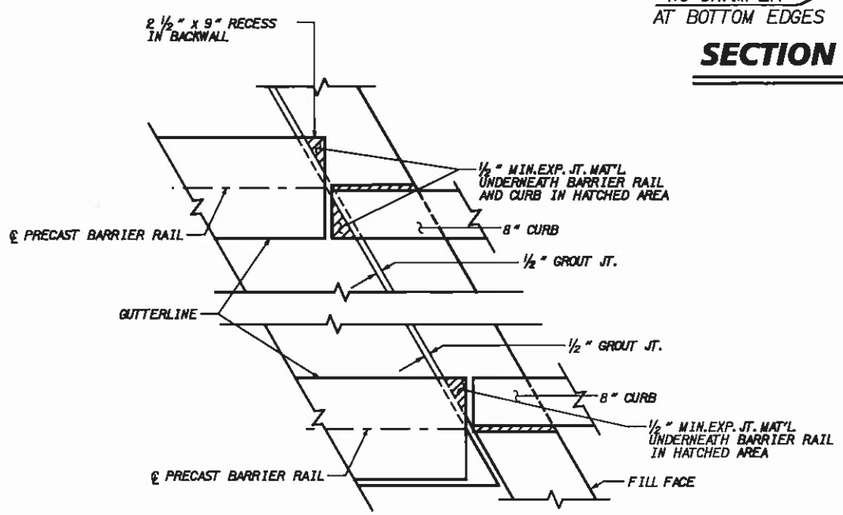

PLAN OF BARRIER RAIL AND CURB
CORED SLAB AT END BENTS

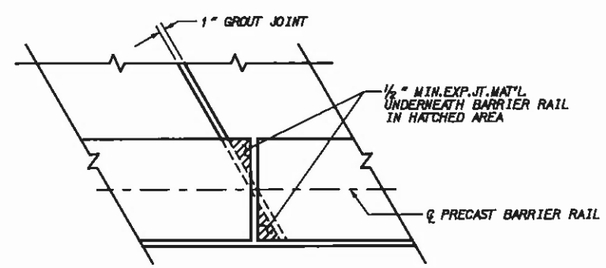

PLAN OF BARRIER RAIL
CORED SLAB AT BENT #1

NOT TO SCALE

PROJECT NO. 42821
COUNTY: CABARRUS
STATION: 15+97.50
REPLACES BRIDGE NO. 191

STATE OF NORTH CAROLINA
DEPARTMENT OF TRANSPORTATION
RALEIGH

STANDARD PRECAST CONCRETE
BARRIER RAIL SECTIONS
35' AND 60' SPANS
48' CLEAR ROADWAY – 75° SKEW

Florence & Hutcheson
CONSULTING ENGINEERS
5131 Kingdom Way, Suite 100 Raleigh, NC 27607
NC License No: F-0258

NORTH CAROLINA PROFESSIONAL SEAL 20532 ENGINEER JAMES E. MONDOLFI
12-7-10

REVISIONS						SHEET NO. 4
NO.	BY	DATE	NO.	BY	DATE	TOTAL SHEETS 21
1			3			
2			4			

DRAWN BY: B.L. MARIOTTE DATE: DEC 2009
CHECKED BY: J.E. MONDOLFI DATE: DEC 2009

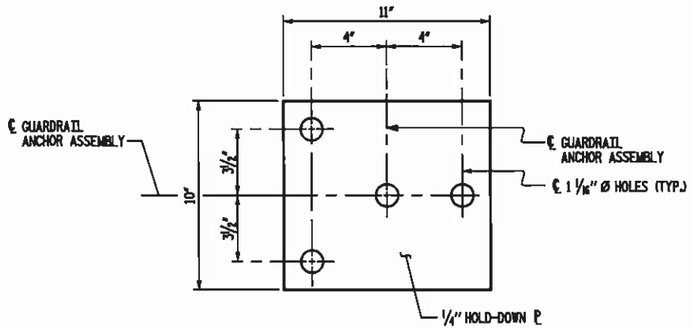

PLAN

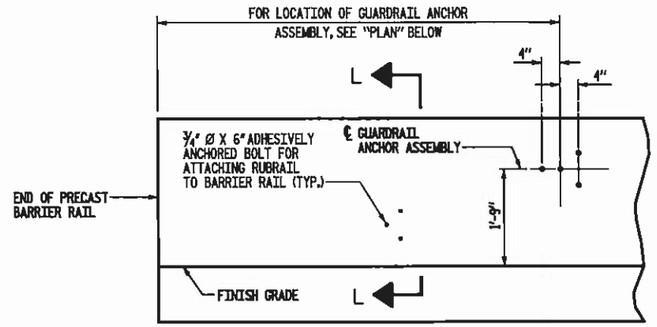

ELEVATION

FOR LOCATION OF RUBRAIL, SEE ROADWAY STD. 862.03

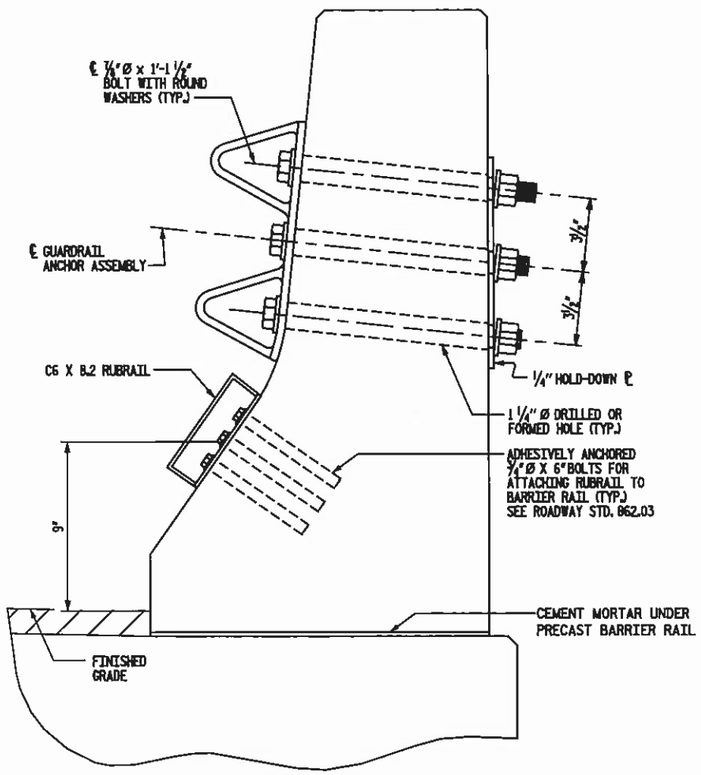

SECTION L-L

GUARDRAIL ANCHOR ASSEMBLY DETAILS

FOR CONCRETE BARRIER RAIL ONLY
(FOR LOCATION OF GUARDRAIL ANCHOR ASSEMBLY, SEE THIS SHEET)

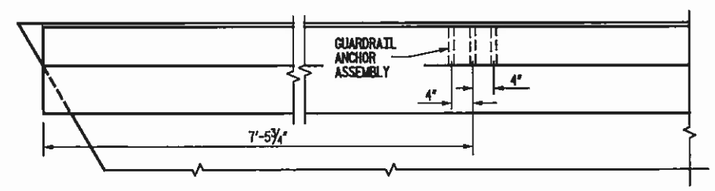

PLAN

LOCATION OF ANCHORS FOR GUARDRAIL

FOR CONCRETE BARRIER RAIL ONLY
END BENT #1 SHOWN, END BENT #2 SIMILAR

NOTES

THE GUARDRAIL ANCHOR ASSEMBLY SHALL CONSIST OF A 1/4" HOLD DOWN PLATE AND 7/8" Ø BOLTS WITH NUTS AND WASHERS, RUBRAIL, AND ADHESIVELY ANCHORED BOLTS.

THE HOLD-DOWN PLATE SHALL CONFORM TO AASHTO M270 GRADE 36. AFTER FABRICATION, THE HOLD-DOWN PLATE SHALL BE HOT-DIP GALVANIZED IN ACCORDANCE WITH AASHTO M111.

BOLTS SHALL CONFORM TO THE REQUIREMENTS OF ASTM A307 AND NUTS SHALL CONFORM TO THE REQUIREMENTS OF AASHTO M291. BOLTS, NUTS AND WASHERS SHALL BE GALVANIZED. (AT THE CONTRACTOR'S OPTION, STAINLESS STEEL BOLTS, NUTS AND WASHERS MAY BE USED AS AN ALTERNATE FOR THE 7/8" Ø GALVANIZED BOLTS, NUTS AND WASHERS. THEY SHALL CONFORM TO OR EXCEED THE MECHANICAL REQUIREMENTS OF ASTM A307. THE USE OF THIS ALTERNATE SHALL BE APPROVED BY THE ENGINEER.)

THE GUARDRAIL ANCHOR ASSEMBLY IS REQUIRED AT ALL POINTS WHERE APPROACH GUARDRAIL IS TO BE ATTACHED TO THE END OF CONCRETE BARRIER RAIL OR CONCRETE END POSTS. FOR POINTS OF ATTACHMENT, SEE SKETCH.

AFTER INSTALLATION, THE EXPOSED THREAD OF THE BOLT SHALL BE BURRED WITH A SHARP POINTED TOOL.

THE COST OF THE GUARDRAIL ANCHOR ASSEMBLY SHALL BE INCLUDED IN THE UNIT CONTRACT PRICE BID FOR GUARDRAIL ANCHOR UNIT, TYPE B-77.

THE 1 1/4" Ø HOLES SHALL BE FORMED OR DRILLED WITH A CORE BIT. IMPACT TOOLS WILL NOT BE PERMITTED. ANY CONCRETE DAMAGED BY THIS WORK SHALL BE REPAIRED TO THE SATISFACTION OF THE ENGINEER.

THE C6 X 8.2 RUBRAIL IS TO BE ADHESIVELY ANCHORED TO THE RAIL USING THREE 3/4" Ø X 6" BOLTS WITH WASHERS. LEVEL ONE FIELD TESTING IS REQUIRED, AND THE YIELD LOAD OF THE 3/4" Ø BOLT IS 12 KIPS. FOR ADHESIVELY ANCHORED ANCHOR BOLTS OR DOWELS, SEE SPECIAL PROVISIONS. SEE ROADWAY STANDARD 862.03 FOR DETAILS AND LOCATION OF THE RUBRAIL.

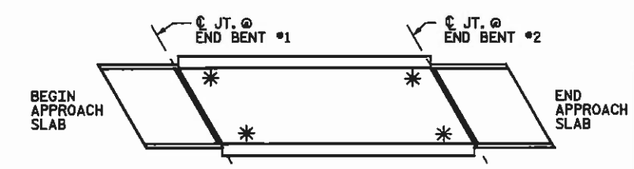

SKETCH SHOWING POINTS OF ATTACHMENT

✱ INDICATES POINTS OF ATTACHMENT

PROJECT NO. 42821
COUNTY: CABARRUS
STATION: 15+97.50
REPLACES BRIDGE NO. 191

STATE OF NORTH CAROLINA
DEPARTMENT OF TRANSPORTATION
RALEIGH

SUPERSTRUCTURE
GUARDRAIL ANCHORAGE
DETAILS

Florence & Hutcheson
CONSULTING ENGINEERS
5131 Kingdom Way, Suite 100 Raleigh, NC 27607
NC License No. F-0258

NORTH CAROLINA PROFESSIONAL SEAL 20532 JAMES E. MONDOLFI
12-7-10

REVISIONS						SHEET NO.
NO.	BY	DATE	NO.	BY	DATE	5
1			3			TOTAL SHEETS
2			4			21

NOT TO SCALE

DRAWN BY: B.L. MARIOTTE DATE: DEC 2009
CHECKED BY: J.E. MONDOLFI DATE: DEC 2009

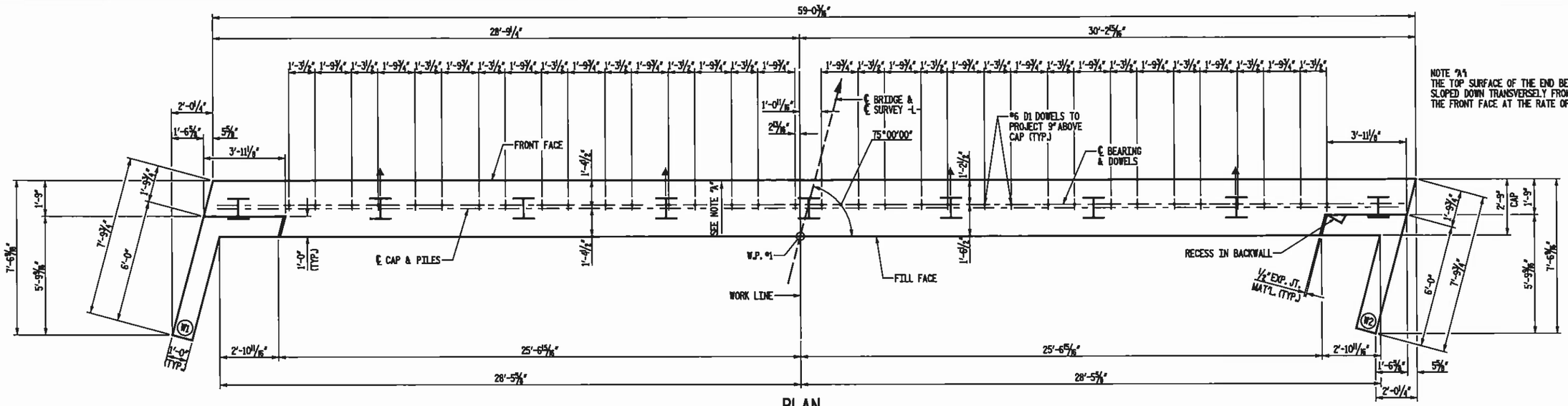

NOTE "A"
THE TOP SURFACE OF THE END BENT CAP SHALL BE SLOPED DOWN TRANSVERSELY FROM THE FILL FACE TO THE FRONT FACE AT THE RATE OF 0.012 FT PER FOOT.

PLAN

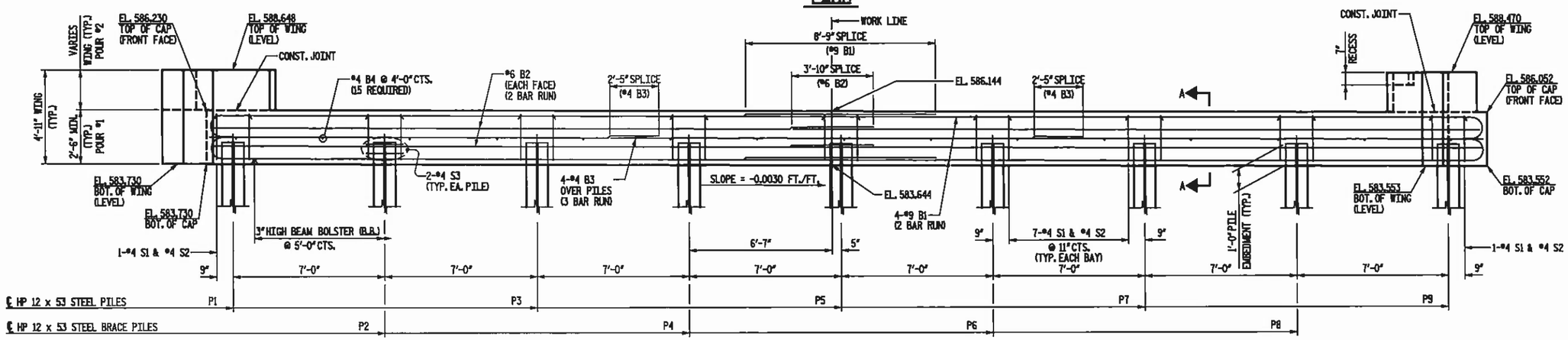

ELEVATION

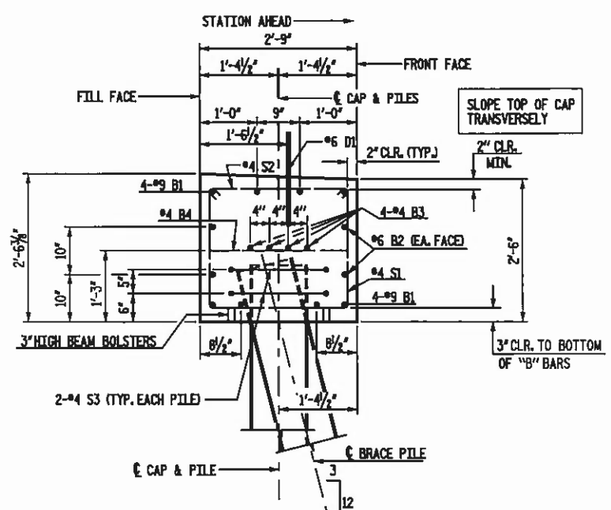

SECTION A-A

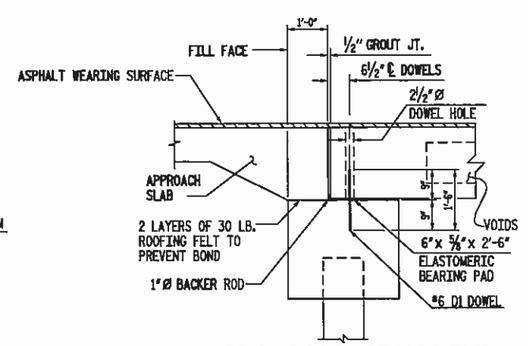

DOWEL LOCATION DETAIL

NOTE: ℄ OF DOWELS SHALL MATCH ℄ OF DOWEL HOLES IN CORED SLAB UNITS.

TOP OF PILE ELEVATIONS	
PILE	ELEVATION
P1	584.728
P2	584.707
P3	584.686
P4	584.665
P5	584.644
P6	584.623
P7	584.602
P8	584.581
P9	584.559

NOTE:

STIRRUPS IN CAP MAY BE SHIFTED SLIGHTLY AS NECESSARY TO CLEAR DOWELS.

INDICATES BRACE PILE (BATTER: 3:12)

NOT TO SCALE

PROJECT NO. 42821
COUNTY: CABARRUS
STATION: 15+97.50
REPLACES BRIDGE NO. 191

STATE OF NORTH CAROLINA
DEPARTMENT OF TRANSPORTATION
RALEIGH

CAST - IN - PLACE
END BENT NO. 1

Florence & Hutcheson
CONSULTING ENGINEERS
5121 Kingdom Way, Suite 100 Raleigh, NC 27607
NC License No: F-0258

NORTH CAROLINA PROFESSIONAL SEAL 20532 ENGINEER
12-7-10

REVISIONS						SHEET NO. 6
NO.	BY	DATE	NO.	BY	DATE	TOTAL SHEETS
1			3			21
2			4			

DRAWN BY: B.L. MARIOTTE DATE: DEC 2009
CHECKED BY: J.C. KO DATE: DEC 2009

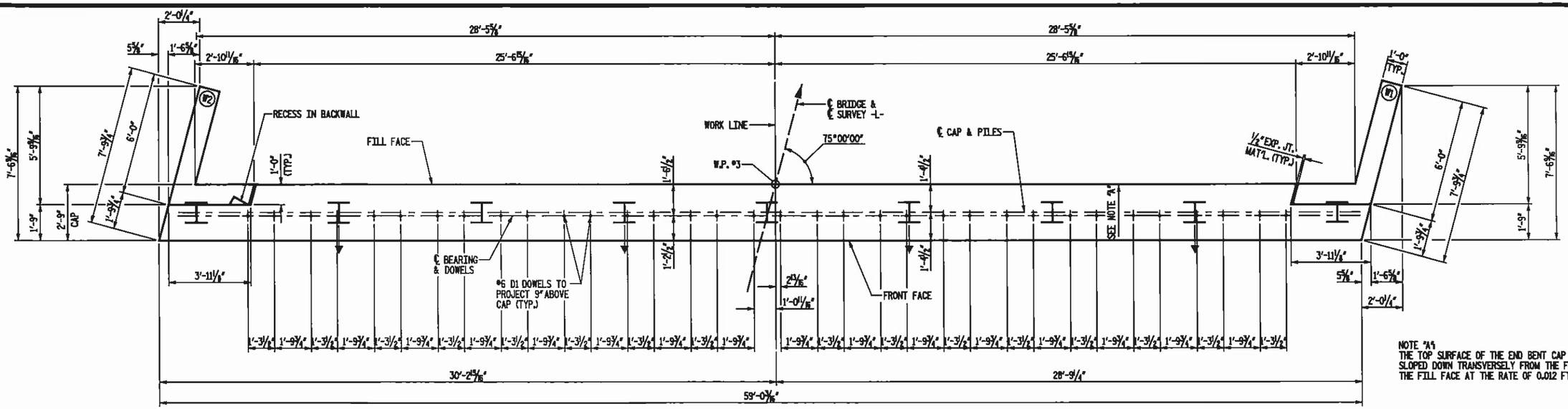

NOTE "A"
THE TOP SURFACE OF THE END BENT CAP SHALL BE SLOPED DOWN TRANSVERSELY FROM THE FRONT FACE TO THE FILL FACE AT THE RATE OF 0.012 FT PER FOOT.

PLAN

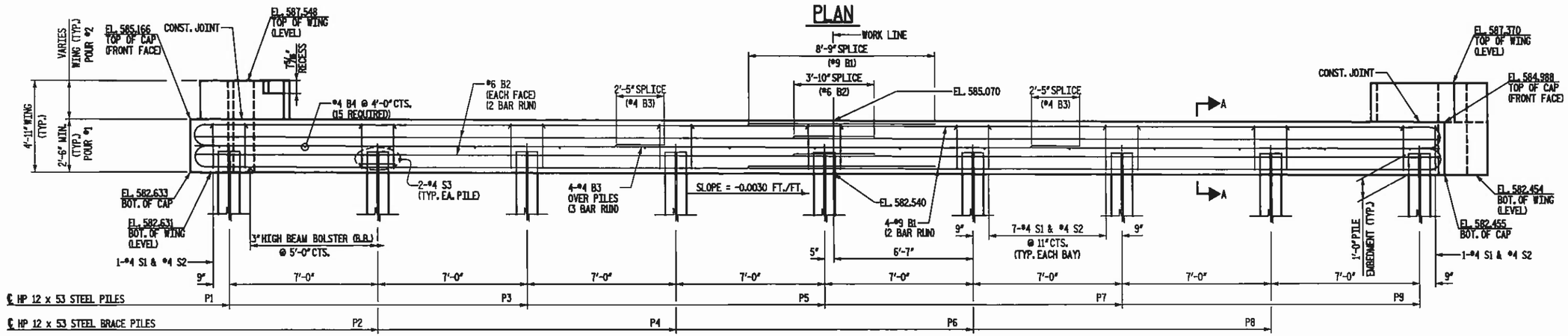

ELEVATION

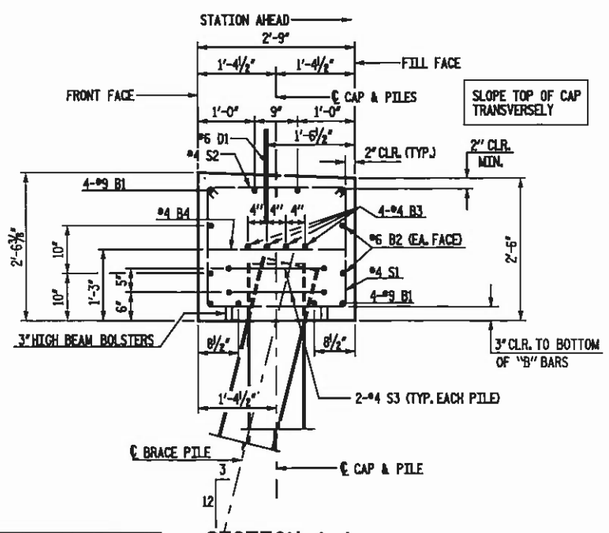

SECTION A-A

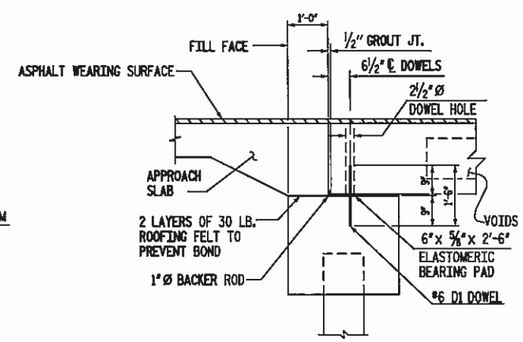

DOWEL LOCATION DETAIL

NOTE: ℄ OF DOWELS SHALL MATCH ℄ OF DOWEL HOLES IN CORED SLAB UNITS.

TOP OF PILE ELEVATIONS	
PILE	ELEVATION
P1	583.629
P2	583.607
P3	583.586
P4	583.565
P5	583.544
P6	583.523
P7	583.502
P8	583.481
P9	583.460

NOTE:
STIRRUPS IN CAP MAY BE SHIFTED SLIGHTLY AS NECESSARY TO CLEAR DOWELS.

INDICATES BRACE PILE (BATTER: 3:12)

NOT TO SCALE

PROJECT NO. 42821
COUNTY: CABARRUS
STATION: 15+97.50
REPLACES BRIDGE NO. 191

STATE OF NORTH CAROLINA
DEPARTMENT OF TRANSPORTATION
RALEIGH

CAST - IN - PLACE
END BENT NO. 2

Florence & Hutcheson
CONSULTING ENGINEERS
5121 Kingdom Way, Suite 100 Raleigh, NC 27607
NC License No: F-0258

NORTH CAROLINA PROFESSIONAL SEAL 20532 ENGINEER
12-7-10

REVISIONS						SHEET NO.
NO.	BY	DATE	NO.	BY	DATE	7
1			3			TOTAL SHEETS
2			4			21

DRAWN BY: B.L. MARIOTTE DATE: DEC 2009
CHECKED BY: J.E. MONDOLFI DATE: DEC 2009

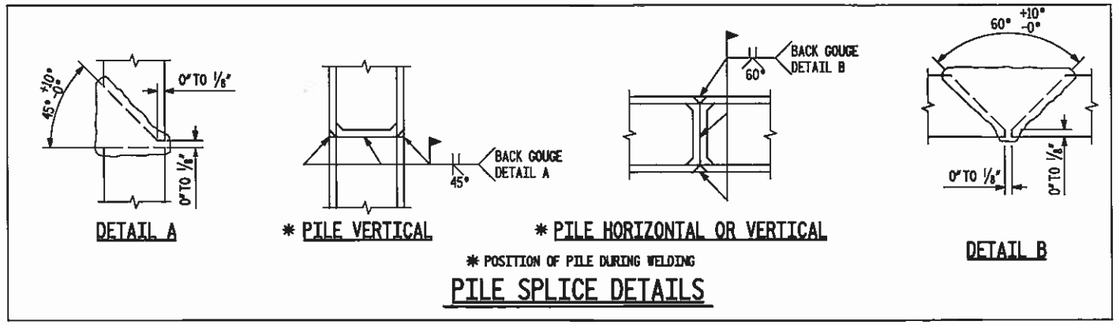

PILE SPLICE DETAILS

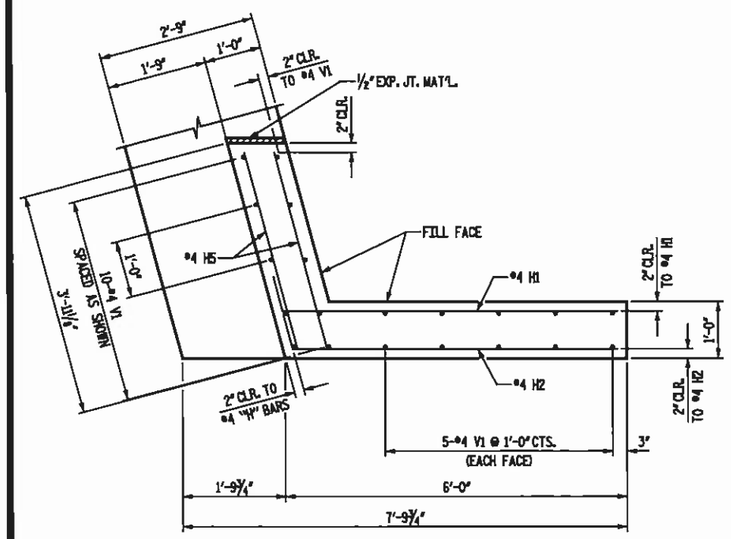

PLAN OF WING - W1

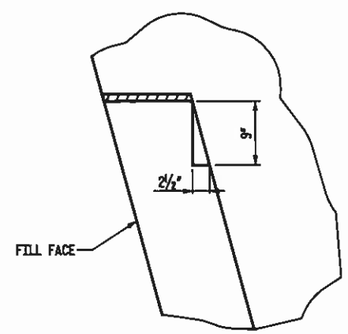

DETAIL OF RECESS IN TOP OF BACKWALL AT WING W2

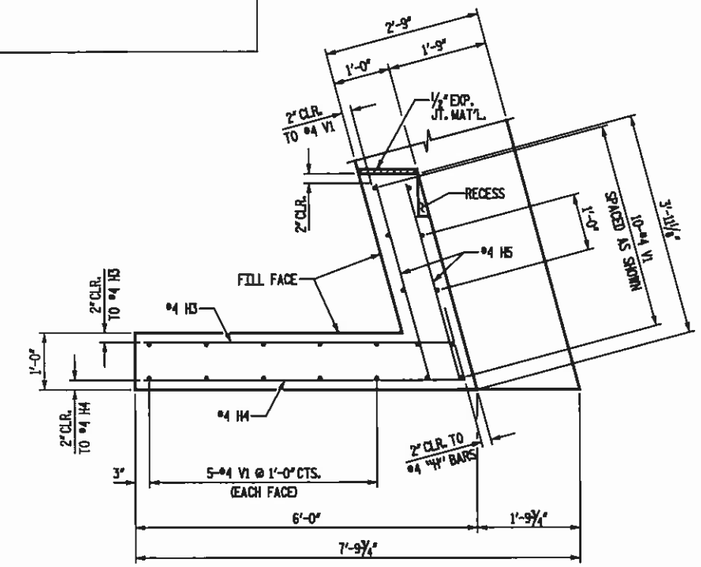

PLAN OF WING - W2

NOTE: SHIFT, FIELD BEND OR CUT REINFORCING STEEL AS NECESSARY TO CLEAR RECESS IN TOP OF BACKWALL.

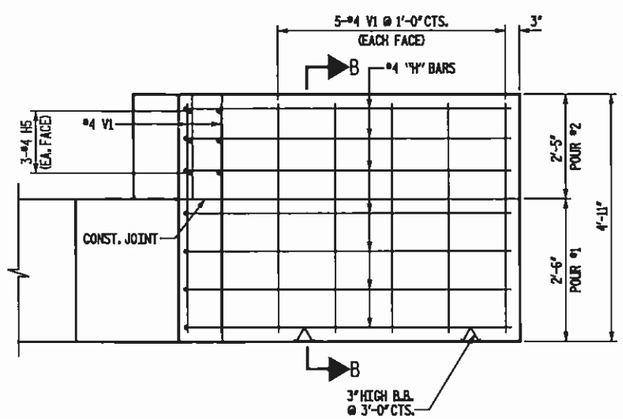

ELEVATION OF WING - W1

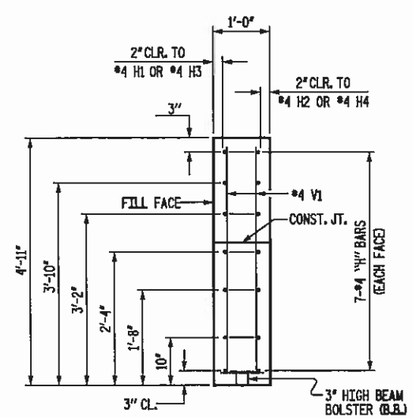

SECTION B-B

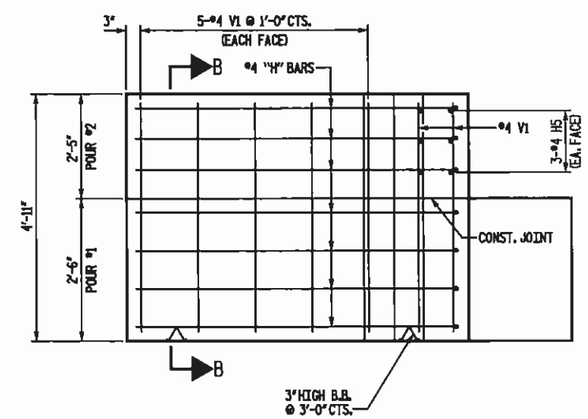

ELEVATION OF WING - W2

BILL OF MATERIAL

ONE END BENT (2 REQUIRED)

BAR	NO.	SIZE	TYPE	LENGTH	WEIGHT
B1	16	9	1	35'-0"	1904
B2	8	6	STR	31'-3"	376
B3	12	4	STR	21'-2"	170
B4	15	4	STR	2'-5"	24
D1	34	6	STR	1-6"	77
H1	7	4	5	6'-6"	30
H2	7	4	5	6'-4"	30
H3	7	4	6	6'-1"	28
H4	7	4	6	6'-3"	29
H5	12	4	STR	3'-6"	28
S1	58	4	3	7'-5"	287
S2	58	4	2	3'-2"	123
S3	18	4	4	6'-6"	78
V1	40	4	STR	4'-7"	122

REINFORCING STEEL TOTAL 3,306 LBS.

CLASS "A" CONCRETE

POUR 1	16.0 CYS.
POUR 2	1.6 CYS.
TOTAL	17.6 CYS.

BAR TYPES

ALL BAR DIMENSIONS ARE OUT TO OUT

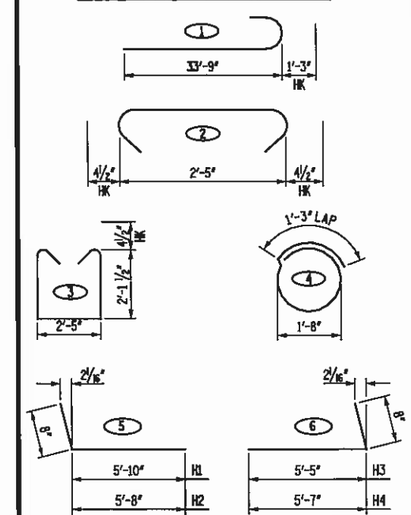

PROJECT NO. 42821
COUNTY: CABARRUS
STATION: 15+97.50
REPLACES BRIDGE NO. 191

STATE OF NORTH CAROLINA
DEPARTMENT OF TRANSPORTATION
RALEIGH

CAST - IN - PLACE
END BENT DETAILS

NOT TO SCALE

Florence & Hutcheson
CONSULTING ENGINEERS
3121 Kingdom Way, Suite 100 Raleigh, NC 27607
NC License No: F-0368

NORTH CAROLINA PROFESSIONAL SEAL 20532 JAMES E. NONDOROF
12-7-10

DRAWN BY: R.L. MARIOTTE DATE: DEC 2009
CHECKED BY: J.C. KO DATE: DEC 2009

REVISIONS						SHEET NO.
NO.	BY	DATE	NO.	BY	DATE	8
1			3			TOTAL SHEETS
2			4			21

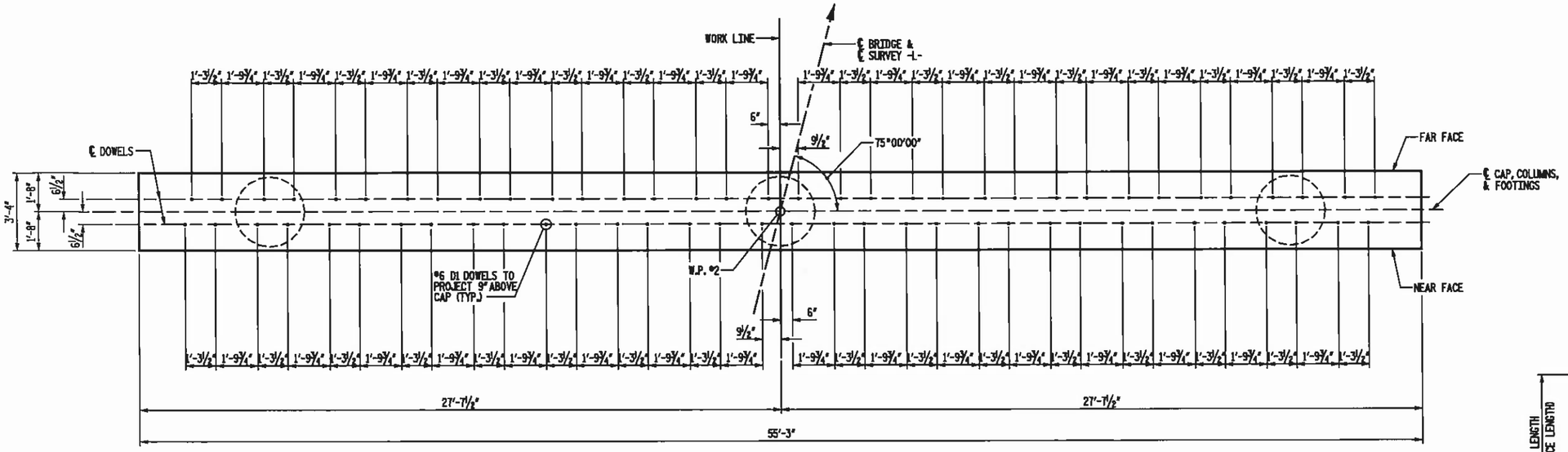

PLAN

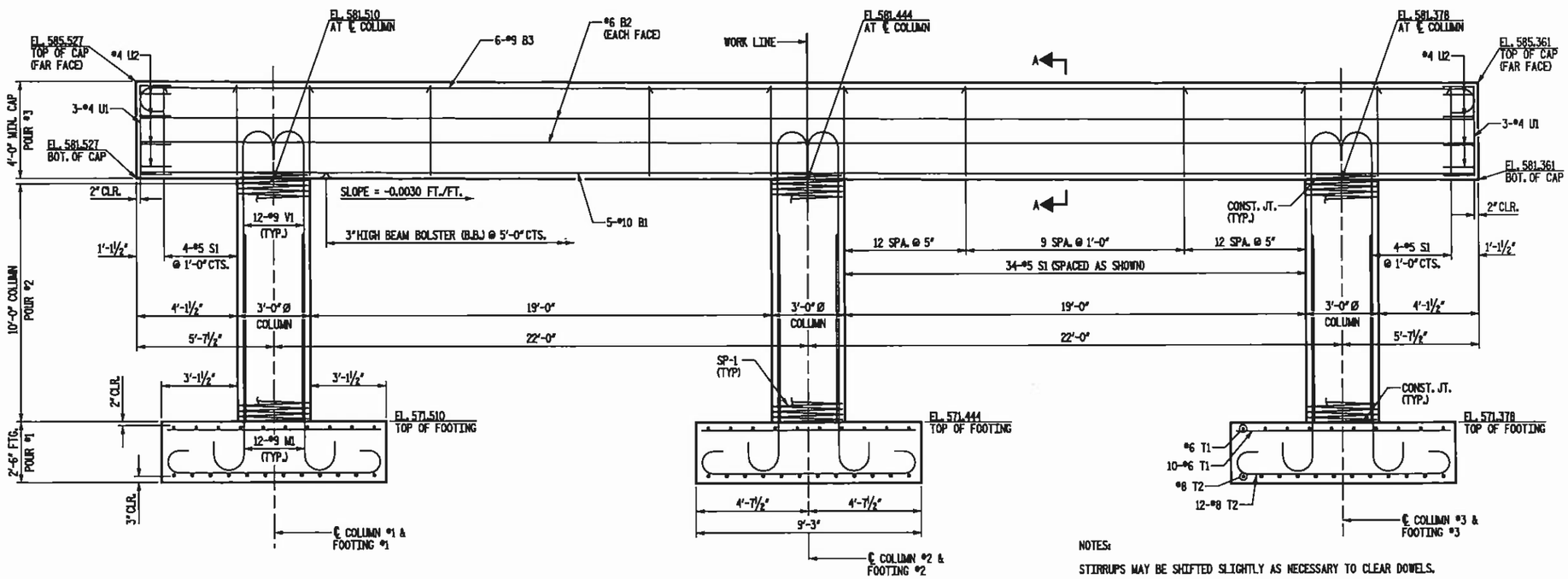

INVERT ALTERNATE #5 S1 STIRRUPS.

ELEVATION

DETAILS SHOWN FOR FOOTINGS ARE TYPICAL.

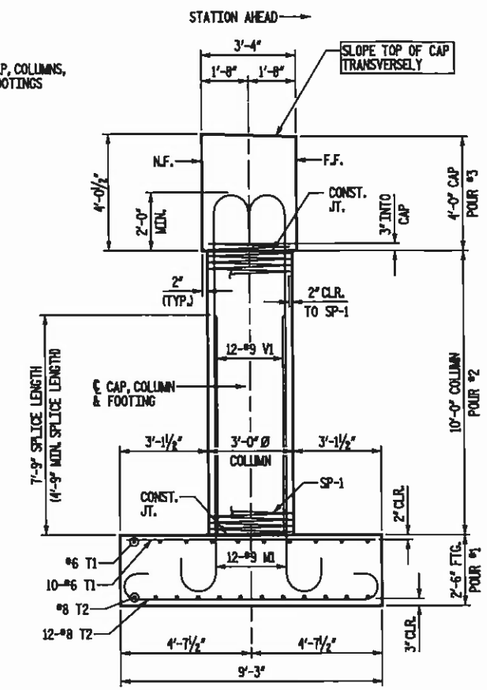

END ELEVATION

NOTES:

STIRRUPS MAY BE SHIFTED SLIGHTLY AS NECESSARY TO CLEAR DOWELS.

HOOKS ON "V" BARS MAY BE TURNED AS NECESSARY FOR PLACING REINFORCING STEEL.

THE CONTRACTOR'S ATTENTION IS CALLED TO THE FACT THAT THE LONGITUDINAL REINFORCEMENT FOR THE COLUMNS IS DETAILED WITH 3 FEET OF EXTRA LENGTH

NOT TO SCALE

PROJECT NO. 42821
COUNTY: CABARRUS
STATION: 15+97.50
REPLACES BRIDGE NO. 191

STATE OF NORTH CAROLINA
DEPARTMENT OF TRANSPORTATION
RALEIGH

CAST – IN – PLACE
INTERIOR BENT #1
48' CLEAR ROADWAY – 75° SKEW

Florence & Hutcheson
CONSULTING ENGINEERS
5121 Kingdom Way, Suite 100 Raleigh, NC 27607
NC License No: F-0258

NORTH CAROLINA PROFESSIONAL SEAL 20532 ENGINEER
12-7-10

REVISIONS						SHEET NO.
NO.	BY	DATE	NO.	BY	DATE	9
1			3			TOTAL SHEETS
2			4			21

DRAWN BY: B.L. MARIOTTE DATE: DEC 2009
CHECKED BY: J.C. KO DATE: DEC 2009

PLOT: 12/7/2010 BaCAD 04 Florence & Hutcheson, Inc.
FILE NAME: p:\cons\dot\florence_ft\42821\structure\15_247_ft.dgn

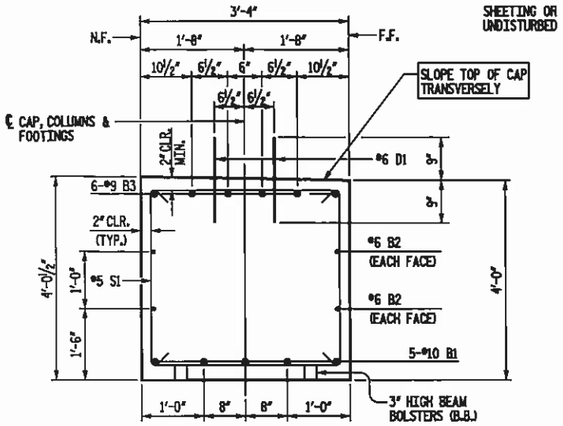

SECTION A-A

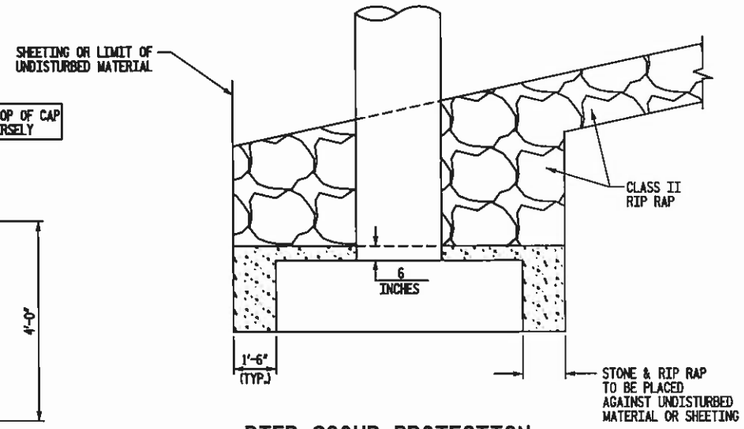

PIER SCOUR PROTECTION

NOTES FOR SUBSTRUCTURE SCOUR PROTECTION

SUBSTRUCTURE SCOUR PROTECTION SHALL BE PROVIDED AS INDICATED IN THE PLANS. THE TWO TO SIX INCH SIZE STONE SHALL BE PLACED AFTER FOOTING FORMWORK HAS BEEN REMOVED AND WHILE THE EXCAVATION IS DEWATERED. THE RIP RAP STONE SHALL BE PLACED BEFORE COFFERDAM SHEETING IS REMOVED, EITHER BEFORE OR AFTER THE EXCAVATION IS ALLOWED TO FLOOD. WHEN NO SHEETING IS USED, EACH STONE TYPE SHALL BE PLACED TO THE REQUIRED THICKNESS AND SHALL EXTEND HORIZONTALLY TO THE UNDISTURBED MATERIAL.

THE TWO TO SIX INCH SIZE SCOUR PROTECTION STONE SHALL BE HARD AND DURABLE IN NATURE. WHILE NO SPECIFIC GRADATION IS REQUIRED THE VARIOUS SIZES OF STONE SHALL BE REASONABLY EQUALLY DISTRIBUTED WITHIN THE REQUIRED SIZE RANGE. THE STONE SHALL BE ESSENTIALLY CUBICAL IN SHAPE.

THE COST OF THE ABOVE WORK INCLUDING THE TWO TO SIX INCH SIZE STONE, MATERIALS, EQUIPMENT, TOOLS, LABOR AND INCIDENTALS NECESSARY TO COMPLETE THE WORK SHALL BE INCLUDED IN THE LUMP SUM PRICE BID FOR PLACEMENT OF SUBSTRUCTURE. CLASS II RIP RAP SHALL BE PAID FOR AT THE UNIT PRICE BID FOR CLASS II RIP RAP PER TON. FOUNDATION EXCAVATION COST SHALL BE INCLUDED IN THE LUMP SUM PRICE FOR EXCAVATION AND EMBANKMENT.

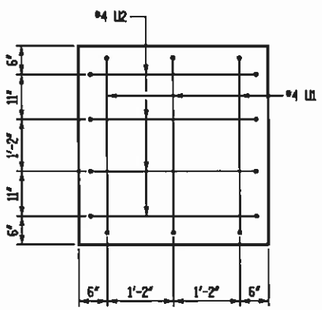

CAP END VIEW

BAR TYPES

ALL BAR DIMENSIONS ARE OUT TO OUT.

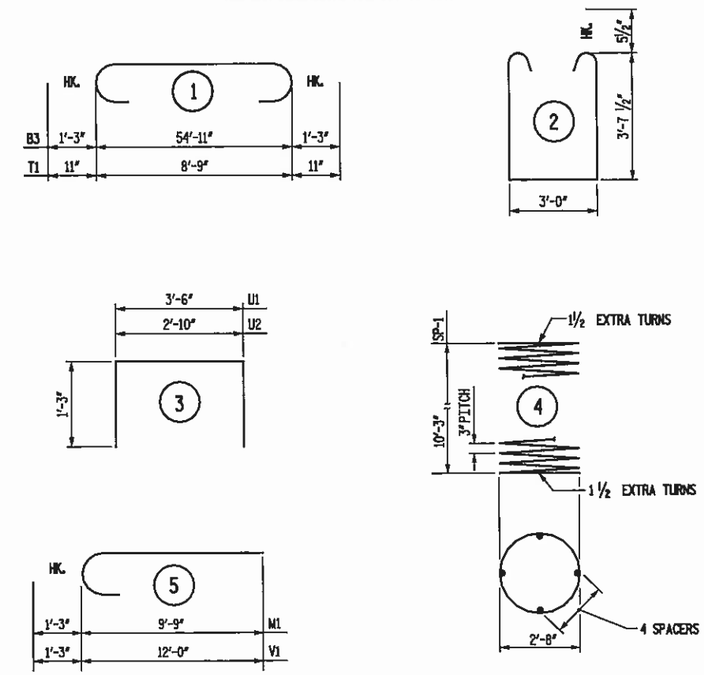

BILL OF MATERIAL

BENT #1

BAR	NO.	SIZE	TYPE	LENGTH	WEIGHT
B1	5	10	STR	54'-11"	1182
B2	4	6	STR	54'-11"	330
B3	6	9	1	57'-5"	1171
D1	68	6	STR	1'-6"	153
M1	36	9	5	11'-0"	1346
S1	76	5	2	11'-2"	885
T1	60	6	STR	8'-9"	789
T2	72	8	1	10'-7"	2035
U1	6	4	3	6'-0"	24
U2	8	4	3	5'-4"	29
V1	36	9	5	13'-3"	1622

REINFORCING STEEL TOTAL 9,566 LB

SPIRAL COLUMN REINFORCING STEEL

BAR	NO.	SIZE	TYPE	LENGTH	WEIGHT
SP-1	3	**	4	363'-0"	727

SPIRAL COLUMN REINF. STEEL TOTAL 727 LB

POUR #1 FOOTING	23.8	CY
POUR #2 COLUMN	7.9	CY
POUR #3 CAP	27.4	CY
TOTAL CY	59.1	

** NOTE: THE "SP" SPIRAL REINFORCING STEEL SHALL BE W20 OR D-20 COLD DRAWN WIRE OR #4 PLAIN OR DEFORMED BAR.

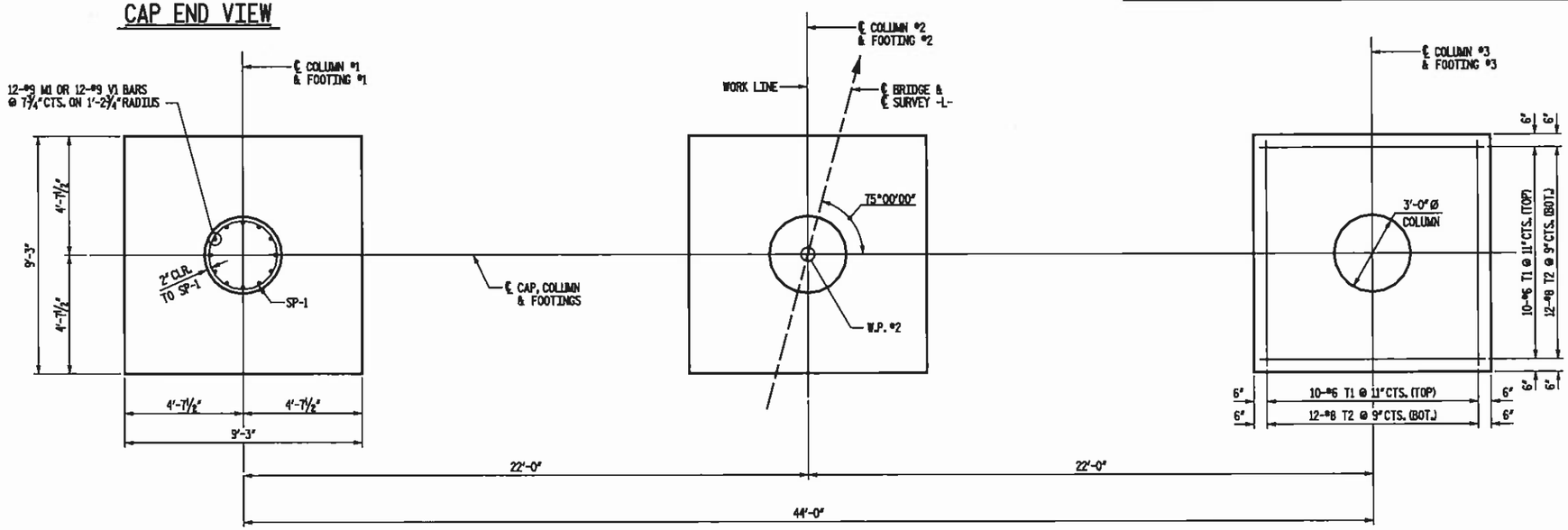

PLAN OF FOOTINGS

DETAILS SHOWN FOR FOOTINGS AND COLUMNS ARE TYPICAL.

NOT TO SCALE

PROJECT NO. 42821
COUNTY: CABARRUS
STATION: 15+97.50
REPLACES BRIDGE NO. 191

STATE OF NORTH CAROLINA
DEPARTMENT OF TRANSPORTATION
RALEIGH

CAST - IN - PLACE
INTERIOR BENT DETAILS

Florence & Hutcheson
CONSULTING ENGINEERS
5121 Kingdom Way, Suite 100 Raleigh, NC 27607
NC License No: F-0258

NORTH CAROLINA PROFESSIONAL SEAL 20532 ENGINEER JAMES E. MONDOLFI
12-7-10

REVISIONS						SHEET NO.
NO.	BY	DATE	NO.	BY	DATE	10
1			3			TOTAL SHEETS
2			4			21

DRAWN BY: B.L. MARIOTTE DATE: DEC 2009
CHECKED BY: J.E. MONDOLFI DATE: DEC 2009

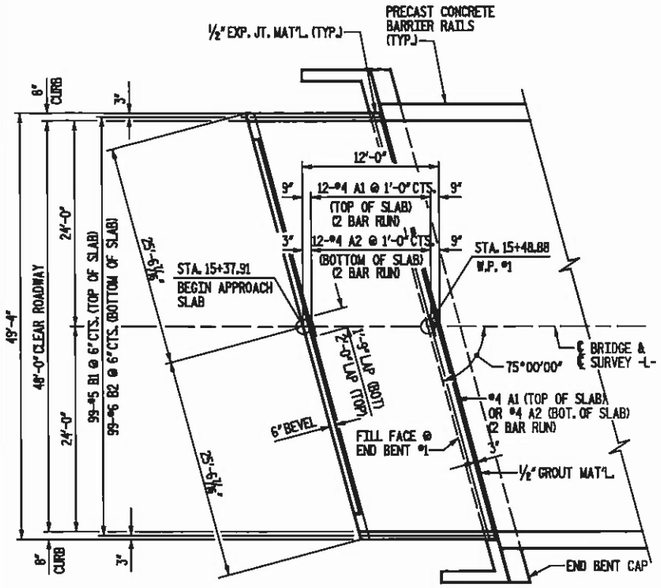

AT END BENT #1

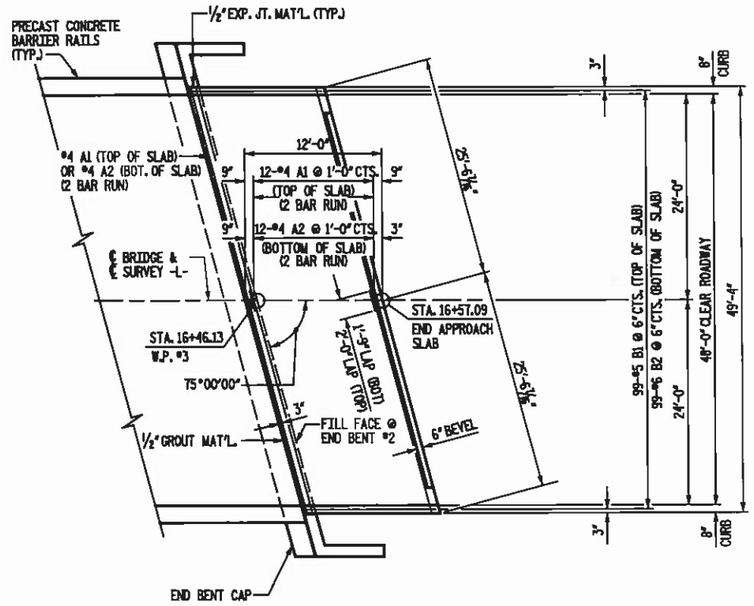

AT END BENT #2

PLAN OF APPROACH SLABS

NOTES

FOR BRIDGE APPROACH FILL INCLUDING FABRIC, 4" Ø DRAINAGE PIPE, AND #78M STONE BACKFILL, SEE BRIDGE APPROACH FILLS, SHEET 13.

APPROACH SLAB SHALL NOT BE CONSTRUCTED PRIOR TO INSTALLATION OF CORED SLABS.

FABRIC SHALL BE TYPE I ENGINEERING FABRIC IN ACCORDANCE WITH THE STANDARD SPECIFICATIONS SECTION 1056.

#78M STONE BACKFILL (CLASS V SELECT MATERIAL) SHALL BE IN ACCORDANCE WITH STANDARD SPECIFICATIONS SECTION 1016.

#78M STONE BACKFILL IS TO BE CONTINUOUS ALONG FILL FACE OF END BENT CAP FROM OUTSIDE EDGE TO OUTSIDE EDGE OF APPROACH SLAB.

FOR THE 4" Ø DRAINAGE PIPE OUTLET(S), SEE BRIDGE APPROACH FILLS, SHEET 13.

AREA BETWEEN THE WINGWALL AND APPROACH SLAB SHALL BE GRADED TO DRAIN THE WATER AWAY FROM THE FILL FACE OF THE BRIDGE AND SHALL BE PAVED.

THE 6" COMP. A.B.C. SHALL BE FLUSH WITH THE ROADWAY END OF THE APPROACH SLAB AND SHALL BE FLUSH WITH EACH EDGE OF THE APPROACH SLAB.

THE CONTRACTOR MAY USE 4" TYPE B-25.0B ASPHALT CONCRETE BASE COURSE IN LIEU OF 6" COMP. A.B.C. IF THIS OPTION IS USED, THE BASE COURSE SHALL BE FLUSH WITH THE ROADWAY END OF THE APPROACH SLAB, AND THE WIDTH SHALL BE THE SAME AS THAT OF THE APPROACH SLAB.

THE CONTRACTOR MAY USE 5" CLASS "A" CONCRETE BASE IN LIEU OF 6" COMP. A.B.C. IF THIS OPTION IS USED, THE CONCRETE BASE SHALL BE FLUSH WITH THE ROADWAY END OF THE APPROACH SLAB, AND THE WIDTH SHALL BE THE SAME AS THAT OF THE APPROACH SLAB. THE CONCRETE SHALL BE FINISHED TO A SMOOTH SURFACE AND A LAYER OF 30 LB ROOFING FELT SHALL BE PLACED BETWEEN THE CONCRETE BASE AND THE APPROACH SLAB TO PREVENT BOND. THE APPROACH SLAB SHALL NOT BE CAST UNTIL THE CONCRETE BASE HAS REACHED AN AGE OF THREE CURING DAYS.

THE JOINT AT THE END BENT SHALL BE GROUTED AS SOON AS PRACTICAL AFTER THE CONSTRUCTION OF THE APPROACH SLABS.

APPROACH SLAB GROOVING IS NOT REQUIRED.

#78 STONE BACKFILL, 4" Ø DRAINAGE PIPE AND FABRIC SHALL BE INCLUDED IN THE LUMP SUM PRICE BID FOR APPROACH SLABS.

BILL OF MATERIAL

FOR ONE APPROACH SLAB (2 REQUIRED)

BAR	NO.	SIZE	TYPE	LENGTH	WEIGHT
* A1	26	#4	STR	26'-5"	459
A2	26	#4	STR	26'-3"	456
* B1	99	#5	STR	11'-1"	1144
B2	99	#6	STR	11'-7"	1722
REINFORCING STEEL				LBS.	2178
* EPOXY COATED REINFORCING STEEL				LBS.	1603
CLASS AA CONCRETE				C. Y.	24.6

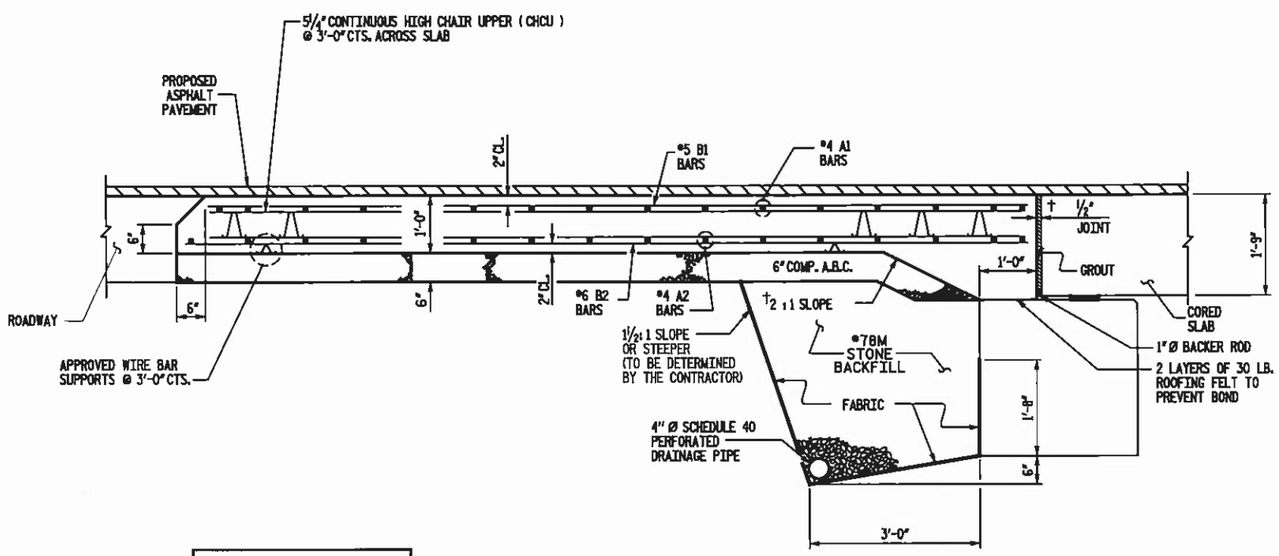

† NORMAL TO END BENT

SECTION THRU SLAB

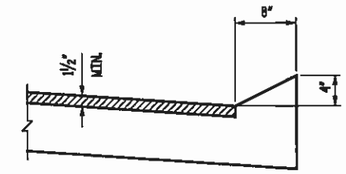

SECTION N-N

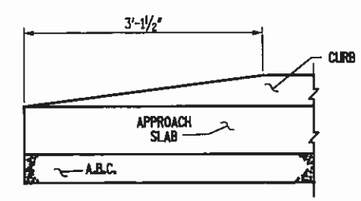

END OF CURB WITHOUT SHOULDER BERM GUTTER

CURB DETAILS

NOT TO SCALE

DRAWN BY: B.L. MARIOTTE DATE: DEC 2009
CHECKED BY: J.E. MONDOLFI DATE: DEC 2009

Florence & Hutcheson
CONSULTING ENGINEERS
5131 Kingdom Way, Suite 100 Raleigh, NC 27607
NC License No. F-0258

NORTH CAROLINA PROFESSIONAL SEAL 20532 ENGINEER JAMES E. MONDOLFI
12-7-10

PROJECT NO. 42821
COUNTY: CABARRUS
STATION: 15+97.50
REPLACES BRIDGE NO. 191

STATE OF NORTH CAROLINA
DEPARTMENT OF TRANSPORTATION
RALEIGH

APPROACH SLAB
48' CLEAR ROADWAY
75° SKEW

REVISIONS						
NO.	BY	DATE	NO.	BY	DATE	
1			3			
2			4			

SHEET NO. 11
TOTAL SHEETS 21

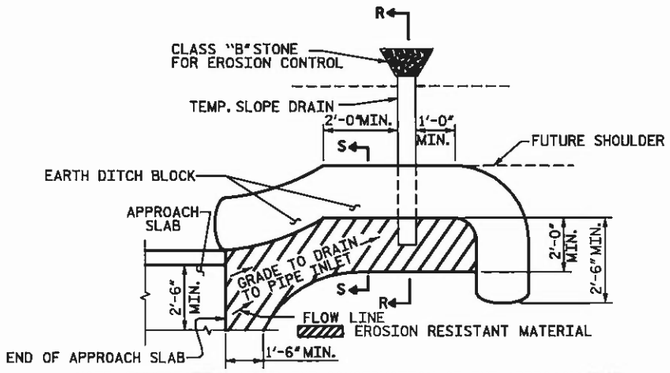

NOTE: IMMEDIATELY AFTER THE CONSTRUCTION OF THE APPROACH SLAB, THE CONTRACTOR SHALL PROVIDE TEMPORARY BERM AND SLOPE DRAIN. CONTRACTOR SHALL GRADE TO PIPE INLET AND PROVIDE EROSION RESISTANT MATERIAL AS SHOWN. THE EROSION RESISTANT MATERIAL SHALL BE EITHER 1) ASPHALT PLANT MIX, TYPE 1 OR TYPE 2, MIN. 2" DEPTH, 2) EROSION CONTROL MAT, OR 3) CONCRETE, AS DIRECTED BY THE ENGINEER. THE SLOPE DRAIN SHALL CONSIST OF A NON-PERFORATED TEMPORARY DRAINAGE PIPE, 12 INCHES IN DIAMETER.

PLAN VIEW

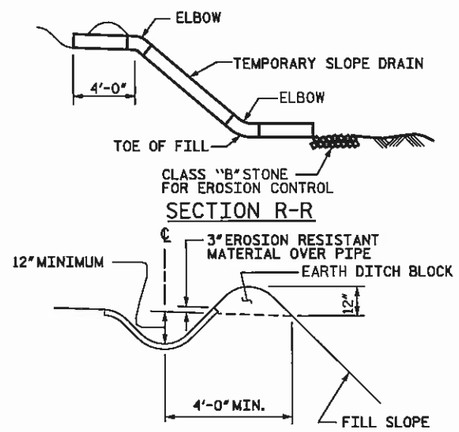

SECTION S-S

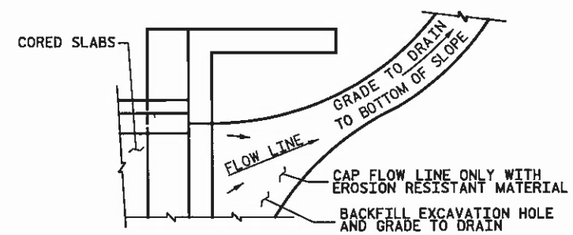

NOTE: IF THE APPROACH SLAB IS NOT CONSTRUCTED IMMEDIATELY AFTER THE BACKFILLING OF THE END BENT EXCAVATION, GRADE TO DRAIN TO THE BOTTOM OF THE SLOPE AND PROVIDE EROSION RESISTANT MATERIAL, SUCH AS FIBERGLASS ROVING OR AS DIRECTED BY THE ENGINEER TO PREVENT SOIL EROSION AND TO PROTECT THE AREA ADJACENT TO THE STRUCTURE. THE CONTRACTOR WILL BE REQUIRED TO REMOVE THESE MATERIALS PRIOR TO CONSTRUCTION OF THE APPROACH SLAB.

TEMPORARY DRAINAGE DETAIL

TEMPORARY BERM AND SLOPE DRAIN DETAILS

(TO BE USED WHEN SHOULDER BERM GUTTER IS REQUIRED)

PROJECT NO. 42821
COUNTY: CABARRUS
STATION: 15+97.50
REPLACES BRIDGE NO. 191

STATE OF NORTH CAROLINA
DEPARTMENT OF TRANSPORTATION
RALEIGH

STANDARD

BRIDGE APPROACH SLAB DETAILS

REVISIONS						SHEET NO.
NO.	BY	DATE	NO.	BY	DATE	12
1			3			TOTAL SHEETS
2			4			21

Florence & Hutcheson
CONSULTING ENGINEERS
5121 Kingdom Way, Suite 100 Raleigh, NC 27607
NC License No: F-0258

NORTH CAROLINA PROFESSIONAL SEAL 20537 ENGINEER JAMES E. MONDOLFI
12-7-10

NOT TO SCALE

DRAWN BY: B.L. MARIOTTE DATE: DEC 2009
CHECKED BY: J.E. MONDOLFI DATE: DEC 2009

PLOT: 12/7/2010 SCALE: 1:1 Florence & Hutcheson, Inc.
FILE NAME: p:\roadway\standards\bridge\approach slab details.dgn

PROJECT REFERENCE NO.	SHEET NO.
B-5223	13

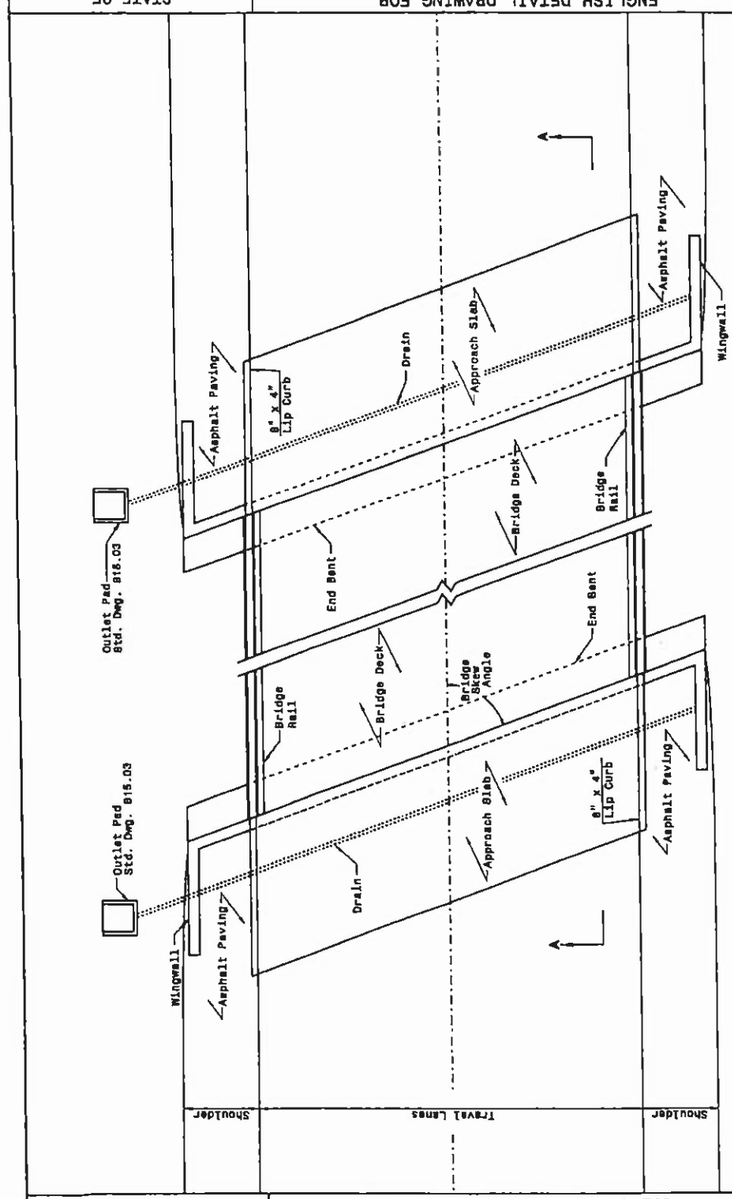

PLAN VIEW
12' APPROACH SLAB

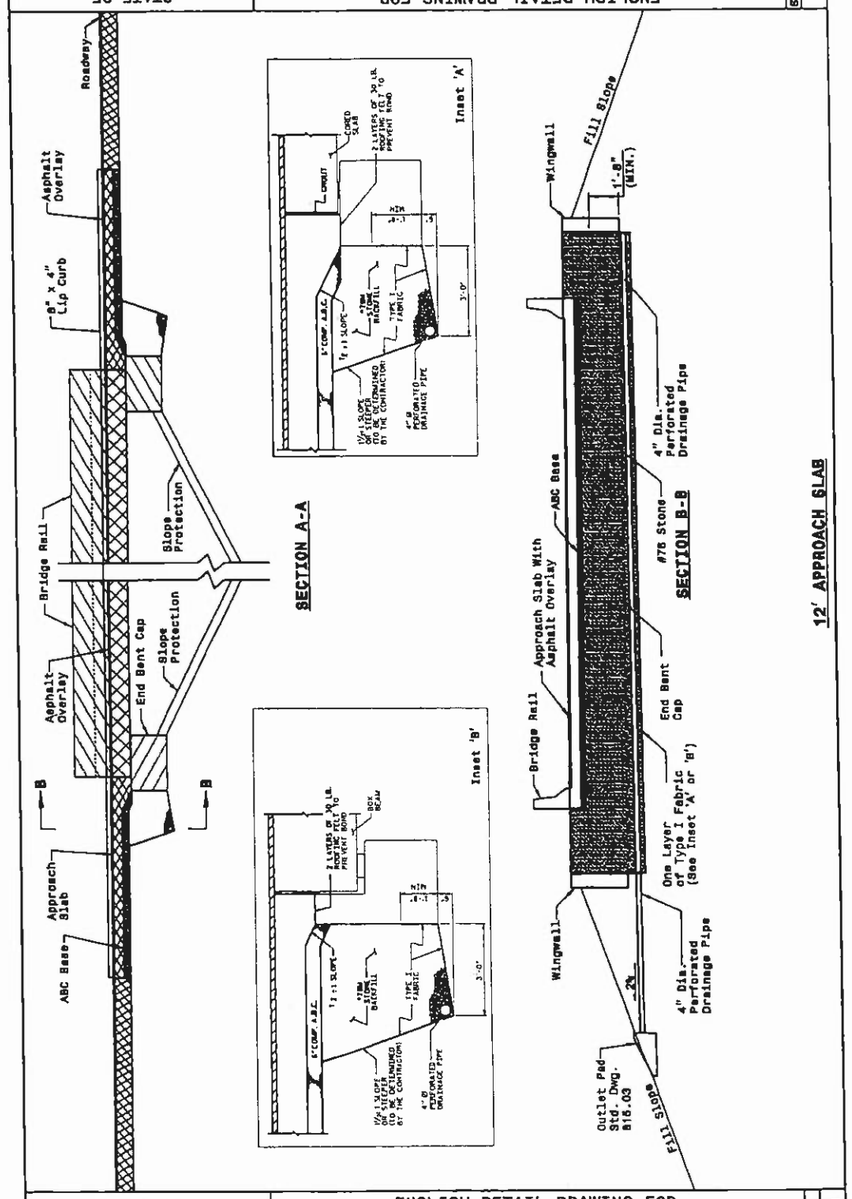

SECTION A-A

SECTION B-B

12' APPROACH SLAB

STATE OF NORTH CAROLINA DEPT. OF TRANSPORTATION DIVISION OF HIGHWAYS RALEIGH, N.C.

ENGLISH DETAIL DRAWING FOR
BRIDGE APPROACH FILLS
CORED SLAB & BOX BEAM BRIDGES
SUB REGIONAL TIER

SHEET 1 OF 2 — 422D11

STATE OF NORTH CAROLINA DEPT. OF TRANSPORTATION DIVISION OF HIGHWAYS RALEIGH, N.C.

ENGLISH DETAIL DRAWING FOR
BRIDGE APPROACH FILLS
CORED SLAB & BOX BEAM BRIDGES
SUB REGIONAL TIER

SHEET 2 OF 2 — 422D11

STATE OF NORTH CAROLINA DEPT. OF TRANSPORTATION DIVISION OF HIGHWAYS RALEIGH, N.C.

ENGLISH DETAIL DRAWING FOR
BRIDGE APPROACH FILLS
CORED SLAB & BOX BEAM BRIDGES
SUB REGIONAL TIER

SHEET 1 OF 2 — 422D11

STATE OF NORTH CAROLINA DEPT. OF TRANSPORTATION DIVISION OF HIGHWAYS RALEIGH, N.C.

ENGLISH DETAIL DRAWING FOR
BRIDGE APPROACH FILLS
CORED SLAB & BOX BEAM BRIDGES
SUB REGIONAL TIER

SHEET 2 OF 2 — 422D11

NORTH CAROLINA PROFESSIONAL SEAL 032886 ENGINEER

11/6/08

PROJECT SERVICES UNIT
STANDARDS AND SPECIAL DESIGN
Office 919-250-4128 FAX 919-250-4119

BRIDGE APPROACH FILLS
CORED SLAB & BOX BEAM BRIDGES
SUB REGIONAL TIER

ORIGINAL BY: K. A. Kempf DATE: 6-10-08
MODIFIED BY: DATE:
CHECKED BY: DATE: 4/7/09
FILE SPEC.: kkempf\english\bridge approach fills.dgn

25-JUN-2008 15:32
kkempf\english\bridge approach fills.dgn
kkempf\english\special details\kkempf\english\bridge approach fills.dgn

DATUM DESCRIPTION

THE LOCALIZED COORDINATE SYSTEM DEVELOPED FOR THIS PROJECT IS BASED ON THE STATE PLANE COORDINATES ESTABLISHED BY ESP FOR MONUMENT "BL-1"
WITH NAD 83 STATE PLANE GRID COORDINATES OF NORTHING: 593968.3400(ft) EASTING: 1515918.4380(ft)
THE AVERAGE COMBINED GRID FACTOR USED ON THIS PROJECT (GROUND TO GRID) IS: .999845965
THE N.C. LAMBERT GRID BEARING AND LOCALIZED HORIZONTAL GROUND DISTANCE FROM "BL-1" TO -L- STATION 13+50.00 IS N 76° 04' 50.2" E , 170.94'
ALL LINEAR DIMENSIONS ARE LOCALIZED HORIZONTAL DISTANCES
VERTICAL DATUM USED IS NAVD 88

RIGHT OF WAY AREA DATA

PARCEL NO	PROPERTY OWNERS NAME	TOTAL ACREAGE	AREA TAKEN	AREA REMAINING RIGHT	AREA REMAINING LEFT	CONSTR. EASEMENT	PERMANENT DRAINAGE EASEMENT	TEMPORARY DRAINAGE EASEMENT
1	BROADUS L CRISCO		0.13 ac					
2	G.E. BLACKWELDER ESTATE		0.14 ac		POSSIBLE OVERLAP IN PROPERTY LINES (.17 ac)			
3	UNKNOWN		438 sf					
4	CARL DEXTER BLACKWELDER, JR.		0.14 ac		POSSIBLE OVERLAP IN PROPERTY LINES (.17 ac)			
5	ALLAN MILES COMPANIES INC		0.13 ac					
6	STEVEN BLACKWELDER		193 sf					

PI Sta 12+49.58
Δ = 17° 15' 48.8" (RT)
D = 4° 56' 21.4"
L = 349.51'
T = 176.09'
R = 1160.00'

PI Sta 19+50.83
Δ = 8° 06' 01.8" (RT)
D = 1° 45' 00.0"
L = 462.89'
T = 231.83'
R = 3,274.04'

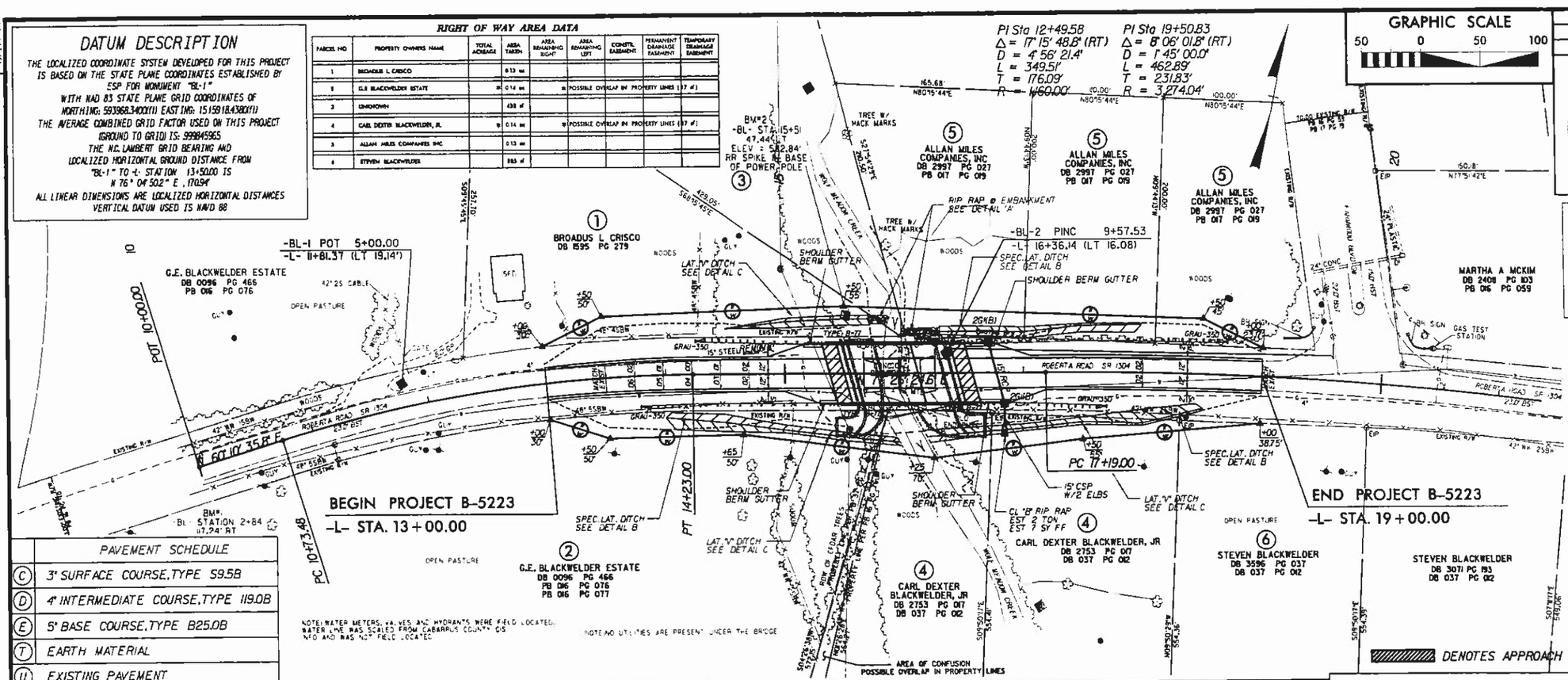

	PAVEMENT SCHEDULE
C	3" SURFACE COURSE, TYPE S9.5B
D	4" INTERMEDIATE COURSE, TYPE I19.0B
E	5" BASE COURSE, TYPE B25.0B
T	EARTH MATERIAL
U	EXISTING PAVEMENT

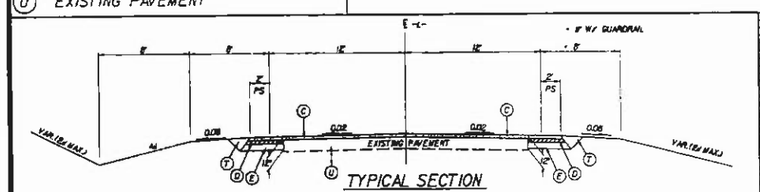

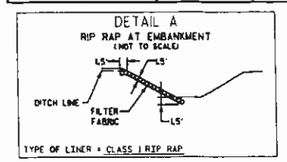

STATION - STATION	SIDE
15+98 - 16+30	LT
15+72 - 15+87	LT

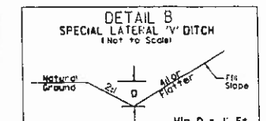

STATION - STATION	SIDE
14+00 - 14+50	RT
16+30 - 18+00	LT
18+00 - 18+50	RT

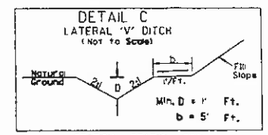

STATION - STATION	SIDE
15+00 - 15+72	LT
14+50 - 16+05	RT
16+17 - 17+50	RT

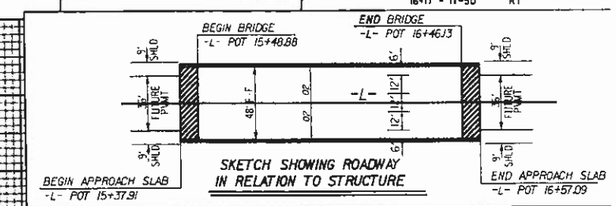

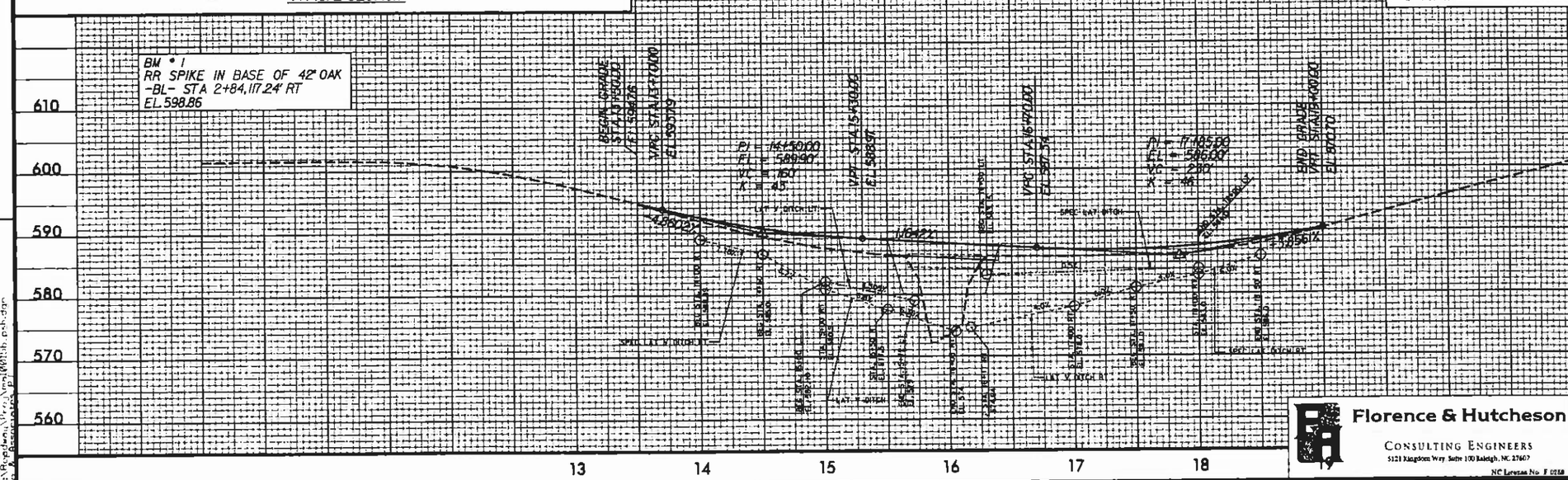

PROJECT NO. 42821
COUNTY: CABARRUS
STATION: 15 + 97.50
REPLACES BRIDGE NO. 191

STATE OF NORTH CAROLINA
DEPARTMENT OF TRANSPORTATION
RALEIGH

BRIDGE NO. 191 ON SR 1304
OVER WOLF MEADOW CREEK

Florence & Hutcheson
CONSULTING ENGINEERS
5121 Kingdom Way, Suite 100 Raleigh, NC 27607
NC License No. F-0258

REVISIONS						
NO.	BY	DATE	NO.	BY	DATE	
1			3			
2			4			

SHEET NO. 14
TOTAL SHEETS 21

PROJECT REFERENCE NO. B-5223
SHEET NO.
R/W SHEET NO.

ROADWAY DESIGN ENGINEER
NORTH CAROLINA PROFESSIONAL SEAL 22606 ENGINEER DAVID C. WALLER
2-9-10

HYDRAULICS ENGINEER
NORTH CAROLINA PROFESSIONAL SEAL 20253 ENGINEER KEVIN WILLIAMS
2/9/10

REVISIONS

8/17/94

2/18/2010
R:\Structures\Williams_Kevin\B0191b_psh.dgn

NOTE: ANY DEVIATION FROM OPTIONS GIVEN WILL REQUIRE PRIOR APPROVAL BY ENGINEER.

ROADSIDE ENVIRONMENTAL UNIT
DEPARTMENT OF TRANSPORTATION
DIVISION OF HIGHWAYS
RALEIGH, N.C.

2006 STANDARD SPECIFICATIONS

EROSION CONTROL PLAN

STD. #	
1632.03	Rock Inlet Sediment Trap, Type-C
1605.01	Temporary Silt Fence
1606.01	Special Sediment Control Fence
1633.01	Temporary Rock Silt Check Type-A

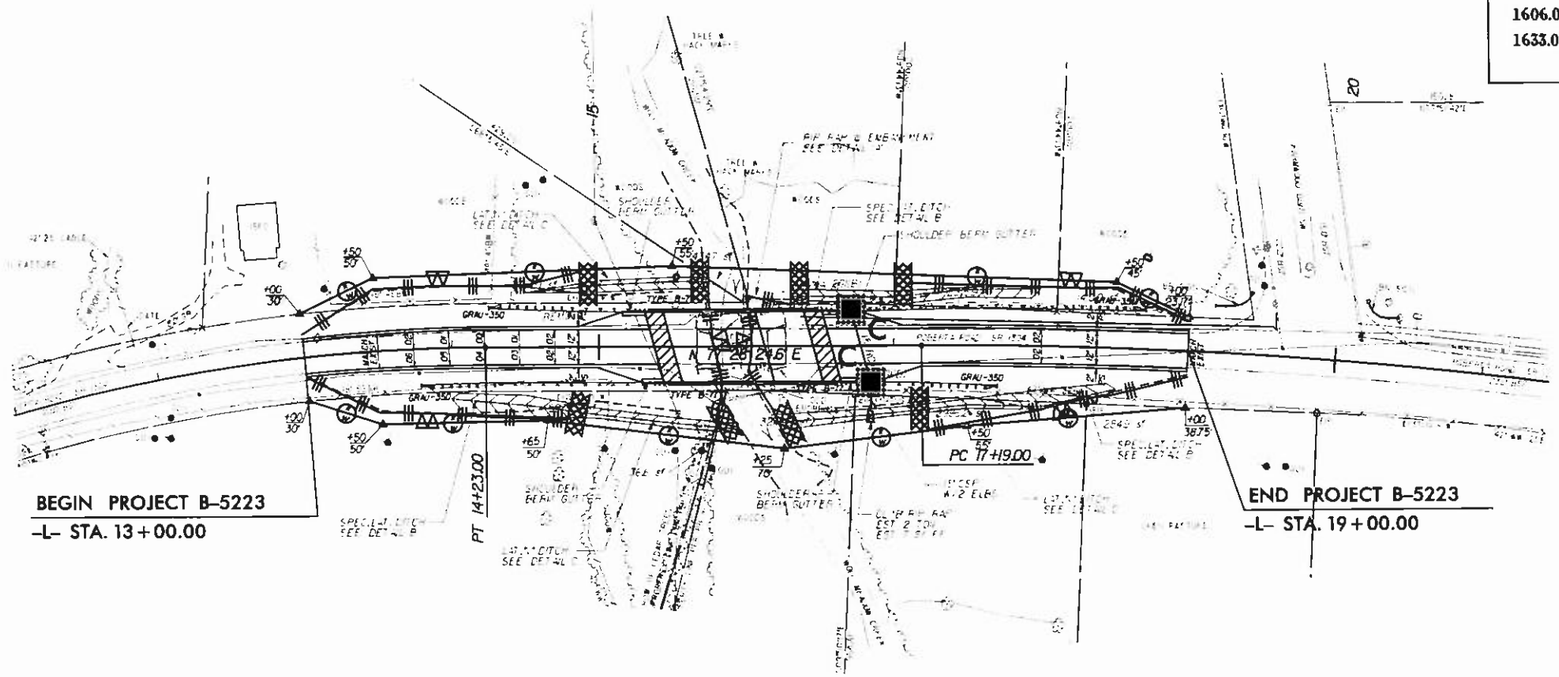

PROJECT NO. 42821
COUNTY: CABARRUS
STATION: 15+97.50
REPLACES BRIDGE NO. 191

STATE OF NORTH CAROLINA
DEPARTMENT OF TRANSPORTATION
RALEIGH

BRIDGE NO. 191 ON SR 1304
OVER WOLF MEADOW CREEK

REVISIONS						SHEET NO.
NO.	BY	DATE	NO.	BY	DATE	15
1			3			TOTAL SHEETS
2			4			21

MATTING INSTALLATION DETAIL

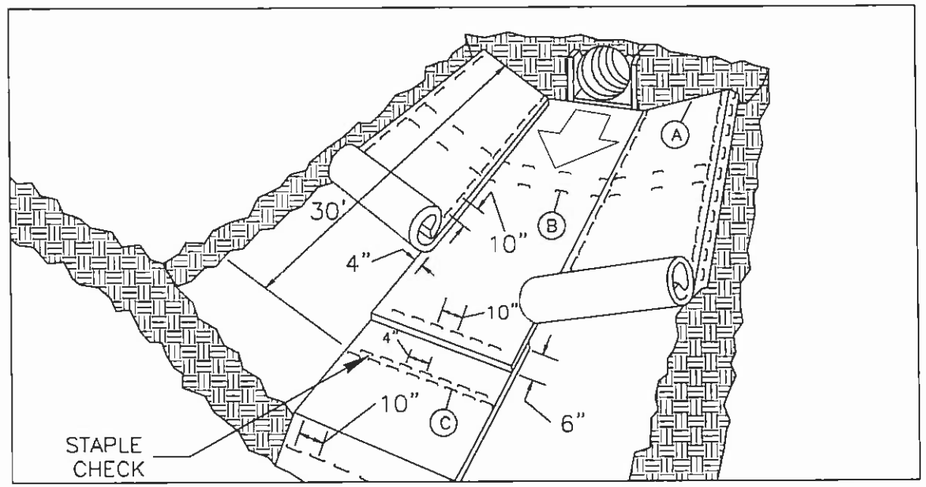

MATTING IN DITCHES

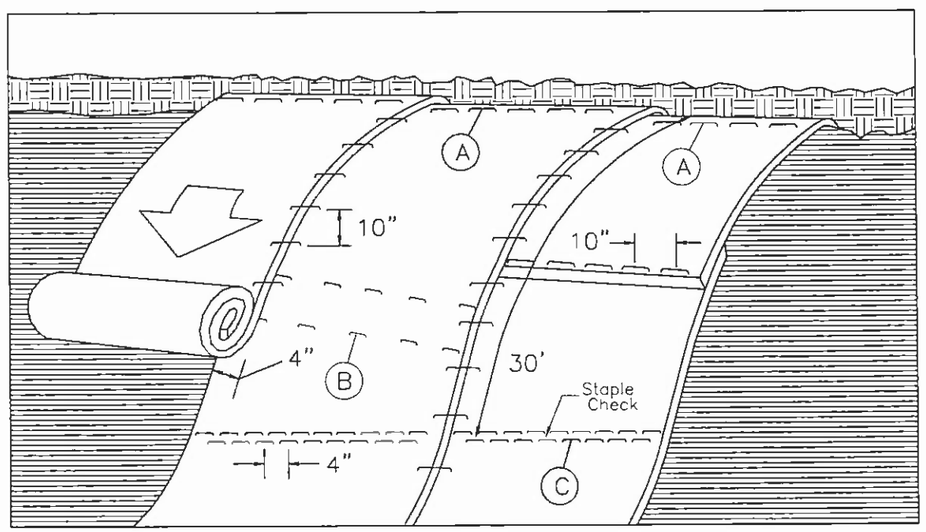

MATTING ON SLOPES

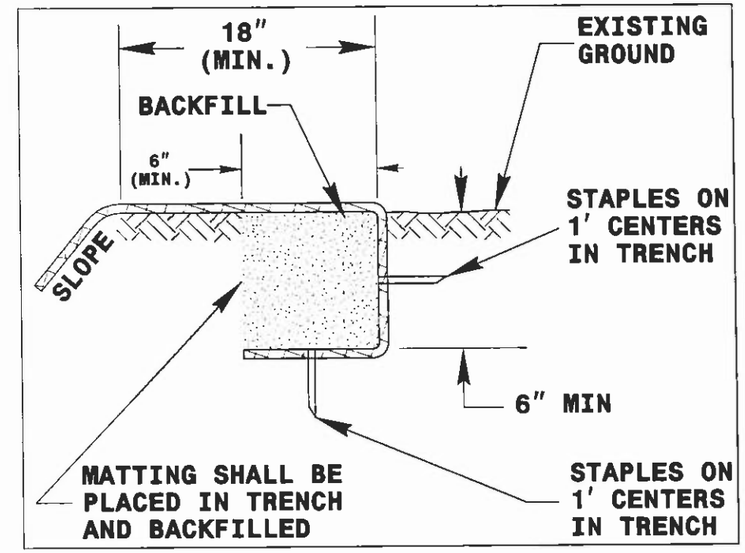

DIAGRAM (A)

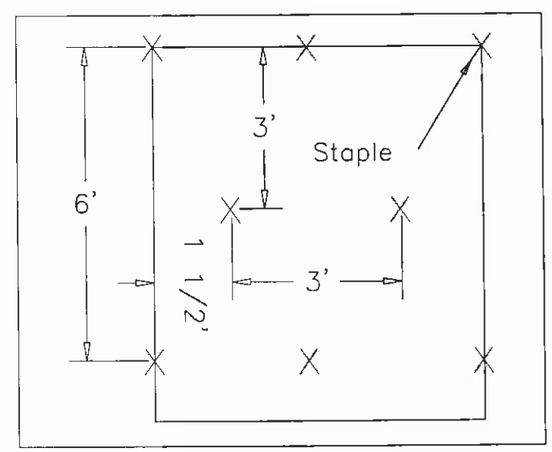

DIAGRAM (B)

Staple Check Pattern

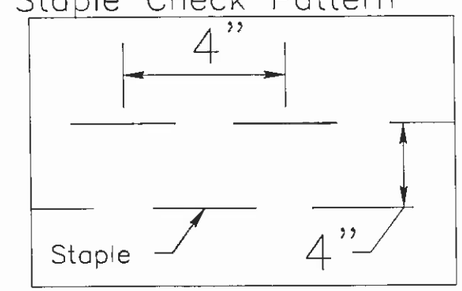

DIAGRAM (C)

PROJECT NO. 42821
COUNTY: CABARRUS
STATION: 15+97.50
REPLACES BRIDGE NO. 191

STATE OF NORTH CAROLINA
DEPARTMENT OF TRANSPORTATION
RALEIGH

BRIDGE NO. 191 ON SR 1304
OVER WOLF MEADOW CREEK

NOTES:

THIS DETAIL APPLIES TO STRAW, EXCELSIOR, AND PERMANENT SOIL REINFORCEMENT MAT (PSRM) INSTALLATION.

STAPLES SHALL BE NO. 11 GAUGE STEEL WIRE FORMED INTO A "U" SHAPE WITH A MINIMUM THROAT WIDTH OF 1 INCH AND NOT LESS THAN 6 INCHES IN LENGTH.

NOT TO SCALE

REVISIONS						SHEET NO.
NO.	BY	DATE	NO.	BY	DATE	16
1			3			TOTAL SHEETS
2			4			21

PROJECT REFERENCE NO.	SHEET NO.
B-5223	
R/W SHEET NO.	

NORTH CAROLINA PROFESSIONAL SEAL 037879 ENGINEER MICHAEL T. KEZERIAN
2-9-10

ROADWAY STANDARD DRAWINGS

THE FOLLOWING ROADWAY STANDARDS AS APPEAR IN "ROADWAY STANDARD DRAWINGS"-ROADWAY DESIGN UNIT-N.C. DEPARTMENT OF TRANSPORTATION-RALEIGH, N.C., DATED JULY 2006 ARE APPLICABLE TO THIS PROJECT AND BY REFERENCE HEREBY ARE CONSIDERED A PART OF THESE PLANS:

STD. NO.	TITLE
1101.03	TEMPORARY ROAD CLOSURES
1101.04	TEMPORARY SHOULDER CLOSURES
1110.01	STATIONARY WORK ZONE SIGNS
1145.01	BARRICADES
1205.01	PAVEMENT MARKINGS - LINE TYPES & OFFSETS
1205.02	PAVEMENT MARKINGS - 2 LANE & MULTILANE ROADWAYS
1205.12	PAVEMENT MARKINGS - BRIDGES
1261.01	GUARDRAIL & BARRIER DELINEATOR SPACING
1261.02	GUARDRAIL & BARRIER DELINEATOR TYPES
1262.01	GUARDRAIL END DELINEATION

GENERAL NOTES

CHANGES MAY BE REQUIRED WHEN PHYSICAL DIMENSIONS IN THE DETAIL DRAWINGS, STANDARD DETAILS, AND ROADWAY DETAILS ARE NOT ATTAINABLE TO MEET FIELD CONDITIONS OR RESULT IN DUPLICATE OR UNDESIRED OVERLAPPING OF DEVICES. MODIFICATION MAY INCLUDE: MOVING, SUPPLEMENTING, COVERING, OR REMOVAL OF DEVICES AS DIRECTED BY THE ENGINEER.

THE FOLLOWING GENERAL NOTES APPLY AT ALL TIMES FOR THE DURATION OF THE CONSTRUCTION PROJECT EXCEPT WHEN OTHERWISE NOTED IN THE PLAN OR DIRECTED BY THE ENGINEER.

TRAFFIC PATTERN ALTERATIONS

A) NOTIFY THE ENGINEER TWENTY ONE (21) CALENDAR DAYS PRIOR TO ANY TRAFFIC PATTERN ALTERATION.

SIGNING

B) PROVIDE PERMANENT SIGNING.

C) PROVIDE SIGNING AND DEVICES REQUIRED TO CLOSE THE ROAD ACCORDING TO THE ROADWAY STANDARD DRAWINGS AND TRAFFIC CONTROL PLANS.

PROVIDE SIGNING REQUIRED FOR THE OFF-SITE DETOUR ROUTE AS SHOWN IN THE TRAFFIC CONTROL PLANS, UNLESS OTHERWISE NOTED.

D) COVER OR REMOVE ALL SIGNS AND DEVICES REQUIRED TO CLOSE THE ROAD WHEN ROAD CLOSURE IS NOT IN OPERATION.

COVER OR REMOVE ALL SIGNS REQUIRED FOR THE OFF-SITE DETOUR WHEN THE DETOUR IS NOT IN OPERATION.

E) ENSURE ALL NECESSARY SIGNING IS IN PLACE PRIOR TO ALTERING ANY TRAFFIC PATTERN.

TRAFFIC CONTROL DEVICES

F) PLACE TYPE III BARRICADES, WITH "ROAD CLOSED" SIGN R11-2 ATTACHED, OF SUFFICIENT LENGTH TO CLOSE ENTIRE ROADWAY.

G) INSTALL PAVEMENT MARKINGS ON FINAL SURFACE AS FOLLOWS:

ROAD NAME	MARKING
1. SR 1304 (ROBERTA RD.)	PAINT

H) PLACE AT LEAST TWO APPLICATIONS OF PAINT PAVEMENT MARKINGS ON THE FINAL WEARING SURFACE ON NEW ASPHALT PAVEMENT. PLACE ADDITIONAL APPLICATIONS OF PAINT UPON SUFFICIENT DRYING TIME, AS DETERMINED BY THE ENGINEER.

I) TIE PROPOSED PAVEMENT MARKING LINES TO EXISTING PAVEMENT MARKING LINES.

PHASE I

STEP 1: - USING ROADWAY STANDARD DRAWING NUMBER 1101.04, SHEET 1 OF 1, INSTALL ALL TEMPORARY ROAD CLOSURE SIGNS KEEPING SIGNS COVERED (SEE ROADWAY STANDARD DRAWING NUMBER 1101.03, SHEET 1 OF 9).

WORKING IN A CONTINUOUS MANNER, COMPLETE THE FOLLOWING WORK IN PHASE I, STEP 2.

STEP 2: - CLOSE SR 1304 (ROBERTA RD.) TO TRAFFIC, UNCOVER ALL TEMPORARY ROAD CLOSURE SIGNS AND SHIFT TRAFFIC TO DETOUR (SEE SHEET 16).

STEP 3: - DISMANTLE AND REMOVE EXISTING BRIDGE NUMBER 191.

STEP 4: - COMPLETE CONSTRUCTION OF PROPOSED STRUCTURE, APPROACH ROADWAY TIE-INS, AND ASSOCIATED ITEMS.

STEP 5: - PLACE FINAL PAVEMENT MARKINGS ON SR 1304 (ROBERTA RD.).

WORKING IN A CONTINUOUS MANNER, COMPLETE THE FOLLOWING WORK IN PHASE I, STEP 6.

STEP 6: - USING ROADWAY STANDARD DRAWING NUMBER 1101.04, SHEET 1 OF 1, REMOVE ALL TEMPORARY ROAD CLOSURE SIGNS, ALL TRAFFIC CONTROL DEVICES AND OPEN SR 1304 (ROBERTA RD.) TO TRAFFIC.

FINAL PAV'T MARKING SCHEDULE

SYMBOL	DESCRIPTION	QUANTITY BREAKDOWN	PAY ITEM	TOTAL QUANTITY
		PAVEMENT MARKING LINES		
			PAINT (4")	
PA	WHITE EDGELINE 2X	2,400 LF		
PI	YELLOW DOUBLE CENTER LINE 2X	2,400 LF		
			TOTAL	4,800 LF

PROJECT NO. 37485
COUNTY: CABARRUS
STATION: 15+97.50
REPLACES BRIDGE NO. 191

STATE OF NORTH CAROLINA
DEPARTMENT OF TRANSPORTATION
RALEIGH

BRIDGE NO. 191 ON SR 1304
OVER WOLF MEADOW CREEK

Florence & Hutcheson
CONSULTING ENGINEERS
5121 Kingdom Way, Suite 100 Raleigh, NC 27607
NC License No. F-0268

REVISIONS							
NO.	BY	DATE	NO.	BY	DATE	SHEET NO. 17
1			3			TOTAL SHEETS 21
2			4			

PROJECT REFERENCE NO.	SHEET NO.
B-5223	
R/W SHEET NO.	

NORTH CAROLINA PROFESSIONAL SEAL ENGINEER MICHAEL T. REEDER 2-9-10

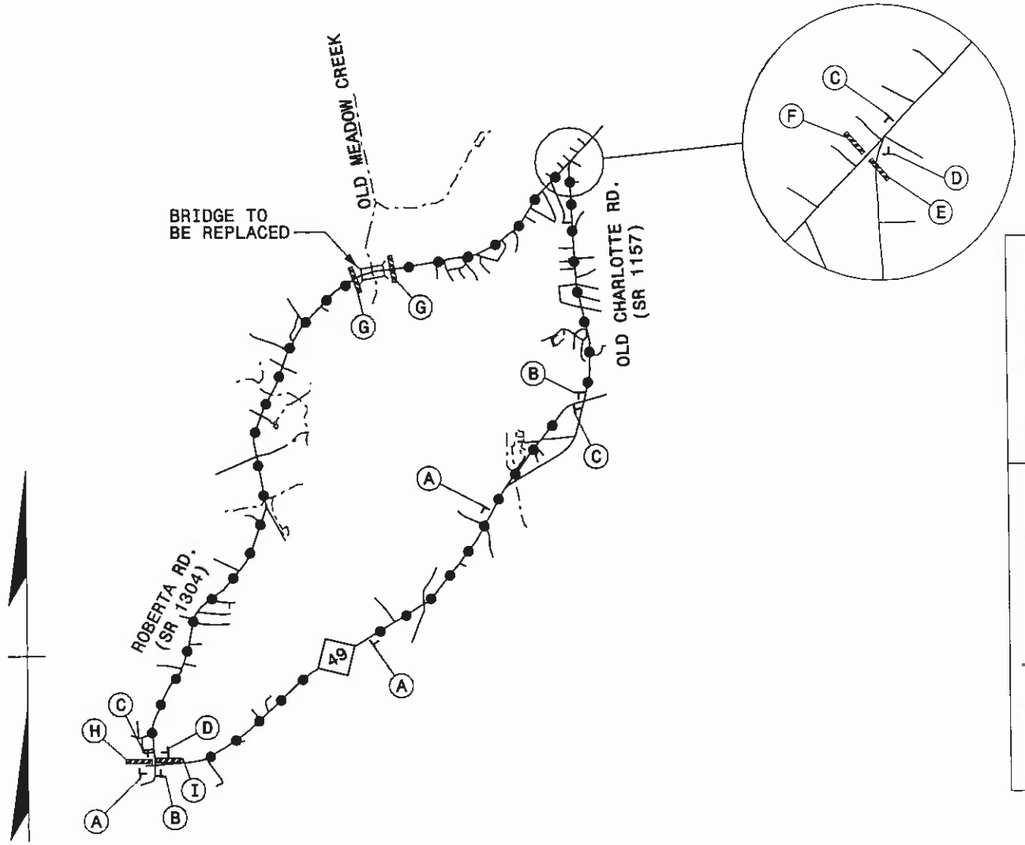

SIGN NUMR:
TYPE: D
QUANTITY:

SIGN WIDTH: 66 INCHES
HEIGHT: 16 INCHES
TOTAL AREA:(S.F.) 7.33

BORDR TYPE: FLUSH
RECESS: 0.00 INCHES
WIDTH: 0.75 INCHES
RADII: 3.00 INCHES

NO. Z BARS: #N/A VNB:
LENGTH: #N/A INCHES

BACKG COLOR: ORANGE
COPY COLOR: BLACK

MAJOR COPY SERIES: D

MAT'L: 0.125 " ALUMINUM

DESIGN BY: GEP
PROJECT ID: MA10015B

CK BY:
DIV: 10

STD #: 196
DATE: ########

USE NOTES: 1,4
1.Legend and border shall be direct applied Type III reflective sheeting.
2.Legend and border shall be direct applied Type I reflective sheeting.
3.Shields shall be Type III reflective sheeting on .032" aluminum and demountable.
4.Background shall be Type III refl. shtg.
5.Background shall be Type I refl. sheeting.
6.Center arrow(s) vertically on sign.

ROBERTA RD

MOUNTED ON 2 U POSTS

VERTICAL SPACING INCHES	(y)
5.00	SPACE
8.00	LINE 1
D	11.0
5.00	SPACE
0.00	
0.00	
0.00	
0.00	
0.00	
0.00	
0.00	
0.00	
0.00	
TOTAL: 18	0.00

SIZE/ SERIES		LT MARGIN																RT MARGIN
								SIGN COPY										
CHAR:	6.00 INCH		R	O	B	E	R	T	A		R	D						
TYPE:	D	7.94	5.16	5.82	5.44	4.78	5.16	4.03	5.02	5.46	5.44	4.03	0.00	0.00	0.00	0.00		
#/LC:	0.00 INCH	[x]	7.94	13.09	18.71	24.15	28.93	34.08	38.12	43.14	48.60	54.03	58.06	0.00	0.00	0.00		
SPCE:	1.00 FACTOR																	
	LINE 1		0.00	0.00	0.00	0.00	0.00	0.00	0.00	0.00	0.00	0.00	0.00	0.00	0.00	0.00	7.94	
			0.00	0.00	0.00	0.00	0.00	0.00	0.00	0.00	0.00	0.00	0.00	0.00	0.00	0.00	0.00	

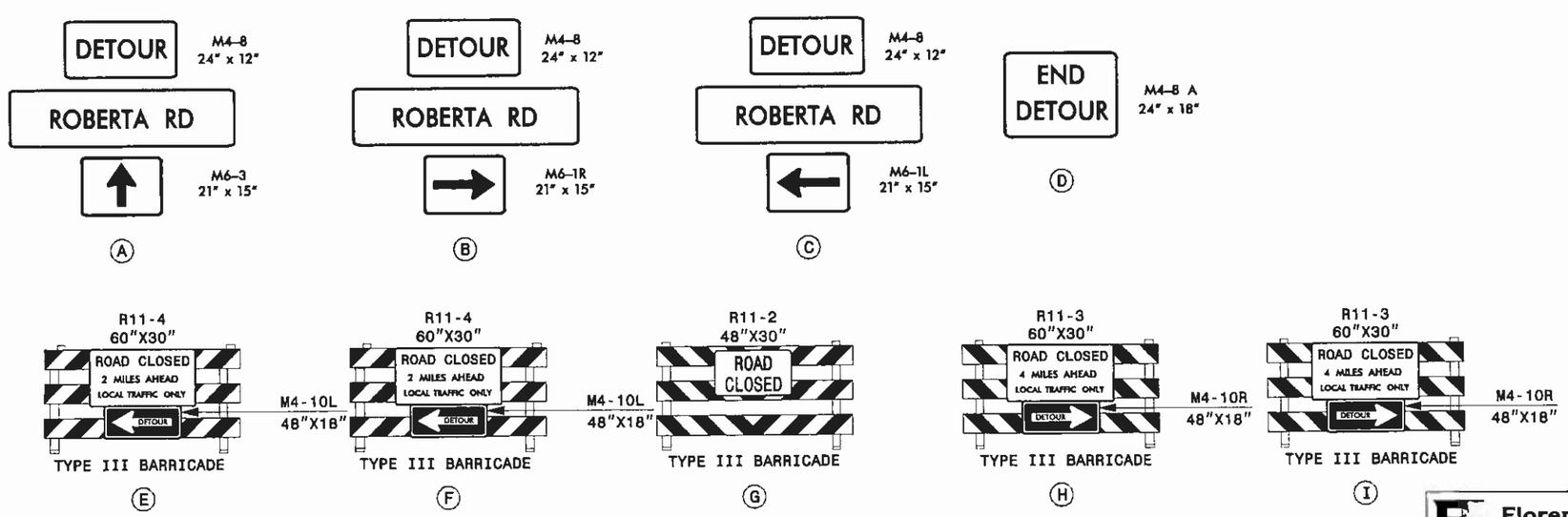

LEGEND

DETOUR ROUTE

PROJECT NO. 37485
COUNTY: CABARRUS
STATION: 15+97.50
REPLACES BRIDGE NO. 191

STATE OF NORTH CAROLINA
DEPARTMENT OF TRANSPORTATION
RALEIGH

BRIDGE NO. 191 ON SR 1304
OVER WOLF MEADOW CREEK

Florence & Hutcheson
CONSULTING ENGINEERS
5121 Kingdom Way, Suite 100 Raleigh, NC 27607
NC License No. F-0268

REVISIONS						SHEET NO.
NO.	BY	DATE	NO.	BY	DATE	18
1			3			TOTAL SHEETS
2			4			21

PROJ. REFERENCE NO.	SHEET NO.
B-5223	19

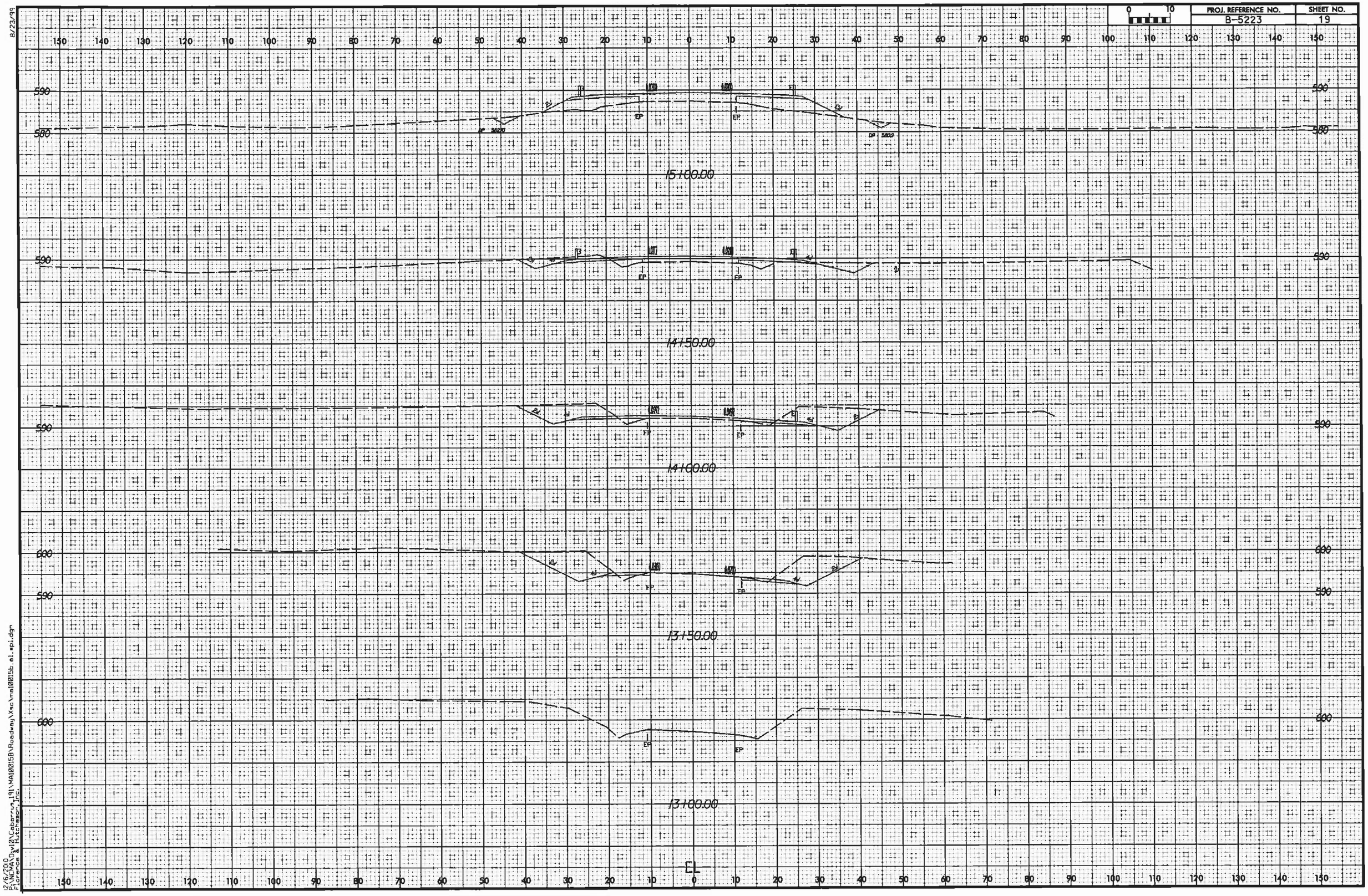

8/23/99

12/6/2010
B:\NCMA\Div12\Cabarrus_191\MA10015B\Roadway\Xsc\ma10015b_el_spl.dgn
Florence & Hutchason, Inc.

PROJ. REFERENCE NO.	SHEET NO.
B-5223	20

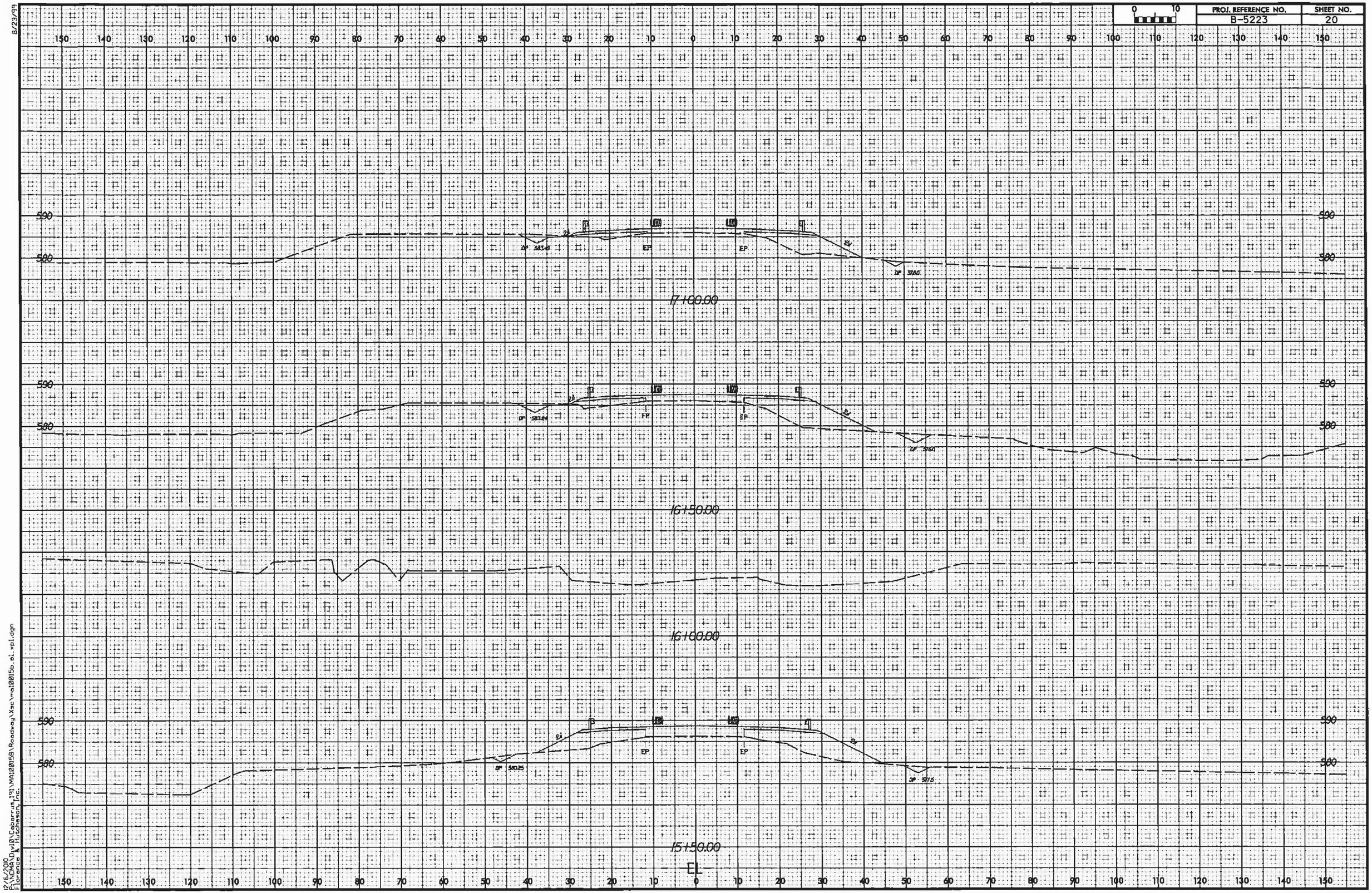

8/23/99

12/6/2010
P:\NCHA\Dyv10\Cabarrus_191\MA120158\Roadway\Xsc\ma10015b_el_xpl.dgn
Florence & Hutchesson, Inc.

PROJ. REFERENCE NO.	SHEET NO.
B-5223	21

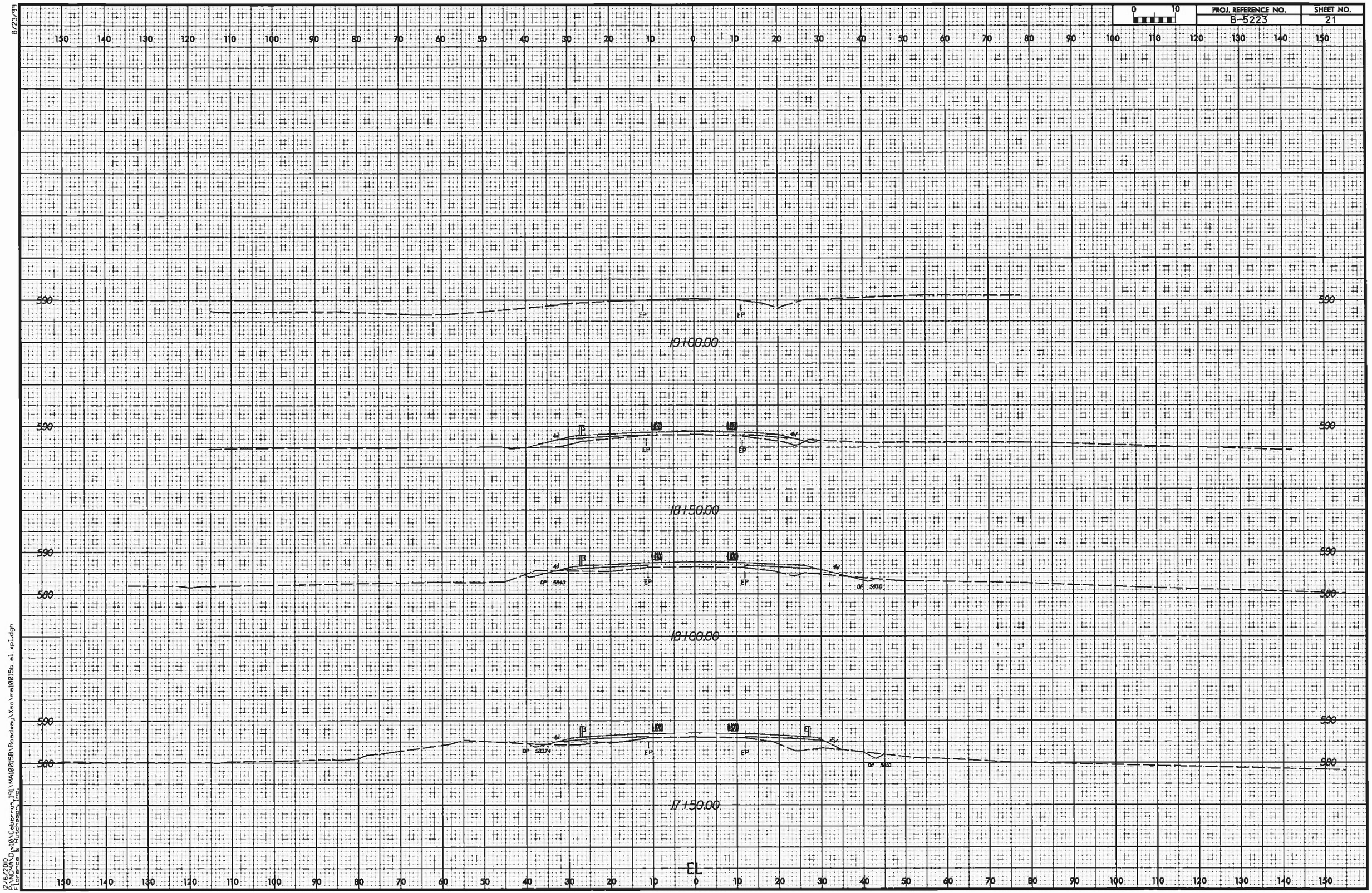

8/23/99

12/6/2010
P:\NCMA\Div10\Cabarrus_191\MA10015B\Roadway\Xsc\ma10015b_el_xpl.dgn
Florance & Hutchason, Inc.