STATE OF NORTH CAROLINA
DEPARTMENT OF TRANSPORTATION

MICHAEL F. EASLEY
GOVERNOR

LYNDO TIPPETT
SECRETARY

December 18, 2006

NC Department of Environment and Natural Resources
Division of Water Quality – Surface Water Protection
Attention: Mr. Paul Rawls, Section Chief
1617 Mail Service Center
Raleigh NC 27699-1617

Subject: **Request for Section 401 Modification** for US 1 Vass Bypass, Moore/Lee County; TIP No. R-0210WM; Federal Aid No. NHS-1 (108); State Project No. 6.569005T; Division 8; Debit $475.00 from WBS 34330.4.3.

Dear Mr. Rawls:

The North Carolina Department of Transportation (NCDOT) was issued a 401 Water Quality Certification (WQC) by the North Carolina Division of Water (NCDWQ) on July 19, 2002 for the US 1 Vass Bypass in Moore/Lee Counties. Since issuance of this 401 WQC, numerous correspondence has been exchanged between the NCDOT and NCDWQ. Notable correspondence includes the Notice of Violation dated May 5, 2003 and an Assessment of Civil Penalties dated February 10, 2005. The purpose of this letter is to request a modification of the 401 WQC per the Settlement Agreement and Withdrawal Petition (SAWP) dated October 15, 2006. There are no changes to jurisdictional impacts as a result of the new design changes. Please find enclosed Attachments A – Summary of Emergency Spill Control Measures and Devices, B – Plan sheets, and C- Storage Volume and Calculations of Storage Volumes.

Items #1 and #2 of the Settlement Agreement and Withdrawal Petition

On November 17, 2006, the NCDOT took action on Item #1 in the SWAP. The NCDOT made its payment of $12,284.28 to the North Carolina Department of Environment and Natural Resources. Additionally, the NCDOT provided a list of items in the spill kit to NCDWQ.

MAILING ADDRESS:
NC DEPARTMENT OF TRANSPORTATION
PROJECT DEVELOPMENT AND ENVIRONMENTAL ANALYSIS
NATURAL ENVIRONMENT UNIT
1598 MAIL SERVICE CENTER
RALEIGH NC 27699-1598

TELEPHONE: 919-715-1334 or 919-715-1335

FAX: 919-715-5501

WEBSITE: WWW.NCDOT.ORG

LOCATION:
PARKER LINCOLN BUILDING
2728 CAPITAL BLVD. SUITE 240
RALEIGH NC 27604

Item #3 of the Settlement Agreement and Withdrawal Petition

In accordance with Item #3 of the SWAP, the NCDOT agrees to install emergency spill control measures and devices that were listed in Attachment A of the SWAP.

Item #4 of the Settlement Agreement and Withdrawal Petition

In accordance with Item #4 of the SWAP, the NCDOT submits this 401 WQC modification request. In Item #4a of the SWAP, the 401 WQC modification request had to include a complete list of station numbers where emergency spill control measures and devices will be constructed. This information is found in Attachment A of this letter. In this attachment, the NCDOT lists all emergency control devices referencing the list from Attachment A of the SWAP with the location of the sheet number and reference identification on the plan sheet plan view. This information complies with Item #4a of the SWAP.

The following summarizes how NCDOT has resolved the direct discharge of stormwater that NCDWQ raised in the settlement:

- At Station No. 29+10 Left (Site AA) and 31+10 Left (Site BB) on Sheet 22 TIP No. R-210 WM, the NCDOT will construct an energy dissipation pad at the pipe outlet which will flow into a grassed swale. Notes have been included on the plan sheet to describe this work. A typical of the swale is included in Attachment B, Sheet 2, of this letter.

- At Station No. 77+20 Right (Site CC) on Sheet 13 of TIP No. R-210WM, the NCDOT will eliminate this direct discharge by constructing a pre-formed scour hole. There is restricted access at this location. This work will be by hand due to the high fill, guardrail and the adjacent wetlands. Notes have been included on the plan sheet to describe this work.

- At Station No. 81+90 Left (Site DD) on Sheet 15 of TIP No. R-210WM, the NCDOT will eliminate this direct discharge adding 20 feet of high density poly ethylene (HDPE) to the existing pipe. This will allow discharge outside the buffer. Notes have been included on the plan sheet to describe this work.

- At Station No. 94+60 Left (Site EE) on Sheet 17 of TIP No. R-210WM, the NCDOT will place additional Class I rip rap at the outlet of the 36-inch RCP to deflect flow away from opposite stream bank. Notes have been included on the plan sheet to describe this work.

In Item #4b of the SWAP, the NCDOT must include in the 401 WQC modification request to-scale drawings and designs of the proposed emergency spill control measures at each location including the storage volumes and calculations of the storage volumes where applicable. Attachment B of this letter includes to-scale drawings and designs of these emergency spill control measures and devices.

In Attachment C of this letter are the storage volumes and calculations of the storage volumes where applicable. This action brings NCDOT into compliance with Item #4 of the SWAP.

Summary

The NCDOT requests the NCDWQ to modify the 401 WQC for the Vass Bypass (TIP No. R-210). The NCDOT submits this 401 modification request to comply with Item #4 of the Settlement Agreement and Withdrawal Petition dated October 15, 2006.

We appreciate your prompt attention to this request. If you have any questions regarding this letter or its appendices, please contact Ms. Deanna Riffey at (919) 715-1409.

Sincerely,

E. L. Lusk

for Gregory J. Thorpe, Ph.D.
Environmental Management Director, PDEA

W/attachments

Ms. Coleen H. Sullins, NCDWQ Deputy Director
Mr. John Hennessy, NCDWQ
Ms. Deborah Barbour, P.E., Director of Preconstruction
Mr. D. R. Henderson, P.E., Hydraulics Unit
Mr. Jay Bennett, P.E., Roadway Design
Mr. Art McMillan, P.E., Highway Design
Mr. Don G. Lee, CPESC, Roadside Environmental Unit
Mr. Tim Johnson, P.E., Division 8
Mr. John R.G. Olinger, P.E., Division 8
Mr. Art C. King, Division 8
File R-0210

Attachment A - Summary of Emergency Spill Control Measures and Devices - Location and Site Identification
TIP No. R-210 WM

R-210 Section	Settlement Sheet No.	Settlement Site No.	Station Number	R-210WM Sheet No.	R-210 WM Id	Emergency Spill Control Measure or Device
A	7	1	23+10-Rt-	5	No id	HSCB - already constructed
	9	3	31+70-Rt-	6	No id	HSCB - already constructed
			33+70-Rt-	6	No id	HSCB - already constructed
	10	3 & 4	34+90-Rt-	7	No id	HSCB - already constructed
			36+00-Rt-	7	No id	HSCB - already constructed
			36+30-Lt-	7	No id	HSCB - already constructed
	14	10	52+60-Lt-	8	A	Sandbag Stockpile
			52+50-Rt-	8	B	Sandbag Stockpile
	16	15	60+50-Lt-	9	1	mHSCB
			61+50-Lt-	9	C	Sandbag Stockpile
	17		61+10-Rt-	9	D	Sandbag Stockpile
		16	63+20-Lt-	10	E	Sandbag Stockpile
			65+20-Lt-	10	F	Sandbag Stockpile
	18	17	67+20-Lt-	11	G	Sandbag Stockpile
			68+10-Lt-	11	I	Sandbag Stockpile
			67+80-Rt-	11	H	Sandbag Stockpile
	20	18 & 20	75+80-Lt-	13	2	mHSCB
			77+00-Lt-	13	3	mHSCB
			77+20-Rt-	13	4	mHSCB
			77+20-Rt-	13	CC	Direct Discharge of stormwater shall be eliminated.
			75+00-Rt-	13	5	mHSCB
	21	21	79+00-Lt-	14	6	mHSCB
			79+50-Lt-	14	J	mHSCB
	22	22	81+80-Rt-	15	7	mHSCB for Lateral ditch
			81+90-Lt-	15	DD	Direct Discharge of stormwater shall be eliminated
	23	22	86+30-Rt-	16	8	mHSCB for Lateral ditch
	24	25	91+50-Lt-	17	K	Sandbag Stockpile
			94+60-Lt-	17	EE	Additional outlet protection shall be provided for stormwater pipe
B	14	9	140+40-Lt-	18	L	Sandbag Stockpile
			140+80-Rt-	18	9	mHSCB for Lateral ditch
	15	9	141+40-Lt-	19	M	Sandbag Stockpile
			141+40-Rt-	19	N	Sandbag Stockpile
	18		153+15-Lt-	20	O	Sandbag Stockpile
C	4	3	20+80-Lt-	21	10	mHSCB
			20+60-Lt-	21	P	Sandbag Stockpile
	7	4 & 5	31+60-Rt-	22	11	mHSCB for Lateral ditch
			29+10-Med-	22	AA	stormwater flow will be directed into constructed grass swale prior to discharge
			30+50-Rt-	22	Q	Sandbag Stockpile
			31+10	22	R	Sandbag Stockpile
			31+10	22	BB	stormwater flow will be directed into constructed grass swale prior to discharge
	8	5	31+80-Lt-	23	12	mHSCB for Lateral ditch
	9	6	38+50-Lt-	24	S	Sandbag Stockpile
			39+20-Lt-	24	T	Sandbag Stockpile
	12	10	48+40-Lt-	25	U	Sandbag Stockpile
			49+00-Rt-	25	V	Sandbag Stockpile

Attachment C - Storage Volume and Calculations of Storage Volumes
TIP No. R-210WM

Project Section	Project Station No.	Volume Required Cubic Yards	Volume Available Cubic Yards
R-210A			
	60+50 Lt	222.8	360
	75+80 Rt	78.7	1095
	77+00 Lt	37.7	39
	77+20 Lt	106.4	150
	75+00 Rt	916	1019
	79+00 Lt	106.4	150
	81+80 Rt	33.3	39
	86+30 Rt	44.4	50
R-210B			
	140+80 Rt	94.5	260
R-210C			
	20+80 Lt	123.4	193
	31+60 Rt	55.4	226
	31+80 Lt	250.9	277

9/09/99

R-0210WM

PROJECT:

See Sheet 1-A For Index of Sheets

STATE OF NORTH CAROLINA
DIVISION OF HIGHWAYS

MOORE & LEE COUNTIES

METRIC

ALL DIMENSIONS IN THESE PLANS ARE IN METERS

STATE	STATE PROJECT REFERENCE NO.	SHEET NO.	TOTAL SHEETS
N.C.	R-0210WM	1	

STATE PROJ. NO.	F.A. PROJ. NO.	DESCRIPTION
34330.43		CONST.

ATTACHMENT B

LOCATION: WETLAND MITIGATION SITES FOR US 1 FROM LAKEVIEW IN MOORE COUNTY TO SANFORD IN LEE COUNTY.

TYPE OF WORK: STORMWATER DEVICES

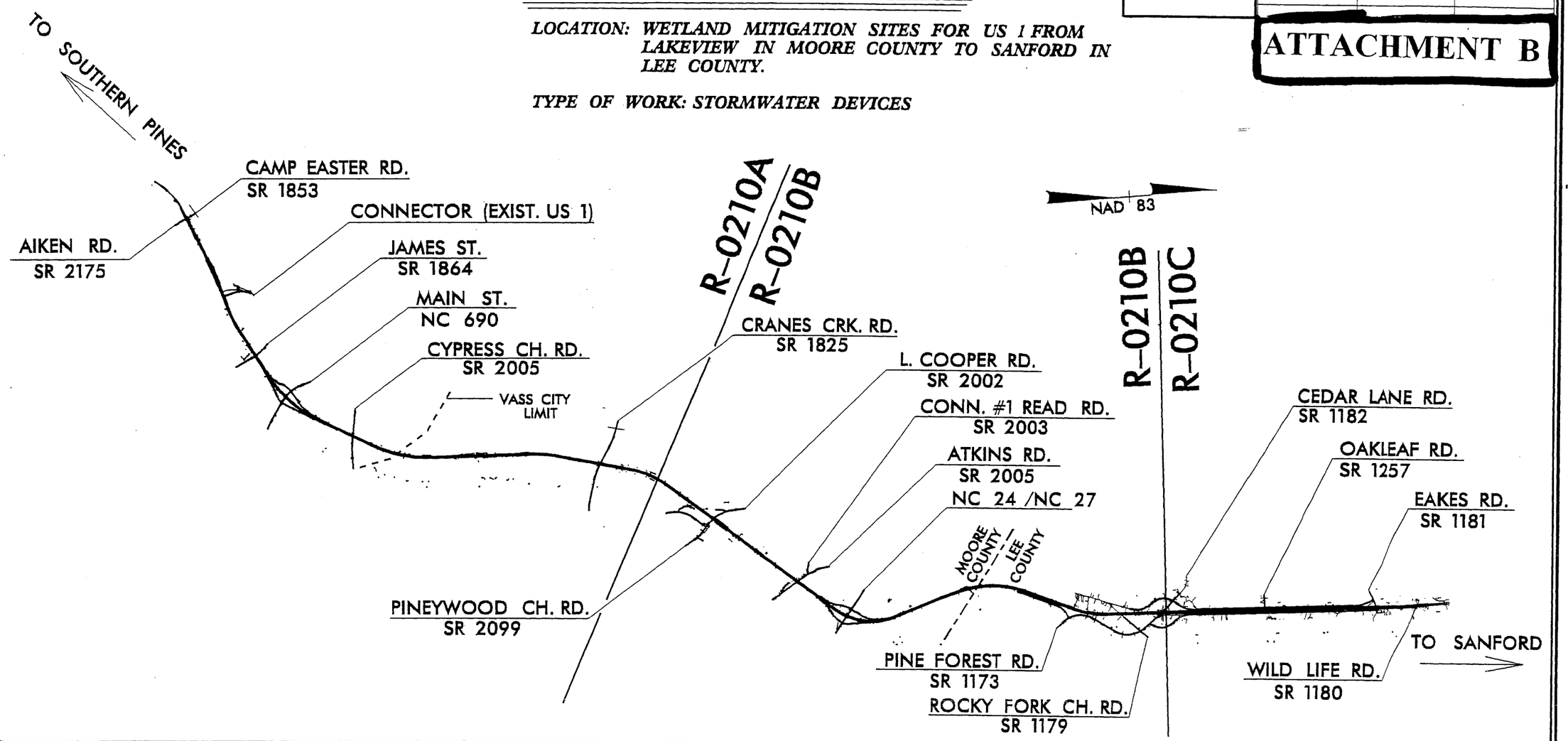

GRAPHIC SCALES		PROJECT LENGTH	Prepared In the Office of: DIVISION OF HIGHWAYS 1000 Birch Ridge Dr., Raleigh, NC 27610		DIVISION OF HIGHWAYS STATE OF NORTH CAROLINA
NOT TO SCALE		TOTAL LENGTH OF STATE PROJECT R-0210WM = 20.207 KM	1995 STANDARD SPECIFICATIONS		
			LETTING DATE:		

05-DEC-2006 13:32
r:\roadway\proj\r-210wm_rdy_tsh01.dgn

PROJECT REFERENCE NO.	SHEET NO.
R-0210C	2
ROADWAY DESIGN ENGINEER	PAVEMENT DESIGN ENGINEER

INCOMPLETE PLANS
DO NOT USE FOR R/W ACQUISITION
PRELIMINARY PLANS
DO NOT USE FOR CONSTRUCTION

SH #2

SPECIAL SWALE W/RIP RAP BERM -TYPICAL-

USE TYPICAL

-L- STA. 28+80 Lt TO STA. 29+10 Lt. R-0210 C*
-L- STA. 30+50 Lt TO 31+20 Lt R-0210 C

*NOTE: REMOVE 8'+/- OF 15" RCP AT -L- STA 29+10 Lt

PLAN VIEW

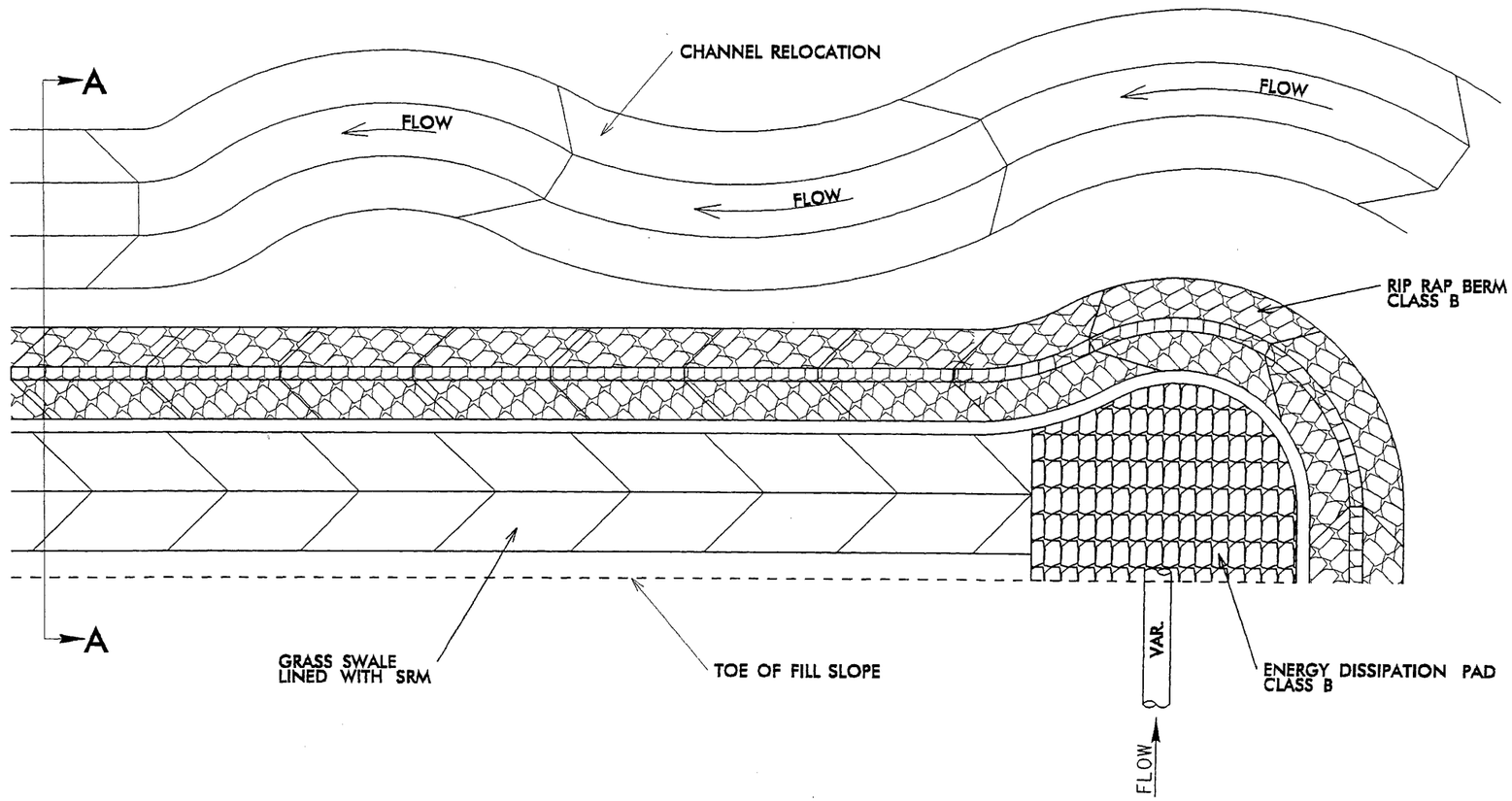

SECTION A-A

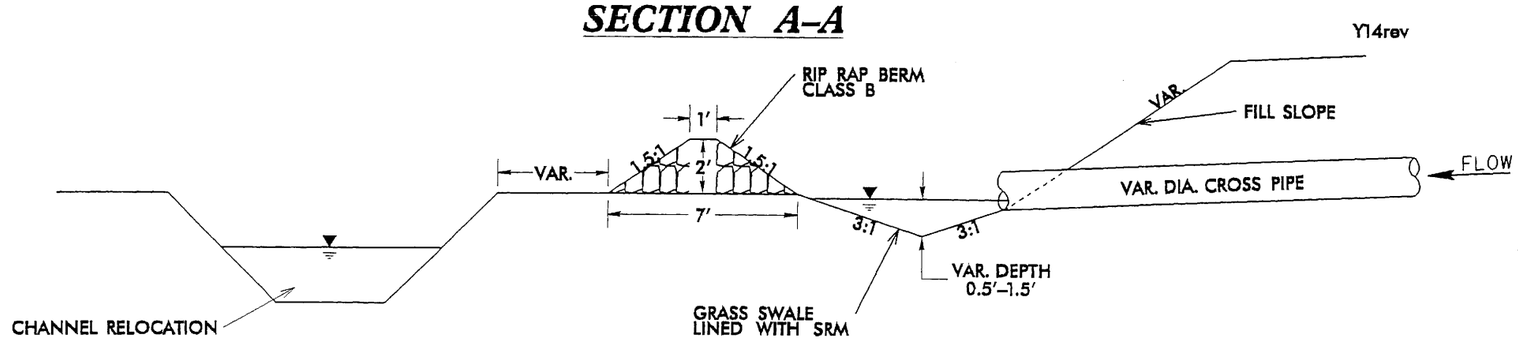

6/2/99

DEC-2006 13:43
documents and settings\csharpless.dot\desktop\r210stuff\r0210c_hyd_det_swale.dgn

PROJECT REFERENCE NO.	SHEET NO.
R-0210WM	4
R-210 A	6
ROADWAY DESIGN ENGINEER	HYDRAULICS ENGINEER

METRIC

CONST.REV.

R/W REV.

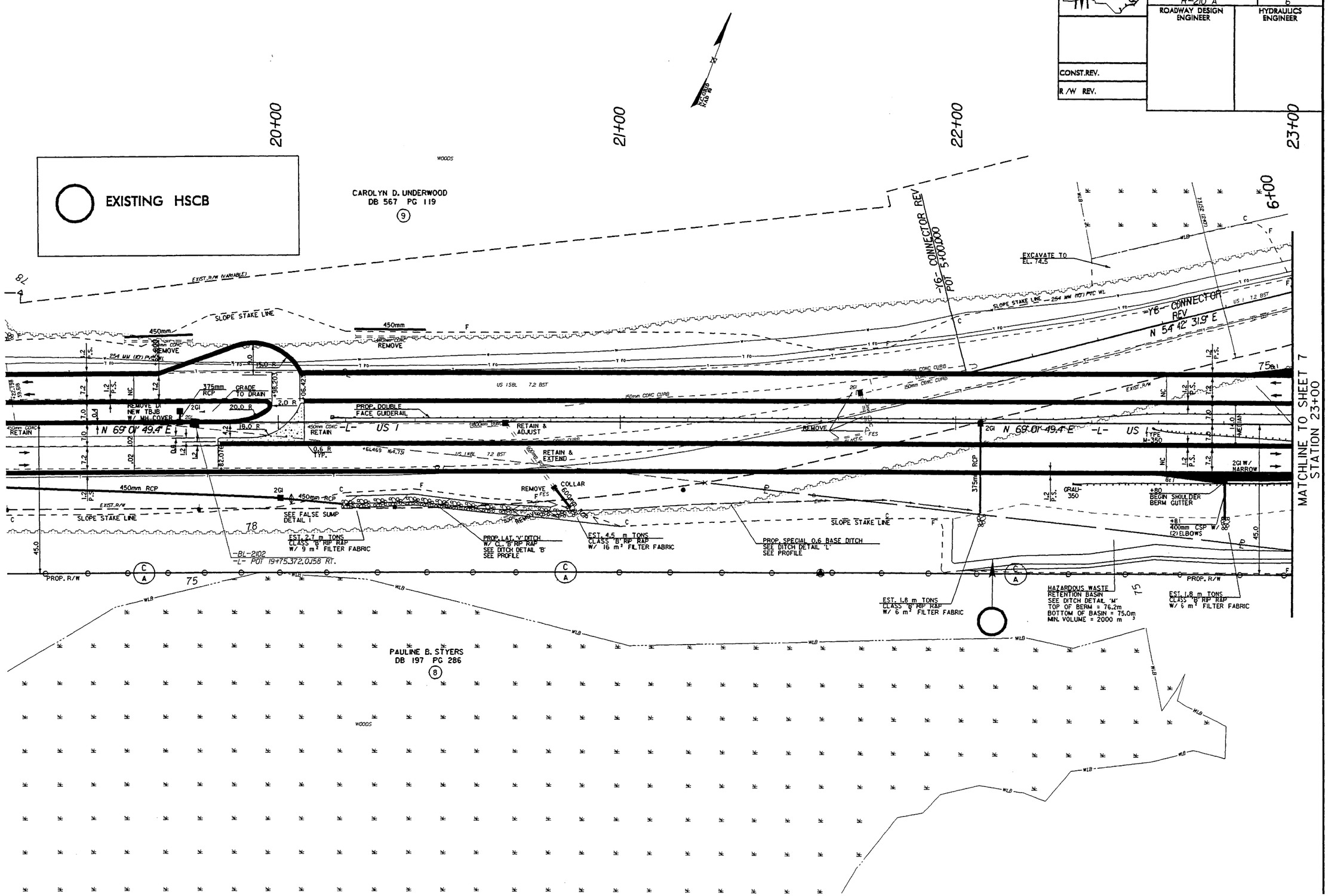

05-DEC-2006 13:32
s:\roadway\proj\r-210wm_r-dg_psh04.dgn
$$$$ENGINEERS$$$$

METRIC	PROJECT REFERENCE NO.	SHEET NO.
	R-0210WM	5
	R-0210A	7
	ROADWAY DESIGN ENGINEER	HYDRAULICS ENGINEER
CONST.REV.		
R/W REV.		

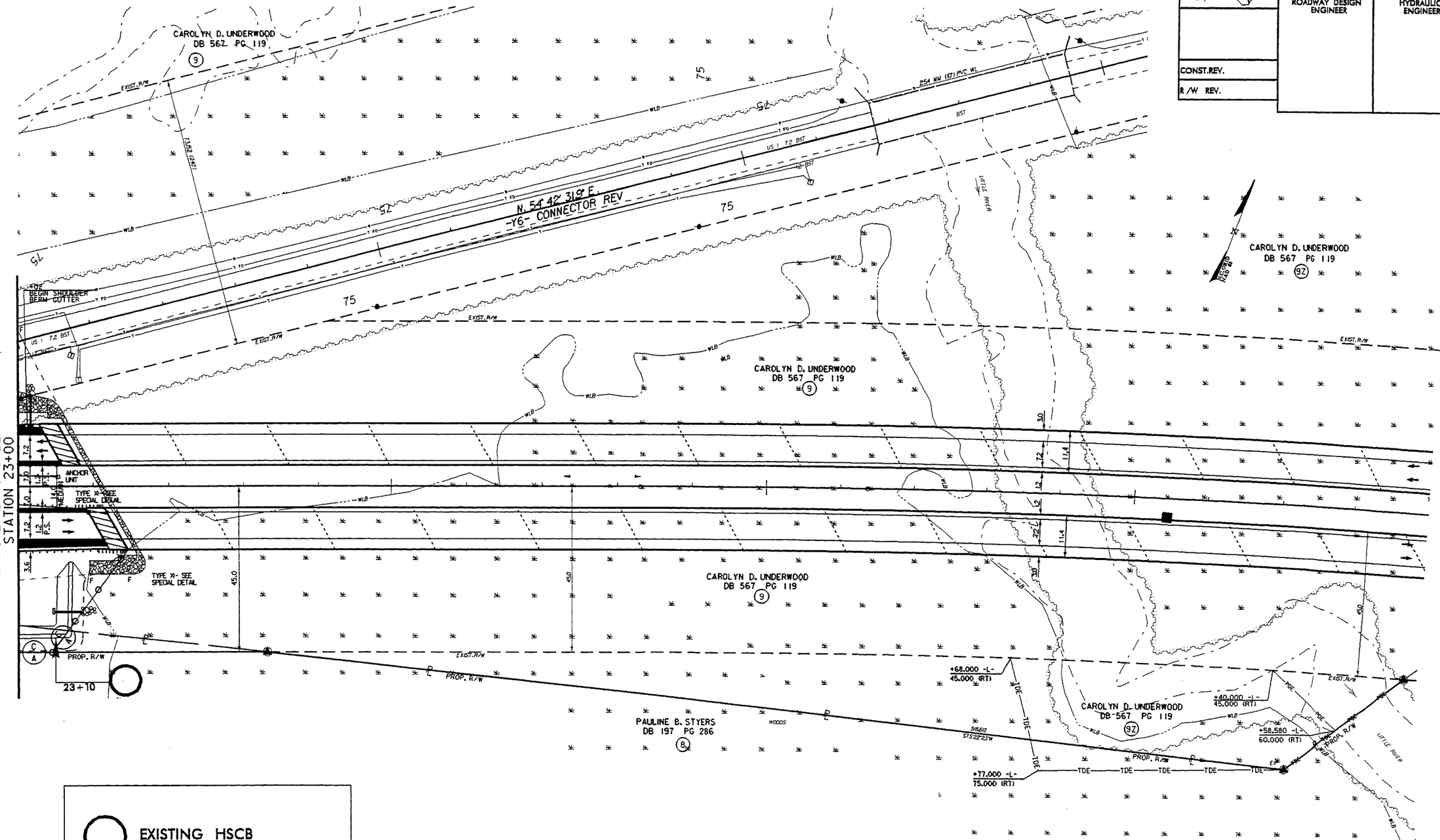

REVISIONS

8/17/99

05-DEC-2006 13:32
r:\roadway\proj\r-0210wm_rdy_psht05.dgn
$$$$USERNAME$$$$

PROJECT REFERENCE NO.	SHEET NO.
R-0210WM	6
R-0210A	9
ROADWAY DESIGN ENGINEER	HYDRAULICS ENGINEER

CONST.REV.

R /W REV.

REVISIONS

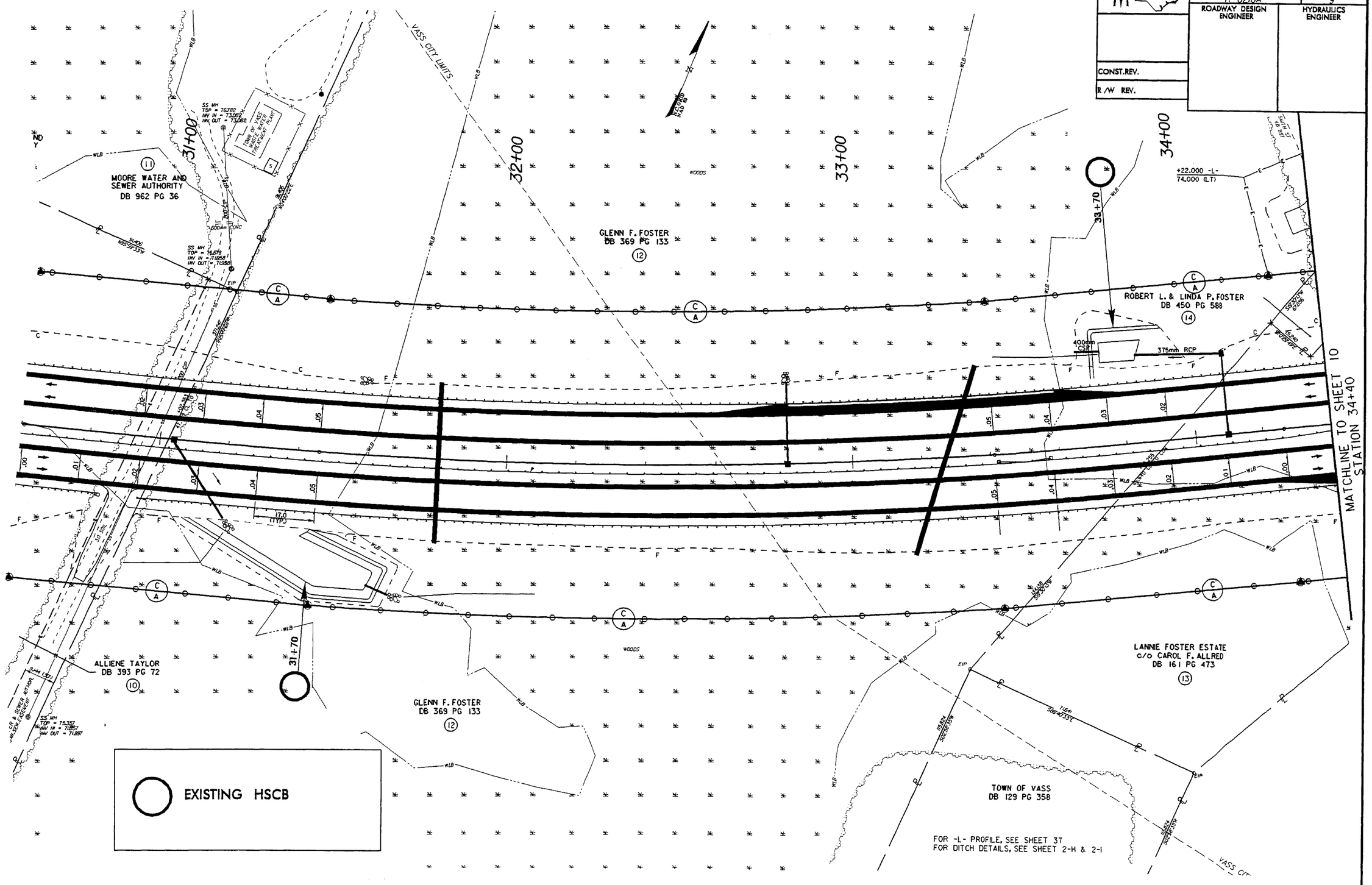

05-DEC-2006 13:32
r:\roadway\proj\r-210wm_rdy_psh06.dgn
$$$$USERNAME$$$$

PROJECT REFERENCE NO.	SHEET NO.
R-0210WM	7
R-0210A	10
ROADWAY DESIGN ENGINEER	HYDRAULICS ENGINEER

METRIC

CONST.REV.

R/W REV.

REVISIONS

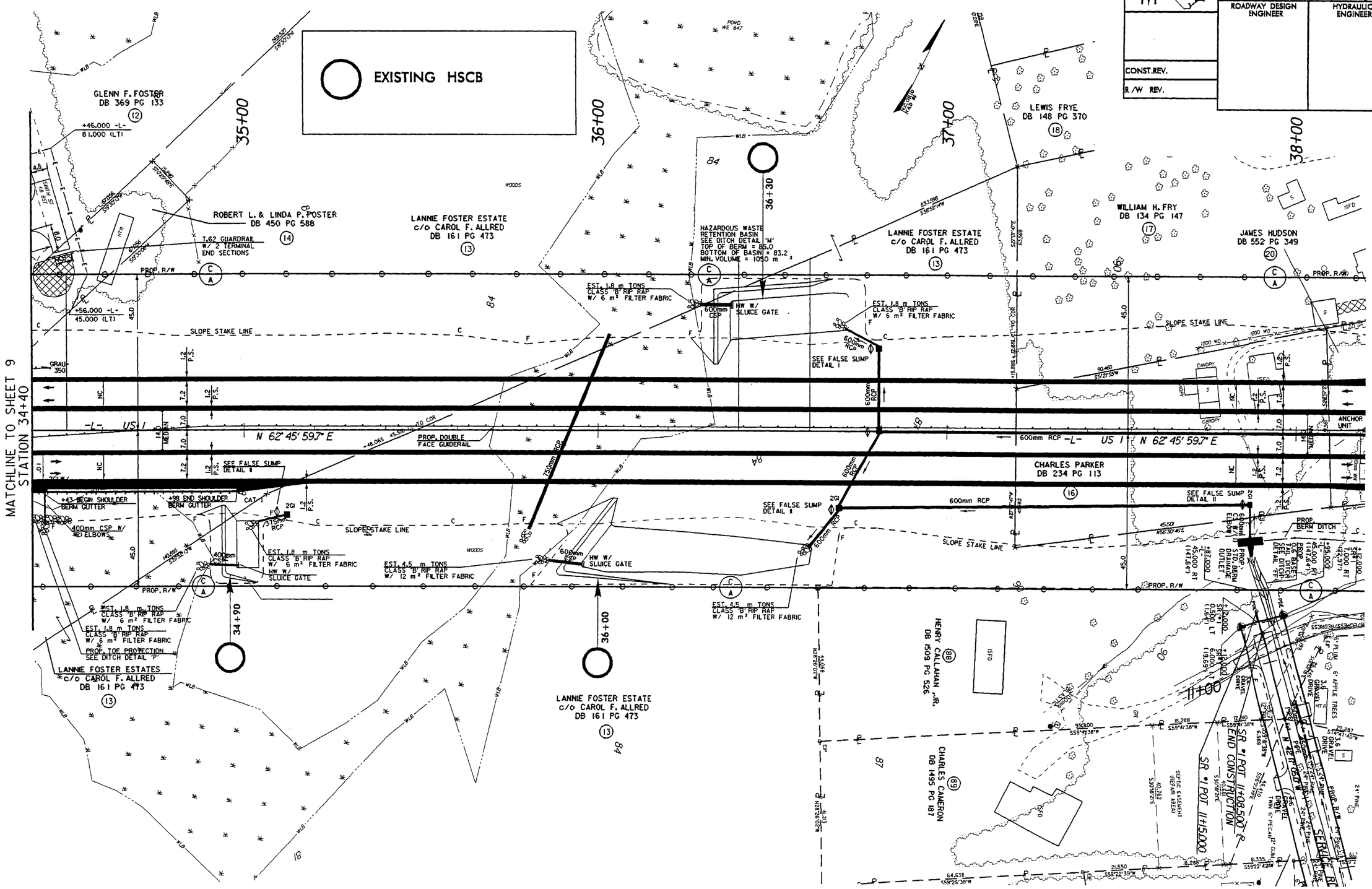

06-DEC-2006 13:33
c:\pwworking\ecb1\r0210wm_rdy_ch07.dgn
$$$$USERNAME$$$$

PROJECT REFERENCE NO.	SHEET NO.
R-0210WM	8
R-0210A	14
ROADWAY DESIGN ENGINEER	HYDRAULICS ENGINEER

METRIC

CONST.REV.

R/W REV.

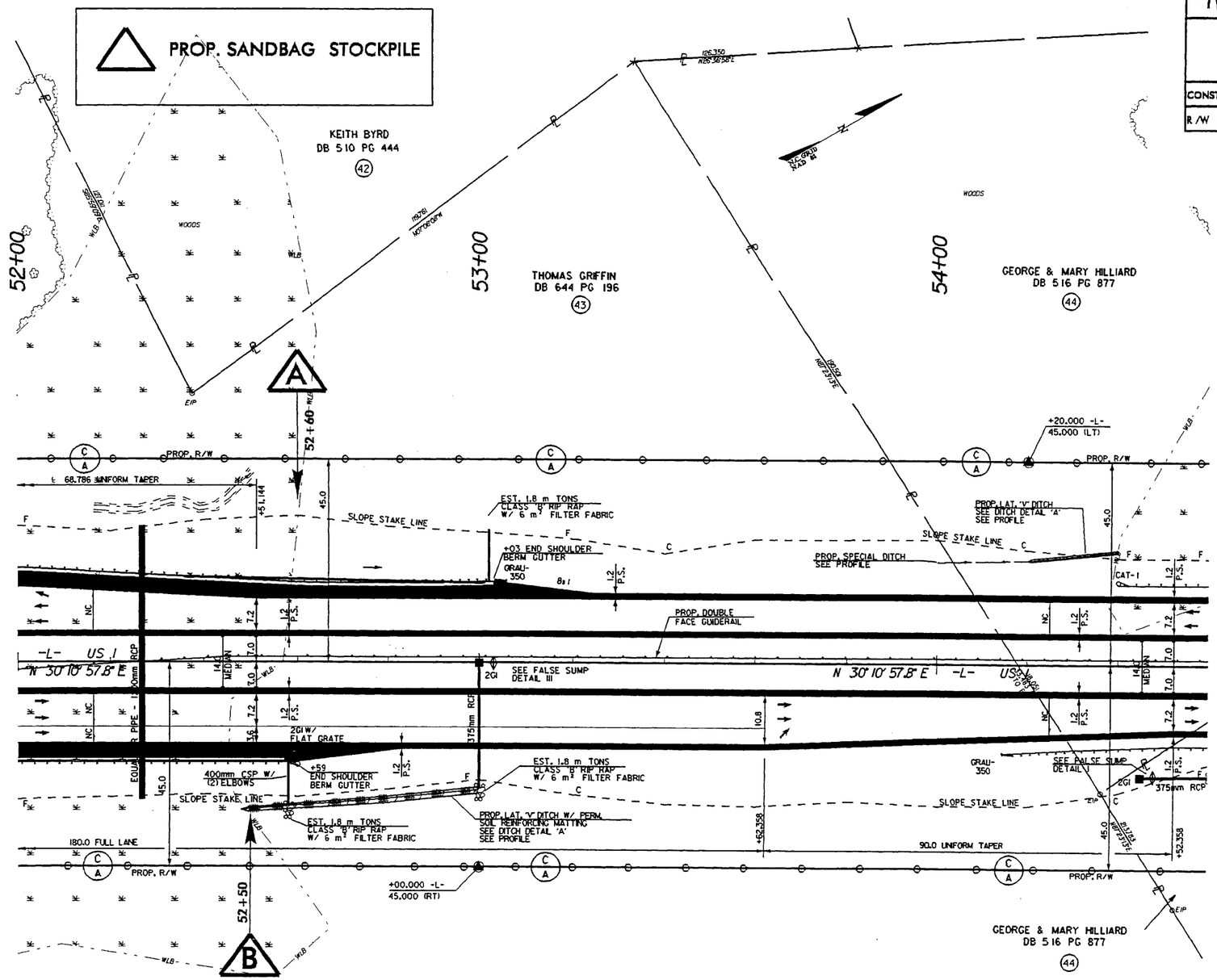

REVISIONS

05-DEC-2006 13:27
r:\roadway\proj\r2c06b-1.dgn
$$$$USERNAME$$$$

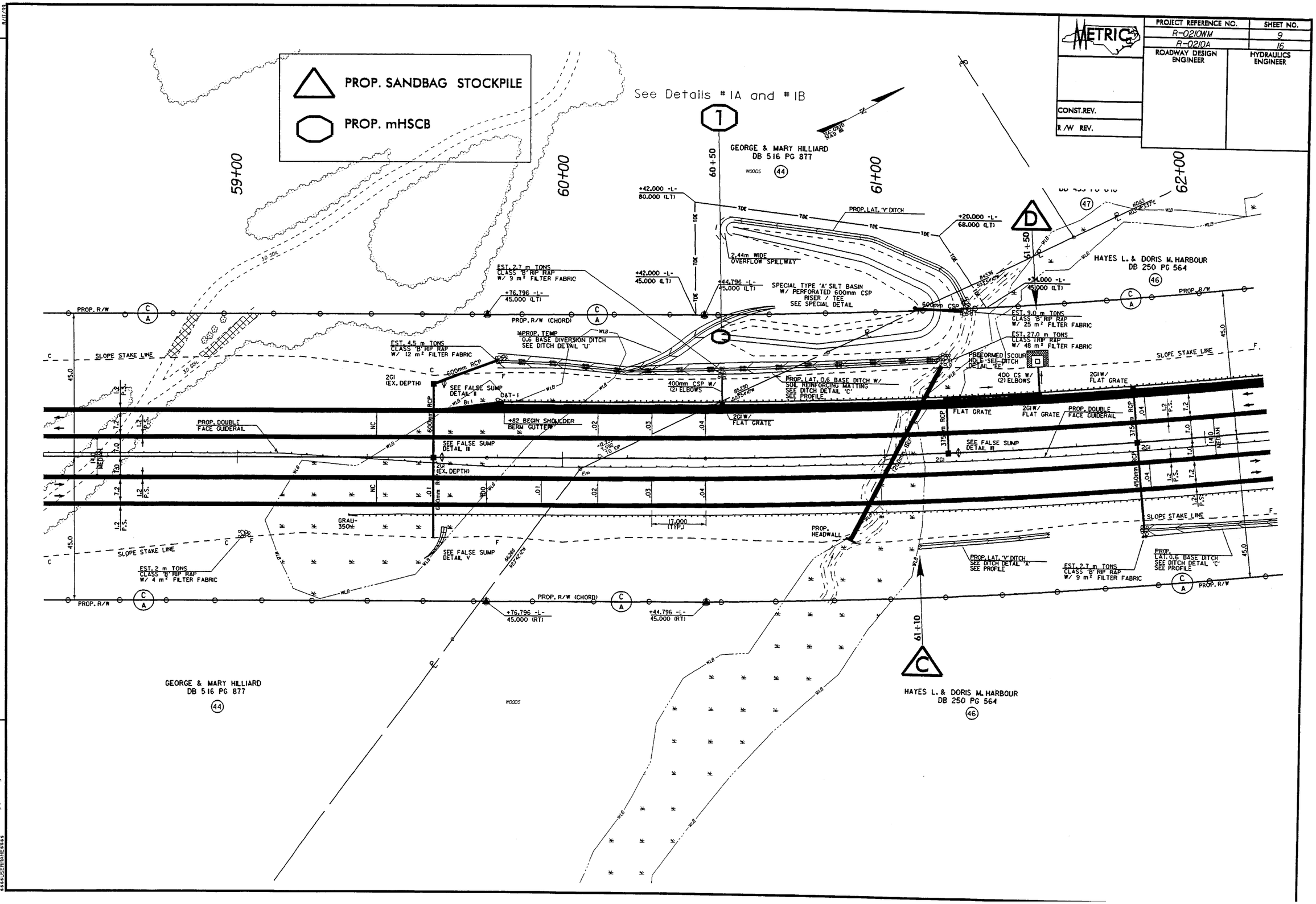

REVISIONS

05-DEC-2006 13:28
r:\roadway\proj\r-210wm_Rdy_psh09.dgn
$$$$USERNAME$$$$

PROJECT REFERENCE NO.	SHEET NO.
R-0210WM	10
R-0210A	17
ROADWAY DESIGN ENGINEER	HYDRAULICS ENGINEER

METRIC

CONST.REV.

R/W REV.

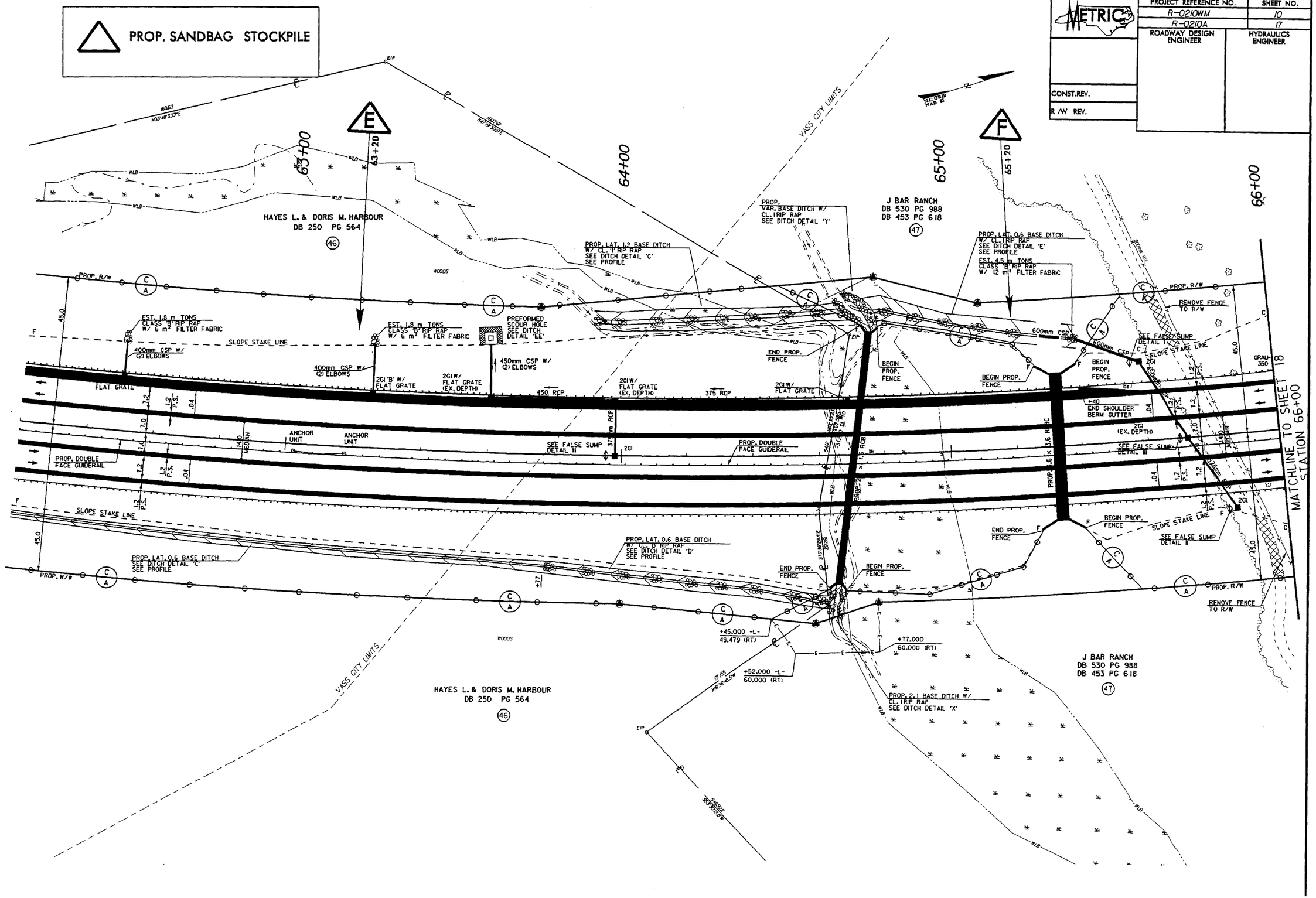

REVISIONS

8/17/99

05-DEC-2006 13:28
r:\roadway\proj\r0210wm_rdy_psh10.dgn

PROJECT REFERENCE NO.	SHEET NO.
R-0210WM	11
R-0210A	18
ROADWAY DESIGN ENGINEER	HYDRAULICS ENGINEER

METRIC

CONST.REV.

R/W REV.

REVISIONS

TDE AROUND POND				
NO.	LINE	STATION	OFFSET	SIDE
1	-L-	68+13.500	163.000	LT.
2	-L-	68+51.000	166.000	LT.
3	-L-	68+93.000	146.000	LT.
4	-L-	69+96.000	241.000	LT.
5	-L-	70+44.000	213.000	LT.
6	-L-	69+53.000	106.000	LT.

NOT TO SCALE

MATCHLINE TO SHEET 17 STATION 66+00

66+00 67+00 67+20 67+80 68+00 68+10 69+00

N.C. GRID NAD 83

DRAIN POND WE 87.9

NOTE : OWNER INTENDS TO DRAIN POND BEFORE CONSTRUCTION. OTHERWISE CONTRACTOR TO DRAIN.

J BAR RANCH
DB 530 PG 988
DB 453 PG 618

PROP. R/W

SLOPE STAKE LINE

+24.000 -L-
45.000 (LT)

REMOVE FENCE TO R/W

PROP. TOE PROTECTION SEE DITCH DETAIL 'O'

EST. 1.8 m TONS CLASS 'B' RIP RAP W/ 6 m² FILTER FABRIC

400mm CSP W/ (2) ELBOWS

FLAT GRATE

+42 BEGIN SHOULDER BERM GUTTER

PROP. LAT. 1.0 BASE DITCH W/ CL. 'T' RIP RAP SEE DITCH DETAIL 'R' SEE PROFILE

PROP. LAT. 0.6 BASE DITCH W/ CL. 'B' RIP RAP SEE DITCH DETAIL 'D' SEE PROFILE

PROP. HEADWALL

+50 END SHOULDER BERM GUTTER

PROP. SPECIAL DITCH SEE PROFILE

EST. 1.8 m TONS CLASS 'B' RIP RAP W/ 6 m² FILTER FABRIC

PROP. DOUBLE FACE GUIDERAIL

ANCHOR UNIT

SEE FALSE SUMP DETAIL III

17.000 (TYP.)

EST. 24.0 m TONS CLASS 'I' RIP RAP W/ 42 m² FILTER FABRIC

PROP. LAT. 'V' DITCH W/ CL. 'B' RIP RAP SEE DITCH DETAIL 'B' SEE PROFILE

PROP. LAT. 'V' DITCH SEE DITCH DETAIL 'A' SEE PROFILE

PROP. TOE PROTECTION SEE DITCH DETAIL 'O'

CANOPY

ISFD

WOODS

STREAM APPROX.

PROP. SANDBAG STOCKPILE

05-DEC-2006 13:28
s:\ROADWAY\Proj\R-0210m_rdg_pshi1.dgn

METRIC	PROJECT REFERENCE NO.	SHEET NO.
	R-0210WM	12
	R-0210A	18A
	ROADWAY DESIGN ENGINEER	HYDRAULICS ENGINEER
CONST.REV.		
R/W REV.		

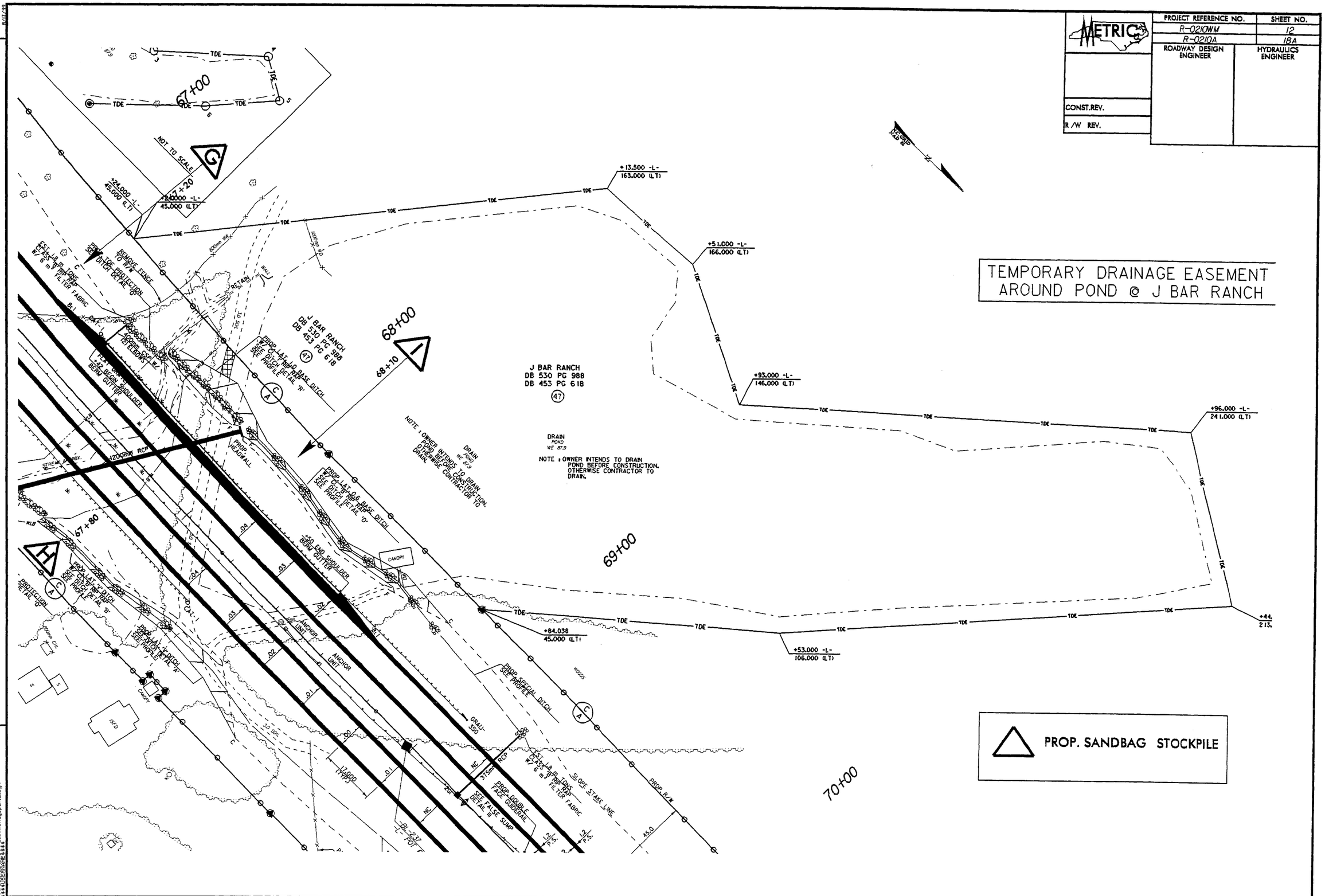

REVISIONS

05-DEC-2006 13:28
r:\roadway\proj\r-210wm_Rdy_psh12.dgn
$$$$USERNAME$$$$

PROJECT REFERENCE NO.	SHEET NO.
R-0210WM	13
R-0210A	20
ROADWAY DESIGN ENGINEER	HYDRAULICS ENGINEER

CONST.REV.

R /W REV.

REVISIONS

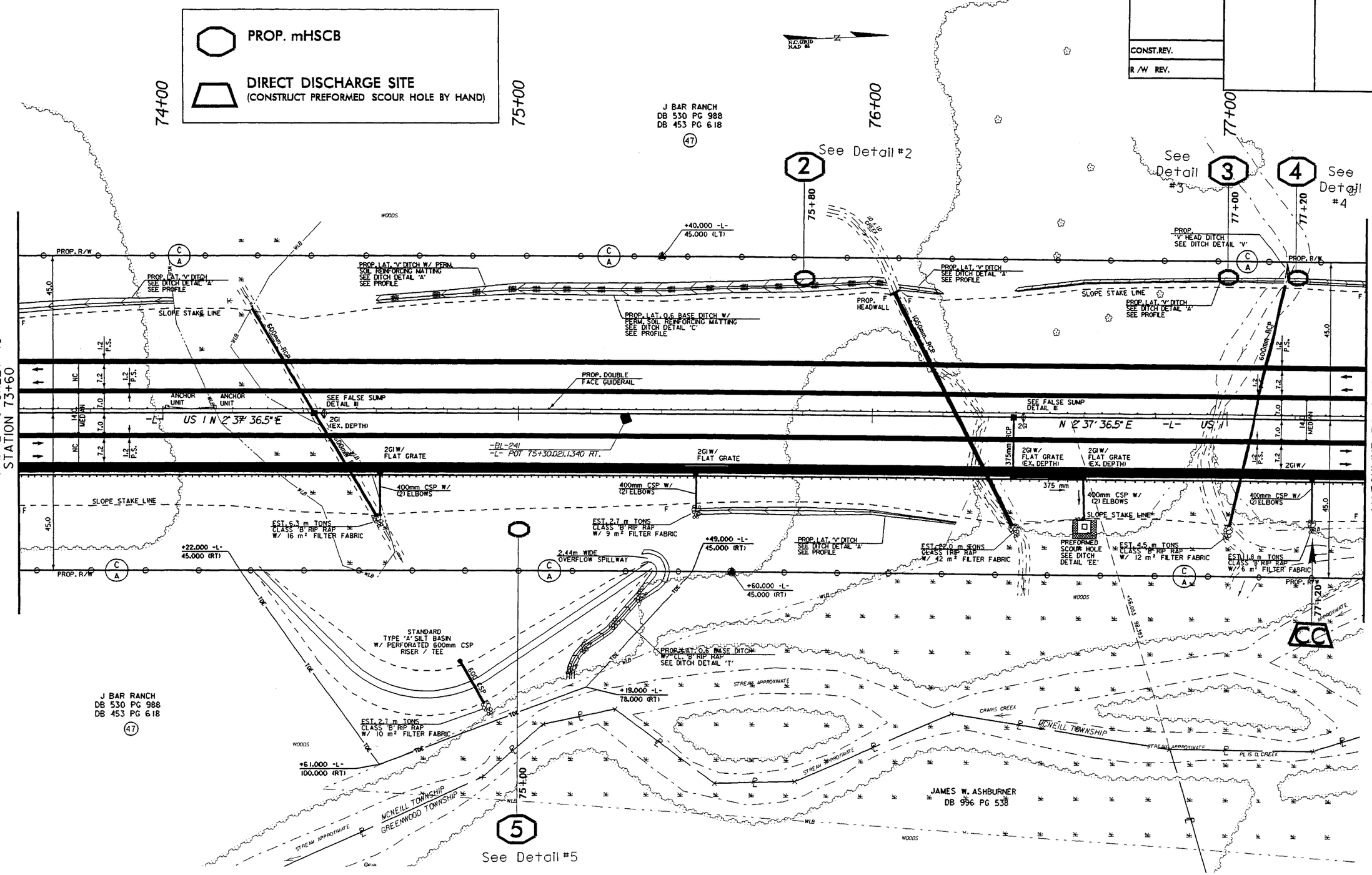

12-DEC-2006 09:14
C:\PROGRAM FILES\v210wm_Rdy_psht13.dgn
$$$$USERNAME$$$$

PROJECT REFERENCE NO.	SHEET NO.
R-0210WM	14
R-0210A	21
ROADWAY DESIGN ENGINEER	HYDRAULICS ENGINEER

CONST.REV.

R/W REV.

REVISIONS

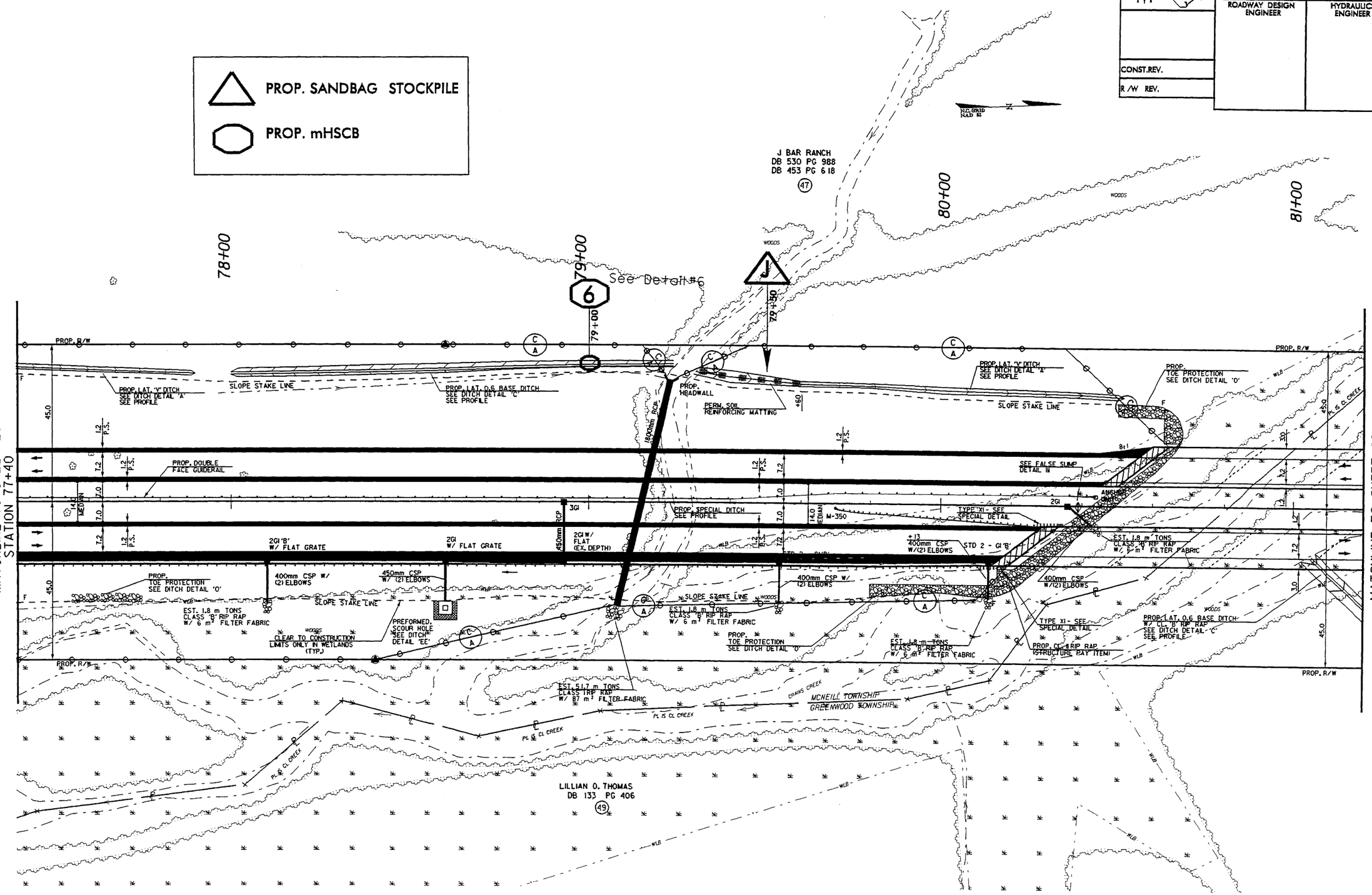

05-DEC-2006 13:28
s:\hydraulics\hydraulics\projects\r-0210wm_r-0210a\r-0210wm_r-dg_psh14.dgn

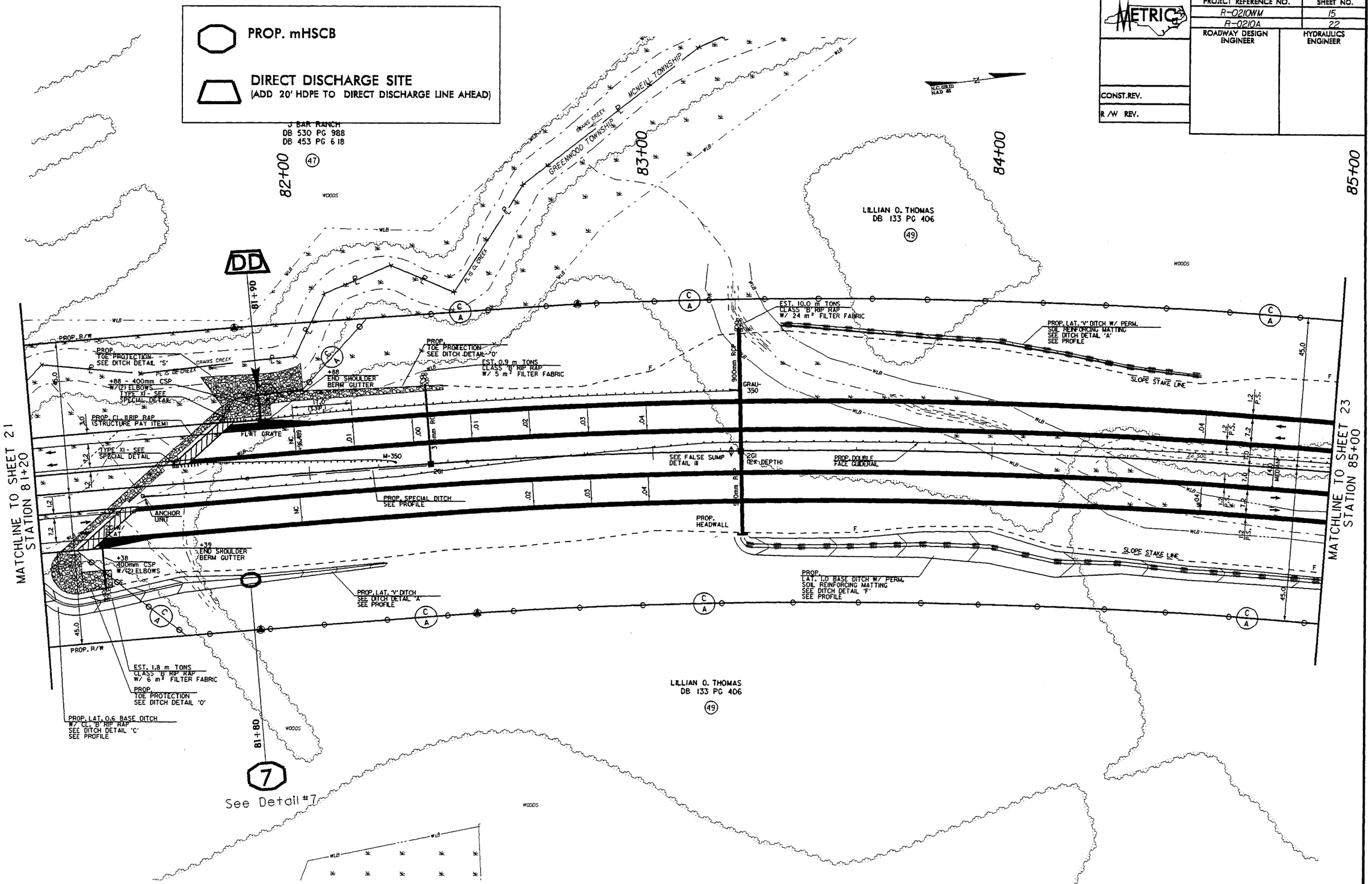

REVISIONS

12-DEC-2006 09:14

PROJECT REFERENCE NO.	SHEET NO.
R-0210WM	16
R-0210A	23
ROADWAY DESIGN ENGINEER	HYDRAULICS ENGINEER

METRIC

CONST.REV.

R /W REV.

REVISIONS

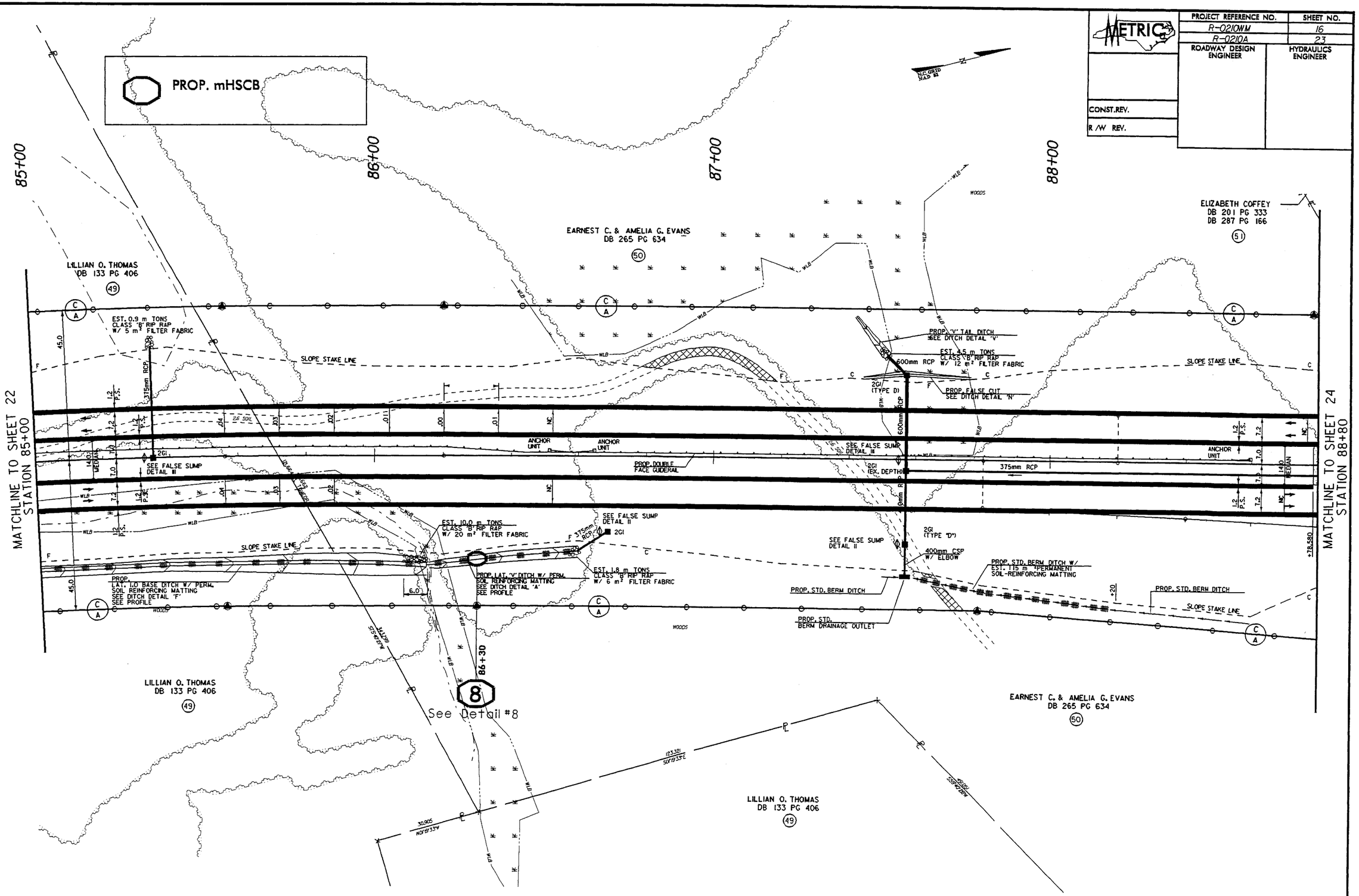

05-DEC-2006 13:09
$$$$USERNAME$$$$
$$$$USERDIR$$$$\r-0210wm_r0210a_Rdy_psh16.dgn

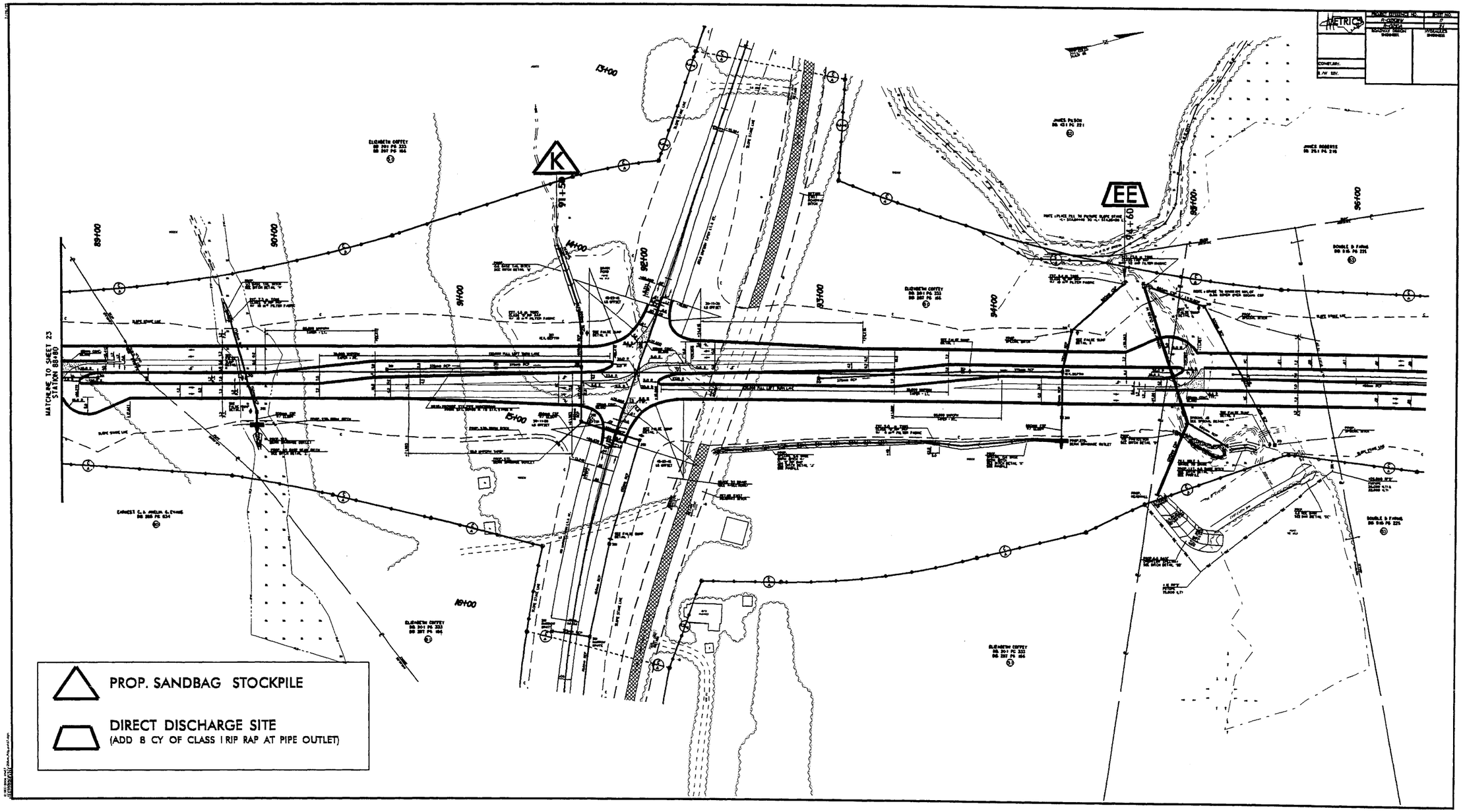

METRIC
PROJECT REFERENCE NO.
R-0000
R-0000
ROADWAY DESIGN
HYDRAULICS
CONST.REV.
R/W REV.
K
EE
91+50
94+60
89+00
90+00
91+00
92+00
93+00
94+00
95+00
96+00
13+00
14+00
15+00
16+00
MATCHLINE TO SHEET 23
STATION 88+80
PROP. SANDBAG STOCKPILE
DIRECT DISCHARGE SITE
(ADD 8 CY OF CLASS I RIP RAP AT PIPE OUTLET)

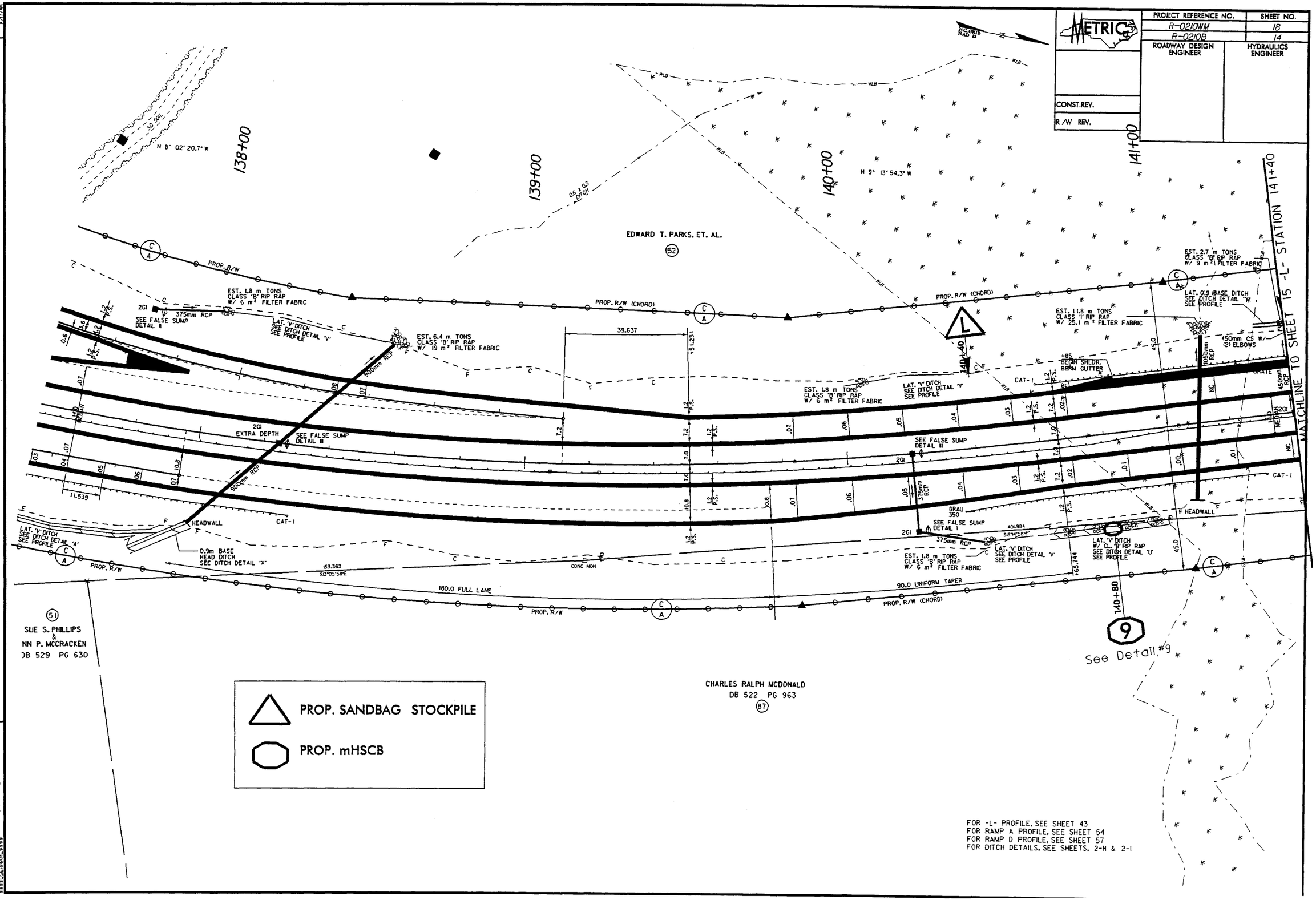

METRIC
PROJECT REFERENCE NO.
R-0210WM
R-0210B
SHEET NO.
18
14
ROADWAY DESIGN ENGINEER
HYDRAULICS ENGINEER
CONST.REV.
R/W REV.
N.C. GRID NAD 83
138+00
139+00
140+00
141+00
N 8° 02' 20.7" W
N 9° 13' 54.3" W
EDWARD T. PARKS, ET. AL.
52
PROP. R/W
PROP. R/W (CHORD)
EST. 1.8 m TONS CLASS 'B' RIP RAP W/ 6 m² FILTER FABRIC
EST. 6.4 m TONS CLASS 'B' RIP RAP W/ 19 m² FILTER FABRIC
EST. 2.7 m TONS CLASS 'B' RIP RAP W/ 9 m² FILTER FABRIC
EST. 11.8 m TONS CLASS 'I' RIP RAP W/ 25.1 m² FILTER FABRIC
LAT. 0.9 BASE DITCH SEE DITCH DETAIL 'K' SEE PROFILE
LAT. 'V' DITCH SEE DITCH DETAIL 'V' SEE PROFILE
SEE FALSE SUMP DETAIL II
SEE FALSE SUMP DETAIL III
2GI EXTRA DEPTH
375mm RCP
900mm RCP
450mm CS W/ (2) ELBOWS
BEGIN SHLDR. BERM GUTTER
CAT-1
HEADWALL
0.9m BASE HEAD DITCH SEE DITCH DETAIL 'X'
LAT. 'V' DITCH SEE DITCH DETAIL 'A' SEE PROFILE
LAT. 'V' DITCH W/ CL. 'B' RIP RAP SEE DITCH DETAIL 'U' SEE PROFILE
EST. 1.8 m TONS CLASS 'B' RIP RAP W/ 6 m² FILTER FABRIC
GRAU 350
180.0 FULL LANE
90.0 UNIFORM TAPER
CONC MON
MATCHLINE TO SHEET 15 -L- STATION 141+40
140+80
9
See Detail #9
51
SUE S. PHILLIPS & NN P. MCCRACKEN DB 529 PG 630
CHARLES RALPH MCDONALD DB 522 PG 963
87
PROP. SANDBAG STOCKPILE
PROP. mHSCB
FOR -L- PROFILE, SEE SHEET 43
FOR RAMP A PROFILE, SEE SHEET 54
FOR RAMP D PROFILE, SEE SHEET 57
FOR DITCH DETAILS, SEE SHEETS, 2-H & 2-I
REVISIONS

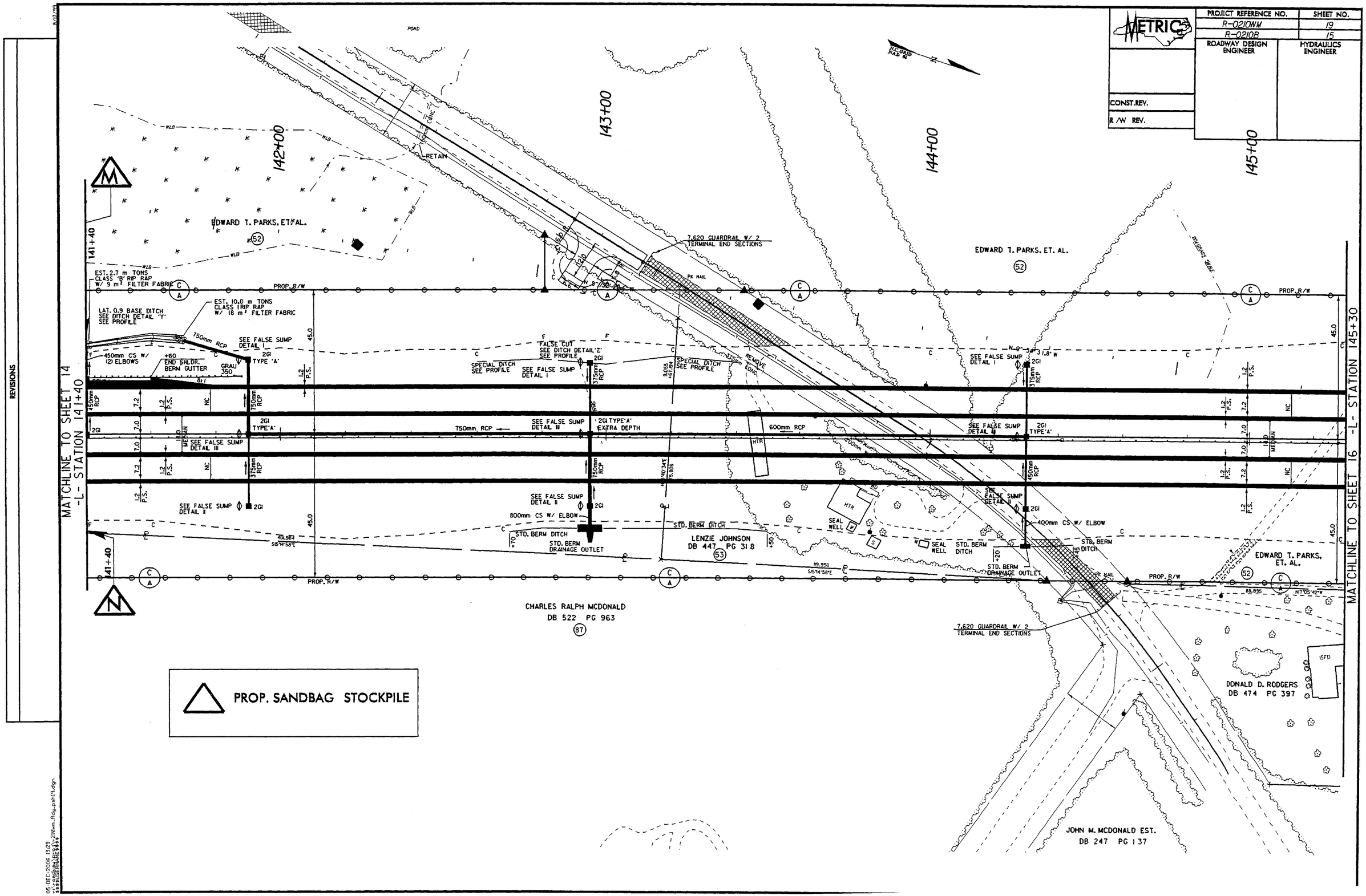

METRIC
PROJECT REFERENCE NO.
R-0210WM
R-0210B
SHEET NO.
19
15
ROADWAY DESIGN ENGINEER
HYDRAULICS ENGINEER
CONST.REV.
R/W REV.
REVISIONS
MATCHLINE TO SHEET 14 -L- STATION 141+40
MATCHLINE TO SHEET 16 -L- STATION 145+30
142+00
143+00
144+00
145+00
EDWARD T. PARKS, ET. AL.
52
7,620 GUARDRAIL W/ 2 TERMINAL END SECTIONS
PK NAIL
PROP. R/W
EST. 2.7 m TONS CLASS 'B' RIP RAP W/ 9 m² FILTER FABRIC
EST. 10.0 m TONS CLASS I RIP RAP W/ 18 m² FILTER FABRIC
LAT. 0.9 BASE DITCH SEE DITCH DETAIL 'Y' SEE PROFILE
750mm RCP
450mm CS W/ (2) ELBOWS
END SHLDR. BERM GUTTER
GRAU 350
SEE FALSE SUMP DETAIL I
2GI TYPE 'A'
FALSE CUT SEE DITCH DETAIL 'Z' SEE PROFILE
SPECIAL DITCH SEE PROFILE
SEE FALSE SUMP DETAIL I
375mm RCP
REMOVE
SEE FALSE SUMP DETAIL III
2GI TYPE 'A' EXTRA DEPTH
600mm RCP
SEE FALSE SUMP DETAIL II
800mm CS W/ ELBOW
STD. BERM DITCH
STD. BERM DRAINAGE OUTLET
LENZIE JOHNSON DB 447 PG 318
53
SEAL WELL
400mm CS W/ ELBOW
CHARLES RALPH MCDONALD DB 522 PG 963
87
7,620 GUARDRAIL W/ 2 TERMINAL END SECTIONS
DONALD D. RODGERS DB 474 PG 397
ISFD
JOHN M. MCDONALD EST. DB 247 PG 137
PROP. SANDBAG STOCKPILE

PROJECT REFERENCE NO.	SHEET NO.
R-0210WM	20
R-0210B	18
ROADWAY DESIGN ENGINEER	HYDRAULICS ENGINEER

METRIC

CONST.REV.

R/W REV.

REVISIONS

8/17/99

PROP. SANDBAG STOCKPILE

BETTY KRAMER (57A)

MOORE COUNTY

LEE COUNTY

CARL MITCHELL SIMPSON (57)

GRACE WEIMER, ET. AL.
DB 488 PG 958
DB 488 PG 960 (58)

NC GRID NAD 83

153+00 — 154+00 — 155+00 — 156+00

MATCHLINE TO SHEET 17 -L- STATION 153+00

MATCHLINE TO SHEET 19 -L- STATION 156+80

153+15

PROP. R/W

LAT. "V" DITCH SEE DITCH DETAIL 'A' SEE PROFILE

LAT. "V" DITCH SEE DITCH DETAIL 'A' SEE PROFILE

LAT. 0.6 BASE DITCH SEE DITCH DETAIL 'C' SEE PROFILE

LAT. 0.6 BASE DITCH W/ CL. 'B' RIP RAP SEE DITCH DETAIL 'D' SEE PROFILE

STD. BERM DRAINAGE OUTLET

STD. BERM DITCH

450mm CS W/(2) ELBOWS

SEE FALSE SUMP DETAIL I

SEE FALSE SUMP DETAIL III

SEE FS DET. II

SEE FS DETAIL IV

2GI W/ FLAT GRATE

375mm RCP

600mm RCP

450mm RCP

400 CS W/ (2) ELBOWS

CAT-1 8:1

#77 END SHLDR. BERM GUTTER

EST. 4.5 m TONS CLASS 'B' RIP RAP W/ 15 m² FILTER FABRIC

EST. 1.8 m TONS CLASS 'B' RIP RAP W/ 6 m² FILTER FABRIC

EST. 7.2 m TONS CLASS 'I' RIP RAP W/ 20 m² FILTER FABRIC

2GI EXTRA DEPTH W/ FLAT GRATE

600mm CS W/ (2) ELBOWS

SEE FALSE SUMP DETAIL II

LAT. "V" DITCH SEE DITCH DETAIL 'A' SEE PROFILE

45.0

1:2 P.S.

7.2

7.0

14.0 MEDIAN

.05

20.079

S36°18'01"E

EP

SNAKE

WLB

SOIL

CARL MITCHELL SIMPSON (57)

GRACE WEIMER, ET. AL.
DB 488 PG 958
DB 488 PG 960 (58)

S57°03'45"E

S51°36'56"E

05-DEC-2006 13:29
r:\roadway\proj\r0210wm_rdy_psh20.dgn
$$$$USERNAME$$$$

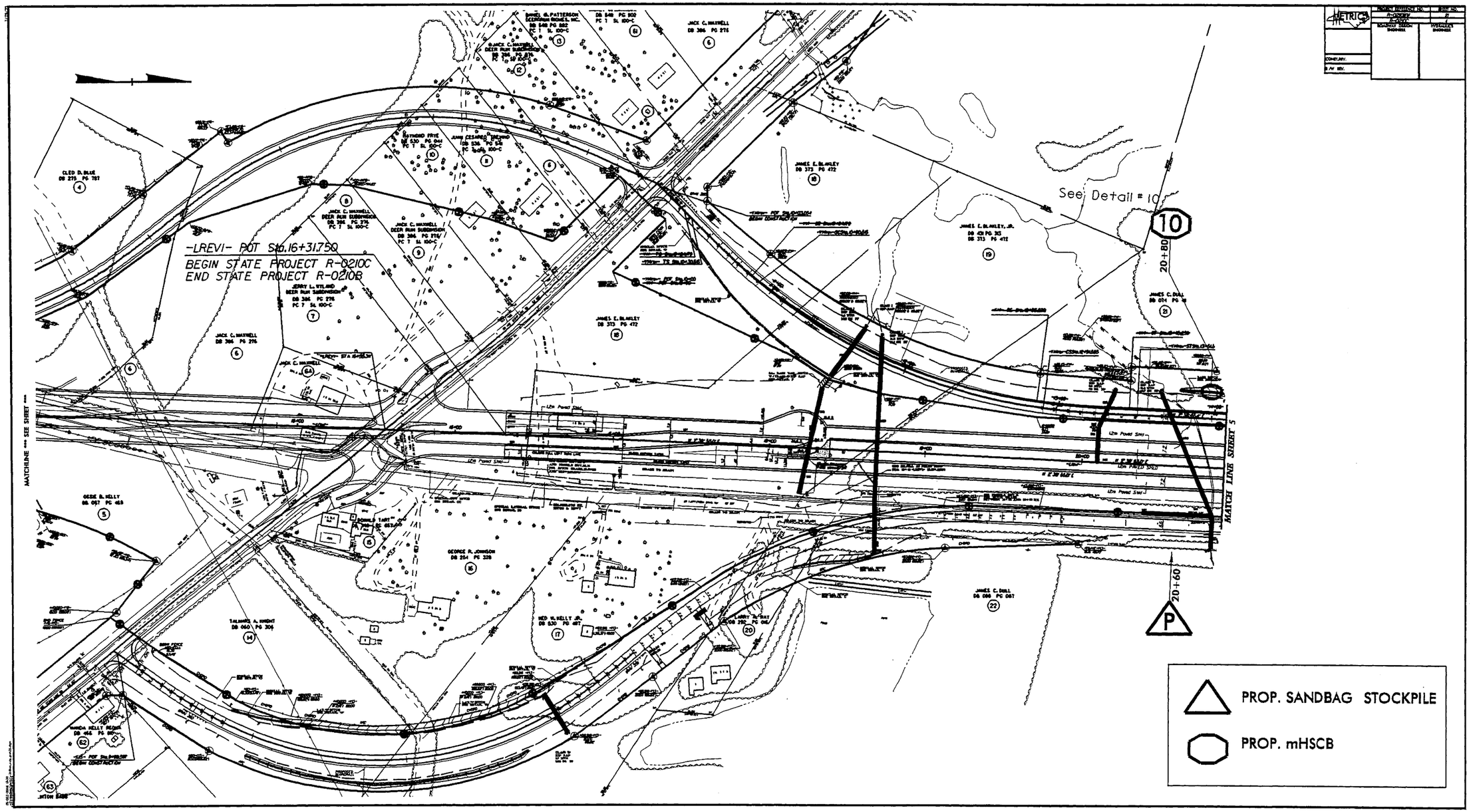
-LREVI- POT Sta.16+31.759
BEGIN STATE PROJECT R-0210C
END STATE PROJECT R-0210B
See Detail # 10
10
20+80
20+60
MATCHLINE SEE SHEET 5
MATCH LINE SHEET 5
PROP. SANDBAG STOCKPILE
PROP. mHSCB

PROJECT REFERENCE NO.	SHEET NO.
R-0210WM	22
R-0210C	7
ROADWAY DESIGN ENGINEER	HYDRAULICS ENGINEER

METRIC

CONST. REV.

R/W REV.

REVISIONS

MATCH LINE SHEET 6

MATCH LINE SHEET 8

SEIGMAR MEIER
DB 482 PG 097
(30)

LUTHER D. MADDOX
DB 253 PG 860
(31)

See Special Swale
w/ Rip Rap Berm
-Typical-

AA

BB

R

CHARLES BAKER
DB 279 PG 882
(28)

HARVEY J. HOLLAND
DB 272 PG 161
(27)

DEXTER COX
DB 272 PG 369
(25)

-Y14A-POT Sta. 12+04.306
-Y14rev-POT Sta. 23+26.392

NATURAL CHANNEL DESIGN
SEE DETAILS, SHEET 2-G

SEE PROFILE SHEET 17
FOR SPECIAL DITCH GRADE

CLASS 'B'
RIP RAP
1.8 MTN
5.9 SM FF

CLASS 'B'
RIP RAP
7.2 MTN
17.6 SM FF

CLASS 'B'
RIP RAP
4.5 MTN
11.7 SM FF

CLASS 'B'
RIP RAP
2.7 MTN
8.4 SM FF

'V' TAIL DITCH
SEE DETAIL 'K'

POOL
SEE DETAILS
SHEET 2-G

SPECIAL DITCH
SEE DETAIL 'C'

SHOULDER BERM GUTTER

1.2m PAVED SHLD

1.2m Paved Shld

BEGIN SHOULDER
BERM GUTTER

EXISTING R/W

US 1 JEFFERSON DAVIS HIGHWAY

REMOVE

GRAU 350

N 2° 36' 55.4" E

N 2° 36' 55.0" E

S 89° 27' 08.1" E

-Y14-
-Y14rev-
-Lrev1-
-L-
-Y13-

22+00
23+00
24+00
25+00
26+00
27+00
28+00
29+00
30+00
31+00
35+00
36+00
37+00
38+00

31+10
30+50
31+60

400 CSP
W/2 ELBOWS

450 CSP
W/2 ELBOWS

JB W/
MHC

2GI
EX. DEPTH = 0.20

SHOULDER BERM GUTTER

CREST

6.4 BST

4.8 BST

SR 1251 OAKLEAF RD

ISFD

ISBKD

S

26
WILLIAM E COLE, et. al.
DB 591 PG 943

(11)
See Detail #11

PROP. SANDBAG STOCKPILE

PROP. mHSCB

GRASS SWALE

12-DEC-2016 09:15
C:\Users\BERNARDESSS\Desktop\R-0210wm_rdy_psh22.dgn
ESSS\BERNARDESSS

PROJECT REFERENCE NO.	SHEET NO.
R-0210WM	23
R-0210C	8
ROADWAY DESIGN ENGINEER	HYDRAULICS ENGINEER

CONST.REV.

R/W REV.

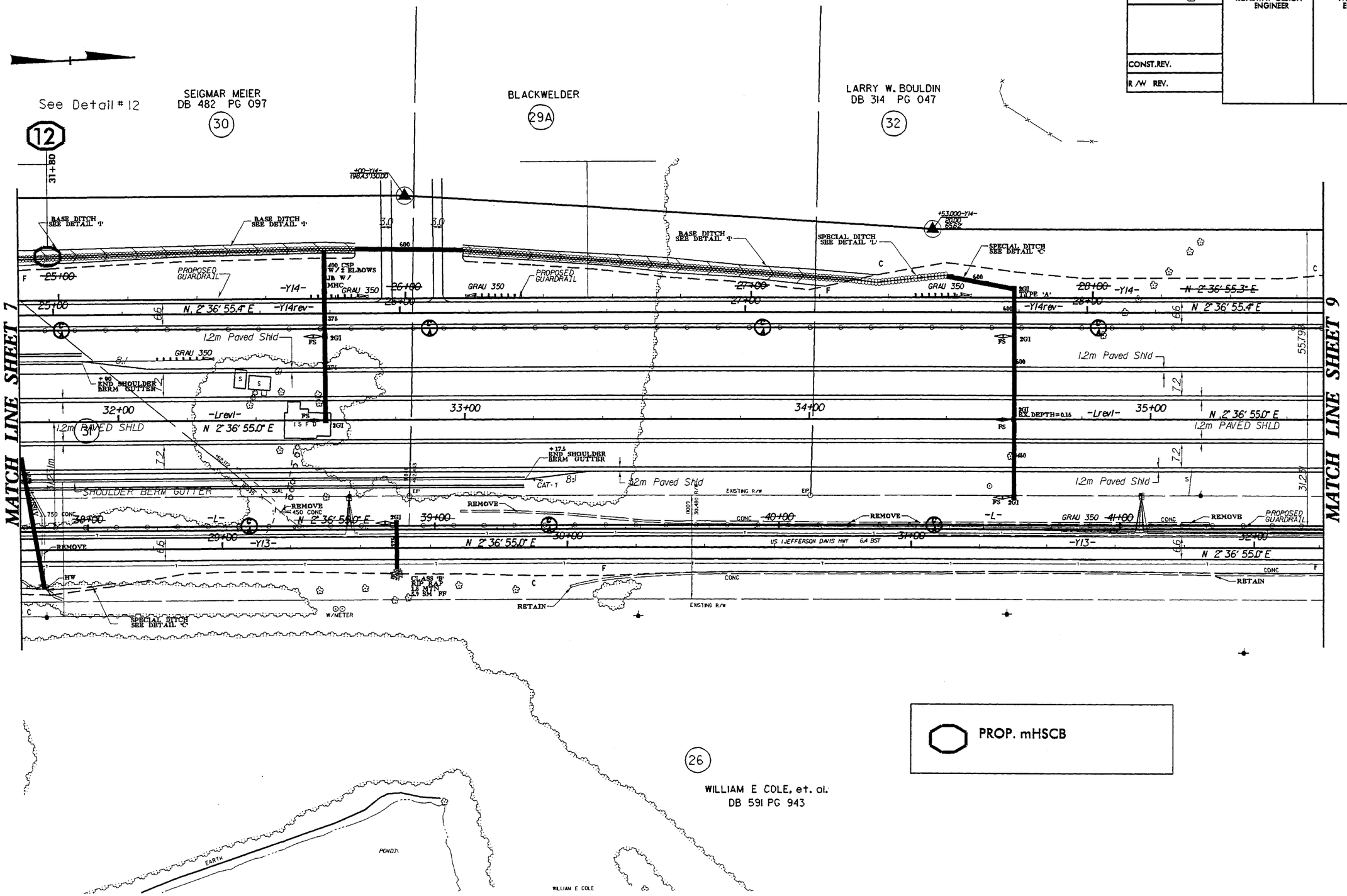

REVISIONS

8/17/99

5-DEC-2006 13:30

PROJECT REFERENCE NO.	SHEET NO.
R-0210WM	24
R-0210C	9
ROADWAY DESIGN ENGINEER	HYDRAULICS ENGINEER

METRIC

CONST.REV.

R/W REV.

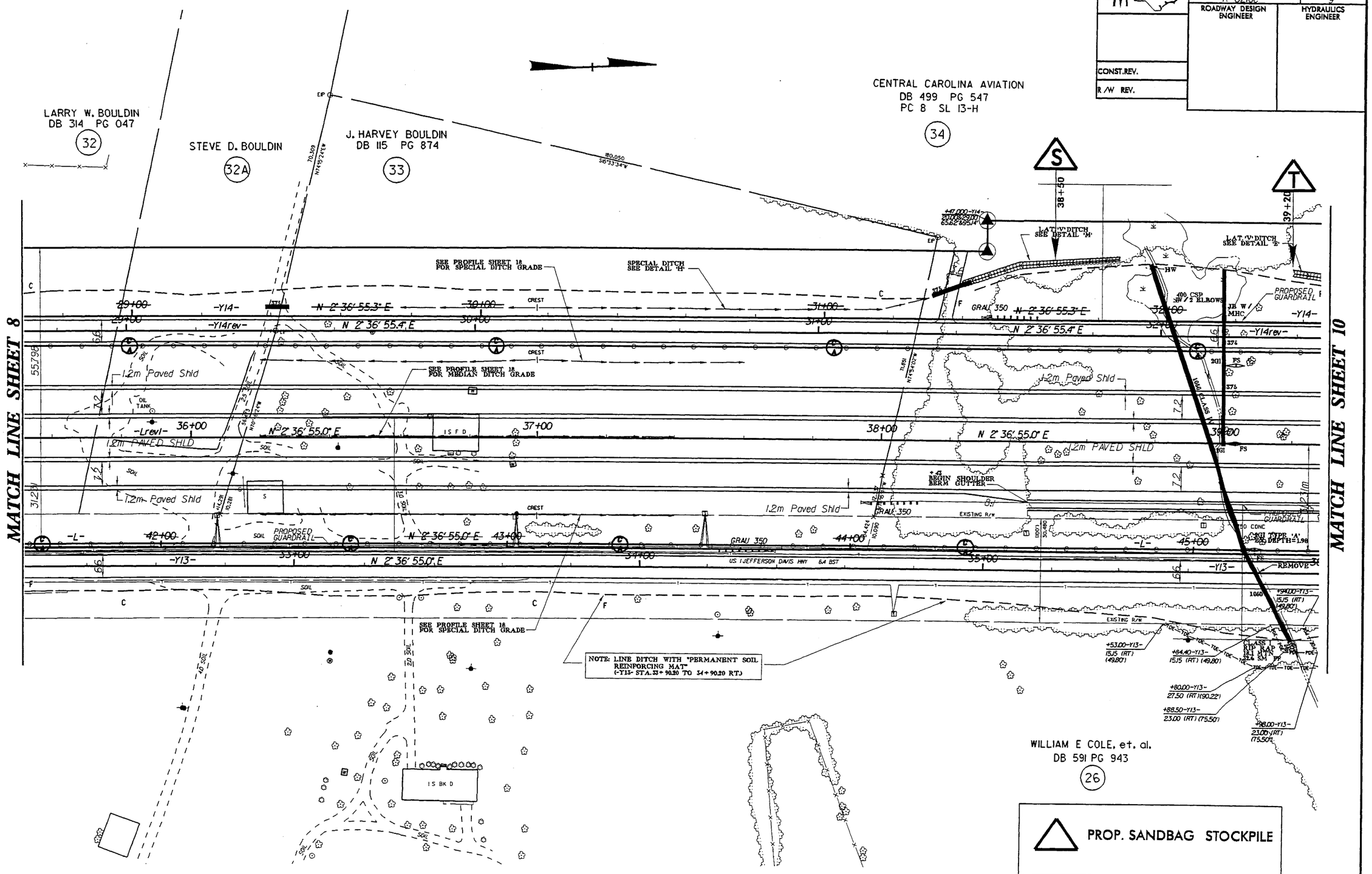

REVISIONS

05-DEC-2006 13:30
r:\roadway\proj\r-2110wm_rdy_psh21.dgn
$$$$USERNAME$$$$

PROJECT REFERENCE NO.	SHEET NO.
R-0210WM	25
R-0210C	12
ROADWAY DESIGN ENGINEER	HYDRAULICS ENGINEER

CONST.REV.

R/W REV.

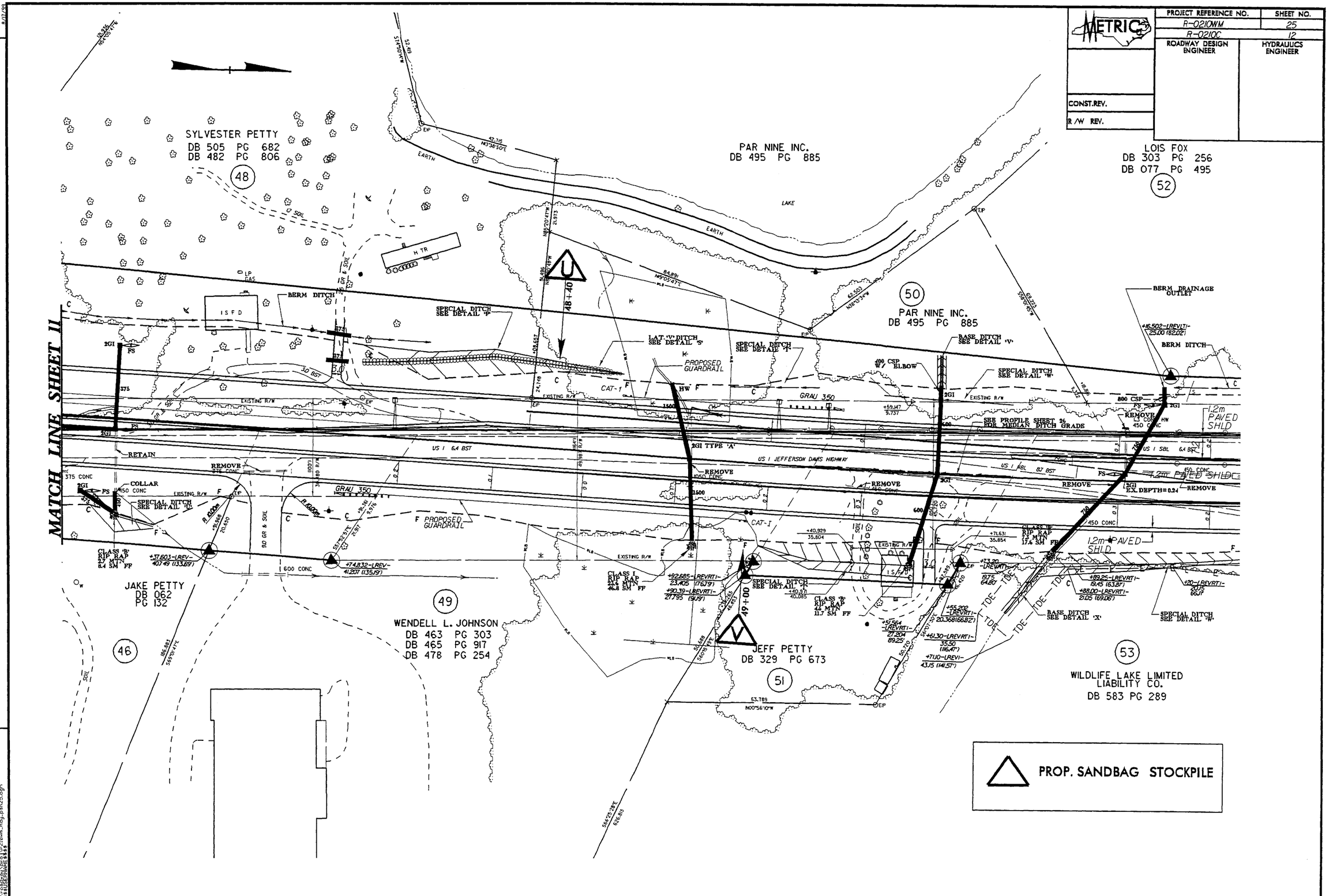

REVISIONS

05-DEC-2006 13:30
r:\roadway\proj\r-210wm_Rdy_psh25.dgn
$$$$USERNAME$$$$

PROJECT REFERENCE NO.	SHEET NO.
R-0210 WM	26
R/W SHEET NO.	
ROADWAY DESIGN ENGINEER	HYDRAULICS ENGINEER

-DETAIL #1A-
STA. 60+50 Lt. (R-0210 A)

Top View

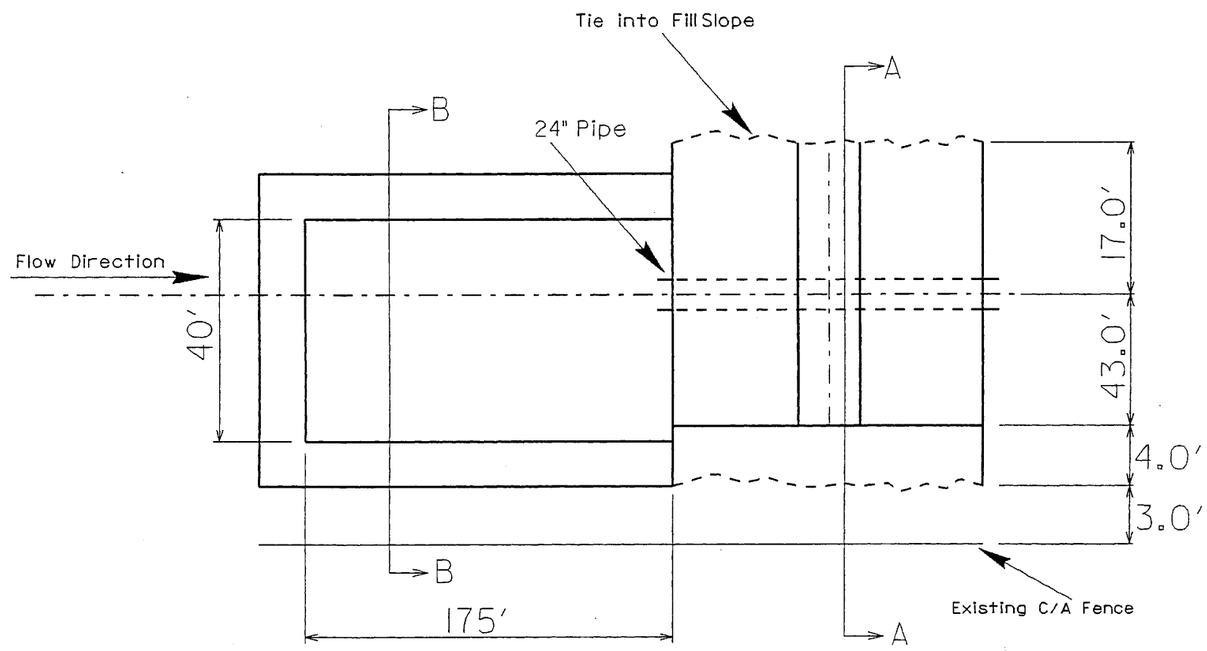

Section A-A

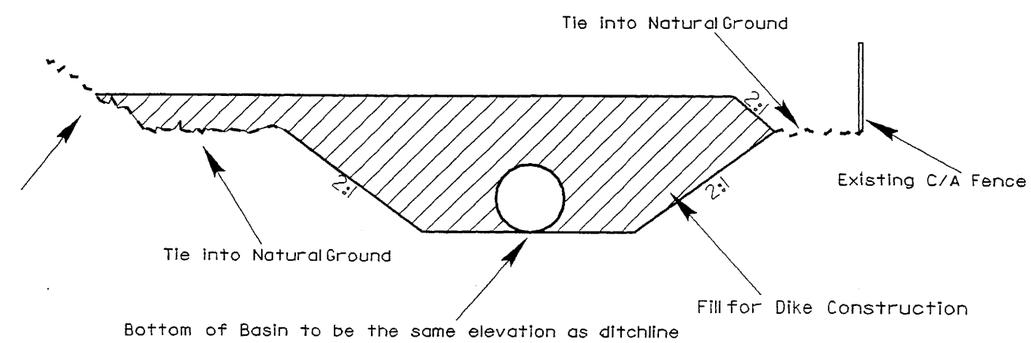

Section B-B

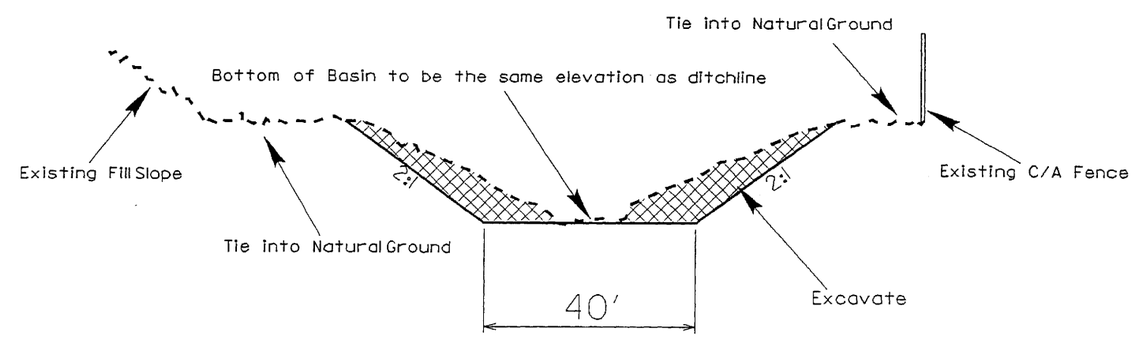

Profile View

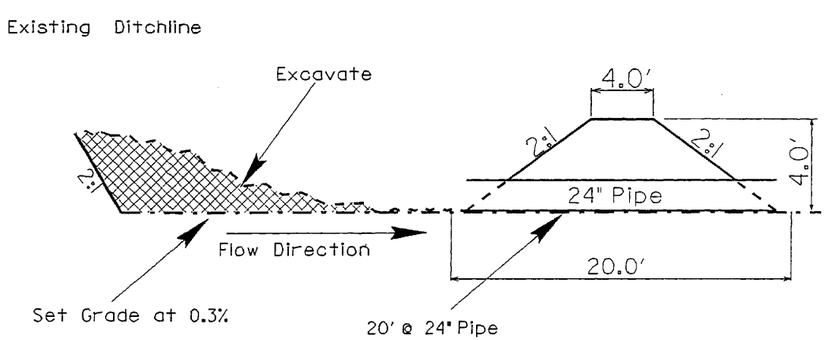

Notes

1. Not To Scale

5/14/99

5-DEC-2006 07:58

PROJECT REFERENCE NO.	SHEET NO.
R-0210 WM	27
R/W SHEET NO.	
ROADWAY DESIGN ENGINEER	HYDRAULICS ENGINEER

-DETAIL IB-
STA. 60+50 Lt. (R-0210 A)

Top View

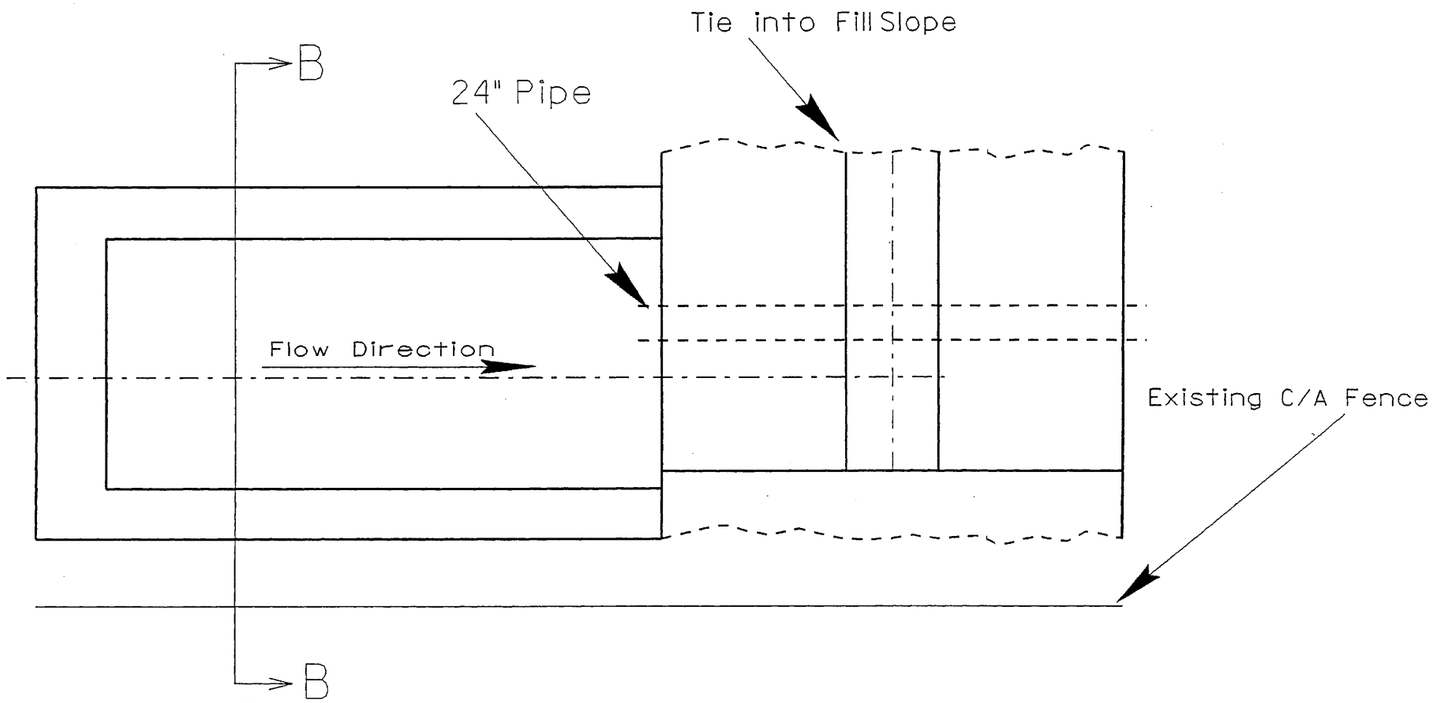

Section B-B

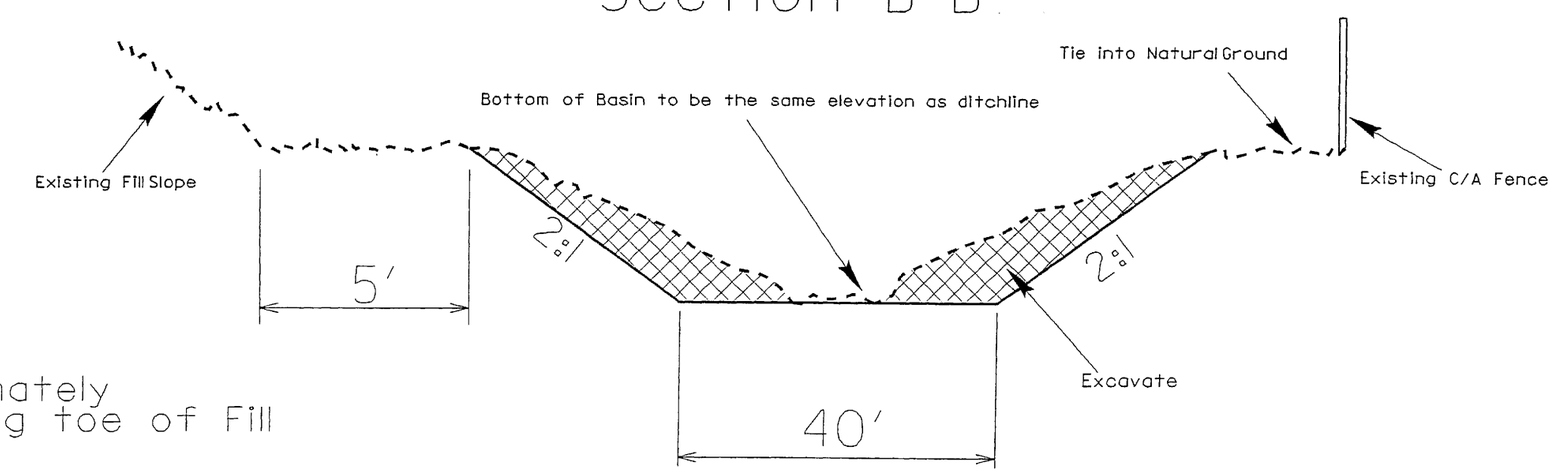

Notes

1. Not To Scale
2. Begin Excavation approximately 5' from base of existing toe of Fill

5/14/99

05-DEC-2006 07:59
ance\moore\us\ypsi6050\r-0210_hyd_sur_2d.dgn

PROJECT REFERENCE NO.	SHEET NO.
R-0210 WM	28
R/W SHEET NO.	
ROADWAY DESIGN ENGINEER	HYDRAULICS ENGINEER

-DETAIL #2-
STA. 75+80 LT. (R-0210A)

Top View

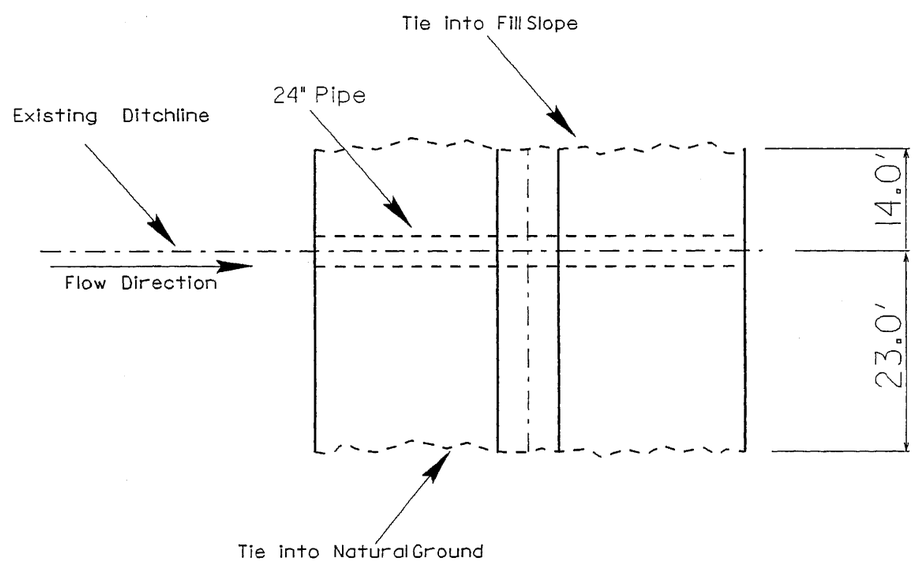

Front View

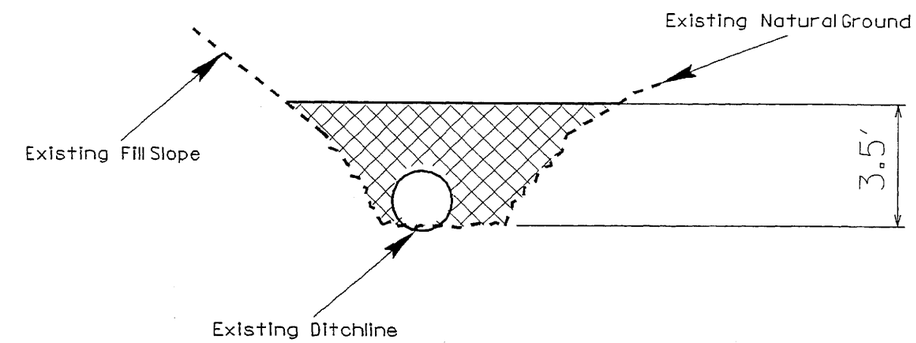

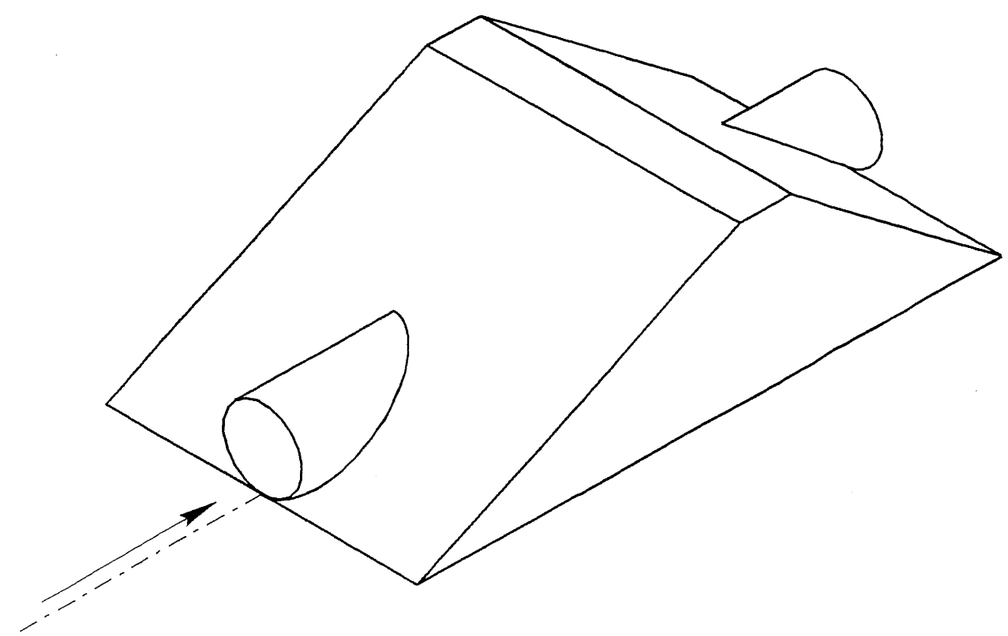

Profile View

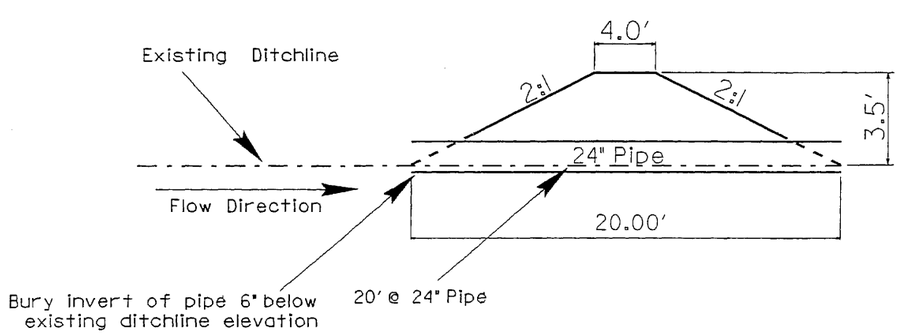

Notes

1. Install Dike 82' South of 15" RCP at Sta. 76+05
2. Not To Scale
3. Existing Ditchline is located 72' from EOP of US-1

5/14/99
05-DEC-2006 08:03
enance\mpace\usi\usivass\usivass_hyd_sur_2d.dgn
arpless AT HY221554

PROJECT REFERENCE NO.	SHEET NO.
R-0210 WM	29
R/W SHEET NO.	
ROADWAY DESIGN ENGINEER	HYDRAULICS ENGINEER

-Detail #3-
STA. 77+00 LT. (R-0210A)

Top View

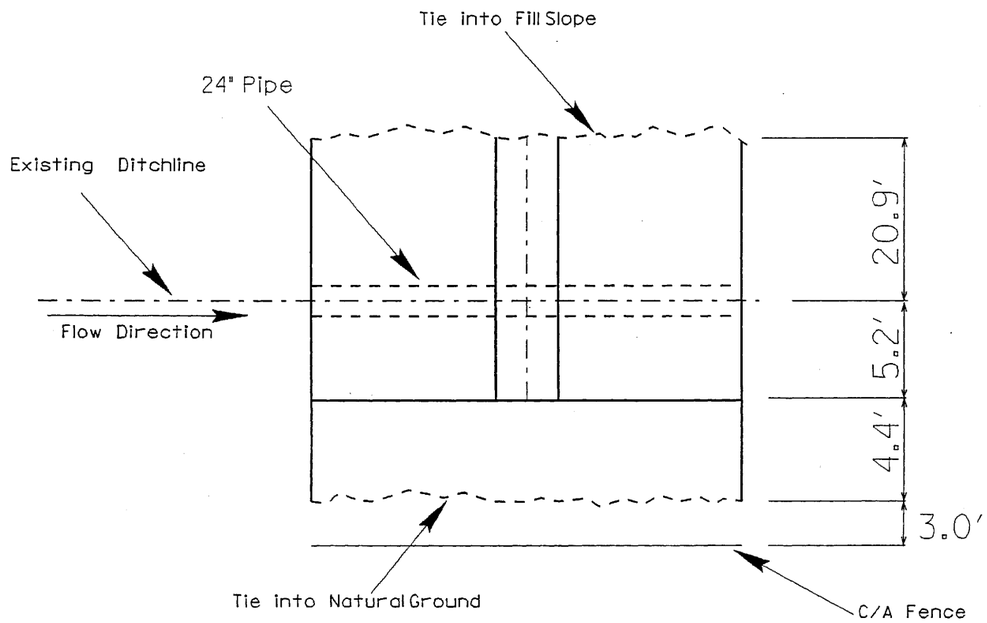

Front View

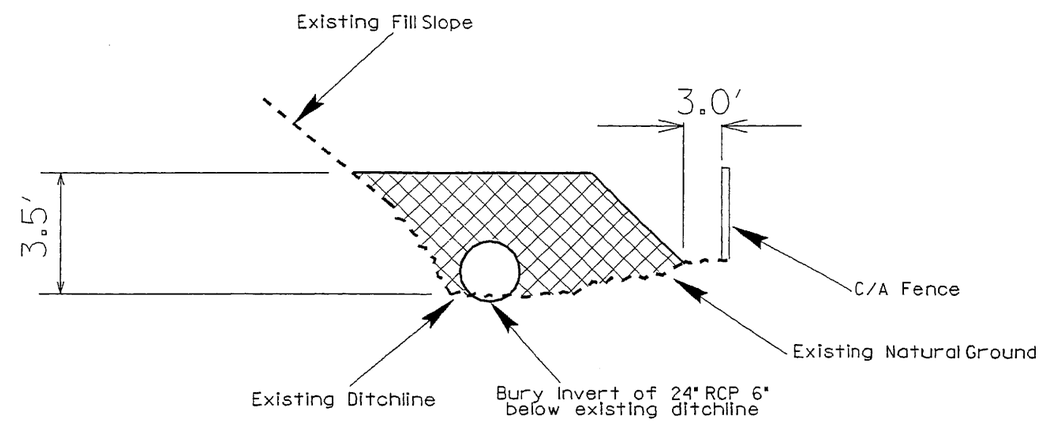

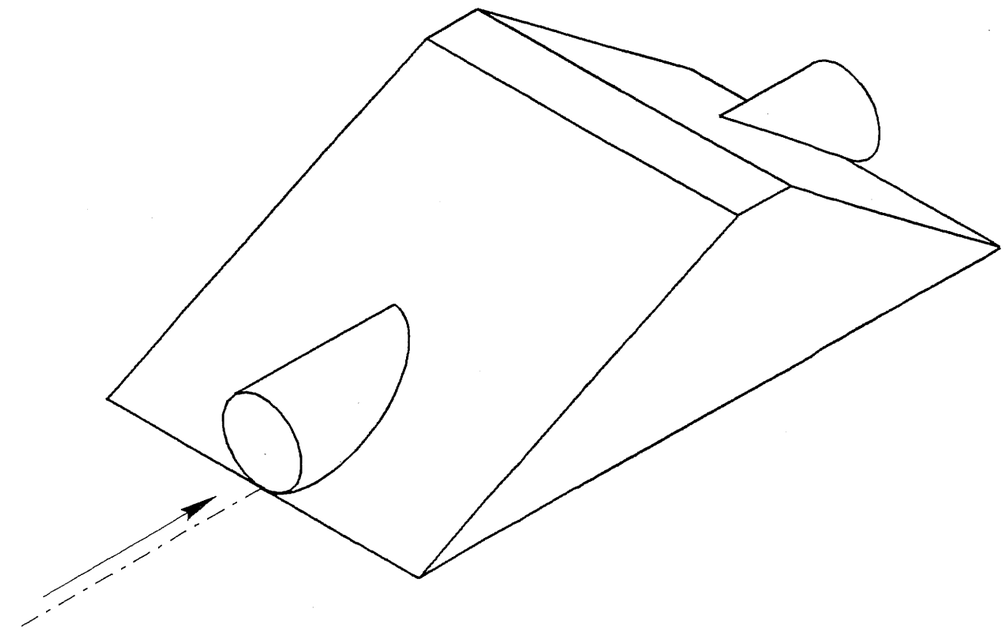

Profile View

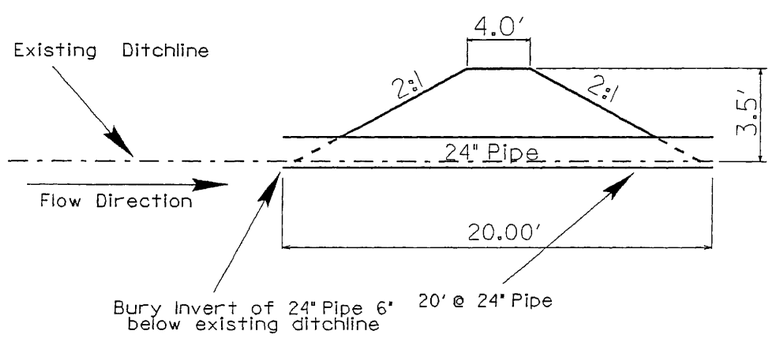

Notes

1. Install Dike 50' South of 24" RCP at Sta. 77+16
2. Not To Scale
3. Existing Ditchline is located 84' from EOP of US-1

5/14/99
05-DEC-2006 08:08
r-0210a_hyd_sur_7900_2d.dgn

PROJECT REFERENCE NO.	SHEET NO.
R-0210 WM	30
R/W SHEET NO.	
ROADWAY DESIGN ENGINEER	HYDRAULICS ENGINEER

-Detail #4-
STA. 77+20 LT. (R-0210A)

Top View

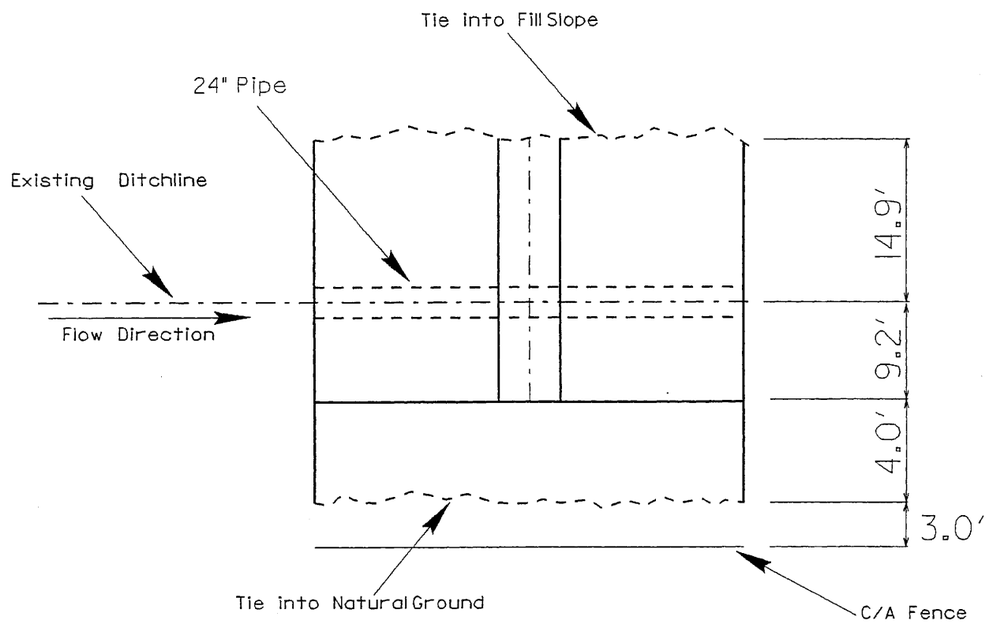

Front View

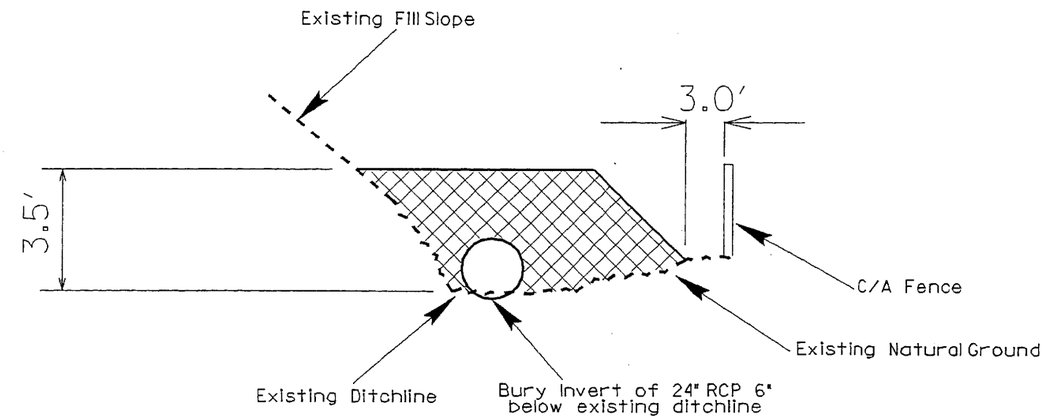

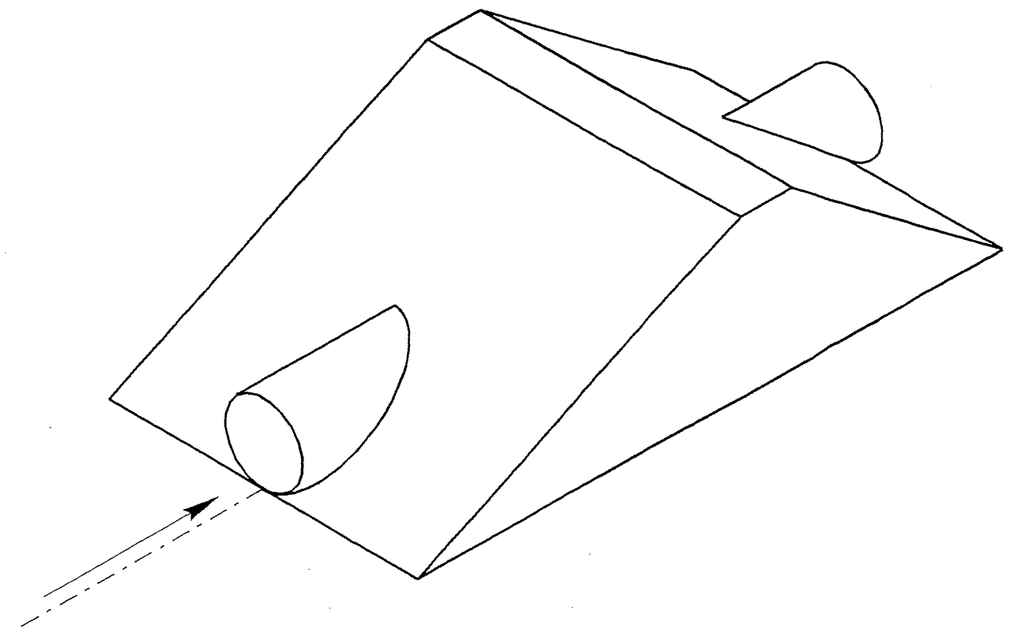

Profile View

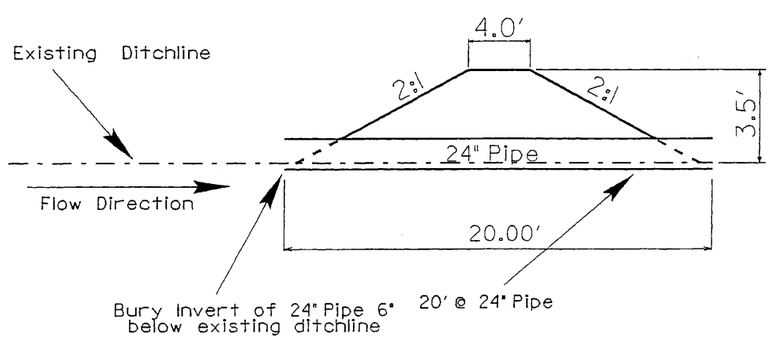

Notes

1. Install Dike 15' North of 24" RCP at Sta. 77+16
2. Not To Scale
3. Existing Ditchline is located 80' from EOP of US-1

5/14/99
05-DEC-2006 08:12
r-0210a_hyd_sur_7900_2d.dgn

PROJECT REFERENCE NO.	SHEET NO.
R-0210 WM	31
R/W SHEET NO.	
ROADWAY DESIGN ENGINEER	HYDRAULICS ENGINEER

-DETAIL #5-
STA. 75+00 RT. (R-210A)

Top View

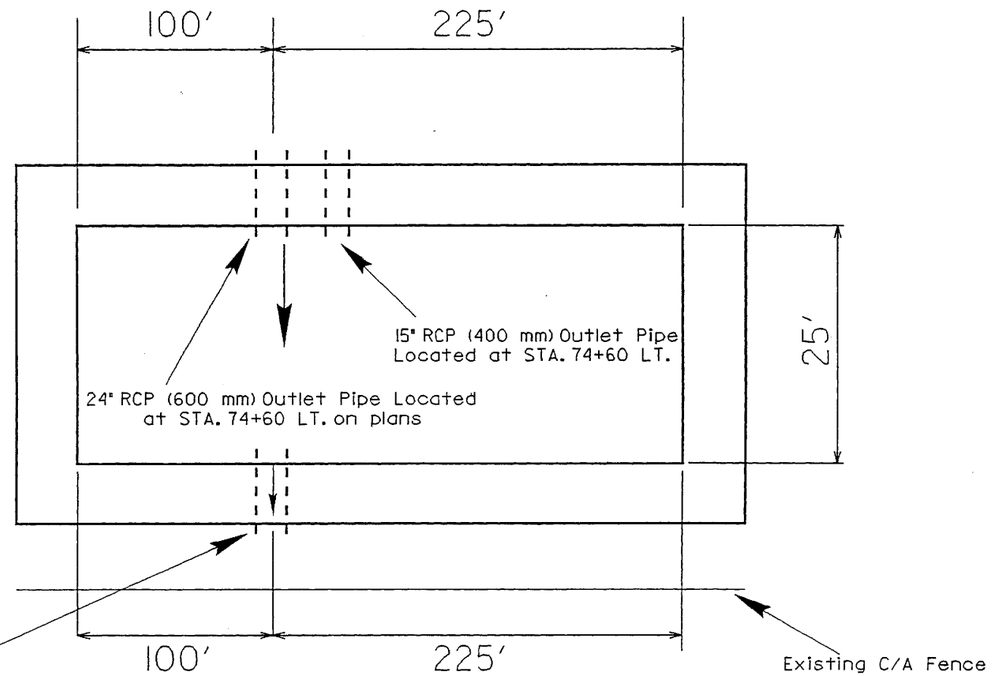

Isometric View

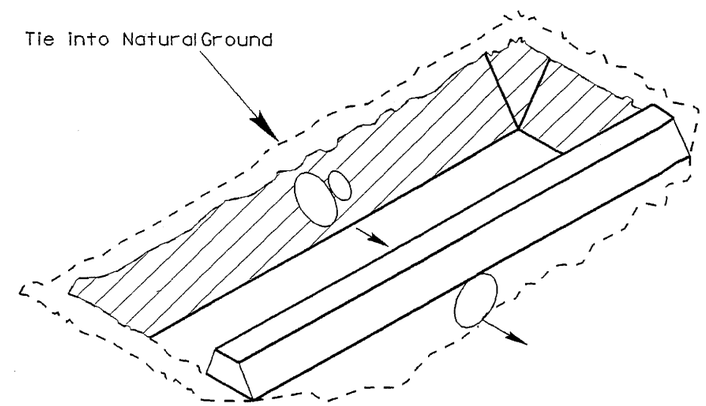

Cross-Section View

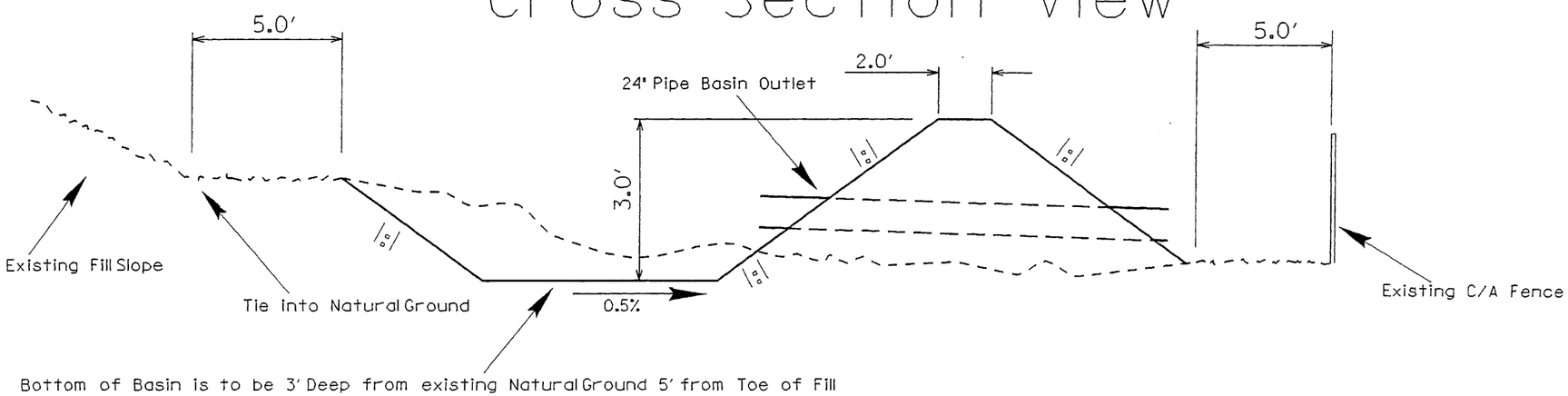

Notes

1. Not To Scale

5/14/99

05-DEC-2006 08:20
nence\moore\usl\uslvass\uslvass_hyd_sur_2d.dgn
rpless AT HY221554

PROJECT REFERENCE NO.	SHEET NO.
R-0210 WM	32
R/W SHEET NO.	
ROADWAY DESIGN ENGINEER	HYDRAULICS ENGINEER

-Detail #6-
STA. 79+00 LT. (R-0210A)

Top View

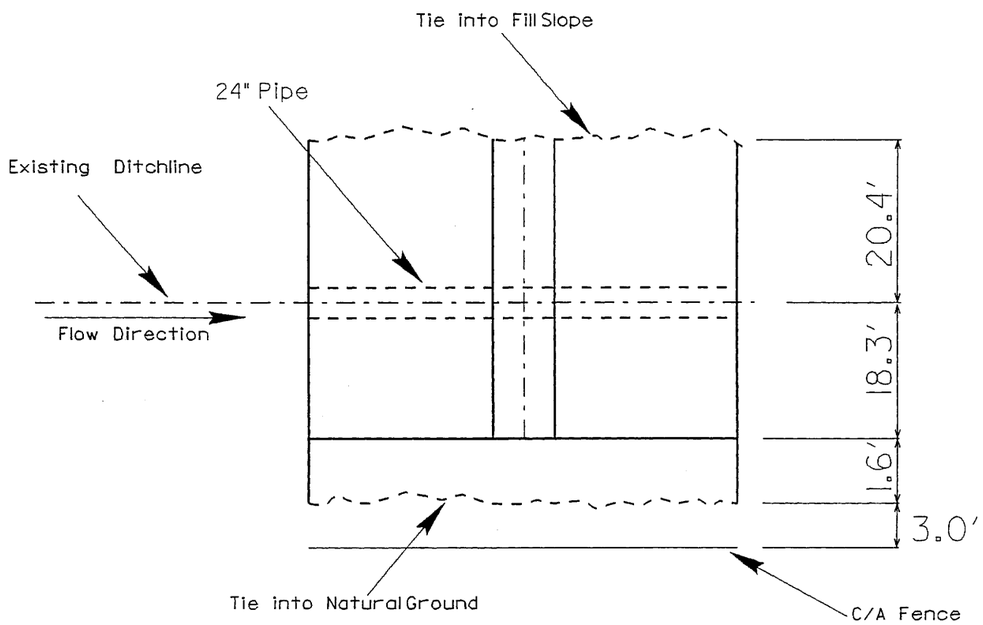

Front View

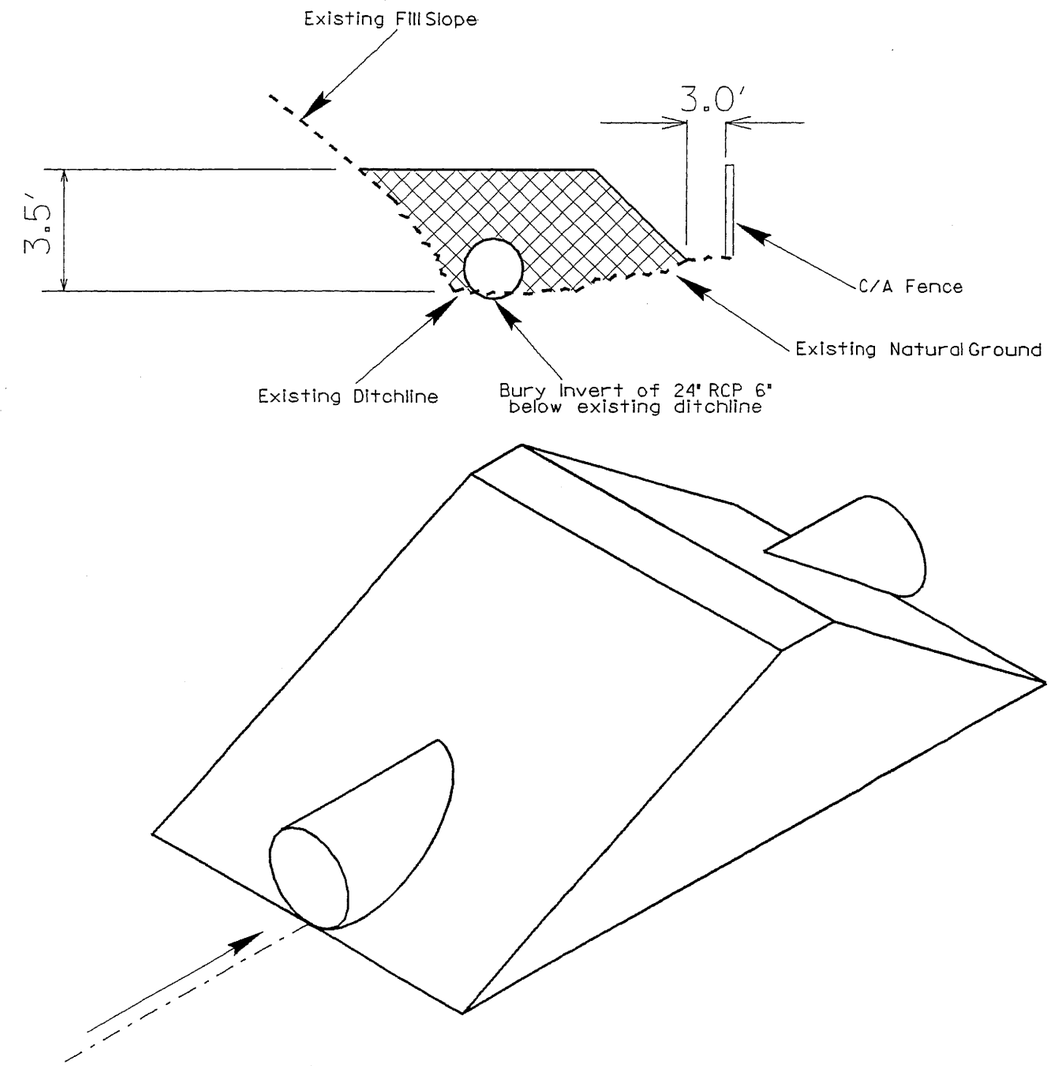

Profile View

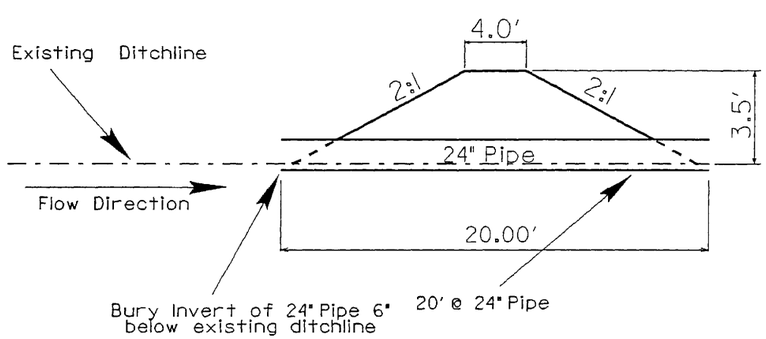

Notes

1. Install Dike 25' South of 72" RCP at Sta. 79+20
2. Not To Scale
3. Existing Ditchline is located 75' from EOP of US-1

5/14/9c

05-DEC-2006 08:24
ance\moore\us\o\900\r-0210a_hyd_sur_7900_2d.dgn

PROJECT REFERENCE NO.	SHEET NO.
R-0210 WM	33
R/W SHEET NO.	
ROADWAY DESIGN ENGINEER	HYDRAULICS ENGINEER

-DETAIL #7-
STA. 81+80 RT. (R-0210A)

Top View

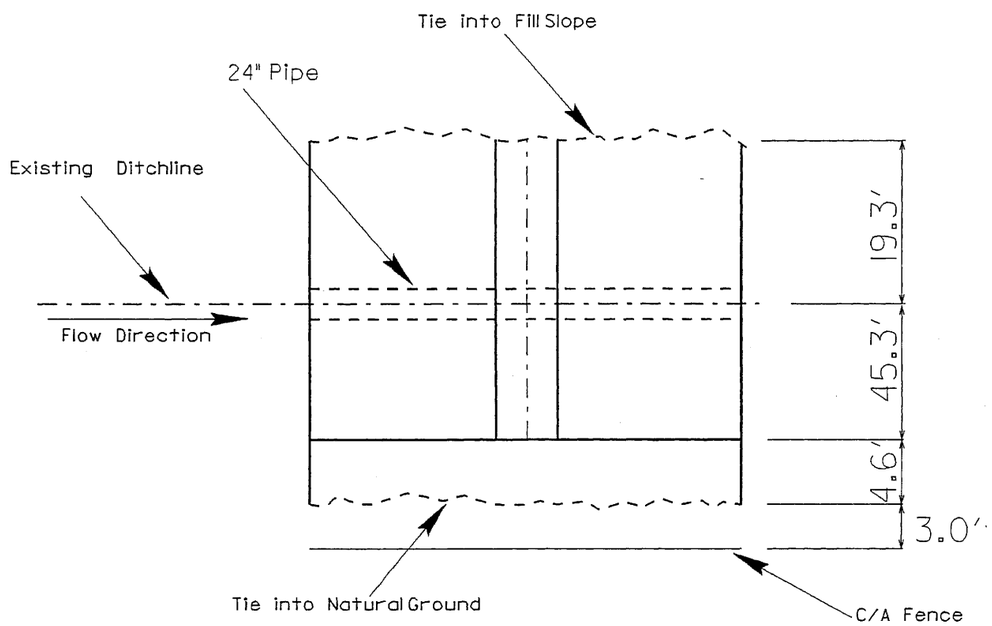

Front View

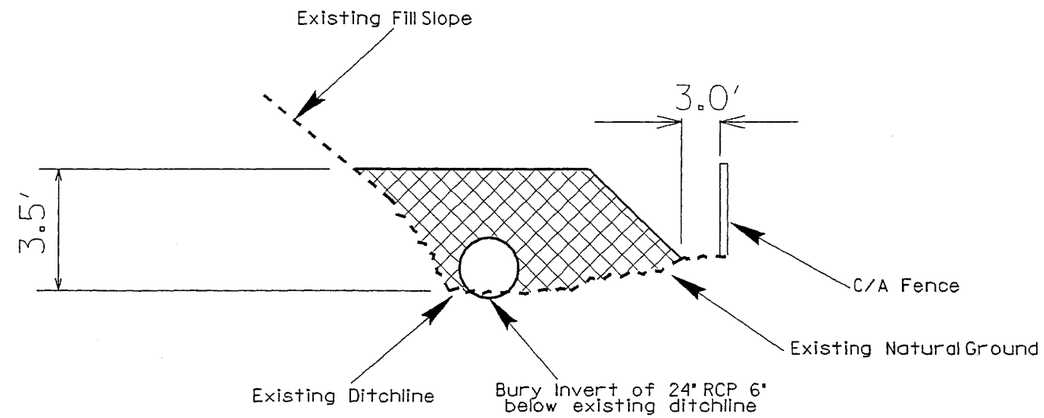

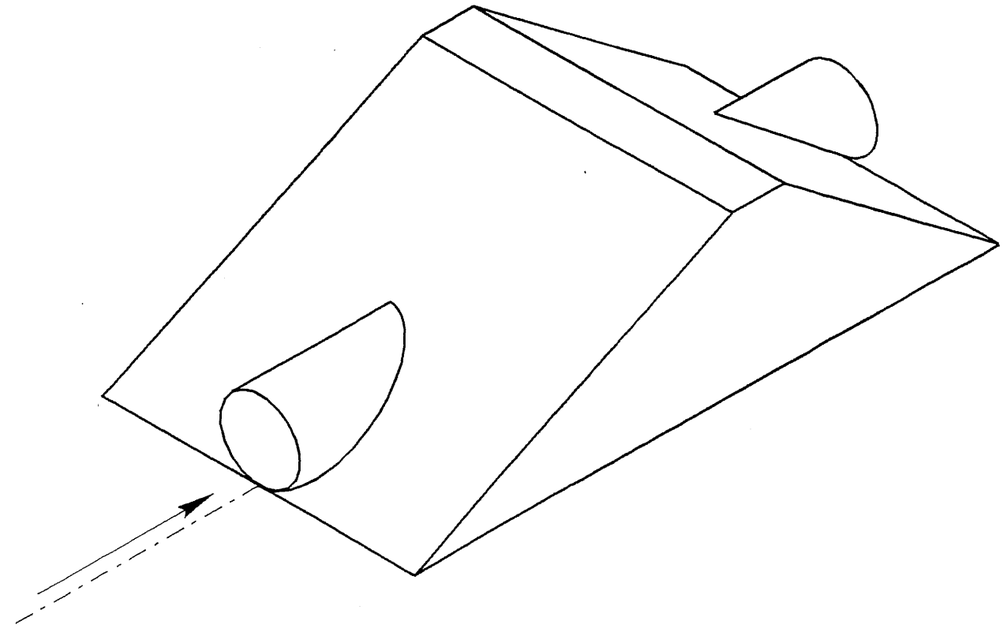

Profile View

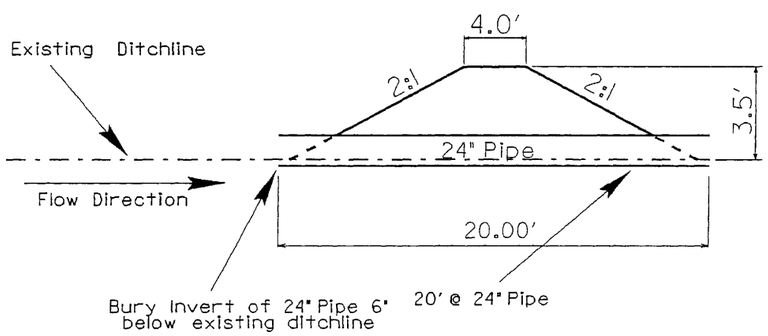

Notes

1. Install Dike 25' South of 72" RCP at Sta. 79+20
2. Not To Scale
3. Existing Ditchline is located 52' from EOP of US-1

5/14/99
05-DEC-2006 08:27
\usl\vass\usl\vass_hyd_sur_2d.dgn
AT HY221554

PROJECT REFERENCE NO.	SHEET NO.
R-0210 WM	34
R/W SHEET NO.	
ROADWAY DESIGN ENGINEER	HYDRAULICS ENGINEER

-Detail #8-
STA. 86+30 RT. (R-0210A)

Top View

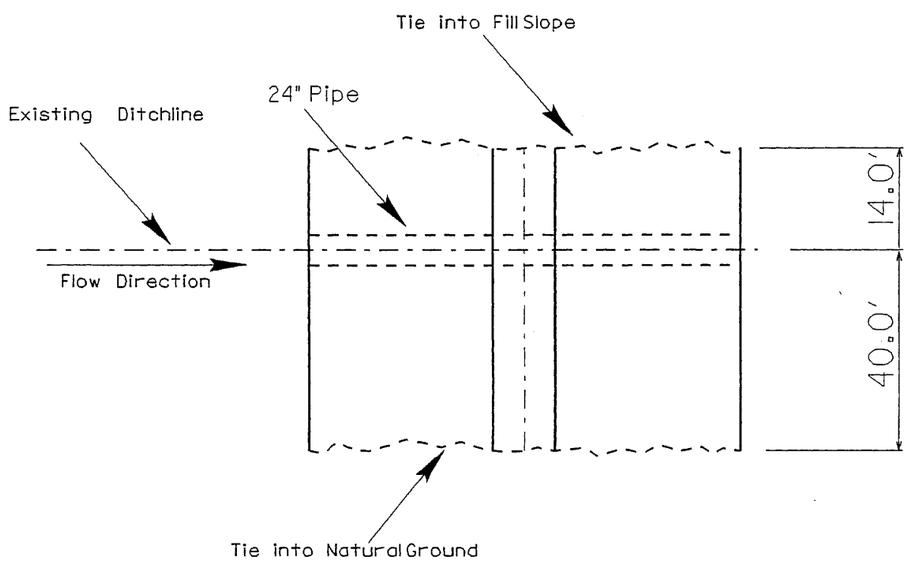

Front View

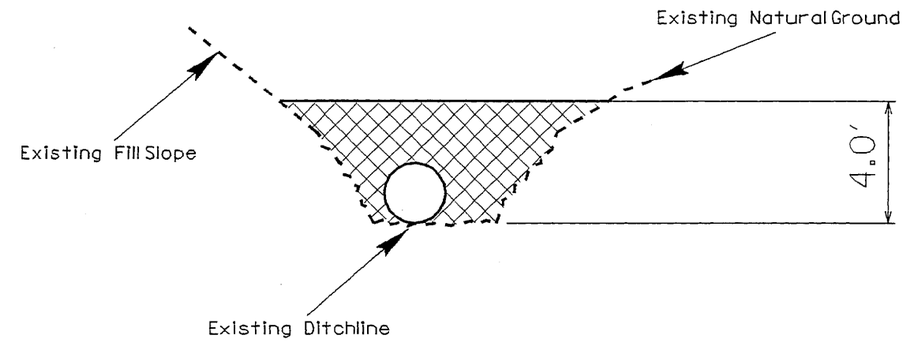

Profile View

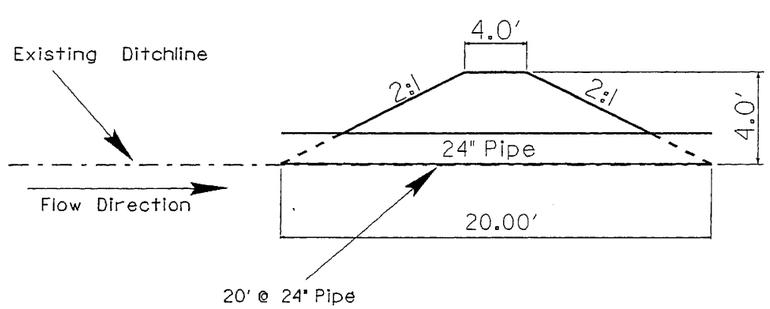

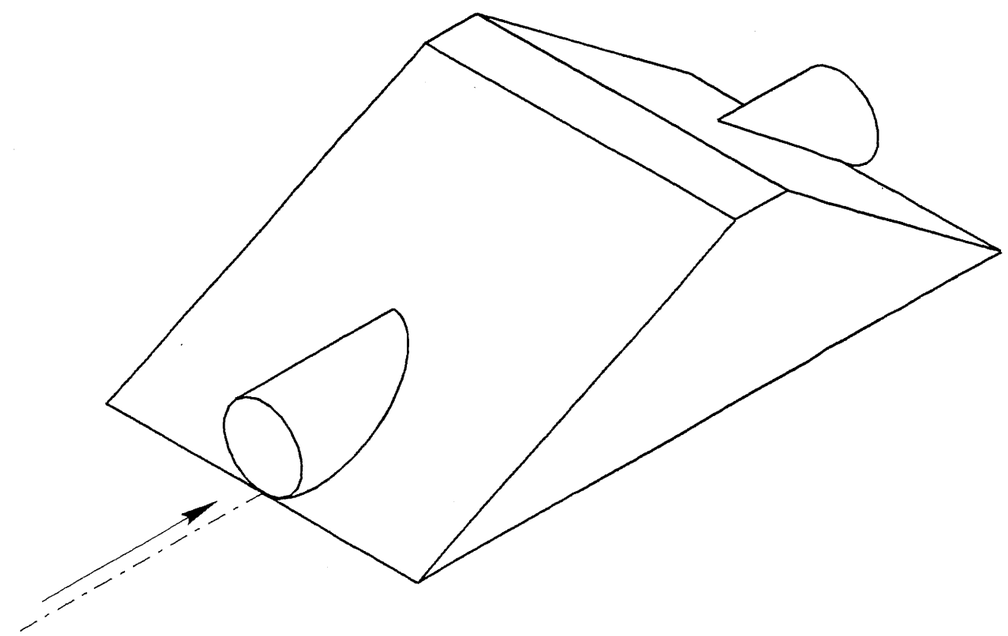

Notes

1. Install Dike 120' South of 15" RCP at Sta. 86+60
2. Not To Scale
3. Existing Ditchline is located 48.5' from EOP of US-1

5/14/98
05-DEC-2006 08:31
r-0210_hyd_sur_2d.dgn

PROJECT REFERENCE NO.	SHEET NO.
R-0210 WM	35
R/W SHEET NO.	
ROADWAY DESIGN ENGINEER	HYDRAULICS ENGINEER

-Detail #9-
STA. 140+80 Rt. (R-0210 B)

Top View

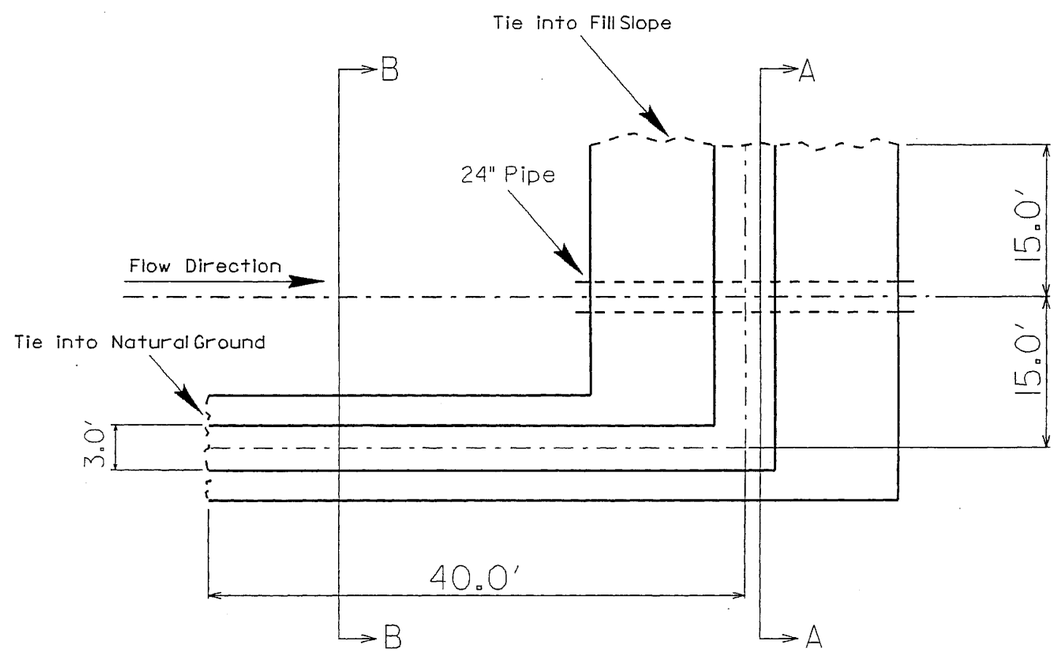

Section A-A

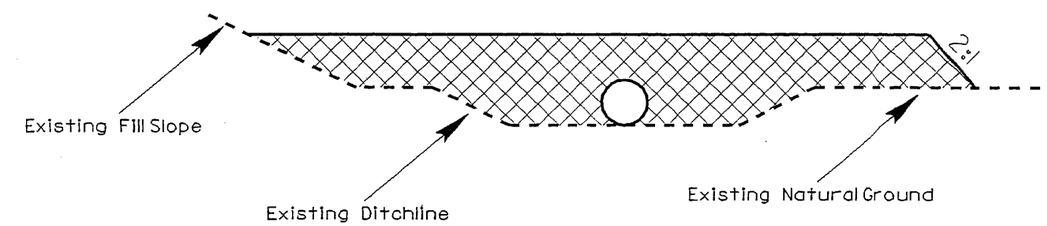

Section B-B

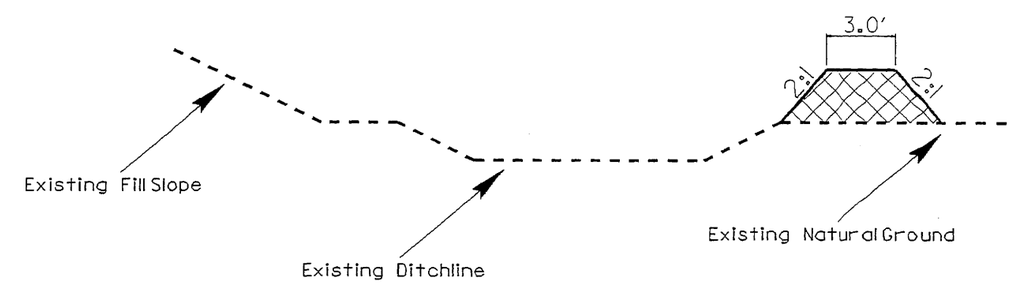

Profile View

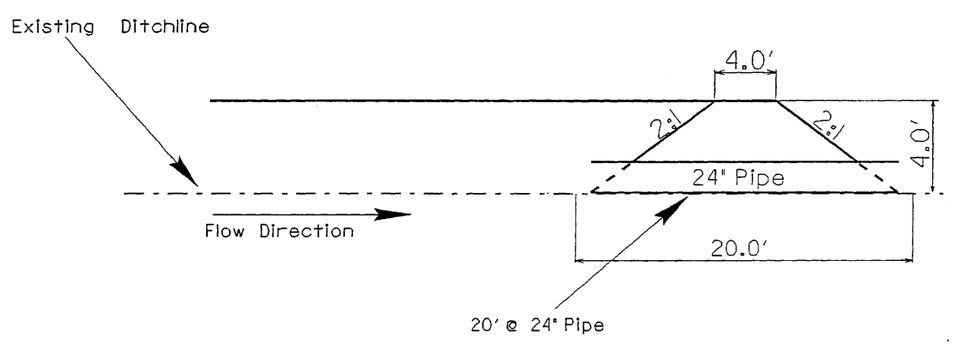

Notes

1. Install 65' South of 42" RCP at Sta. 141+05
2. Not To Scale
3. Remove Class B stone for pipe installation
4. Existing Ditchline is located 50.0' Rt. of US-1 EOP

5/14/99

05-DEC-2006 08:37
nance\moore\usl\bi4080\r210b_hyd_sur_r210_2d.dgn

PROJECT REFERENCE NO.	SHEET NO.
R-0210 WM	36
R/W SHEET NO.	
ROADWAY DESIGN ENGINEER	HYDRAULICS ENGINEER

-Detail #10-
STA. 20+80 LT. (R-0210C)

Top View

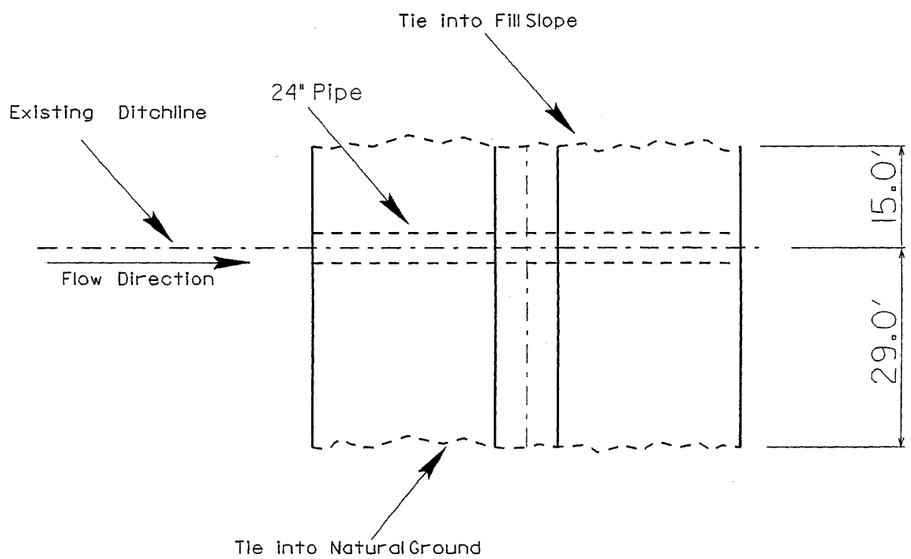

Front View

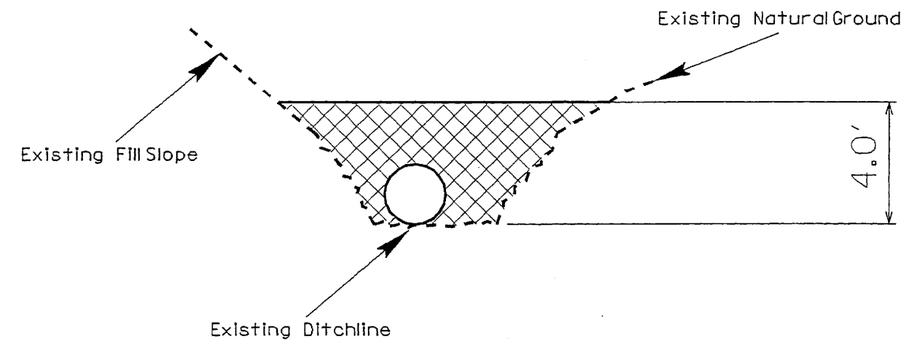

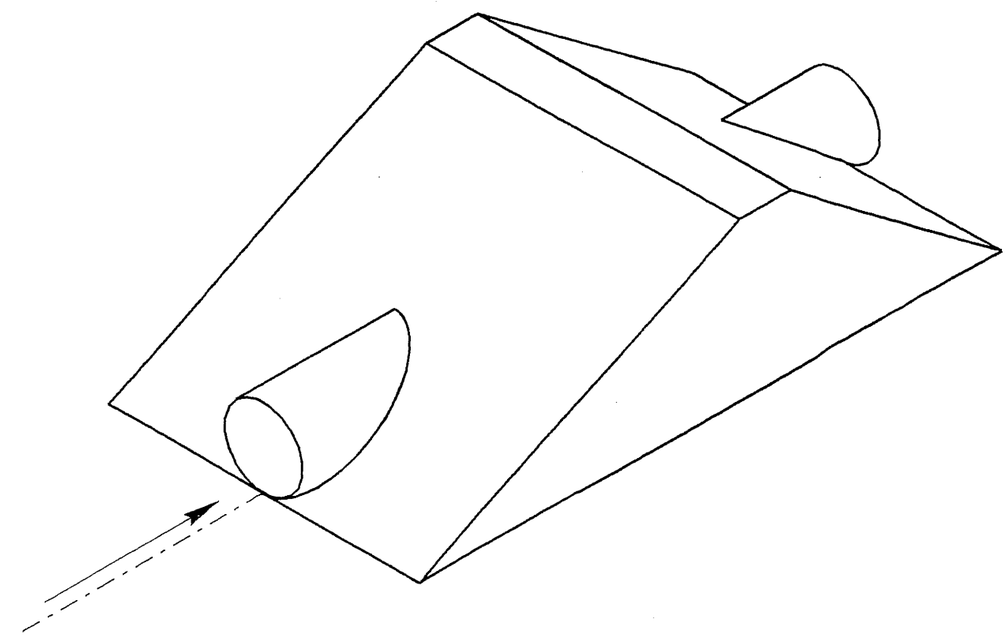

Profile View

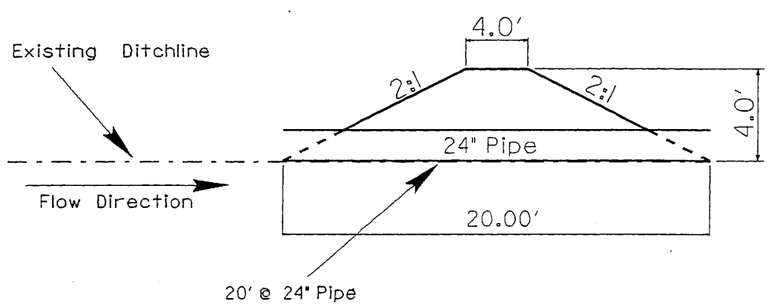

Notes

1. Install Dike 40' South of 30" RCP at Sta. 21+90
2. Not To Scale
3. Existing Ditchline is located 38' from EOP of US-1

5/14/99

05-DEC-2006 08:43

PROJECT REFERENCE NO.	SHEET NO.
R-0210 WM	37
R/W SHEET NO.	
ROADWAY DESIGN ENGINEER	HYDRAULICS ENGINEER

-Detail #11-
STA. 31+60 Rt. (R-0210 C)

Top View

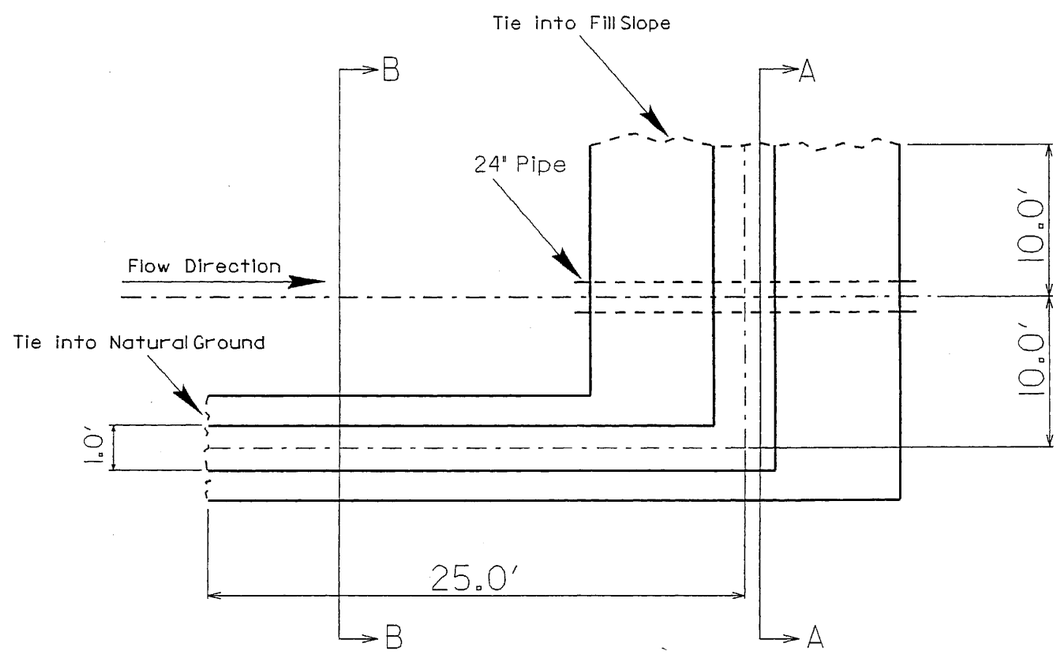

Section A-A

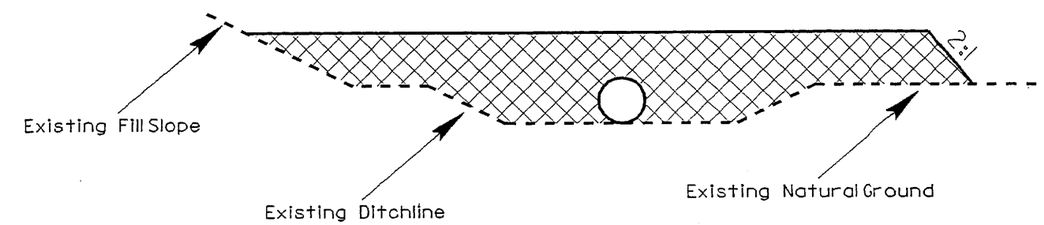

Section B-B

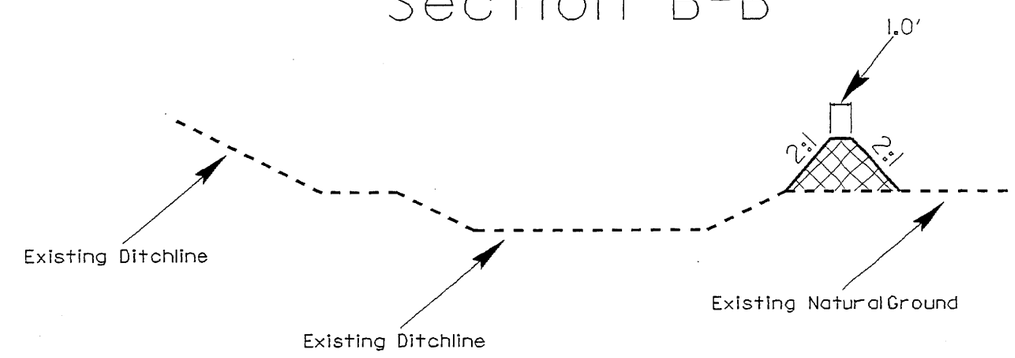

Profile View

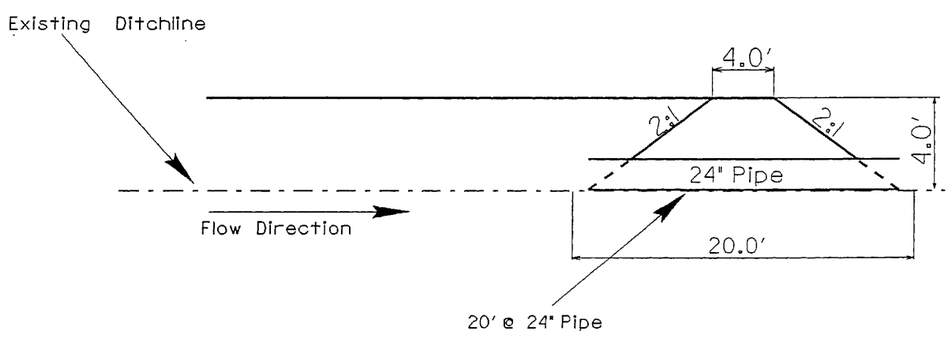

Notes

1. Install Dike 25' South of 42" RCP outlet at Sta. 31+80
2. Not To Scale
3. Existing Dicthline is located 30' from Service Rd. EOP

05-DEC-2006 08:47
\\nce\moore\usl\c3160\r-0210c_hyd_sur_3160_2d.dgn
ersless AT HY221554

PROJECT REFERENCE NO.	SHEET NO.
R-0210 WM	38
R/W SHEET NO.	
ROADWAY DESIGN ENGINEER	HYDRAULICS ENGINEER

-Detail #12-
STA. 31+80 RT. (R-0210 C)

Top View

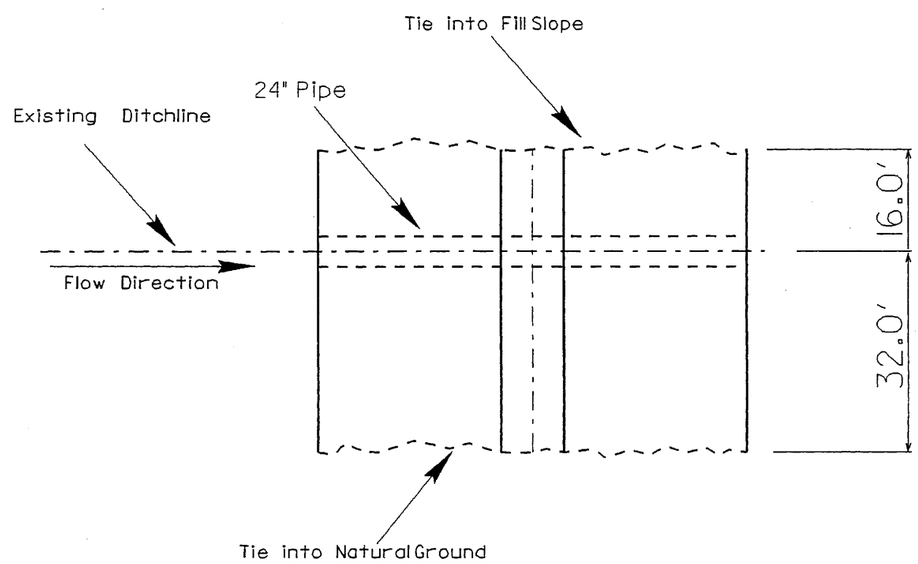

Front View

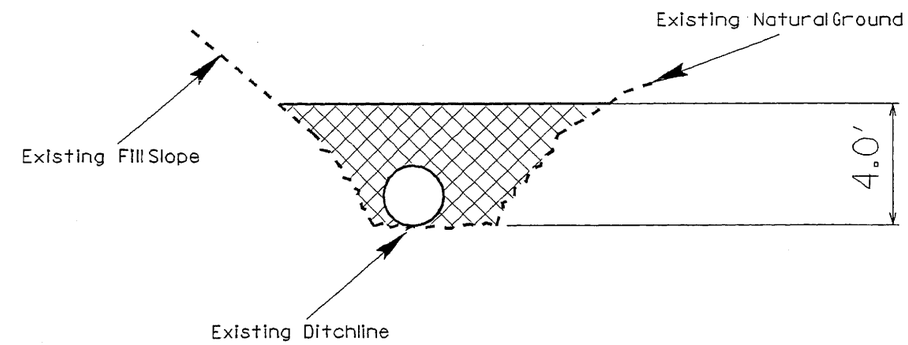

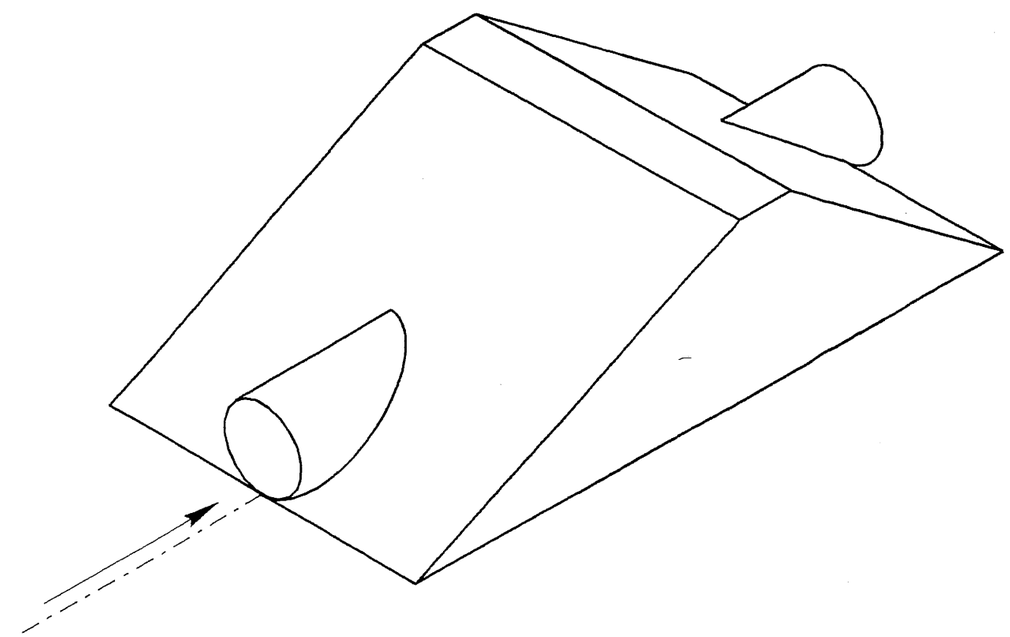

Profile View

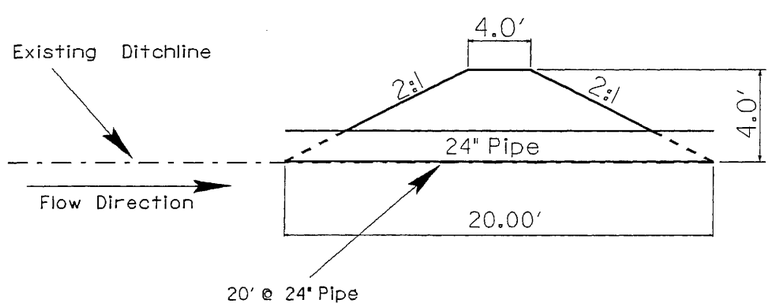

Notes

1. Install Dike 60' North of 42" RCP at Sta. 31+60
2. Not To Scale
3. Existing Ditchline is loacated 48' from Service Road EOP

5/14/99

05-DEC-2006 08:53
nance\moore\us1\3180\2dr210c3180lt_hyd_sur2d.dgn