Revised 3/2/2018

TIP PROJECT: R-2633D

CONTRACT: C204080

STATE	STATE PROJECT REFERENCE NO.	SHEET NO.
N.C.	R-2633D	ITS-1

STATE PROJ. NO.	F. A. PROJ. NO.	DESCRIPTION
34491.1.12	NHP-0040(058)	PE
34491.3.23	NHP-0040(058)	CONST.

STATE OF NORTH CAROLINA
DIVISION OF HIGHWAYS

BRUNSWICK COUNTY
NEW HANOVER COUNTY

LOCATION: I-140 FROM US 17 BUS. TO I-40 NORTH, TO DIVISION 3 TRAFFIC OPERATIONS CENTER (TOC), SR 2662 BARBADOS BLVD. IN CASTLE HAYNE

TYPE OF WORK: COMMUNICATIONS CABLE AND CONDUIT ROUTING

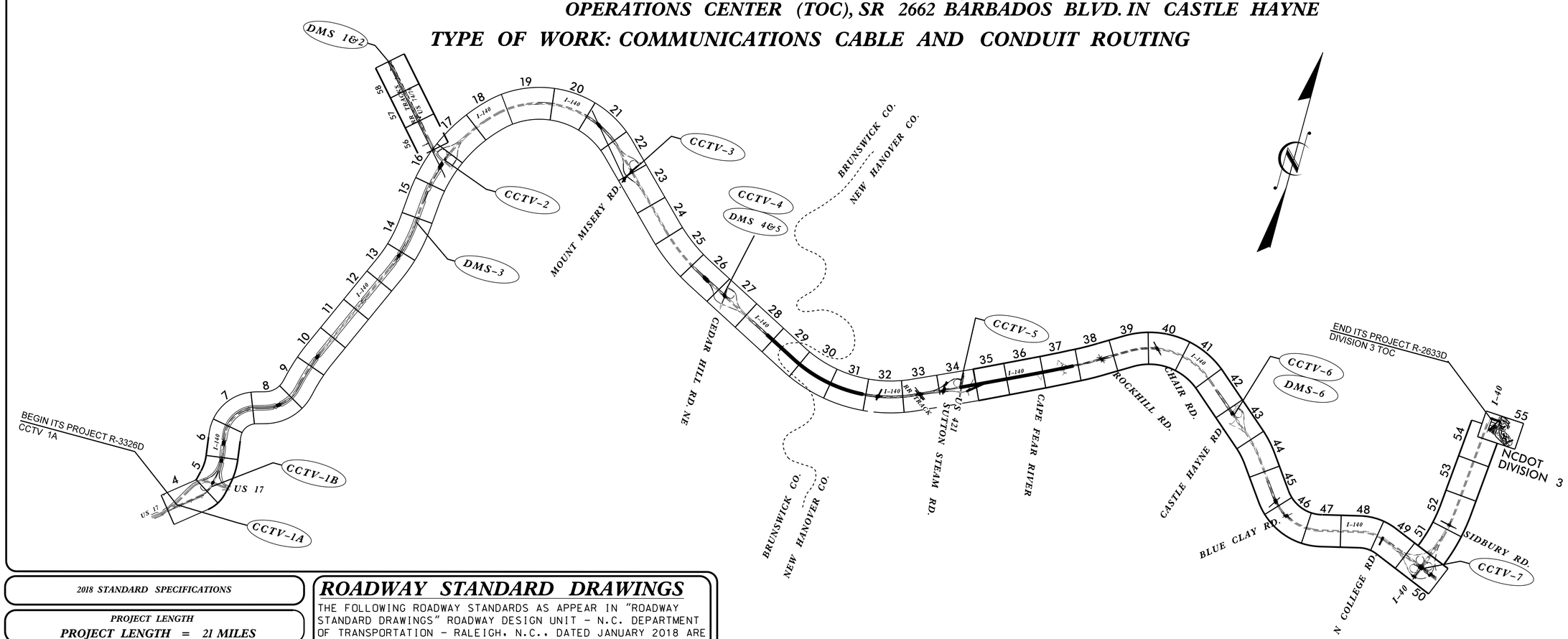

2018 STANDARD SPECIFICATION

2018 STANDARD SPECIFICATIONS

PROJECT LENGTH
PROJECT LENGTH = 21 MILES

LETTING DATE:
APRIL 17, 2018

INDEX OF SHEETS

ROADWAY STANDARD DRAWINGS

THE FOLLOWING ROADWAY STANDARDS AS APPEAR IN "ROADWAY STANDARD DRAWINGS" ROADWAY DESIGN UNIT - N.C. DEPARTMENT OF TRANSPORTATION - RALEIGH, N.C., DATED JANUARY 2018 ARE APPLICABLE TO THIS PROJECT AND BY REFERENCE HEREBY ARE CONSIDERED A PART OF THESE PLANS:

STD. NO.	TITLE
1710.01	MESSENGER CABLE
1715.01	UNDERGROUND CONDUIT-TRENCHING
1716.01	JUNCTION BOXES
1720.01	WOOD POLES
1721.01	GUY ASSEMBLIES
1722.01	RISER ASSEMBLY
1730.01	FIBER OPTIC CABLE

NCDOT CONTACT:
TRANSPORTATION MOBILITY AND SAFETY

P.P. MARAK, PE
ITS DEVELOPMENT &
DESIGN ENGINEER

Prepared in the Offices of:
Transportation Mobility and Safety Division
STATE OF NORTH CAROLINA DEPARTMENT OF TRANSPORTATION
Intelligent Transportation Systems Section
750 N. Greenfield Pkwy., Garner, NC 27529

ENGLISH

ALL DIMENSIONS IN THESE PLANS ARE IN FEET UNLESS OTHERWISE NOTED

SEAL
NORTH CAROLINA PROFESSIONAL SEAL 031636 ENGINEER PAUL P. MARAK

DocuSigned by:
Paul P. Marak
C49FA370BC5A4C1...
SIGNATURE
2/7/2018
DATE

February 16, 2018

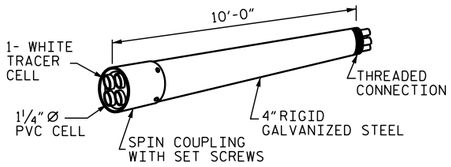

RIGID GALVANIZED (RGC)
MULTI-CELL RACEWAY

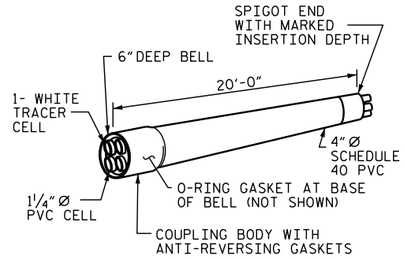

SCHEDULE 40 PVC
MULTI-CELL RACEWAY

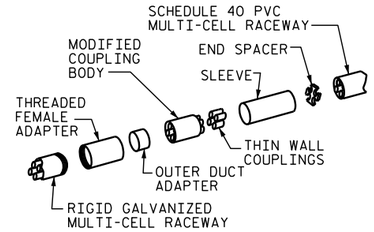

TRANSITION ADAPTER

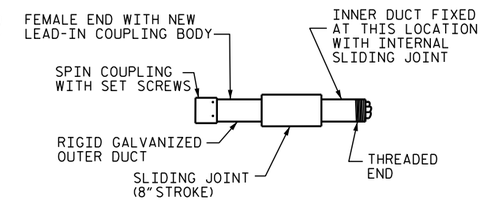

EXPANSION JOINT FITTING

DETAIL "D"
4" MULTI-CELL COMPONENTS

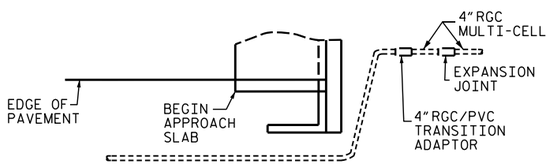

DETAIL "A"
TERMINATION OF CONDUIT AT WING WALL

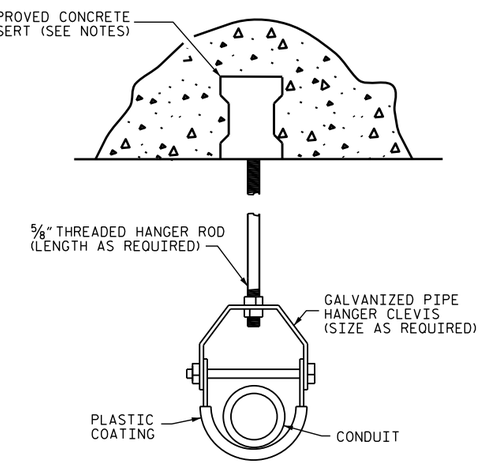

DETAIL "C"
HANGER ASSEMBLY

NOTES

THE CONTRACTOR SHALL BE RESPONSIBLE FOR DETERMINING THE TOTAL QUANTITY OF CONDUIT NEEDED TO COMPLETE THE WORK AND THAT THE CONDUIT(S) ARE PLACED AT THE NOTED DIMENSION AND ABOVE THE BOTTOM OF THE GIRDER.

BRIDGE CONDUIT SYSTEM SHALL BE MEASURED AND PAID AS LINEAR FEET. THE PRICE SHALL INCLUDE ALL CONDUIT, HANGERS, STABILIZERS, EXPANSION JOINTS, CONCRETE INSERTS, PVC SLEEVES AND ALL NECESSARY HARDWARE TO COMPLETE THE WORK.

THE CONTRACTOR SHALL FIELD VERIFY THAT THE CONDUIT SYSTEM IS NOT IN CONFLICT WITH THE GUARDRAIL POSTS.

SEE DETAIL "C" FOR HANGER ASSEMBLY INSTALLATION.

PROVIDE TRANSITION ADAPTOR AND EXPANSION JOINT FOR CONDUIT AT END BENT 1 AND END BENT 2.

INSTALL STABILIZER'S MIDWAY BETWEEN DECK EXPANSION JOINTS. STABILIZER CAN NOT BE USED INSTEAD OF A HANGER ASSEMBLY.

INSTALL EXPANSION JOINTS AT EACH BENT.

THE CONCRETE SCREW INSERT SHALL HAVE A ROD SIZE OF ⅝" AND A PULL FORCE OF 1260 lbs.

FOR BRIDGE CONDUIT SYSTEM, SEE SPECIAL PROVISIONS.

THE CONDUIT WILL BE INSTALLED AT A MINIMUM OF 1 FOOT ABOVE LOW STEEL.

DETAILS SHOWN ARE FOR RGC CONDUIT, CONTRACTOR MAY USE FIBERGLASS REINFORCED EPOXY CONDUIT.

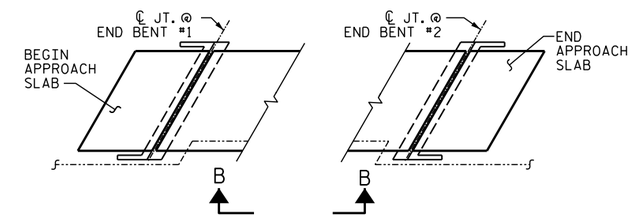

CONDUIT LAYOUT

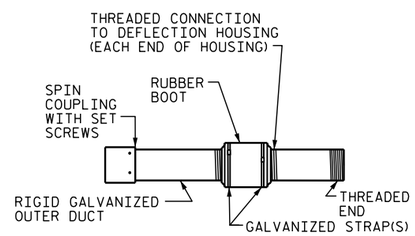

DETAIL "F"
DEFLECTION COUPLING

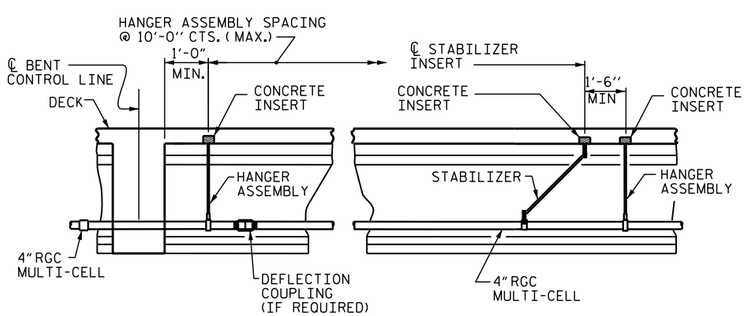

VIEW B-B
PRESTRESSED GIRDERS
CONTINUOUS FOR LIVE LOAD

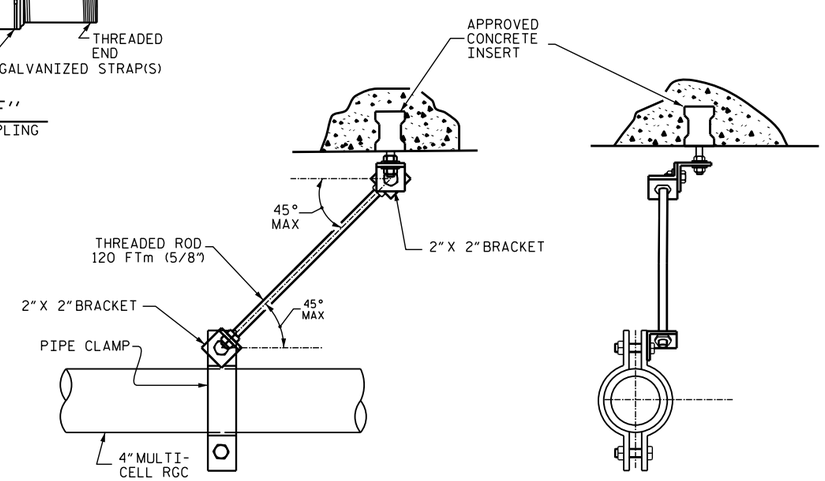

DETAIL "E"
STABILIZER

CONDUIT DETAILS

PROJECT NO. R-2633D
BRUNSWICK/NEW HANOVER COUNTY
STATION: -

STATE OF NORTH CAROLINA
DEPARTMENT OF TRANSPORTATION
RALEIGH

BRIDGE CONDUIT SYSTEM

NORTH CAROLINA PROFESSIONAL SEAL 26936 ENGINEER DAVID S. STUTTS

Docu Signed by: David Stutts
AAA2999A8BC6FF2...
1/31/2018

DOCUMENT NOT CONSIDERED FINAL UNLESS ALL SIGNATURES COMPLETED

REVISIONS							
NO.	BY:	DATE:	NO.	BY:	DATE:		
1			3				
2			4				

SHEET NO. S-1
TOTAL SHEETS 1

ASSEMBLED BY : J.P. ADAMS		DATE : 1/2018	
CHECKED BY : D.S. STUTTS		DATE : 1/2018	
DRAWN BY : RWW	2-4-03	REV. 5/1/06	TLA/GM
CHECKED BY : DBM	2-4-03	REV. 10/1/11	MAA/GM

$$$$$$SYSTIME$$$$$
$$$$$$$$$$$$$$$$$$$$$$$$DGN$$$$$$$$$$$$$$$$$$$$$$$$
$$$$USERNAME$$$$

PROJECT REFERENCE NO.	SHEET NO.
R-2633D	ITS-72

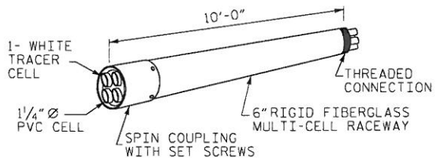

RIGID FIBERGLASS MULTI-CELL RACEWAY

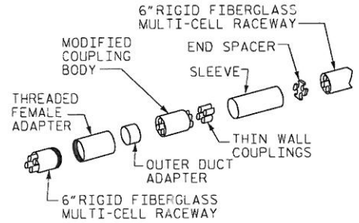

TRANSITION ADAPTER

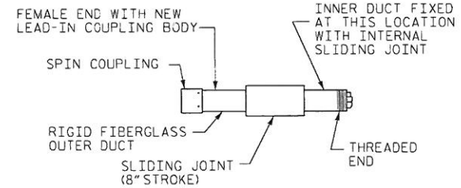

EXPANSION JOINT FITTING

DETAIL "D"

6" MULTI-CELL COMPONENTS

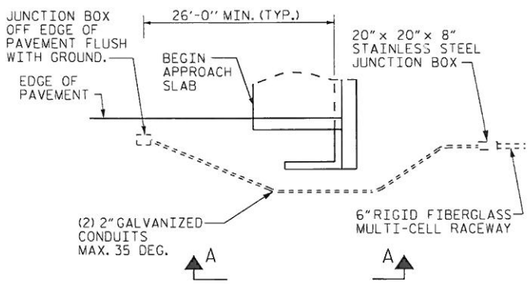

PLAN VIEW

CONDUIT ROUTING AT WING WALL

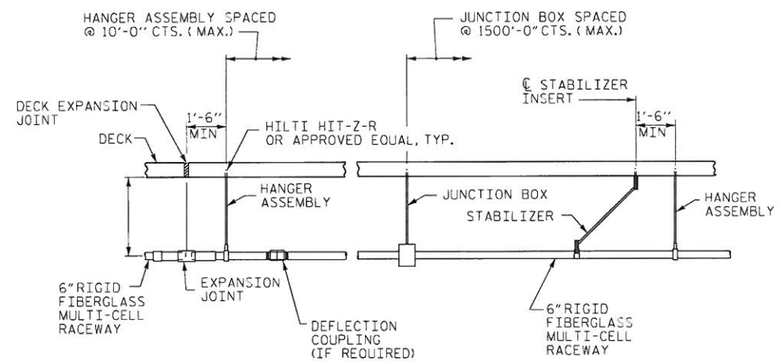

VIEW "B-B"

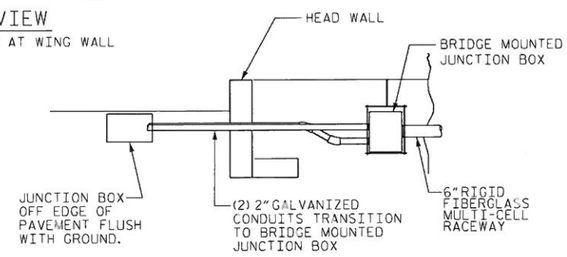

DETAIL "A"

CONDUIT ROUTING AT WING WALL

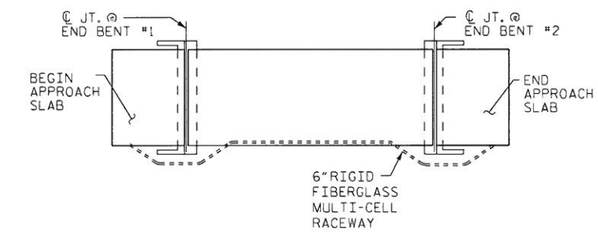

CONDUIT LAYOUT

NOTES

THE CONTRACTOR SHALL BE RESPONSIBLE FOR DETERMINING THE TOTAL QUANTITY OF CONDUIT NEEDED TO COMPLETE THE WORK AND THAT THE CONDUIT(S) ARE PLACED AT THE NOTED DIMENSION AND ABOVE THE BOTTOM OF THE GIRDER.

THE INSTALLATION OF THE CONDUIT SYSTEM SHALL BE PAID FOR PER LIN FOOT. SUM. THE PRICE SHALL INCLUDE ALL CONDUIT, HANGERS, STABILIZERS, EXPANSION JOINTS, CONCRETE INSERTS, FG SLEEVES, AND ALL NECESSARY HARDWARE TO COMPLETE THE WORK.

THE CONTRACTOR SHALL FIELD VERIFY THAT THE CONDUIT SYSTEM IS NOT IN CONFLICT WITH THE GUARDRAIL POSTS.

SEE DETAIL "C" ON TYPICAL SECTION SHEET (S-2) FOR HANGER ASSEMBLY INSTALLATION.

INSTALL SLEEVES PARALLEL TO GIRDERS. SEE VIEW "C" FOR SLEEVE INSTALLATION.

PROVIDE TRANSITION ADAPTOR (AND EXPANSION JOINT) FOR CONDUIT AT END BENT 1 AND END BENT 2.

INSTALL STABILIZER'S MIDWAY BETWEEN DECK EXPANSION JOINTS. STABILIZER CAN NOT BE USED INSTEAD OF A HANGER ASSEMBLY.

INSTALL EXPANSION JOINTS AT END BENT #1, BENT #1, BENT #3, BENT #6, BENT #9, BENT#12, BENT#14, BENT#16, BENT#19, BENT#22, BENT#25, BENT#28, BENT#31, BENT#34, BENT#37, BENT#40, BENT#43, BENT#46, BENT#49, BENT#52, BENT#58, AND END BENT #2

FOR ELECTRICAL CONDUIT SYSTEM FOR SIGNALS, SEE SPECIAL PROVISIONS.

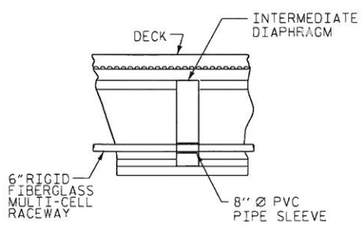

VIEW "C-C"

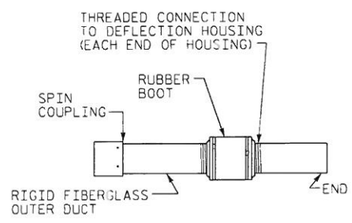

DETAIL "F"

DEFLECTION COUPLING

FIBERGLASS CONDUIT DETAILS

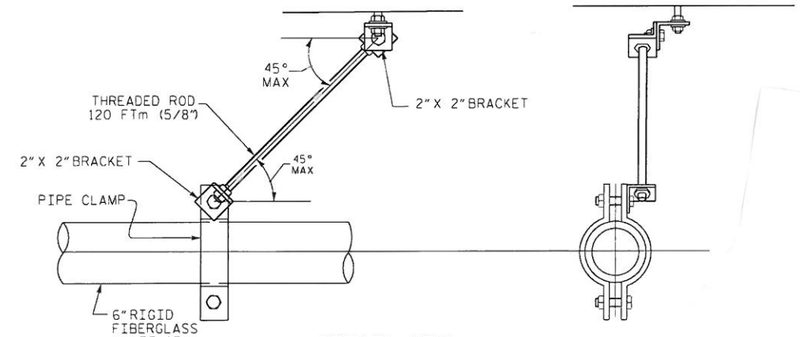

DETAIL "E"

STABILIZER

PRELIMINARY PLANS
DO NOT USE FOR CONSTRUCTION

PROJECT NO. R-2633D

BRUNSWICK/NEW HANOVER COUNTY

STATION:

STATE OF NORTH CAROLINA
DEPARTMENT OF TRANSPORTATION
RALEIGH

MULTI-CELL RACEWAY
TYPICAL SECTION DETAILS

Stantec
Stantec Consulting Services Inc.
801 Jones Franklin Road
Suite 300
Raleigh, NC 27606
Tel. (919) 851-6866
Fax. (919) 851-7024
www.stantec.com
License No. F-0672

DRAWN BY : J. B. GEILE DATE : 11/06/17
CHECKED BY : R. F. DECOLA DATE : 11/06/17
DESIGN ENGINEER OF RECORD: R. F. DECOLA DATE : 11/06/17

DOCUMENT NOT CONSIDERED FINAL UNLESS ALL SIGNATURES COMPLETED

REVISIONS								SHEET NO.
NO.	BY:	DATE:	NO.	BY:	DATE:			S-1
1			3					TOTAL SHEETS
2			4					2

PROJECT REFERENCE NO.	SHEET NO.
R-2633D	ITS-73

February 16, 2018

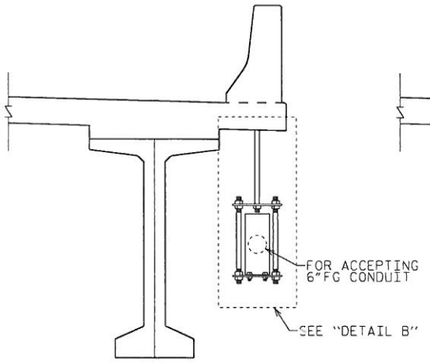

TYPICAL SECTION AT JUNCTION BOX FOR MIDSPAN

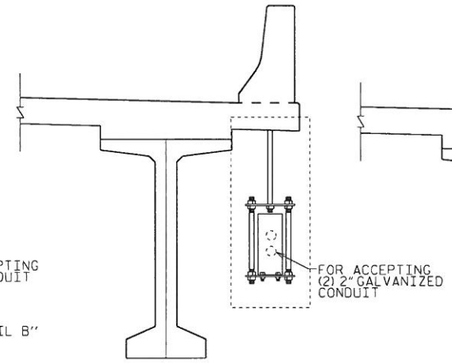

TYPICAL SECTION AT JUNCTION BOX AT HEADWALL BEGIN AND END

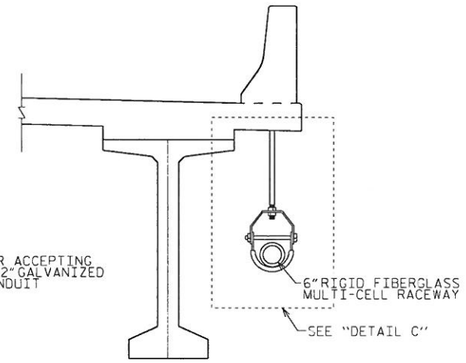

TYPICAL SECTION ALONG RACEWAY

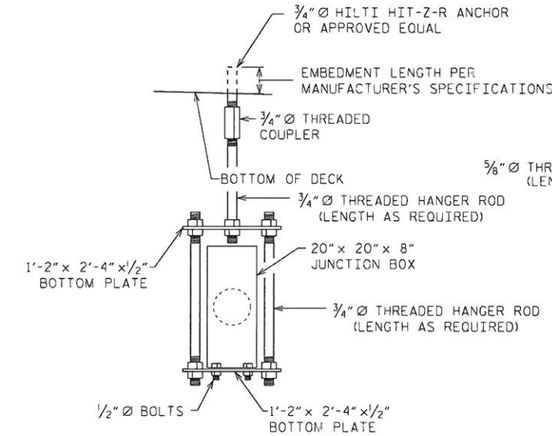

DETAIL "B"

JUNCTION BOX HANGER ASSEMBLY

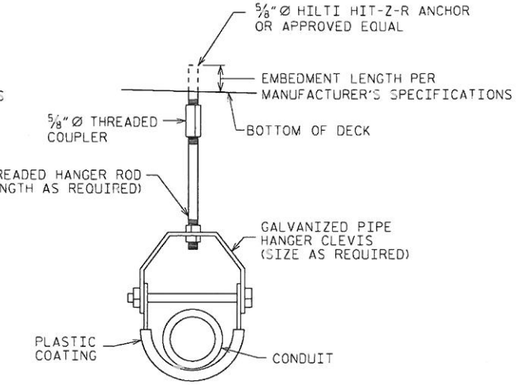

DETAIL "C"

RACEWAY HANGER ASSEMBLY

NOTE: THREADED RODS, COUPLERS, WASHERS, AND NUTS SHALL BE STAINLESS STEEL.

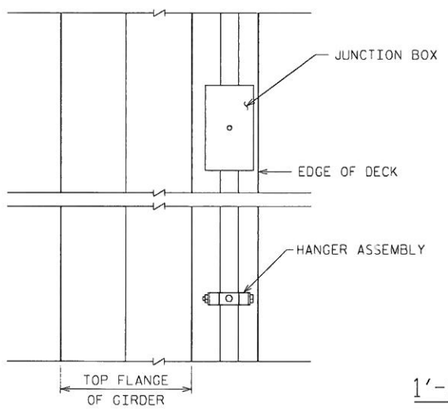

PLAN VIEW

CONCRETE BARRIER NOT SHOWN FOR CLARITY

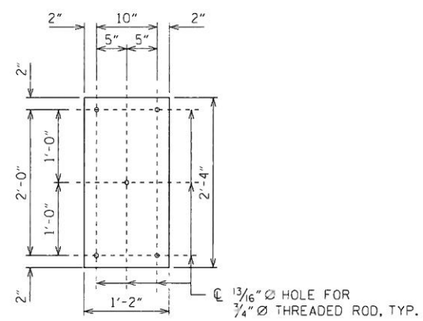

1'-2" x 2'-4" x 1/2" TOP PLATE DETAILS

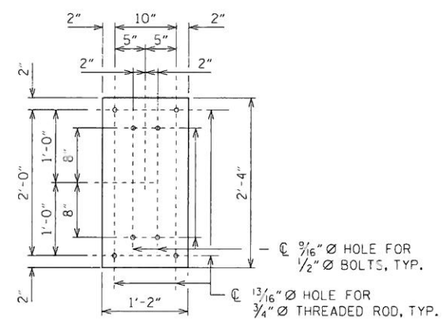

1'-2" x 2'-4" x 1/2" BOTTOM PLATE DETAILS

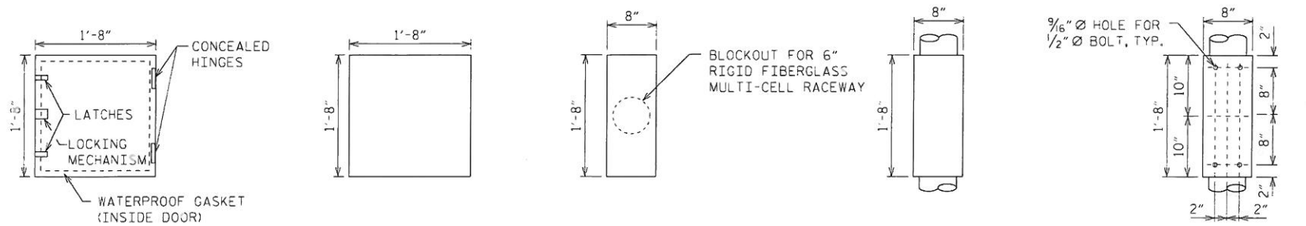

FRONT VIEW | BACK VIEW | SIDE VIEW | TOP VIEW | BOTTOM VIEW

BOX DETAILS

PRELIMINARY PLANS
DO NOT USE FOR CONSTRUCTION

PROJECT NO. R-2633D

BRUNSWICK/NEW HANOVER COUNTY

STATION:

STATE OF NORTH CAROLINA
DEPARTMENT OF TRANSPORTATION
RALEIGH

TYPICAL SECTION

DETAIL FOR BRIDGE MOUNTED 20"x20"x8" JUNCTION BOX AND HANGING DETAIL

Stantec
Stantec Consulting Services Inc.
801 Jones Franklin Road
Suite 300
Raleigh, NC 27606
Tel. (919) 851-6866
Fax. (919) 851-7024
www.stantec.com
License No. F-0672

DRAWN BY: J. B. GEILE DATE: 11/06/17
CHECKED BY: R. F. DECOLA DATE: 11/06/17
DESIGN ENGINEER OF RECORD: R. F. DECOLA DATE: 11/06/17

DOCUMENT NOT CONSIDERED FINAL UNLESS ALL SIGNATURES COMPLETED

REVISIONS								SHEET NO.
NO.	BY:	DATE:	NO.	BY:	DATE:			S-2
1			3					TOTAL SHEETS
2			4					2

February 16, 2018

PROJECT REFERENCE NO.	SHEET NO.
R-2633D	DD-TYP1

TYPICAL DIRECTIONAL DRILL

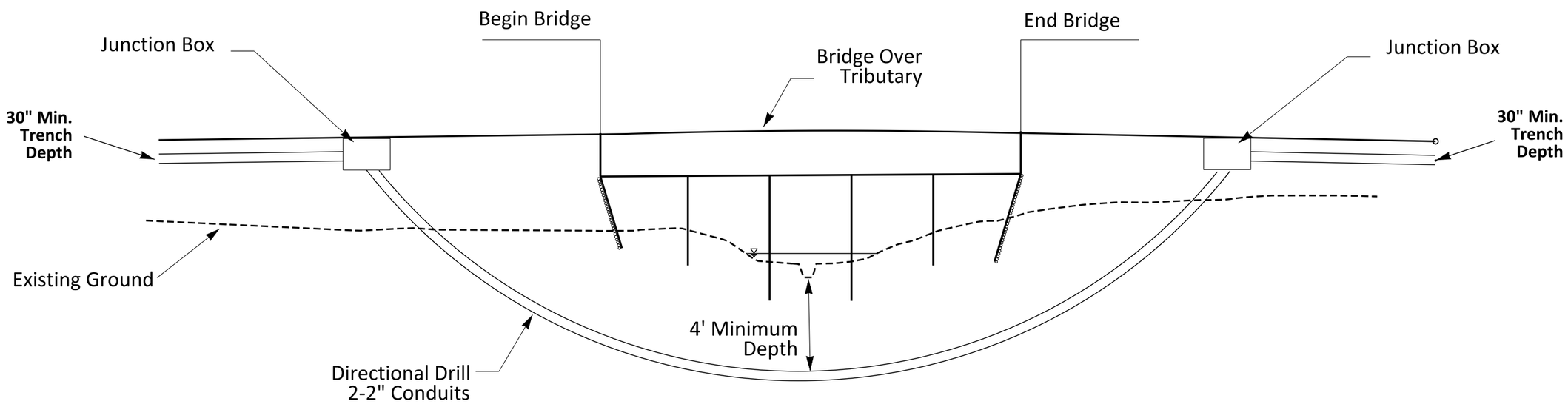

PROFILE VIEW

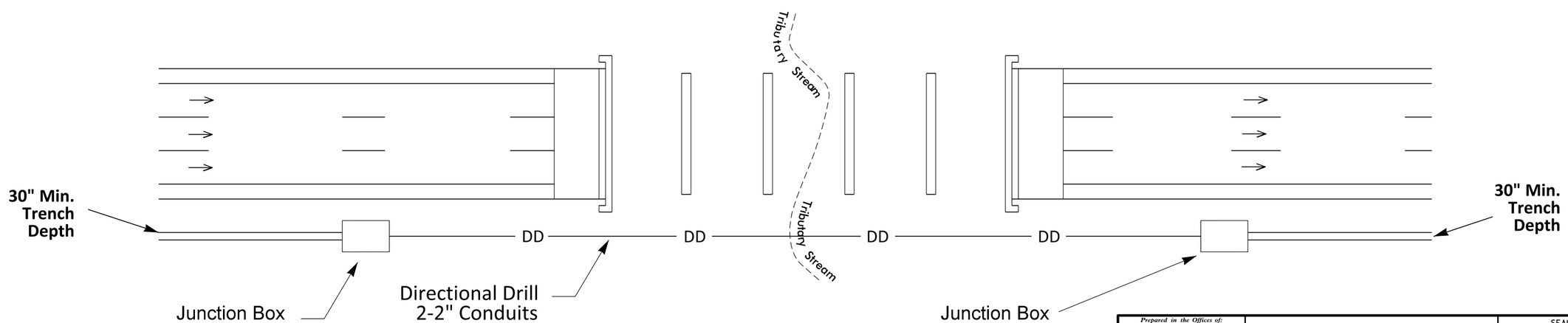

PLAN VIEW

Prepared in the Offices of:
Transportation Mobility and Safety Division
Intermodal Transportation Systems Section
STATE OF NORTH CAROLINA DEPARTMENT OF TRANSPORTATION
750 N. Greenfield Pkwy., Garner, NC 27529

DIRECTIONAL DRILL
TYPICAL

DIVISION 3 BRUNSWICK CO.

PLAN DATE: 2/7/18	REVIEWED BY:
PREPARED BY: L.E. NEAL	REVIEWED BY:

SCALE 0

N

REVISIONS	INIT.	DATE

SEAL

SIGNATURE DATE

CADD Filename:

PROJECT REFERENCE NO.	SHEET NO.
R-2633D	ITS-3

1. INSTALL REA, PE – 22, SHIELDED, TWISTED PAIR COMMUNICATIONS CABLE
2. INSTALL REA, PE – 38, (FIGURE – 8) SHIELDED, TWISTED PAIR COMMUNICATIONS CABLE
3. INSTALL REA, PE – 39, (UNDERGROUND) SHIELDED, TWISTED PAIR COMMUNICATIONS CABLE
4. INSTALL SMFO CABLE
5. INSTALL MMFO CABLE
6. INSTALL FIBER OPTIC DROP CABLE
7. INSTALL TRACER WIRE
8. TRENCH
9. INSTALL PVC CONDUIT
10. INSTALL RIGID, GALVANIZED STEEL CONDUIT
11. INSTALL RIGID, GALVANIZED STEEL RISER WITH WEATHERHEAD
12A. INSTALL RIGID, GALVANIZED STEEL RISER WITH FIBER OPTIC CABLE SEAL
12B. INSTALL BRIDGE MOUNTED FIBERGLASS CONDUIT, WITH FOUR–WAY INNERDUCT INSERT
13. INSTALL OUTER–DUCT POLYETHYLENE CONDUIT
14. INSTALL POLYETHYLENE CONDUIT
15. DIRECTIONAL DRILL CONDUIT
16. BORE AND JACK CONDUIT
17. INSTALL CABLE(S) IN EXISTING CONDUIT
18. INSTALL CABLE(S) IN NEW CONDUIT
19. INSTALL CABLE(S) IN EXISTING RISER
20. INSTALL CABLE(S) IN NEW RISER
21. INSTALL CABLE(S) IN EXISTING CONDUIT STUB–OUTS
22. INSTALL NEW CONDUIT INTO EXISTING CABINET BASE (USE EXISTING CONDUIT STUB–OUTS WHEN AVAILABLE)
23. INSTALL NEW RISER INTO EXISTING CABINET BASE (USE EXISTING CONDUIT STUB–OUTS WHEN AVAILABLE)
24. INSTALL NEW CONDUIT INTO EXISTING POLE MOUNTED CABINET
25. INSTALL NEW RISER INTO EXISTING POLE MOUNTED CABINET
26. TERMINATE COMMUNICATIONS CABLE ON EXISTING TELEMETRY INTERFACE PANEL IN TRAFFIC SIGNAL CONTROLLER CABINET
27. INSTALL NEW TELEMETRY INTERFACE PANEL IN TRAFFIC SIGNAL CONTROLLER CABINET
28. INSTALL INTERCONNECT CENTER, PATCH PANEL, JUMPERS, AND FUSION SPLICE CABLE IN CABINET
29. INSTALL UNDERGROUND SPLICE ENCLOSURE
30. INSTALL AERIAL SPLICE ENCLOSURE
31. INSTALL POLE MOUNTED SPLICE CABINET
32. INSTALL BASE MOUNTED SPLICE CABINET (336) WITH EXTENDED BASE
33. REMOVE EXISTING SPLICE CABINET
34. INSTALL CABINET FOUNDATION
35. REMOVE EXISTING CABINET FOUNDATION
36. INSTALL CCTV CAMERA ASSEMBLY
37. INSTALL CCTV CAMERA WOOD POLE
38. INSTALL CCTV CAMERA METAL POLE AND FOUNDATION
39. INSTALL SPECIAL OVERSIZED JUNCTION BOX WITH 100 FEET OF COMMUNICATION CABLE
40. INSTALL OVERSIZED JUNCTION BOX
41. INSTALL BRIDGE MOUNTED JUNCTION BOX
42. INSTALL WOOD POLE
43. REMOVE EXISTING WOOD POLE
44. INSTALL AERIAL GUY ASSEMBLY
45. INSTALL STANDARD GUY ASSEMBLY
46. INSTALL SIDEWALK GUY ASSEMBLY
47. INSTALL MESSENGER CABLE
48. REMOVE EXISTING COMMUNICATIONS CABLE AND MESSENGER CABLE
49. REMOVE EXISTING COMMUNICATIONS CABLE
50. INSTALL REEL END SPLICE
51. INSTALL CABLE STORAGE RACKS (SNOW SHOES) AND STORE 100 FEET OF CABLE
52. INSTALL DELINEATOR MARKER
53. STORE 50 FEET OF COMMUNICATIONS CABLE
54. LASH CABLE(S) TO EXISTING SIGNAL/COMMUNICATIONS CABLE
55. LASH CABLE(S) TO EXISTING MESSENGER CABLE
56. LASH CABLE(S) TO NEW MESSENGER CABLE
57. MODIFY EXISTING ELECTRICAL SERVICE
58. INSTALL NEW ELECTRICAL SERVICE FOR DMS/CCTV
59. INSTALL NEW BASE MOUNTED CABINET (336)
60. SEAL ALL CONDUIT ENTERING JUNCTION BOXES AND CABINETS WITH MOLDABLE DUCT SEAL
61. INSTALL ETHERNET SWITCH
62. LOCATE EXISTING CONDUIT STUBOUT FOR NEW JUNCTION BOX INSTALLATION
63. BOND MESSENGER CABLE AND RISER TO POLE GROUND

LEGEND

- FO — NEW AERIAL FIBER OPTIC COMMUNICATIONS CABLE
- EXI — EXISTING COMMUNICATIONS CABLE
- EXISTING FENCE LINE
- EXISTING WATER LINE /WETLANDS
- PROPOSED CONDUIT
- EXISTING CONDUIT
- DD — NEW DIRECTIONAL DRILLED CONDUIT
- B&J — NEW BORED AND JACKED CONDUIT
- NEW JUNCTION BOX
- EXISTING JUNCTION BOX
- NEW WOOD POLE
- EXISTING WOOD POLE
- S — NEW AERIAL SPLICE ENCLOSURE
- NEW METAL SIGNAL POLE
- NEW UNDERGROUND SPLICE CLOSURE
- EXISTING METAL SIGNAL POLE
- EXISTING CCTV CAMERA ASSEMBLY
- NEW STANDARD GUY ASSEMBLY
- NEW STANDARD GUY USING EXISTING ANCHOR
- NEW SIDEWALK GUY ASSEMBLY
- NEW CABLE STORAGE RACKS (SNOW SHOES)
- EXISTING CONTROLLER AND CABINET
- S — EXISTING SPLICE CABINET
- EXISTING DYNAMIC MESSAGE SIGN (DMS) ON SINGLE STEEL POLE
- SP — SIGNAL POLE
- XXXX–XX — ITS FIELD DEVICES

CONSTRUCTION NOTE SYMBOLOGY KEY

- XX — INDICATES NUMBER OF CABLES, LOOPS, ETC.
- XX — INDICATES NUMBER OF FIBERS PER CABLE, TWISTED PAIRS PER CABLE, ETC.
- XX — INDICATES NUMBER OF RISER(S)/CONDUIT(S)
- XX — INDICATES DIAMETER OF RISER(S)/CONDUIT(S) (INCH)

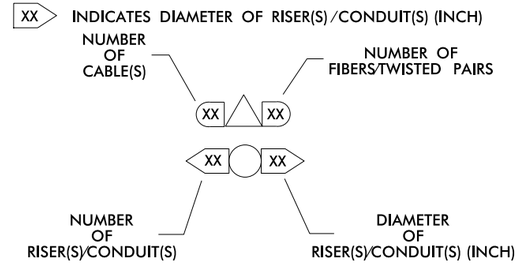

Prepared for the Offices of:
STATE OF NORTH CAROLINA DEPARTMENT OF TRANSPORTATION
750 N. Greenfield Pkwy., Garner, NC 27529

CONSTRUCTION NOTES

PLAN DATE:	AUGUST 2017	REVIEWED BY:	DEAN HARRIS
PREPARED BY:	J. INGRAM	REVIEWED BY:	BETSY L. WATSON

SCALE: 0 — N/A

REVISIONS	INIT.	DATE

SEAL

SIGNATURE DATE

CADD FILE NAME

February 16, 2018

PROJECT REFERENCE NO.	SHEET NO.
R-2633D	ITS-4

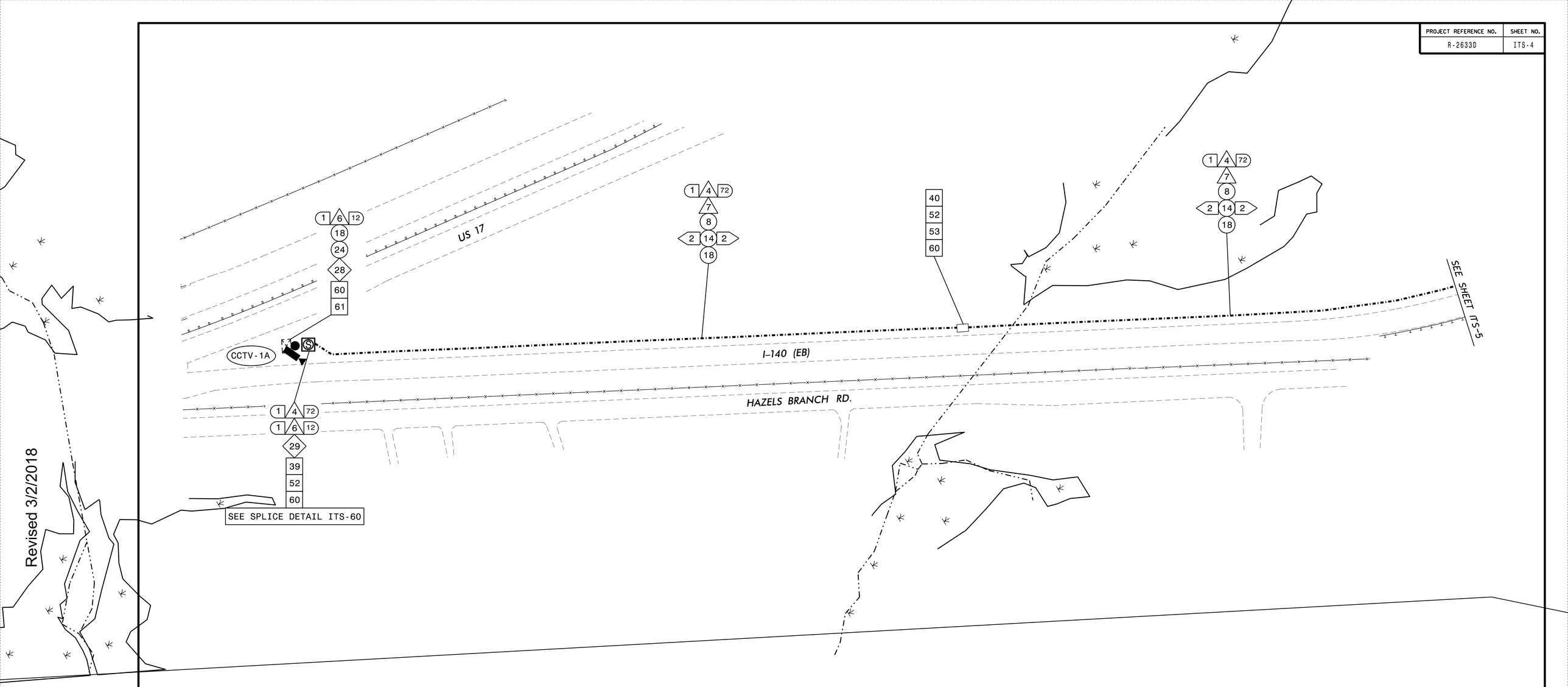

GENERAL NOTE:

CONTRACTOR TO MAINTAIN A MINIMUM OF SIX (6) FEET FROM EDGE OF PAVEMENT WHEN TRENCHING PARALLEL TO THE ROADWAY.

1. INSTALL REA, PE – 22, SHIELDED, TWISTED PAIR COMMUNICATIONS CABLE
2. INSTALL REA, PE – 38, (FIGURE – 8) SHIELDED, TWISTED PAIR COMMUNICATIONS CABLE
3. INSTALL 3-CONDUCTOR, CLASS B, STRANDED UNDERGROUND POWER CABLE
4. INSTALL SMFO CABLE
5. INSTALL CAT 5e COMMUNICATIONS CABLE
6. INSTALL FIBER OPTIC DROP CABLE
7. INSTALL TRACER WIRE
8. TRENCH
9. INSTALL PVC CONDUIT
10. INSTALL RIGID, GALVANIZED STEEL CONDUIT
11. INSTALL RIGID, GALVANIZED STEEL RISER WITH WEATHERHEAD
12. INSTALL RIGID, GALVANIZED STEEL RISER WITH FIBER OPTIC CABLE SEAL
13. INSTALL OUTER-DUCT POLYETHYLENE CONDUIT
14. INSTALL POLYETHYLENE CONDUIT
15. DIRECTIONAL DRILL CONDUIT
16. INSTALL BRIDGE MOUNTED FIBERGLASS CONDUIT, WITH FOUR-WAY INNERDUCT INSERT
17. INSTALL CABLE(S) IN EXISTING CONDUIT
18. INSTALL CABLE(S) IN NEW CONDUIT
19. INSTALL CABLE(S) IN EXISTING RISER
20. INSTALL CABLE(S) IN NEW RISER
21. INSTALL CABLE(S) IN EXISTING CONDUIT STUBOUTS
22. INSTALL NEW CONDUIT INTO EXISTING CABINET BASE (USE EXISTING CONDUIT STUB-OUTS WHEN AVAILABLE)
23. INSTALL NEW RISER INTO EXISTING CABINET BASE (USE EXISTING CONDUIT STUB-OUTS WHEN AVAILABLE)
24. INSTALL NEW CONDUIT INTO EXISTING POLE MOUNTED CABINET
25. INSTALL NEW RISER INTO EXISTING POLE MOUNTED CABINET
26. TERMINATE COMMUNICATIONS CABLE ON EXISTING TELEMETRY INTERFACE PANEL IN TRAFFIC SIGNAL CONTROLLER CABINET
27. INSTALL NEW TELEMETRY INTERFACE PANEL IN TRAFFIC SIGNAL CONTROLLER CABINET
28. INSTALL INTERCONNECT CENTER, PATCH PANEL, JUMPERS, AND FUSION SPLICE CABLE IN CABINET
29. INSTALL UNDERGROUND SPLICE ENCLOSURE
30. INSTALL AERIAL SPLICE ENCLOSURE
31. INSTALL POLE MOUNTED SPLICE CABINET
32. INSTALL BASE MOUNTED SPLICE CABINET (336) WITH EXTEND BASE
33. REMOVE EXISTING SPLICE CABINET
34. INSTALL CABINET FOUNDATION
35. REMOVE EXISTING CABINET FOUNDATION
36. INSTALL CCTV CAMERA ASSEMBLY
37. INSTALL CCTV CAMERA WOOD POLE
38. INSTALL CCTV CAMERA METAL POLE AND FOUNDATION
39. INSTALL SPECIAL OVERSIZED JUNCTION BOX WITH 100 FEET OF COMMUNICATIONS CABLE
40. INSTALL OVERSIZED JUNCTION BOX
41. INSTALL BRIDGE MOUNTED JUNCTION BOX
42. INSTALL WOOD POLE
43. REMOVE EXISTING WOOD POLE
44. INSTALL AERIAL GUY ASSEMBLY
45. INSTALL STANDARD GUY ASSEMBLY
46. INSTALL SIDEWALK GUY ASSEMBLY
47. INSTALL MESSENGER CABLE
48. REMOVE EXISTING COMMUNICATIONS CABLE AND MESSENGER CABLE
49. REMOVE EXISTING COMMUNICATIONS CABLE
50. INSTALL REEL END SPLICE
51. INSTALL CABLE STORAGE RACKS (SNOW SHOES) AND STORE 100 FEET OF CABLE
52. INSTALL DELINEATOR MARKER
53. STORE 50 FEET OF COMMUNICATIONS CABLE
54. LASH CABLE(S) TO EXISTING SIGNAL / COMMUNICATIONS CABLE
55. LASH CABLE(S) TO EXISTING MESSENGER CABLE
56. LASH CABLE(S) TO NEW MESSENGER CABLE
57. MODIFY EXISTING ELECTRICAL SERVICE
58. INSTALL NEW ELECTRICAL SERVICE FOR DMS
59. INSTALL NEW BASE MOUNTED CABINET (336)
60. SEAL ALL CONDUIT ENTERING JUNCTION BOXES AND CABINETS WITH MOLDABLE DUCT SEAL
61. INSTALL ETHERNET SWITCH
62. LOCATE EXISTING JUNCTION BOX AND CONNECT WITH NEW CONDUIT
63. BOND MESSENGER CABLE AND RISER TO POLE GROUND

Prepared for the Offices of:
STATE OF NORTH CAROLINA DEPARTMENT OF TRANSPORTATION
Transportation Mobility and Safety Division
Intelligent Transportation Systems
750 N. Greenfield Pkwy., Garner, NC 27529

CABLE ROUTING PLANS

DIV 3 BRUNSWICK CO. Near WILMINGTON

PLAN DATE:	January 2018	REVIEWED BY:	G. Green
PREPARED BY:	L. Neal	REVIEWED BY:	P. Marak

SCALE	REVISIONS	INIT.	DATE
NTS			

SEAL

PRELIMINARY PLANS
DO NOT USE FOR CONSTRUCTION

SIGNATURE DATE

CADD FILE NAME

PROJECT REFERENCE NO.	SHEET NO.
R-2633D	ITS-5

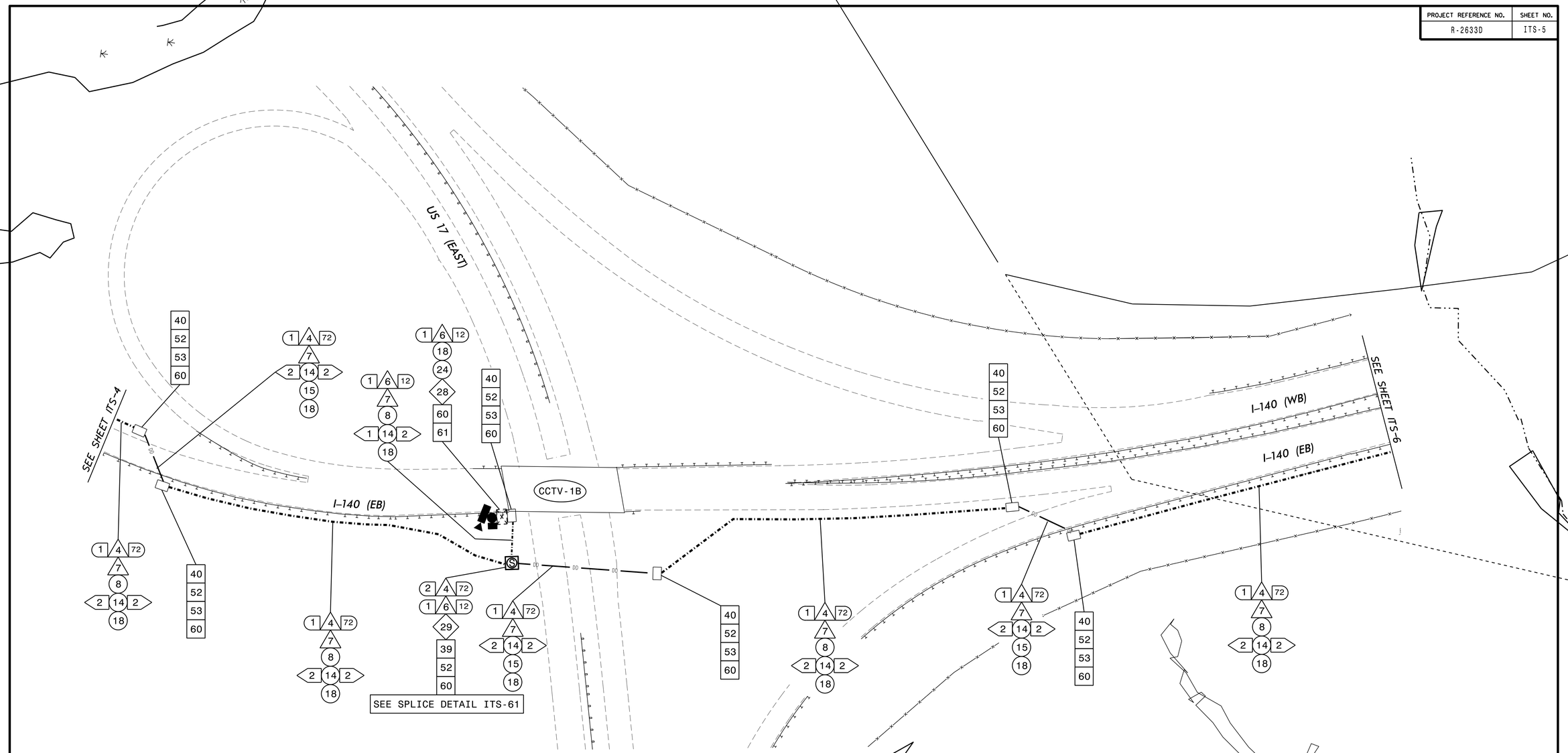

GENERAL NOTE:

CONTRACTOR TO MAINTAIN A MINIMUM OF SIX (6) FEET FROM EDGE OF PAVEMENT WHEN TRENCHING PARALLEL TO THE ROADWAY.

1. INSTALL REA, PE – 22, SHIELDED, TWISTED PAIR COMMUNICATIONS CABLE
2. INSTALL REA, PE – 38, (FIGURE – 8) SHIELDED, TWISTED PAIR COMMUNICATIONS CABLE
3. INSTALL 3–CONDUCTOR, CLASS B, STRANDED UNDERGROUND POWER CABLE
4. INSTALL SMFO CABLE
5. INSTALL CAT 5e COMMUNICATIONS CABLE
6. INSTALL FIBER OPTIC DROP CABLE
7. INSTALL TRACER WIRE
8. TRENCH
9. INSTALL PVC CONDUIT
10. INSTALL RIGID, GALVANIZED STEEL CONDUIT
11. INSTALL RIGID, GALVANIZED STEEL RISER WITH WEATHERHEAD
12. INSTALL RIGID, GALVANIZED STEEL RISER WITH FIBER OPTIC CABLE SEAL
13. INSTALL OUTER–DUCT POLYETHYLENE CONDUIT
14. INSTALL POLYETHYLENE CONDUIT
15. DIRECTIONAL DRILL CONDUIT
16. INSTALL BRIDGE MOUNTED FIBERGLASS CONDUIT, WITH FOUR–WAY INNERDUCT INSERT
17. INSTALL CABLE(S) IN EXISTING CONDUIT
18. INSTALL CABLE(S) IN NEW CONDUIT
19. INSTALL CABLE(S) IN EXISTING RISER
20. INSTALL CABLE(S) IN NEW RISER
21. INSTALL CABLE(S) IN EXISTING CONDUIT STUBOUTS
22. INSTALL NEW CONDUIT INTO EXISTING CABINET BASE (USE EXISTING CONDUIT STUB–OUTS WHEN AVAILABLE)
23. INSTALL NEW RISER INTO EXISTING CABINET BASE (USE EXISTING CONDUIT STUB–OUTS WHEN AVAILABLE)
24. INSTALL NEW CONDUIT INTO EXISTING POLE MOUNTED CABINET
25. INSTALL NEW RISER INTO EXISTING POLE MOUNTED CABINET
26. TERMINATE COMMUNICATIONS CABLE ON EXISTING TELEMETRY INTERFACE PANEL IN TRAFFIC SIGNAL CONTROLLER CABINET
27. INSTALL NEW TELEMETRY INTERFACE PANEL IN TRAFFIC SIGNAL CONTROLLER CABINET
28. INSTALL INTERCONNECT CENTER, PATCH PANEL, JUMPERS, AND FUSION SPLICE CABLE IN CABINET
29. INSTALL UNDERGROUND SPLICE ENCLOSURE
30. INSTALL AERIAL SPLICE ENCLOSURE
31. INSTALL POLE MOUNTED SPLICE CABINET
32. INSTALL BASE MOUNTED SPLICE CABINET (336) WITH EXTEND BASE
33. REMOVE EXISTING SPLICE CABINET
34. INSTALL CABINET FOUNDATION
35. REMOVE EXISTING CABINET FOUNDATION
36. INSTALL CCTV CAMERA ASSEMBLY
37. INSTALL CCTV CAMERA WOOD POLE
38. INSTALL CCTV CAMERA METAL POLE AND FOUNDATION
39. INSTALL SPECIAL OVERSIZED JUNCTION BOX WITH 100 FEET OF COMMUNICATIONS CABLE
40. INSTALL OVERSIZED JUNCTION BOX
41. INSTALL BRIDGE MOUNTED JUNCTION BOX
42. INSTALL WOOD POLE
43. REMOVE EXISTING WOOD POLE
44. INSTALL AERIAL GUY ASSEMBLY
45. INSTALL STANDARD GUY ASSEMBLY
46. INSTALL SIDEWALK GUY ASSEMBLY
47. INSTALL MESSENGER CABLE
48. REMOVE EXISTING COMMUNICATIONS CABLE AND MESSENGER CABLE
49. REMOVE EXISTING COMMUNICATIONS CABLE
50. INSTALL REEL END SPLICE
51. INSTALL CABLE STORAGE RACKS (SNOW SHOES) AND STORE 100 FEET OF CABLE
52. INSTALL DELINEATOR MARKER
53. STORE 50 FEET OF COMMUNICATIONS CABLE
54. LASH CABLE(S) TO EXISTING SIGNAL / COMMUNICATIONS CABLE
55. LASH CABLE(S) TO EXISTING MESSENGER CABLE
56. LASH CABLE(S) TO NEW MESSENGER CABLE
57. MODIFY EXISTING ELECTRICAL SERVICE
58. INSTALL NEW ELECTRICAL SERVICE FOR DMS
59. INSTALL NEW BASE MOUNTED CABINET (336)
60. SEAL ALL CONDUIT ENTERING JUNCTION BOXES AND CABINETS WITH MOLDABLE DUCT SEAL
61. INSTALL ETHERNET SWITCH
62. LOCATE EXISTING JUNCTION BOX AND CONNECT WITH NEW CONDUIT
63. BOND MESSENGER CABLE AND RISER TO POLE GROUND

Prepared for the Offices of:

Transportation Mobility and Safety Division
STATE OF NORTH CAROLINA DEPARTMENT OF TRANSPORTATION
Transportation Building, 1 South Wilmington Street

750 N. Greenfield Pkwy., Garner, NC 27529

CABLE ROUTING PLANS

DIV 3 BRUNSWICK CO. Near WILMINGTON

PLAN DATE:	January 2018	REVIEWED BY:	G. Green
PREPARED BY:	L. Neal	REVIEWED BY:	P. Marak

SCALE: NTS

REVISIONS	INIT.	DATE

SEAL

PRELIMINARY PLANS
DO NOT USE FOR CONSTRUCTION

SIGNATURE DATE

CADD FILE NAME

Revised 3/2/2018

PROJECT REFERENCE NO.	SHEET NO.
R-2633D	ITS-6

Revised 3/2/2018

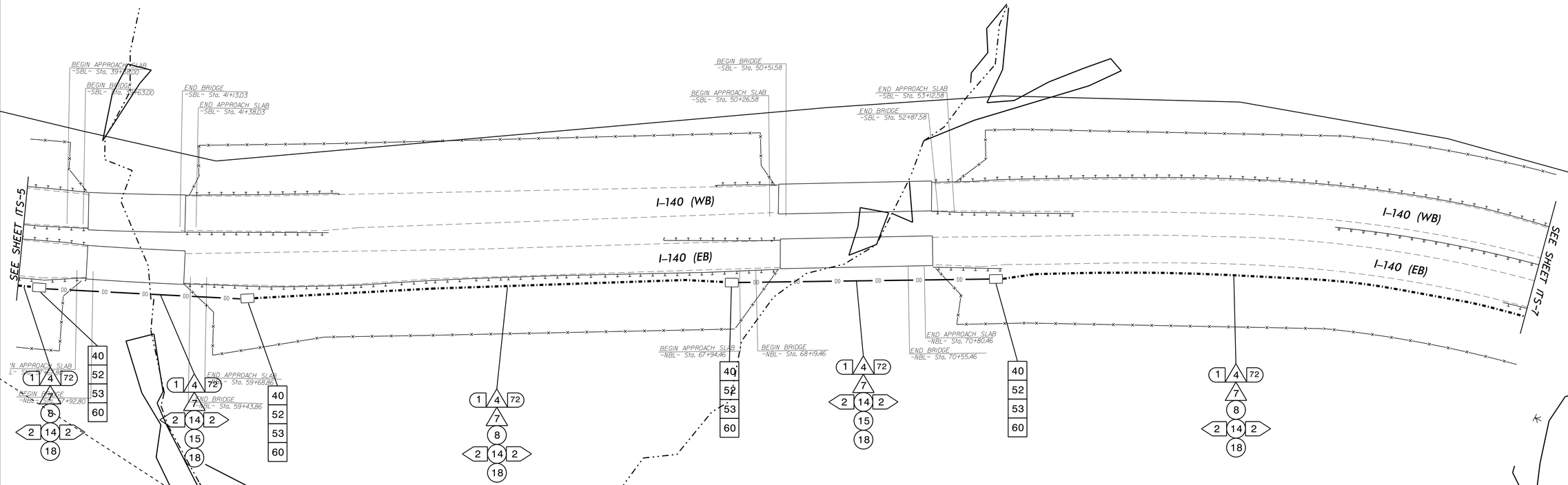

GENERAL NOTE:

CONTRACTOR TO MAINTAIN A MINIMUM OF SIX (6) FEET FROM EDGE OF PAVEMENT WHEN TRENCHING PARALLEL TO THE ROADWAY.

1. INSTALL REA, PE – 22, SHIELDED, TWISTED PAIR COMMUNICATIONS CABLE
2. INSTALL REA, PE – 38, (FIGURE – 8) SHIELDED, TWISTED PAIR COMMUNICATIONS CABLE
3. INSTALL 3-CONDUCTOR, CLASS B, STRANDED UNDERGROUND POWER CABLE
4. INSTALL SMFO CABLE
5. INSTALL CAT 5e COMMUNICATIONS CABLE
6. INSTALL FIBER OPTIC DROP CABLE
7. INSTALL TRACER WIRE
8. TRENCH
9. INSTALL PVC CONDUIT
10. INSTALL RIGID, GALVANIZED STEEL CONDUIT
11. INSTALL RIGID, GALVANIZED STEEL RISER WITH WEATHERHEAD
12. INSTALL RIGID, GALVANIZED STEEL RISER WITH FIBER OPTIC CABLE SEAL
13. INSTALL OUTER-DUCT POLYETHYLENE CONDUIT
14. INSTALL POLYETHYLENE CONDUIT
15. DIRECTIONAL DRILL CONDUIT
16. INSTALL BRIDGE MOUNTED FIBERGLASS CONDUIT, WITH FOUR-WAY INNERDUCT INSERT
17. INSTALL CABLE(S) IN EXISTING CONDUIT
18. INSTALL CABLE(S) IN NEW CONDUIT
19. INSTALL CABLE(S) IN EXISTING RISER
20. INSTALL CABLE(S) IN NEW RISER
21. INSTALL CABLE(S) IN EXISTING CONDUIT STUBOUTS
22. INSTALL NEW CONDUIT INTO EXISTING CABINET BASE (USE EXISTING CONDUIT STUB-OUTS WHEN AVAILABLE)
23. INSTALL NEW RISER INTO EXISTING CABINET BASE (USE EXISTING CONDUIT STUB-OUTS WHEN AVAILABLE)
24. INSTALL NEW CONDUIT INTO EXISTING POLE MOUNTED CABINET
25. INSTALL NEW RISER INTO EXISTING POLE MOUNTED CABINET
26. TERMINATE COMMUNICATIONS CABLE ON EXISTING TELEMETRY INTERFACE PANEL IN TRAFFIC SIGNAL CONTROLLER CABINET
27. INSTALL NEW TELEMETRY INTERFACE PANEL IN TRAFFIC SIGNAL CONTROLLER CABINET
28. INSTALL INTERCONNECT CENTER PATCH PANEL, JUMPERS, AND FUSION SPLICE CABLE IN CABINET
29. INSTALL UNDERGROUND SPLICE ENCLOSURE
30. INSTALL AERIAL SPLICE ENCLOSURE
31. INSTALL POLE MOUNTED SPLICE CABINET
32. INSTALL BASE MOUNTED SPLICE CABINET (336) WITH EXTEND BASE
33. REMOVE EXISTING SPLICE CABINET
34. INSTALL CABINET FOUNDATION
35. REMOVE EXISTING CABINET FOUNDATION
36. INSTALL CCTV CAMERA ASSEMBLY
37. INSTALL CCTV CAMERA WOOD POLE
38. INSTALL CCTV CAMERA METAL POLE AND FOUNDATION
39. INSTALL SPECIAL OVERSIZED JUNCTION BOX WITH 100 FEET OF COMMUNICATIONS CABLE
40. INSTALL OVERSIZED JUNCTION BOX
41. INSTALL BRIDGE MOUNTED JUNCTION BOX
42. INSTALL WOOD POLE
43. REMOVE EXISTING WOOD POLE
44. INSTALL AERIAL GUY ASSEMBLY
45. INSTALL STANDARD GUY ASSEMBLY
46. INSTALL SIDEWALK GUY ASSEMBLY
47. INSTALL MESSENGER CABLE
48. REMOVE EXISTING COMMUNICATIONS CABLE AND MESSENGER CABLE
49. REMOVE EXISTING COMMUNICATIONS CABLE
50. INSTALL REEL END SPLICE
51. INSTALL CABLE STORAGE RACKS (SNOW SHOES) AND STORE 100 FEET OF CABLE
52. INSTALL DELINEATOR MARKER
53. STORE 50 FEET OF COMMUNICATIONS CABLE
54. LASH CABLE(S) TO EXISTING SIGNAL / COMMUNICATIONS CABLE
55. LASH CABLE(S) TO EXISTING MESSENGER CABLE
56. LASH CABLE(S) TO NEW MESSENGER CABLE
57. MODIFY EXISTING ELECTRICAL SERVICE
58. INSTALL NEW ELECTRICAL SERVICE FOR DMS
59. INSTALL NEW BASE MOUNTED CABINET (336)
60. SEAL ALL CONDUIT ENTERING JUNCTION BOXES AND CABINETS WITH MOLDABLE DUCT SEAL
61. INSTALL ETHERNET SWITCH
62. LOCATE EXISTING JUNCTION BOX AND CONNECT WITH NEW CONDUIT
63. BOND MESSENGER CABLE AND RISER TO POLE GROUND

Prepared for the Offices of:

Transportation Mobility and Safety Division
STATE OF NORTH CAROLINA DEPARTMENT OF TRANSPORTATION
Intelligent Transportation Systems Section

750 N. Greenfield Pkwy., Garner, NC 27529

CABLE ROUTING PLANS

DIV 3 BRUNSWICK CO. Near WILMINGTON

PLAN DATE:	January 2018	REVIEWED BY:	G. Green
PREPARED BY:	L. Neal	REVIEWED BY:	P. Marak

SCALE: NTS

REVISIONS	INIT.	DATE

SEAL

PRELIMINARY PLANS
DO NOT USE FOR CONSTRUCTION

SIGNATURE DATE

CADD FILE NAME

PROJECT REFERENCE NO.	SHEET NO.
R-2633D	ITS-7

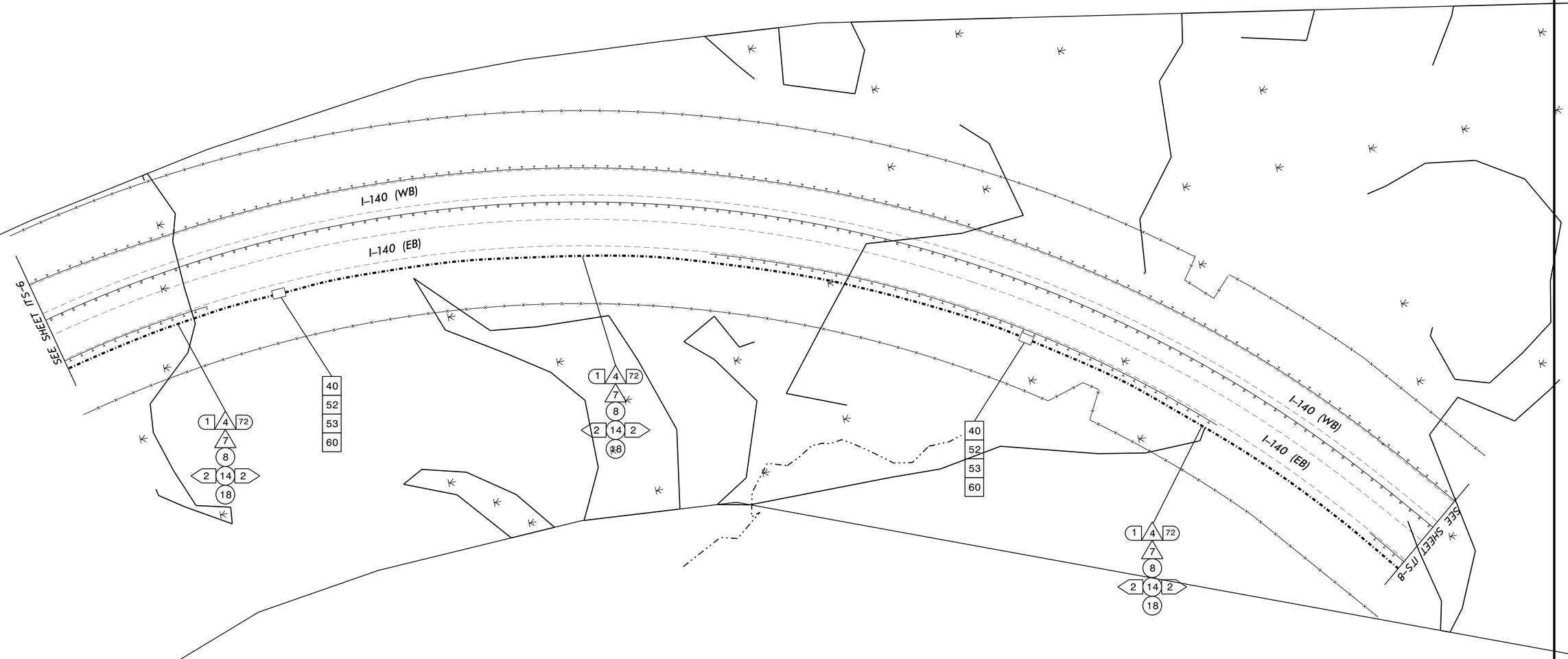

GENERAL NOTE:

CONTRACTOR TO MAINTAIN A MINIMUM OF SIX (6) FEET FROM EDGE OF PAVEMENT WHEN TRENCHING PARALLEL TO THE ROADWAY.

1. INSTALL REA, PE – 22, SHIELDED, TWISTED PAIR COMMUNICATIONS CABLE
2. INSTALL REA, PE – 38, (FIGURE – 8) SHIELDED, TWISTED PAIR COMMUNICATIONS CABLE
3. INSTALL 3-CONDUCTOR, CLASS B, STRANDED UNDERGROUND POWER CABLE
4. INSTALL SMFO CABLE
5. INSTALL CAT 5e COMMUNICATIONS CABLE
6. INSTALL FIBER OPTIC DROP CABLE
7. INSTALL TRACER WIRE
8. TRENCH
9. INSTALL PVC CONDUIT
10. INSTALL RIGID, GALVANIZED STEEL CONDUIT
11. INSTALL RIGID, GALVANIZED STEEL RISER WITH WEATHERHEAD
12. INSTALL RIGID, GALVANIZED STEEL RISER WITH FIBER OPTIC CABLE SEAL
13. INSTALL OUTER-DUCT POLYETHYLENE CONDUIT
14. INSTALL POLYETHYLENE CONDUIT
15. DIRECTIONAL DRILL CONDUIT
16. INSTALL BRIDGE MOUNTED FIBERGLASS CONDUIT, WITH FOUR-WAY INNERDUCT INSERT
17. INSTALL CABLE(S) IN EXISTING CONDUIT
18. INSTALL CABLE(S) IN NEW CONDUIT
19. INSTALL CABLE(S) IN EXISTING RISER
20. INSTALL CABLE(S) IN NEW RISER
21. INSTALL CABLE(S) IN EXISTING CONDUIT STUBOUTS
22. INSTALL NEW CONDUIT INTO EXISTING CABINET BASE (USE EXISTING CONDUIT STUB-OUTS WHEN AVAILABLE)
23. INSTALL NEW RISER INTO EXISTING CABINET BASE (USE EXISTING CONDUIT STUB-OUTS WHEN AVAILABLE)
24. INSTALL NEW CONDUIT INTO EXISTING POLE MOUNTED CABINET
25. INSTALL NEW RISER INTO EXISTING POLE MOUNTED CABINET
26. TERMINATE COMMUNICATIONS CABLE ON EXISTING TELEMETRY INTERFACE PANEL IN TRAFFIC SIGNAL CONTROLLER CABINET
27. INSTALL NEW TELEMETRY INTERFACE PANEL IN TRAFFIC SIGNAL CONTROLLER CABINET
28. INSTALL INTERCONNECT CENTER, PATCH PANEL, JUMPERS, AND FUSION SPLICE CABLE IN CABINET
29. INSTALL UNDERGROUND SPLICE ENCLOSURE
30. INSTALL AERIAL SPLICE ENCLOSURE
31. INSTALL POLE MOUNTED SPLICE CABINET
32. INSTALL BASE MOUNTED SPLICE CABINET (336) WITH EXTEND BASE
33. REMOVE EXISTING SPLICE CABINET
34. INSTALL CABINET FOUNDATION
35. REMOVE EXISTING CABINET FOUNDATION
36. INSTALL CCTV CAMERA ASSEMBLY
37. INSTALL CCTV CAMERA WOOD POLE
38. INSTALL CCTV CAMERA METAL POLE AND FOUNDATION
39. INSTALL SPECIAL OVERSIZED JUNCTION BOX WITH 100 FEET OF COMMUNICATIONS CABLE
40. INSTALL OVERSIZED JUNCTION BOX
41. INSTALL BRIDGE MOUNTED JUNCTION BOX
42. INSTALL WOOD POLE
43. REMOVE EXISTING WOOD POLE
44. INSTALL AERIAL GUY ASSEMBLY
45. INSTALL STANDARD GUY ASSEMBLY
46. INSTALL SIDEWALK GUY ASSEMBLY
47. INSTALL MESSENGER CABLE
48. REMOVE EXISTING COMMUNICATIONS CABLE AND MESSENGER CABLE
49. REMOVE EXISTING COMMUNICATIONS CABLE
50. INSTALL REEL END SPLICE
51. INSTALL CABLE STORAGE RACKS (SNOW SHOES) AND STORE 100 FEET OF CABLE
52. INSTALL DELINEATOR MARKER
53. STORE 50 FEET OF COMMUNICATIONS CABLE
54. LASH CABLE(S) TO EXISTING SIGNAL / COMMUNICATIONS CABLE
55. LASH CABLE(S) TO EXISTING MESSENGER CABLE
56. LASH CABLE(S) TO NEW MESSENGER CABLE
57. MODIFY EXISTING ELECTRICAL SERVICE
58. INSTALL NEW ELECTRICAL SERVICE FOR DMS
59. INSTALL NEW BASE MOUNTED CABINET (336)
60. SEAL ALL CONDUIT ENTERING JUNCTION BOXES AND CABINETS WITH MOLDABLE DUCT SEAL
61. INSTALL ETHERNET SWITCH
62. LOCATE EXISTING JUNCTION BOX AND CONNECT WITH NEW CONDUIT
63. BOND MESSENGER CABLE AND RISER TO POLE GROUND

Prepared for the Offices of:

STATE OF NORTH CAROLINA DEPARTMENT OF TRANSPORTATION
Transportation Mobility and Safety Division
Intermodal Transportation Systems

750 N. Greenfield Pkwy., Garner, NC 27529

SCALE: NTS

CABLE ROUTING PLANS

DIV 3 BRUNSWICK CO. Near WILMINGTON

PLAN DATE:	January 2018	REVIEWED BY:	G. Green
PREPARED BY:	L. Neal	REVIEWED BY:	P. Marak

REVISIONS	INIT.	DATE

SEAL

PRELIMINARY PLANS
DO NOT USE FOR CONSTRUCTION

SIGNATURE DATE

CADD FILE NAME

Revised 3/2/2018

PROJECT REFERENCE NO.	SHEET NO.
R-2633D	ITS-8

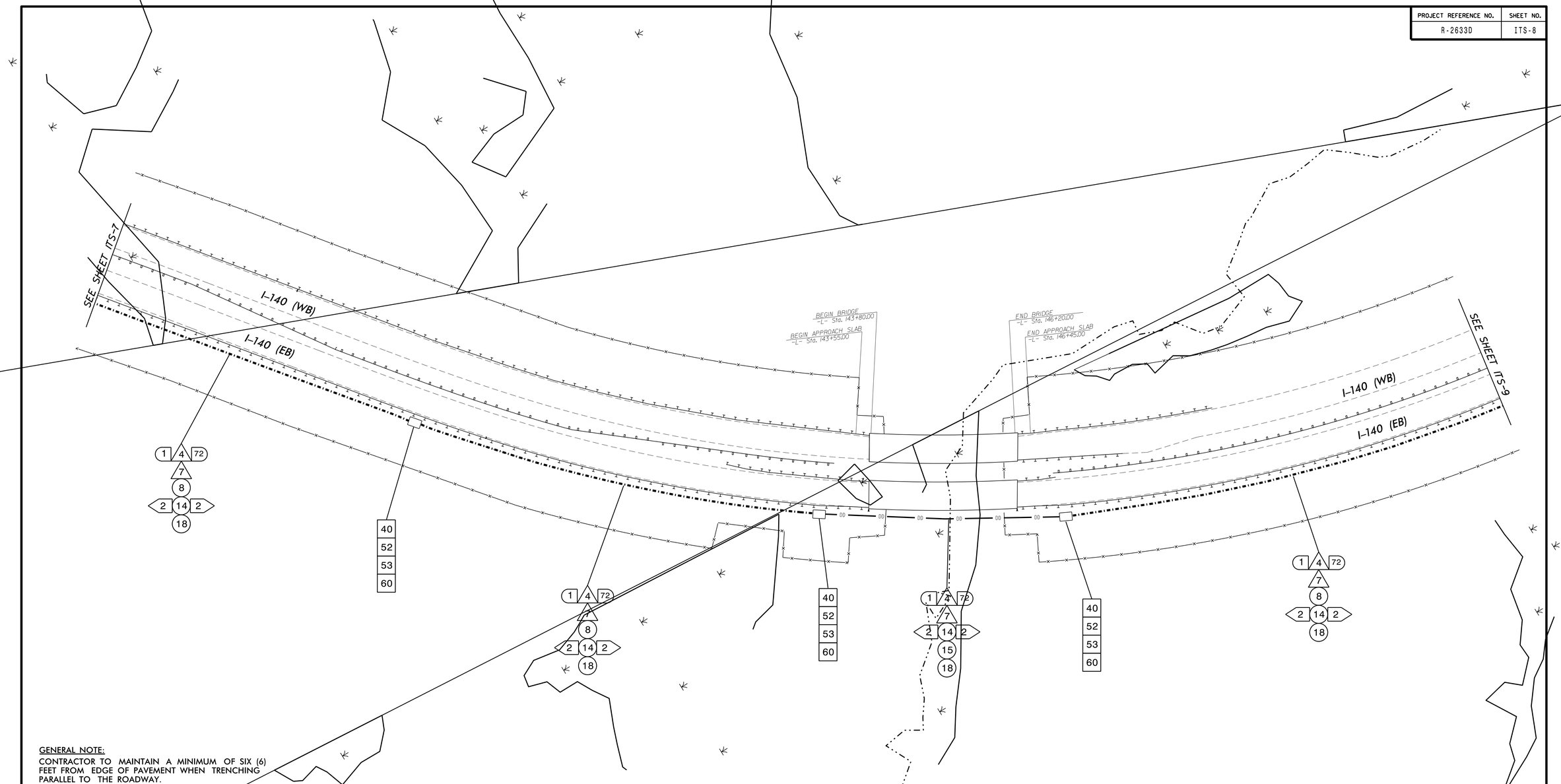

GENERAL NOTE:
CONTRACTOR TO MAINTAIN A MINIMUM OF SIX (6) FEET FROM EDGE OF PAVEMENT WHEN TRENCHING PARALLEL TO THE ROADWAY.

1. INSTALL REA, PE – 22, SHIELDED, TWISTED PAIR COMMUNICATIONS CABLE
2. INSTALL REA, PE – 38, (FIGURE – 8) SHIELDED, TWISTED PAIR COMMUNICATIONS CABLE
3. INSTALL 3-CONDUCTOR, CLASS B, STRANDED UNDERGROUND POWER CABLE
4. INSTALL SMFO CABLE
5. INSTALL CAT 5e COMMUNICATIONS CABLE
6. INSTALL FIBER OPTIC DROP CABLE
7. INSTALL TRACER WIRE
8. TRENCH
9. INSTALL PVC CONDUIT
10. INSTALL RIGID, GALVANIZED STEEL CONDUIT
11. INSTALL RIGID, GALVANIZED STEEL RISER WITH WEATHERHEAD
12. INSTALL RIGID, GALVANIZED STEEL RISER WITH FIBER OPTIC CABLE SEAL
13. INSTALL OUTER-DUCT POLYETHYLENE CONDUIT
14. INSTALL POLYETHYLENE CONDUIT
15. DIRECTIONAL DRILL CONDUIT
16. INSTALL BRIDGE MOUNTED FIBERGLASS CONDUIT, WITH FOUR-WAY INNERDUCT INSERT
17. INSTALL CABLE(S) IN EXISTING CONDUIT
18. INSTALL CABLE(S) IN NEW CONDUIT
19. INSTALL CABLE(S) IN EXISTING RISER
20. INSTALL CABLE(S) IN NEW RISER
21. INSTALL CABLE(S) IN EXISTING CONDUIT STUBOUTS
22. INSTALL NEW CONDUIT INTO EXISTING CABINET BASE (USE EXISTING CONDUIT STUB-OUTS WHEN AVAILABLE)
23. INSTALL NEW RISER INTO EXISTING CABINET BASE (USE EXISTING CONDUIT STUB-OUTS WHEN AVAILABLE)
24. INSTALL NEW CONDUIT INTO EXISTING POLE MOUNTED CABINET
25. INSTALL NEW RISER INTO EXISTING POLE MOUNTED CABINET
26. TERMINATE COMMUNICATIONS CABLE ON EXISTING TELEMETRY INTERFACE PANEL IN TRAFFIC SIGNAL CONTROLLER CABINET
27. INSTALL NEW TELEMETRY INTERFACE PANEL IN TRAFFIC SIGNAL CONTROLLER CABINET
28. INSTALL INTERCONNECT CENTER, PATCH PANEL, JUMPERS, AND FUSION SPLICE CABLE IN CABINET
29. INSTALL UNDERGROUND SPLICE ENCLOSURE
30. INSTALL AERIAL SPLICE ENCLOSURE
31. INSTALL POLE MOUNTED SPLICE CABINET
32. INSTALL BASE MOUNTED SPLICE CABINET (336) WITH EXTEND BASE
33. REMOVE EXISTING SPLICE CABINET
34. INSTALL CABINET FOUNDATION
35. REMOVE EXISTING CABINET FOUNDATION
36. INSTALL CCTV CAMERA ASSEMBLY
37. INSTALL CCTV CAMERA WOOD POLE
38. INSTALL CCTV CAMERA METAL POLE AND FOUNDATION
39. INSTALL SPECIAL OVERSIZED JUNCTION BOX WITH 100 FEET OF COMMUNICATIONS CABLE
40. INSTALL OVERSIZED JUNCTION BOX
41. INSTALL BRIDGE MOUNTED JUNCTION BOX
42. INSTALL WOOD POLE
43. REMOVE EXISTING WOOD POLE
44. INSTALL AERIAL GUY ASSEMBLY
45. INSTALL STANDARD GUY ASSEMBLY
46. INSTALL SIDEWALK GUY ASSEMBLY
47. INSTALL MESSENGER CABLE
48. REMOVE EXISTING COMMUNICATIONS CABLE AND MESSENGER CABLE
49. REMOVE EXISTING COMMUNICATIONS CABLE
50. INSTALL REEL END SPLICE
51. INSTALL CABLE STORAGE RACKS (SNOW SHOES) AND STORE 100 FEET OF CABLE
52. INSTALL DELINEATOR MARKER
53. STORE 50 FEET OF COMMUNICATIONS CABLE
54. LASH CABLE(S) TO EXISTING SIGNAL / COMMUNICATIONS CABLE
55. LASH CABLE(S) TO EXISTING MESSENGER CABLE
56. LASH CABLE(S) TO NEW MESSENGER CABLE
57. MODIFY EXISTING ELECTRICAL SERVICE
58. INSTALL NEW ELECTRICAL SERVICE FOR DMS
59. INSTALL NEW BASE MOUNTED CABINET (336)
60. SEAL ALL CONDUIT ENTERING JUNCTION BOXES AND CABINETS WITH MOLDABLE DUCT SEAL
61. INSTALL ETHERNET SWITCH
62. LOCATE EXISTING JUNCTION BOX AND CONNECT WITH NEW CONDUIT
63. BOND MESSENGER CABLE AND RISER TO POLE GROUND

Prepared for the Offices of:
Transportation Mobility and Safety Division
STATE OF NORTH CAROLINA DEPARTMENT OF TRANSPORTATION
Intermodal Transportation Systems Section
750 N. Greenfield Pkwy., Garner, NC 27529

CABLE ROUTING PLANS

DIV 3 BRUNSWICK CO. Near WILMINGTON

PLAN DATE:	January 2018	REVIEWED BY:	G. Green
PREPARED BY:	L. Neal	REVIEWED BY:	P. Marak

SCALE: NTS

REVISIONS	INIT.	DATE

SEAL
PRELIMINARY PLANS
DO NOT USE FOR CONSTRUCTION
SIGNATURE DATE
CADD FILE NAME

Revised 3/2/2018

PROJECT REFERENCE NO.	SHEET NO.
R-2633D	ITS-9

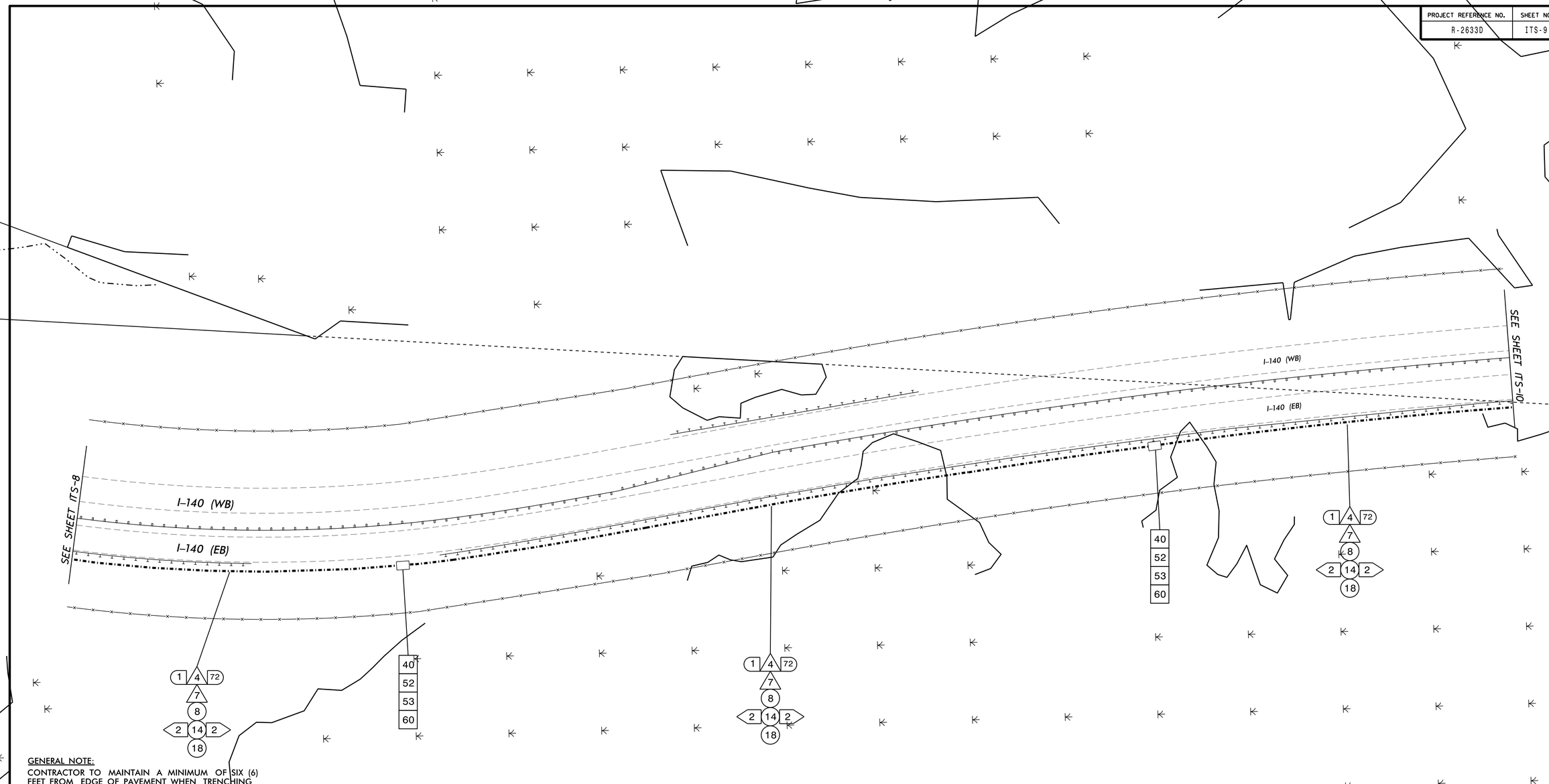

GENERAL NOTE:

CONTRACTOR TO MAINTAIN A MINIMUM OF SIX (6) FEET FROM EDGE OF PAVEMENT WHEN TRENCHING PARALLEL TO THE ROADWAY.

1. INSTALL REA, PE – 22, SHIELDED, TWISTED PAIR COMMUNICATIONS CABLE
2. INSTALL REA, PE – 38, (FIGURE – 8) SHIELDED, TWISTED PAIR COMMUNICATIONS CABLE
3. INSTALL 3-CONDUCTOR, CLASS B, STRANDED, UNDERGROUND POWER CABLE
4. INSTALL SMFO CABLE
5. INSTALL CAT 5e COMMUNICATIONS CABLE
6. INSTALL FIBER OPTIC DROP CABLE
7. INSTALL TRACER WIRE
8. TRENCH
9. INSTALL PVC CONDUIT
10. INSTALL RIGID, GALVANIZED STEEL CONDUIT
11. INSTALL RIGID, GALVANIZED STEEL RISER WITH WEATHERHEAD
12. INSTALL RIGID, GALVANIZED STEEL RISER WITH FIBER OPTIC CABLE SEAL
13. INSTALL OUTER-DUCT POLYETHYLENE CONDUIT
14. INSTALL POLYETHYLENE CONDUIT
15. DIRECTIONAL DRILL CONDUIT
16. INSTALL BRIDGE MOUNTED FIBERGLASS CONDUIT, WITH FOUR-WAY INNERDUCT INSERT
17. INSTALL CABLE(S) IN EXISTING CONDUIT
18. INSTALL CABLE(S) IN NEW CONDUIT
19. INSTALL CABLE(S) IN EXISTING RISER
20. INSTALL CABLE(S) IN NEW RISER
21. INSTALL CABLE(S) IN EXISTING CONDUIT STUBOUTS
22. INSTALL NEW CONDUIT INTO EXISTING CABINET BASE (USE EXISTING CONDUIT STUB-OUTS WHEN AVAILABLE)
23. INSTALL NEW RISER INTO EXISTING CABINET BASE (USE EXISTING CONDUIT STUB-OUTS WHEN AVAILABLE)
24. INSTALL NEW CONDUIT INTO EXISTING POLE MOUNTED CABINET
25. INSTALL NEW RISER INTO EXISTING POLE MOUNTED CABINET
26. TERMINATE COMMUNICATIONS CABLE ON EXISTING TELEMETRY INTERFACE PANEL IN TRAFFIC SIGNAL CONTROLLER CABINET
27. INSTALL NEW TELEMETRY INTERFACE PANEL IN TRAFFIC SIGNAL CONTROLLER CABINET
28. INSTALL INTERCONNECT CENTER, PATCH PANEL, JUMPERS, AND FUSION SPLICE CABLE IN CABINET
29. INSTALL UNDERGROUND SPLICE ENCLOSURE
30. INSTALL AERIAL SPLICE ENCLOSURE
31. INSTALL POLE MOUNTED SPLICE CABINET
32. INSTALL BASE MOUNTED SPLICE CABINET (336) WITH EXTEND BASE
33. REMOVE EXISTING SPLICE CABINET
34. INSTALL CABINET FOUNDATION
35. REMOVE EXISTING CABINET FOUNDATION
36. INSTALL CCTV CAMERA ASSEMBLY
37. INSTALL CCTV CAMERA WOOD POLE
38. INSTALL CCTV CAMERA METAL POLE AND FOUNDATION
39. INSTALL SPECIAL OVERSIZED JUNCTION BOX WITH 100 FEET OF COMMUNICATIONS CABLE
40. INSTALL OVERSIZED JUNCTION BOX
41. INSTALL BRIDGE MOUNTED JUNCTION BOX
42. INSTALL WOOD POLE
43. REMOVE EXISTING WOOD POLE
44. INSTALL AERIAL GUY ASSEMBLY
45. INSTALL STANDARD GUY ASSEMBLY
46. INSTALL SIDEWALK GUY ASSEMBLY
47. INSTALL MESSENGER CABLE
48. REMOVE EXISTING COMMUNICATIONS CABLE AND MESSENGER CABLE
49. REMOVE EXISTING COMMUNICATIONS CABLE
50. INSTALL REEL END SPLICE
51. INSTALL CABLE STORAGE RACKS (SNOW SHOES) AND STORE 100 FEET OF CABLE
52. INSTALL DELINEATOR MARKER
53. STORE 50 FEET OF COMMUNICATIONS CABLE
54. LASH CABLE(S) TO EXISTING SIGNAL / COMMUNICATIONS CABLE
55. LASH CABLE(S) TO EXISTING MESSENGER CABLE
56. LASH CABLE(S) TO NEW MESSENGER CABLE
57. MODIFY EXISTING ELECTRICAL SERVICE
58. INSTALL NEW ELECTRICAL SERVICE FOR DMS
59. INSTALL NEW BASE MOUNTED CABINET (336)
60. SEAL ALL CONDUIT ENTERING JUNCTION BOXES AND CABINETS WITH MOLDABLE DUCT SEAL
61. INSTALL ETHERNET SWITCH
62. LOCATE EXISTING JUNCTION BOX AND CONNECT WITH NEW CONDUIT
63. BOND MESSENGER CABLE AND RISER TO POLE GROUND

Prepared for the Offices of:

Transportation Mobility and Safety Division
STATE OF NORTH CAROLINA
DEPARTMENT OF TRANSPORTATION
Intermodal Transportation & Safety Section

750 N. Greenfield Pkwy., Garner, NC 27529

SCALE: NTS

CABLE ROUTING PLANS

DIV 3 BRUNSWICK CO. Near WILMINGTON

PLAN DATE:	January 2018	REVIEWED BY:	G. Green
PREPARED BY:	L. Neal	REVIEWED BY:	P. Marak

REVISIONS	INIT.	DATE

SEAL

PRELIMINARY PLANS
DO NOT USE FOR CONSTRUCTION

SIGNATURE DATE

CADD FILE NAME

Revised 3/2/2018

PROJECT REFERENCE NO.	SHEET NO.
R-2633D	ITS-10

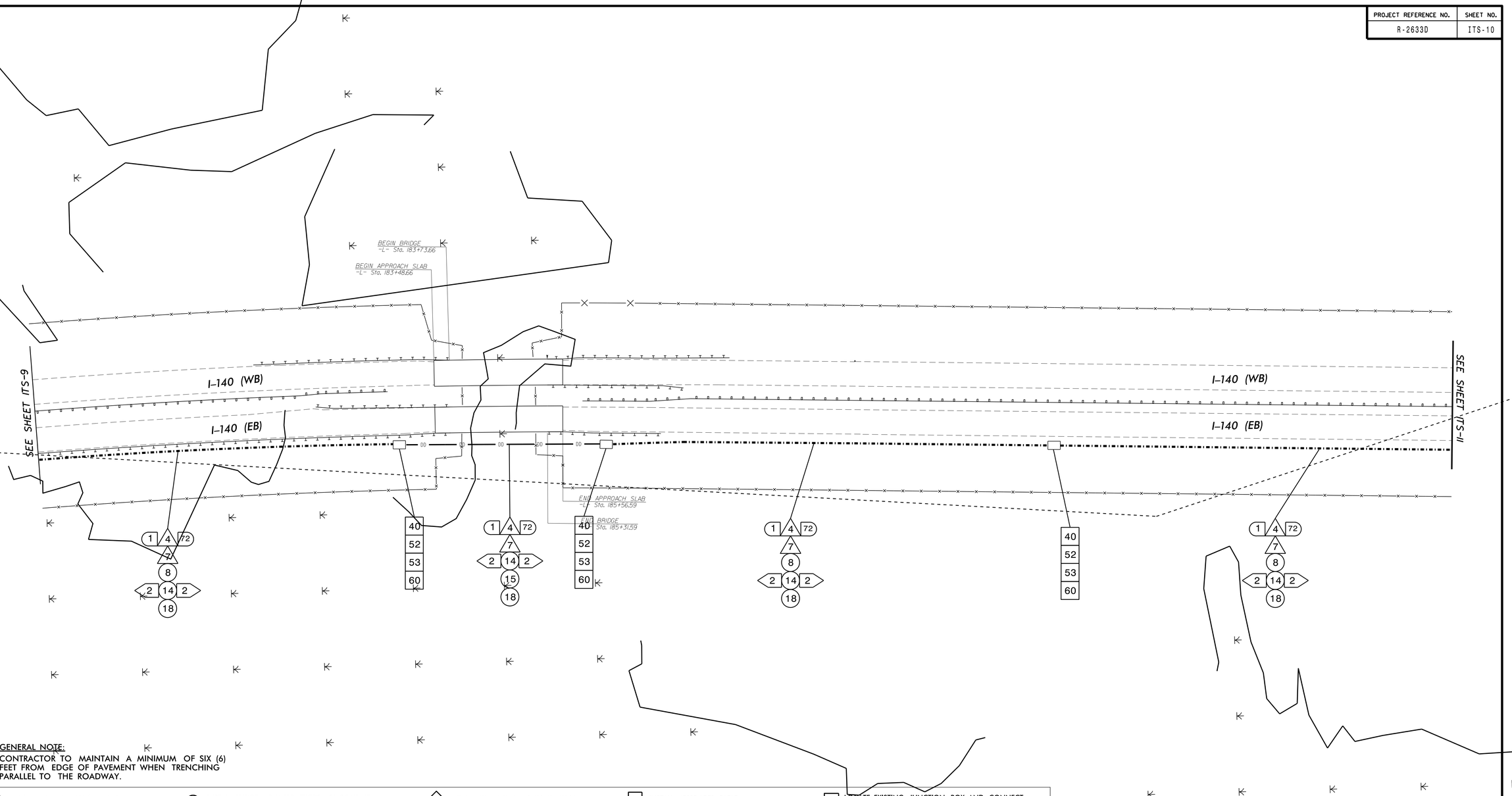

GENERAL NOTE:
CONTRACTOR TO MAINTAIN A MINIMUM OF SIX (6) FEET FROM EDGE OF PAVEMENT WHEN TRENCHING PARALLEL TO THE ROADWAY.

1. INSTALL REA, PE – 22, SHIELDED, TWISTED PAIR COMMUNICATIONS CABLE
2. INSTALL REA, PE – 38, (FIGURE – 8) SHIELDED, TWISTED PAIR COMMUNICATIONS CABLE
3. INSTALL 3-CONDUCTOR, CLASS B, STRANDED UNDERGROUND POWER CABLE
4. INSTALL SMFO CABLE
5. INSTALL CAT 5e COMMUNICATIONS CABLE
6. INSTALL FIBER OPTIC DROP CABLE
7. INSTALL TRACER WIRE
8. TRENCH
9. INSTALL PVC CONDUIT
10. INSTALL RIGID, GALVANIZED STEEL CONDUIT
11. INSTALL RIGID, GALVANIZED STEEL RISER WITH WEATHERHEAD
12. INSTALL RIGID, GALVANIZED STEEL RISER WITH FIBER OPTIC CABLE SEAL
13. INSTALL OUTER-DUCT POLYETHYLENE CONDUIT
14. INSTALL POLYETHYLENE CONDUIT
15. DIRECTIONAL DRILL CONDUIT
16. INSTALL BRIDGE MOUNTED FIBERGLASS CONDUIT, WITH FOUR-WAY INNERDUCT INSERT
17. INSTALL CABLE(S) IN EXISTING CONDUIT
18. INSTALL CABLE(S) IN NEW CONDUIT
19. INSTALL CABLE(S) IN EXISTING RISER
20. INSTALL CABLE(S) IN NEW RISER
21. INSTALL CABLE(S) IN EXISTING CONDUIT STUBOUTS
22. INSTALL NEW CONDUIT INTO EXISTING CABINET BASE (USE EXISTING CONDUIT STUB-OUTS WHEN AVAILABLE)
23. INSTALL NEW RISER INTO EXISTING CABINET BASE (USE EXISTING CONDUIT STUB-OUTS WHEN AVAILABLE)
24. INSTALL NEW CONDUIT INTO EXISTING POLE MOUNTED CABINET
25. INSTALL NEW RISER INTO EXISTING POLE MOUNTED CABINET
26. TERMINATE COMMUNICATIONS CABLE ON EXISTING TELEMETRY INTERFACE PANEL IN TRAFFIC SIGNAL CONTROLLER CABINET
27. INSTALL NEW TELEMETRY INTERFACE PANEL IN TRAFFIC SIGNAL CONTROLLER CABINET
28. INSTALL INTERCONNECT CENTER, PATCH PANEL, JUMPERS, AND FUSION SPLICE CABLE IN CABINET
29. INSTALL UNDERGROUND SPLICE ENCLOSURE
30. INSTALL AERIAL SPLICE ENCLOSURE
31. INSTALL POLE MOUNTED SPLICE CABINET
32. INSTALL BASE MOUNTED SPLICE CABINET (336) WITH EXTEND BASE
33. REMOVE EXISTING SPLICE CABINET
34. INSTALL CABINET FOUNDATION
35. REMOVE EXISTING CABINET FOUNDATION
36. INSTALL CCTV CAMERA ASSEMBLY
37. INSTALL CCTV CAMERA WOOD POLE
38. INSTALL CCTV CAMERA METAL POLE AND FOUNDATION
39. INSTALL SPECIAL OVERSIZED JUNCTION BOX WITH 100 FEET OF COMMUNICATIONS CABLE
40. INSTALL OVERSIZED JUNCTION BOX
41. INSTALL BRIDGE MOUNTED JUNCTION BOX
42. INSTALL WOOD POLE
43. REMOVE EXISTING WOOD POLE
44. INSTALL AERIAL GUY ASSEMBLY
45. INSTALL STANDARD GUY ASSEMBLY
46. INSTALL SIDEWALK GUY ASSEMBLY
47. INSTALL MESSENGER CABLE
48. REMOVE EXISTING COMMUNICATIONS CABLE AND MESSENGER CABLE
49. REMOVE EXISTING COMMUNICATIONS CABLE
50. INSTALL REEL END SPLICE
51. INSTALL CABLE STORAGE RACKS (SNOW SHOES) AND STORE 100 FEET OF CABLE
52. INSTALL DELINEATOR MARKER
53. STORE 50 FEET OF COMMUNICATIONS CABLE
54. LASH CABLE(S) TO EXISTING SIGNAL / COMMUNICATIONS CABLE
55. LASH CABLE(S) TO EXISTING MESSENGER CABLE
56. LASH CABLE(S) TO NEW MESSENGER CABLE
57. MODIFY EXISTING ELECTRICAL SERVICE
58. INSTALL NEW ELECTRICAL SERVICE FOR DMS
59. INSTALL NEW BASE MOUNTED CABINET (336)
60. SEAL ALL CONDUIT ENTERING JUNCTION BOXES AND CABINETS WITH MOLDABLE DUCT SEAL
61. INSTALL ETHERNET SWITCH
62. LOCATE EXISTING JUNCTION BOX AND CONNECT WITH NEW CONDUIT
63. BOND MESSENGER CABLE AND RISER TO POLE GROUND

Prepared for the Offices of:
STATE OF NORTH CAROLINA DEPARTMENT OF TRANSPORTATION
Transportation Mobility and Safety Division
Intelligent Transportation Systems
750 N. Greenfield Pkwy., Garner, NC 27529

CABLE ROUTING PLANS

DIV 3 BRUNSWICK CO. Near WILMINGTON

PLAN DATE:	January 2018	REVIEWED BY:	G. Green
PREPARED BY:	L. Neal	REVIEWED BY:	P. Marak

REVISIONS	INIT.	DATE

SCALE
NTS

SEAL
PRELIMINARY PLANS
DO NOT USE FOR CONSTRUCTION
SIGNATURE DATE
CADD FILE NAME

Revised 3/2/2018

PROJECT REFERENCE NO.	SHEET NO.
R-2633D	ITS-11

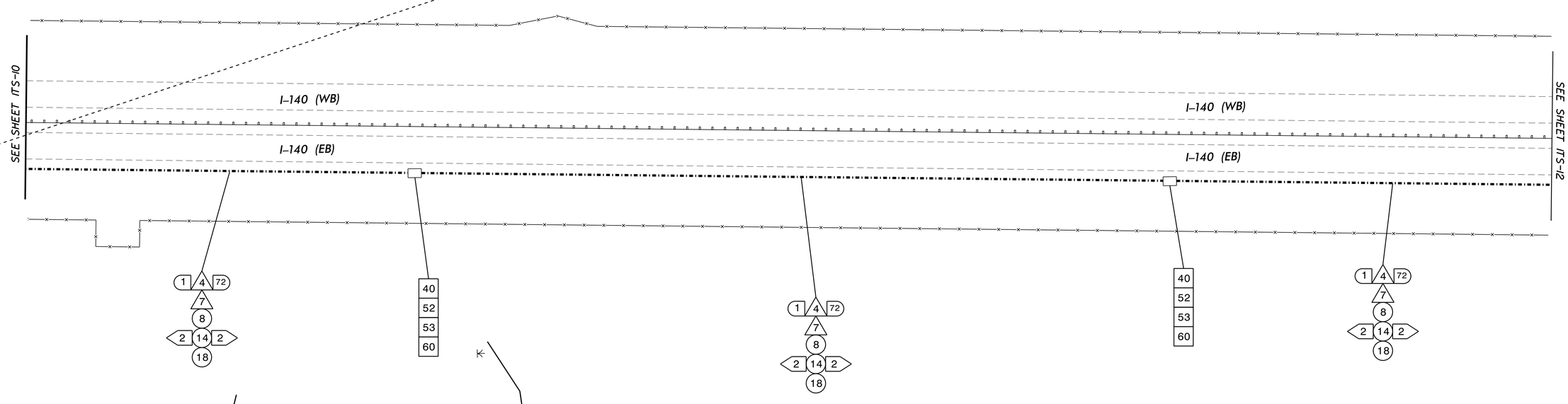

GENERAL NOTE:
CONTRACTOR TO MAINTAIN A MINIMUM OF SIX (6) FEET FROM EDGE OF PAVEMENT WHEN TRENCHING PARALLEL TO THE ROADWAY.

1. INSTALL REA, PE – 22, SHIELDED, TWISTED PAIR COMMUNICATIONS CABLE
2. INSTALL REA, PE – 38, (FIGURE – 8) SHIELDED, TWISTED PAIR COMMUNICATIONS CABLE
3. INSTALL 3-CONDUCTOR, CLASS B, STRANDED UNDERGROUND POWER CABLE
4. INSTALL SMFO CABLE
5. INSTALL CAT 5e COMMUNICATIONS CABLE
6. INSTALL FIBER OPTIC DROP CABLE
7. INSTALL TRACER WIRE
8. TRENCH
9. INSTALL PVC CONDUIT
10. INSTALL RIGID, GALVANIZED STEEL CONDUIT
11. INSTALL RIGID, GALVANIZED STEEL RISER WITH WEATHERHEAD
12. INSTALL RIGID, GALVANIZED STEEL RISER WITH FIBER OPTIC CABLE SEAL
13. INSTALL OUTER-DUCT POLYETHYLENE CONDUIT
14. INSTALL POLYETHYLENE CONDUIT
15. DIRECTIONAL DRILL CONDUIT
16. INSTALL BRIDGE MOUNTED FIBERGLASS CONDUIT, WITH FOUR-WAY INNERDUCT INSERT
17. INSTALL CABLE(S) IN EXISTING CONDUIT
18. INSTALL CABLE(S) IN NEW CONDUIT
19. INSTALL CABLE(S) IN EXISTING RISER
20. INSTALL CABLE(S) IN NEW RISER
21. INSTALL CABLE(S) IN EXISTING CONDUIT STUBOUTS
22. INSTALL NEW CONDUIT INTO EXISTING CABINET BASE (USE EXISTING CONDUIT STUB-OUTS WHEN AVAILABLE)
23. INSTALL NEW RISER INTO EXISTING CABINET BASE (USE EXISTING CONDUIT STUB-OUTS WHEN AVAILABLE)
24. INSTALL NEW CONDUIT INTO EXISTING POLE MOUNTED CABINET
25. INSTALL NEW RISER INTO EXISTING POLE MOUNTED CABINET
26. TERMINATE COMMUNICATIONS CABLE ON EXISTING TELEMETRY INTERFACE PANEL IN TRAFFIC SIGNAL CONTROLLER CABINET
27. INSTALL NEW TELEMETRY INTERFACE PANEL IN TRAFFIC SIGNAL CONTROLLER CABINET
28. INSTALL INTERCONNECT CENTER, PATCH PANEL, JUMPERS, AND FUSION SPLICE CABLE IN CABINET
29. INSTALL UNDERGROUND SPLICE ENCLOSURE
30. INSTALL AERIAL SPLICE ENCLOSURE
31. INSTALL POLE MOUNTED SPLICE CABINET
32. INSTALL BASE MOUNTED SPLICE CABINET (336) WITH EXTEND BASE
33. REMOVE EXISTING SPLICE CABINET
34. INSTALL CABINET FOUNDATION
35. REMOVE EXISTING CABINET FOUNDATION
36. INSTALL CCTV CAMERA ASSEMBLY
37. INSTALL CCTV CAMERA WOOD POLE
38. INSTALL CCTV CAMERA METAL POLE AND FOUNDATION
39. INSTALL SPECIAL OVERSIZED JUNCTION BOX WITH 100 FEET OF COMMUNICATIONS CABLE
40. INSTALL OVERSIZED JUNCTION BOX
41. INSTALL BRIDGE MOUNTED JUNCTION BOX
42. INSTALL WOOD POLE
43. REMOVE EXISTING WOOD POLE
44. INSTALL AERIAL GUY ASSEMBLY
45. INSTALL STANDARD GUY ASSEMBLY
46. INSTALL SIDEWALK GUY ASSEMBLY
47. INSTALL MESSENGER CABLE
48. REMOVE EXISTING COMMUNICATIONS CABLE AND MESSENGER CABLE
49. REMOVE EXISTING COMMUNICATIONS CABLE
50. INSTALL REEL END SPLICE
51. INSTALL CABLE STORAGE RACKS (SNOW SHOES) AND STORE 100 FEET OF CABLE
52. INSTALL DELINEATOR MARKER
53. STORE 50 FEET OF COMMUNICATIONS CABLE
54. LASH CABLE(S) TO EXISTING SIGNAL / COMMUNICATIONS CABLE
55. LASH CABLE(S) TO EXISTING MESSENGER CABLE
56. LASH CABLE(S) TO NEW MESSENGER CABLE
57. MODIFY EXISTING ELECTRICAL SERVICE
58. INSTALL NEW ELECTRICAL SERVICE FOR DMS
59. INSTALL NEW BASE MOUNTED CABINET (336)
60. SEAL ALL CONDUIT ENTERING JUNCTION BOXES AND CABINETS WITH MOLDABLE DUCT SEAL
61. INSTALL ETHERNET SWITCH
62. LOCATE EXISTING JUNCTION BOX AND CONNECT WITH NEW CONDUIT
63. BOND MESSENGER CABLE AND RISER TO POLE GROUND

Prepared for the Offices of:
Transportation Mobility and Safety Division
STATE OF NORTH CAROLINA DEPARTMENT OF TRANSPORTATION
Intermodal Transportation Systems Section
750 N. Greenfield Pkwy., Garner, NC 27529

CABLE ROUTING PLANS

DIV 3 BRUNSWICK CO. Near WILMINGTON

PLAN DATE:	January 2018	REVIEWED BY:	G. Green
PREPARED BY:	L. Neal	REVIEWED BY:	P. Marak

SCALE: NTS

REVISIONS	INIT.	DATE

SEAL
PRELIMINARY PLANS
DO NOT USE FOR CONSTRUCTION

SIGNATURE DATE
CADD FILE NAME

Revised 3/2/2018

PROJECT REFERENCE NO.	SHEET NO.
R-2633D	ITS-12

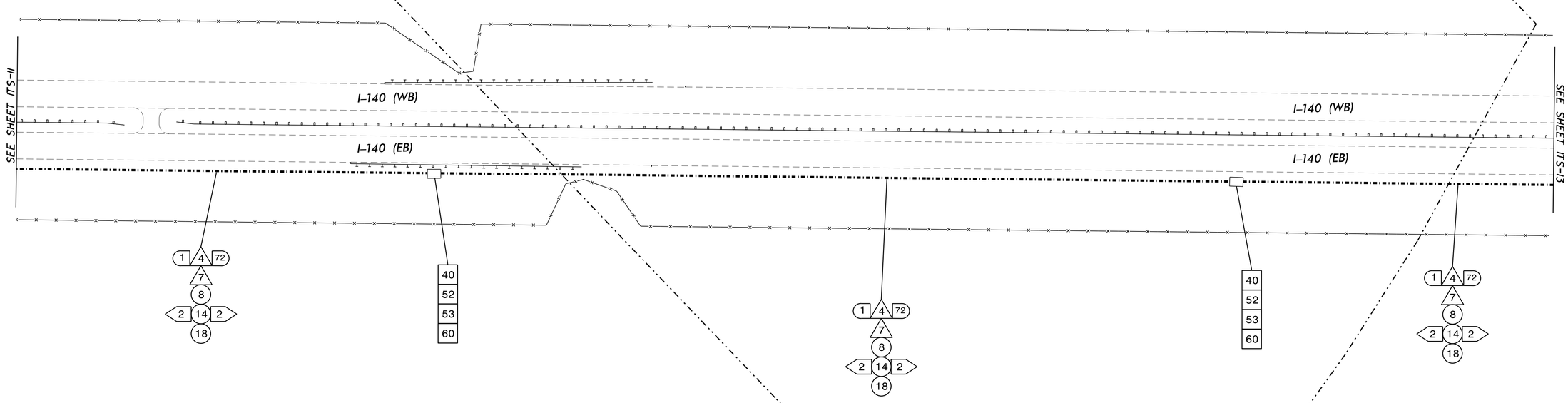

GENERAL NOTE:

CONTRACTOR TO MAINTAIN A MINIMUM OF SIX (6) FEET FROM EDGE OF PAVEMENT WHEN TRENCHING PARALLEL TO THE ROADWAY.

1. INSTALL REA, PE – 22, SHIELDED, TWISTED PAIR COMMUNICATIONS CABLE
2. INSTALL REA, PE – 38, (FIGURE – 8) SHIELDED, TWISTED PAIR COMMUNICATIONS CABLE
3. INSTALL 3–CONDUCTOR, CLASS B, STRANDED UNDERGROUND POWER CABLE
4. INSTALL SMFO CABLE
5. INSTALL CAT 5e COMMUNICATIONS CABLE
6. INSTALL FIBER OPTIC DROP CABLE
7. INSTALL TRACER WIRE
8. TRENCH
9. INSTALL PVC CONDUIT
10. INSTALL RIGID, GALVANIZED STEEL CONDUIT
11. INSTALL RIGID, GALVANIZED STEEL RISER WITH WEATHERHEAD
12. INSTALL RIGID, GALVANIZED STEEL RISER WITH FIBER OPTIC CABLE SEAL
13. INSTALL OUTER–DUCT POLYETHYLENE CONDUIT
14. INSTALL POLYETHYLENE CONDUIT
15. DIRECTIONAL DRILL CONDUIT
16. INSTALL BRIDGE MOUNTED FIBERGLASS CONDUIT, WITH FOUR–WAY INNERDUCT INSERT
17. INSTALL CABLE(S) IN EXISTING CONDUIT
18. INSTALL CABLE(S) IN NEW CONDUIT
19. INSTALL CABLE(S) IN EXISTING RISER
20. INSTALL CABLE(S) IN NEW RISER
21. INSTALL CABLE(S) IN EXISTING CONDUIT STUBOUTS
22. INSTALL NEW CONDUIT INTO EXISTING CABINET BASE (USE EXISTING CONDUIT STUB–OUTS WHEN AVAILABLE)
23. INSTALL NEW RISER INTO EXISTING CABINET BASE (USE EXISTING CONDUIT STUB–OUTS WHEN AVAILABLE)
24. INSTALL NEW CONDUIT INTO EXISTING POLE MOUNTED CABINET
25. INSTALL NEW RISER INTO EXISTING POLE MOUNTED CABINET
26. TERMINATE COMMUNICATIONS CABLE ON EXISTING TELEMETRY INTERFACE PANEL IN TRAFFIC SIGNAL CONTROLLER CABINET
27. INSTALL NEW TELEMETRY INTERFACE PANEL IN TRAFFIC SIGNAL CONTROLLER CABINET
28. INSTALL INTERCONNECT CENTER, PATCH PANEL, JUMPERS, AND FUSION SPLICE CABLE IN CABINET
29. INSTALL UNDERGROUND SPLICE ENCLOSURE
30. INSTALL AERIAL SPLICE ENCLOSURE
31. INSTALL POLE MOUNTED SPLICE CABINET
32. INSTALL BASE MOUNTED SPLICE CABINET (336) WITH EXTEND BASE
33. REMOVE EXISTING SPLICE CABINET
34. INSTALL CABINET FOUNDATION
35. REMOVE EXISTING CABINET FOUNDATION
36. INSTALL CCTV CAMERA ASSEMBLY
37. INSTALL CCTV CAMERA WOOD POLE
38. INSTALL CCTV CAMERA METAL POLE AND FOUNDATION
39. INSTALL SPECIAL OVERSIZED JUNCTION BOX WITH 100 FEET OF COMMUNICATIONS CABLE
40. INSTALL OVERSIZED JUNCTION BOX
41. INSTALL BRIDGE MOUNTED JUNCTION BOX
42. INSTALL WOOD POLE
43. REMOVE EXISTING WOOD POLE
44. INSTALL AERIAL GUY ASSEMBLY
45. INSTALL STANDARD GUY ASSEMBLY
46. INSTALL SIDEWALK GUY ASSEMBLY
47. INSTALL MESSENGER CABLE
48. REMOVE EXISTING COMMUNICATIONS CABLE AND MESSENGER CABLE
49. REMOVE EXISTING COMMUNICATIONS CABLE
50. INSTALL REEL END SPLICE
51. INSTALL CABLE STORAGE RACKS (SNOW SHOES) AND STORE 100 FEET OF CABLE
52. INSTALL DELINEATOR MARKER
53. STORE 50 FEET OF COMMUNICATIONS CABLE
54. LASH CABLE(S) TO EXISTING SIGNAL / COMMUNICATIONS CABLE
55. LASH CABLE(S) TO EXISTING MESSENGER CABLE
56. LASH CABLE(S) TO NEW MESSENGER CABLE
57. MODIFY EXISTING ELECTRICAL SERVICE
58. INSTALL NEW ELECTRICAL SERVICE FOR DMS
59. INSTALL NEW BASE MOUNTED CABINET (336)
60. SEAL ALL CONDUIT ENTERING JUNCTION BOXES AND CABINETS WITH MOLDABLE DUCT SEAL
61. INSTALL ETHERNET SWITCH
62. LOCATE EXISTING JUNCTION BOX AND CONNECT WITH NEW CONDUIT
63. BOND MESSENGER CABLE AND RISER TO POLE GROUND

Prepared for the Offices of:

Transportation Mobility and Safety Division
STATE OF NORTH CAROLINA DEPARTMENT OF TRANSPORTATION
Intelligent Transportation Systems Branch

750 N. Greenfield Pkwy., Garner, NC 27529

SCALE: NTS

CABLE ROUTING PLANS

DIV 3 BRUNSWICK CO. Near WILMINGTON

PLAN DATE:	January 2018	REVIEWED BY:	G. Green
PREPARED BY:	L. Neal	REVIEWED BY:	P. Marak

REVISIONS	INIT.	DATE

SEAL

PRELIMINARY PLANS
DO NOT USE FOR CONSTRUCTION

SIGNATURE DATE

CADD FILE NAME

Revised 3/2/2018

PROJECT REFERENCE NO.	SHEET NO.
R-2633D	ITS-13

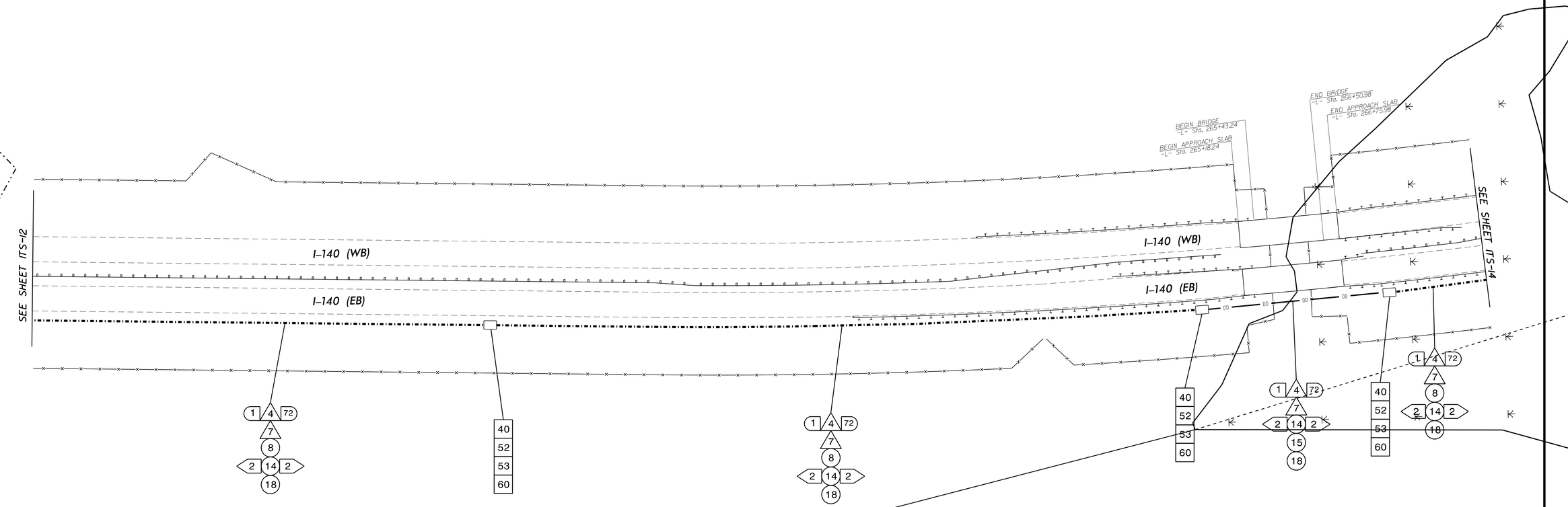

GENERAL NOTE:

CONTRACTOR TO MAINTAIN A MINIMUM OF SIX (6) FEET FROM EDGE OF PAVEMENT WHEN TRENCHING PARALLEL TO THE ROADWAY.

1. INSTALL REA, PE – 22, SHIELDED, TWISTED PAIR COMMUNICATIONS CABLE
2. INSTALL REA, PE – 38, (FIGURE – 8) SHIELDED, TWISTED PAIR COMMUNICATIONS CABLE
3. INSTALL 3-CONDUCTOR, CLASS B, STRANDED UNDERGROUND POWER CABLE
4. INSTALL SMFO CABLE
5. INSTALL CAT 5e COMMUNICATIONS CABLE
6. INSTALL FIBER OPTIC DROP CABLE
7. INSTALL TRACER WIRE
8. TRENCH
9. INSTALL PVC CONDUIT
10. INSTALL RIGID, GALVANIZED STEEL CONDUIT
11. INSTALL RIGID, GALVANIZED STEEL RISER WITH WEATHERHEAD
12. INSTALL RIGID, GALVANIZED STEEL RISER WITH FIBER OPTIC CABLE SEAL
13. INSTALL OUTER-DUCT POLYETHYLENE CONDUIT
14. INSTALL POLYETHYLENE CONDUIT
15. DIRECTIONAL DRILL CONDUIT
16. INSTALL BRIDGE MOUNTED FIBERGLASS CONDUIT, WITH FOUR-WAY INNERDUCT INSERT
17. INSTALL CABLE(S) IN EXISTING CONDUIT
18. INSTALL CABLE(S) IN NEW CONDUIT
19. INSTALL CABLE(S) IN EXISTING RISER
20. INSTALL CABLE(S) IN NEW RISER
21. INSTALL CABLE(S) IN EXISTING CONDUIT STUBOUTS
22. INSTALL NEW CONDUIT INTO EXISTING CABINET BASE (USE EXISTING CONDUIT STUB-OUTS WHEN AVAILABLE)
23. INSTALL NEW RISER INTO EXISTING CABINET BASE (USE EXISTING CONDUIT STUB-OUTS WHEN AVAILABLE)
24. INSTALL NEW CONDUIT INTO EXISTING POLE MOUNTED CABINET
25. INSTALL NEW RISER INTO EXISTING POLE MOUNTED CABINET
26. TERMINATE COMMUNICATIONS CABLE ON EXISTING TELEMETRY INTERFACE PANEL IN TRAFFIC SIGNAL CONTROLLER CABINET
27. INSTALL NEW TELEMETRY INTERFACE PANEL IN TRAFFIC SIGNAL CONTROLLER CABINET
28. INSTALL INTERCONNECT CENTER, PATCH PANEL, JUMPERS, AND FUSION SPLICE CABLE IN CABINET
29. INSTALL UNDERGROUND SPLICE ENCLOSURE
30. INSTALL AERIAL SPLICE ENCLOSURE
31. INSTALL POLE MOUNTED SPLICE CABINET
32. INSTALL BASE MOUNTED SPLICE CABINET (336) WITH EXTEND BASE
33. REMOVE EXISTING SPLICE CABINET
34. INSTALL CABINET FOUNDATION
35. REMOVE EXISTING CABINET FOUNDATION
36. INSTALL CCTV CAMERA ASSEMBLY
37. INSTALL CCTV CAMERA WOOD POLE
38. INSTALL CCTV CAMERA METAL POLE AND FOUNDATION
39. INSTALL SPECIAL OVERSIZED JUNCTION BOX WITH 100 FEET OF COMMUNICATIONS CABLE
40. INSTALL OVERSIZED JUNCTION BOX
41. INSTALL BRIDGE MOUNTED JUNCTION BOX
42. INSTALL WOOD POLE
43. REMOVE EXISTING WOOD POLE
44. INSTALL AERIAL GUY ASSEMBLY
45. INSTALL STANDARD GUY ASSEMBLY
46. INSTALL SIDEWALK GUY ASSEMBLY
47. INSTALL MESSENGER CABLE
48. REMOVE EXISTING COMMUNICATIONS CABLE AND MESSENGER CABLE
49. REMOVE EXISTING COMMUNICATIONS CABLE
50. INSTALL REEL END SPLICE
51. INSTALL CABLE STORAGE RACKS (SNOW SHOES) AND STORE 100 FEET OF CABLE
52. INSTALL DELINEATOR MARKER
53. STORE 50 FEET OF COMMUNICATIONS CABLE
54. LASH CABLE(S) TO EXISTING SIGNAL / COMMUNICATIONS CABLE
55. LASH CABLE(S) TO EXISTING MESSENGER CABLE
56. LASH CABLE(S) TO NEW MESSENGER CABLE
57. MODIFY EXISTING ELECTRICAL SERVICE
58. INSTALL NEW ELECTRICAL SERVICE FOR DMS
59. INSTALL NEW BASE MOUNTED CABINET (336)
60. SEAL ALL CONDUIT ENTERING JUNCTION BOXES AND CABINETS WITH MOLDABLE DUCT SEAL
61. INSTALL ETHERNET SWITCH
62. LOCATE EXISTING JUNCTION BOX AND CONNECT WITH NEW CONDUIT
63. BOND MESSENGER CABLE AND RISER TO POLE GROUND

Prepared for the Offices of:

STATE OF NORTH CAROLINA DEPARTMENT OF TRANSPORTATION
Transportation Mobility and Safety Division
Intermodal Transportation & Mobility Section

750 N. Greenfield Pkwy., Garner, NC 27529

CABLE ROUTING PLANS

DIV 3 BRUNSWICK CO. Near WILMINGTON

PLAN DATE:	January 2018	REVIEWED BY:	G. Green
PREPARED BY:	L. Neal	REVIEWED BY:	P. Marak

SCALE: NTS

REVISIONS	INIT.	DATE

SEAL

PRELIMINARY PLANS
DO NOT USE FOR CONSTRUCTION

SIGNATURE DATE

CADD FILE NAME

Revised 3/2/2018

PROJECT REFERENCE NO.	SHEET NO.
R-2633D	ITS-14

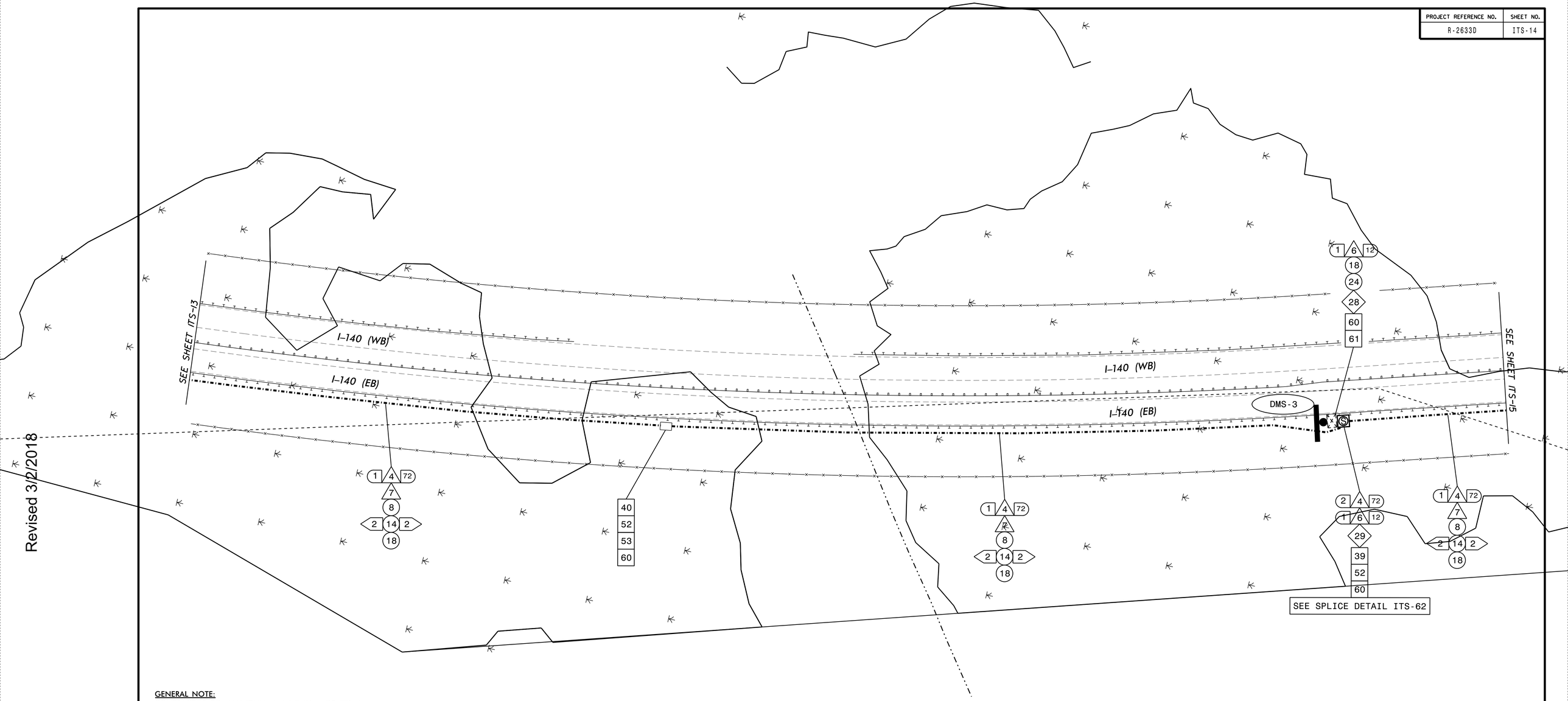

Revised 3/2/2018

GENERAL NOTE:

CONTRACTOR TO MAINTAIN A MINIMUM OF SIX (6) FEET FROM EDGE OF PAVEMENT WHEN TRENCHING PARALLEL TO THE ROADWAY.

1. INSTALL REA, PE – 22, SHIELDED, TWISTED PAIR COMMUNICATIONS CABLE
2. INSTALL REA, PE – 38, (FIGURE – 8) SHIELDED, TWISTED PAIR COMMUNICATIONS CABLE
3. INSTALL 3-CONDUCTOR, CLASS B, STRANDED UNDERGROUND POWER CABLE
4. INSTALL SMFO CABLE
5. INSTALL CAT 5e COMMUNICATIONS CABLE
6. INSTALL FIBER OPTIC DROP CABLE
7. INSTALL TRACER WIRE
8. TRENCH
9. INSTALL PVC CONDUIT
10. INSTALL RIGID, GALVANIZED STEEL CONDUIT
11. INSTALL RIGID, GALVANIZED STEEL RISER WITH WEATHERHEAD
12. INSTALL RIGID, GALVANIZED STEEL RISER WITH FIBER OPTIC CABLE SEAL
13. INSTALL OUTER-DUCT POLYETHYLENE CONDUIT
14. INSTALL POLYETHYLENE CONDUIT
15. DIRECTIONAL DRILL CONDUIT
16. INSTALL BRIDGE MOUNTED FIBERGLASS CONDUIT, WITH FOUR-WAY INNERDUCT INSERT
17. INSTALL CABLE(S) IN EXISTING CONDUIT
18. INSTALL CABLE(S) IN NEW CONDUIT
19. INSTALL CABLE(S) IN EXISTING RISER
20. INSTALL CABLE(S) IN NEW RISER
21. INSTALL CABLE(S) IN EXISTING CONDUIT STUBOUTS
22. INSTALL NEW CONDUIT INTO EXISTING CABINET BASE (USE EXISTING CONDUIT STUB-OUTS WHEN AVAILABLE)
23. INSTALL NEW RISER INTO EXISTING CABINET BASE (USE EXISTING CONDUIT STUB-OUTS WHEN AVAILABLE)
24. INSTALL NEW CONDUIT INTO EXISTING POLE MOUNTED CABINET
25. INSTALL NEW RISER INTO EXISTING POLE MOUNTED CABINET
26. TERMINATE COMMUNICATIONS CABLE ON EXISTING TELEMETRY INTERFACE PANEL IN TRAFFIC SIGNAL CONTROLLER CABINET
27. INSTALL NEW TELEMETRY INTERFACE PANEL IN TRAFFIC SIGNAL CONTROLLER CABINET
28. INSTALL INTERCONNECT CENTER, PATCH PANEL, JUMPERS, AND FUSION SPLICE CABLE IN CABINET
29. INSTALL UNDERGROUND SPLICE ENCLOSURE
30. INSTALL AERIAL SPLICE ENCLOSURE
31. INSTALL POLE MOUNTED SPLICE CABINET
32. INSTALL BASE MOUNTED SPLICE CABINET (336) WITH EXTEND BASE
33. REMOVE EXISTING SPLICE CABINET
34. INSTALL CABINET FOUNDATION
35. REMOVE EXISTING CABINET FOUNDATION
36. INSTALL CCTV CAMERA ASSEMBLY
37. INSTALL CCTV CAMERA WOOD POLE
38. INSTALL CCTV CAMERA METAL POLE AND FOUNDATION
39. INSTALL SPECIAL OVERSIZED JUNCTION BOX WITH 100 FEET OF COMMUNICATIONS CABLE
40. INSTALL OVERSIZED JUNCTION BOX
41. INSTALL BRIDGE MOUNTED JUNCTION BOX
42. INSTALL WOOD POLE
43. REMOVE EXISTING WOOD POLE
44. INSTALL AERIAL GUY ASSEMBLY
45. INSTALL STANDARD GUY ASSEMBLY
46. INSTALL SIDEWALK GUY ASSEMBLY
47. INSTALL MESSENGER CABLE
48. REMOVE EXISTING COMMUNICATIONS CABLE AND MESSENGER CABLE
49. REMOVE EXISTING COMMUNICATIONS CABLE
50. INSTALL REEL END SPLICE
51. INSTALL CABLE STORAGE RACKS (SNOW SHOES) AND STORE 100 FEET OF CABLE
52. INSTALL DELINEATOR MARKER
53. STORE 50 FEET OF COMMUNICATIONS CABLE
54. LASH CABLE(S) TO EXISTING SIGNAL / COMMUNICATIONS CABLE
55. LASH CABLE(S) TO EXISTING MESSENGER CABLE
56. LASH CABLE(S) TO NEW MESSENGER CABLE
57. MODIFY EXISTING ELECTRICAL SERVICE
58. INSTALL NEW ELECTRICAL SERVICE FOR DMS
59. INSTALL NEW BASE MOUNTED CABINET (336)
60. SEAL ALL CONDUIT ENTERING JUNCTION BOXES AND CABINETS WITH MOLDABLE DUCT SEAL
61. INSTALL ETHERNET SWITCH
62. LOCATE EXISTING JUNCTION BOX AND CONNECT WITH NEW CONDUIT
63. BOND MESSENGER CABLE AND RISER TO POLE GROUND

Prepared for the Offices of:

Transportation Mobility and Safety Division
STATE OF NORTH CAROLINA DEPARTMENT OF TRANSPORTATION
Intermodal Transportation Section

750 N. Greenfield Pkwy., Garner, NC 27529

CABLE ROUTING PLANS

DIV 3 BRUNSWICK CO. Near WILMINGTON

PLAN DATE:	January 2018	REVIEWED BY:	G. Green
PREPARED BY:	L. Neal	REVIEWED BY:	P. Marak

SCALE: NTS

REVISIONS	INIT.	DATE

SEAL

PRELIMINARY PLANS
DO NOT USE FOR CONSTRUCTION

SIGNATURE DATE

CADD FILE NAME

PROJECT REFERENCE NO.	SHEET NO.
R-2633D	ITS-15

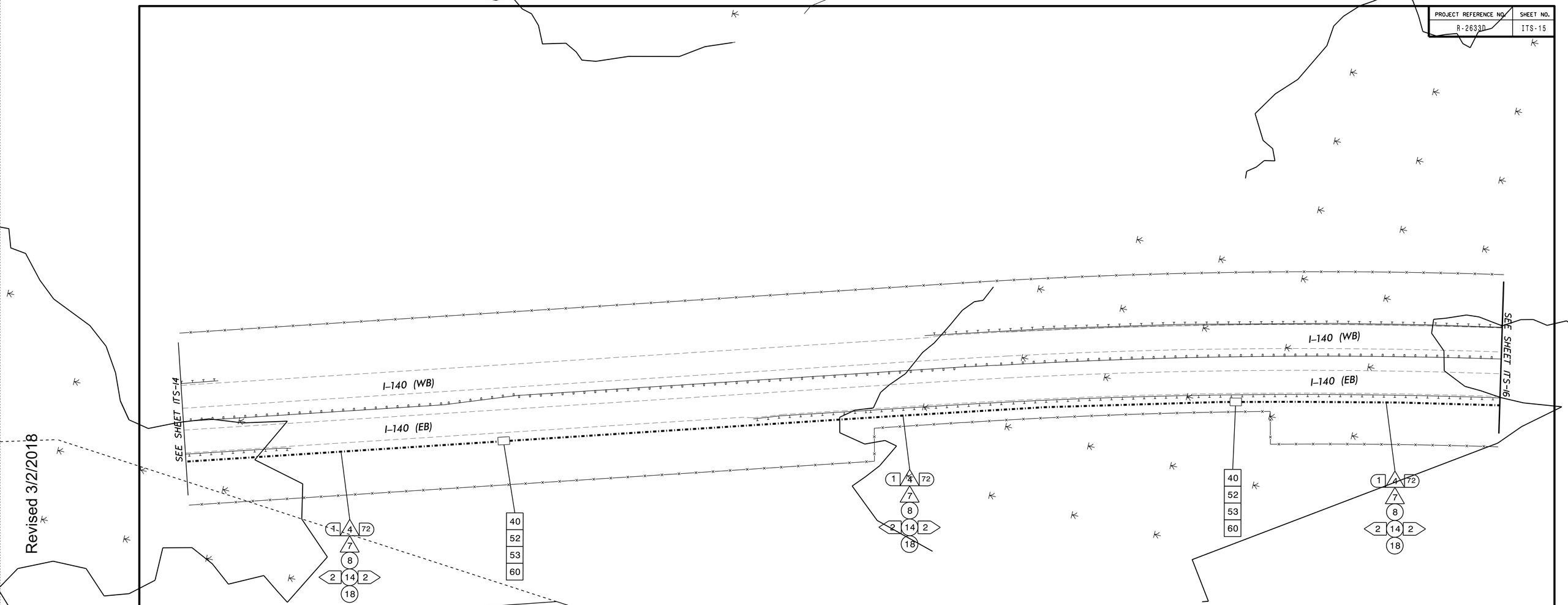

Revised 3/2/2018

GENERAL NOTE:

CONTRACTOR TO MAINTAIN A MINIMUM OF SIX (6) FEET FROM EDGE OF PAVEMENT WHEN TRENCHING PARALLEL TO THE ROADWAY.

1. INSTALL REA, PE – 22, SHIELDED, TWISTED PAIR COMMUNICATIONS CABLE
2. INSTALL REA, PE – 38, (FIGURE – 8) SHIELDED, TWISTED PAIR COMMUNICATIONS CABLE
3. INSTALL 3–CONDUCTOR, CLASS B, STRANDED UNDERGROUND POWER CABLE
4. INSTALL SMFO CABLE
5. INSTALL CAT 5e COMMUNICATIONS CABLE
6. INSTALL FIBER OPTIC DROP CABLE
7. INSTALL TRACER WIRE
8. TRENCH
9. INSTALL PVC CONDUIT
10. INSTALL RIGID, GALVANIZED STEEL CONDUIT
11. INSTALL RIGID, GALVANIZED STEEL RISER WITH WEATHERHEAD
12. INSTALL RIGID, GALVANIZED STEEL RISER WITH FIBER OPTIC CABLE SEAL
13. INSTALL OUTER–DUCT POLYETHYLENE CONDUIT
14. INSTALL POLYETHYLENE CONDUIT
15. DIRECTIONAL DRILL CONDUIT
16. INSTALL BRIDGE MOUNTED FIBERGLASS CONDUIT, WITH FOUR–WAY INNERDUCT INSERT
17. INSTALL CABLE(S) IN EXISTING CONDUIT
18. INSTALL CABLE(S) IN NEW CONDUIT
19. INSTALL CABLE(S) IN EXISTING RISER
20. INSTALL CABLE(S) IN NEW RISER
21. INSTALL CABLE(S) IN EXISTING CONDUIT STUBOUTS
22. INSTALL NEW CONDUIT INTO EXISTING CABINET BASE (USE EXISTING CONDUIT STUB–OUTS WHEN AVAILABLE)
23. INSTALL NEW RISER INTO EXISTING CABINET BASE (USE EXISTING CONDUIT STUB–OUTS WHEN AVAILABLE)
24. INSTALL NEW CONDUIT INTO EXISTING POLE MOUNTED CABINET
25. INSTALL NEW RISER INTO EXISTING POLE MOUNTED CABINET
26. TERMINATE COMMUNICATIONS CABLE ON EXISTING TELEMETRY INTERFACE PANEL IN TRAFFIC SIGNAL CONTROLLER CABINET
27. INSTALL NEW TELEMETRY INTERFACE PANEL IN TRAFFIC SIGNAL CONTROLLER CABINET
28. INSTALL INTERCONNECT CENTER, PATCH PANEL, JUMPERS, AND FUSION SPLICE CABLE IN CABINET
29. INSTALL UNDERGROUND SPLICE ENCLOSURE
30. INSTALL AERIAL SPLICE ENCLOSURE
31. INSTALL POLE MOUNTED SPLICE CABINET
32. INSTALL BASE MOUNTED SPLICE CABINET (336) WITH EXTEND BASE
33. REMOVE EXISTING SPLICE CABINET
34. INSTALL CABINET FOUNDATION
35. REMOVE EXISTING CABINET FOUNDATION
36. INSTALL CCTV CAMERA ASSEMBLY
37. INSTALL CCTV CAMERA WOOD POLE
38. INSTALL CCTV CAMERA METAL POLE AND FOUNDATION
39. INSTALL SPECIAL OVERSIZED JUNCTION BOX WITH 100 FEET OF COMMUNICATIONS CABLE
40. INSTALL OVERSIZED JUNCTION BOX
41. INSTALL BRIDGE MOUNTED JUNCTION BOX
42. INSTALL WOOD POLE
43. REMOVE EXISTING WOOD POLE
44. INSTALL AERIAL GUY ASSEMBLY
45. INSTALL STANDARD GUY ASSEMBLY
46. INSTALL SIDEWALK GUY ASSEMBLY
47. INSTALL MESSENGER CABLE
48. REMOVE EXISTING COMMUNICATIONS CABLE AND MESSENGER CABLE
49. REMOVE EXISTING COMMUNICATIONS CABLE
50. INSTALL REEL END SPLICE
51. INSTALL CABLE STORAGE RACKS (SNOW SHOES) AND STORE 100 FEET OF CABLE
52. INSTALL DELINEATOR MARKER
53. STORE 50 FEET OF COMMUNICATIONS CABLE
54. LASH CABLE(S) TO EXISTING SIGNAL / COMMUNICATIONS CABLE
55. LASH CABLE(S) TO EXISTING MESSENGER CABLE
56. LASH CABLE(S) TO NEW MESSENGER CABLE
57. MODIFY EXISTING ELECTRICAL SERVICE
58. INSTALL NEW ELECTRICAL SERVICE FOR DMS
59. INSTALL NEW BASE MOUNTED CABINET (336)
60. SEAL ALL CONDUIT ENTERING JUNCTION BOXES AND CABINETS WITH MOLDABLE DUCT SEAL
61. INSTALL ETHERNET SWITCH
62. LOCATE EXISTING JUNCTION BOX AND CONNECT WITH NEW CONDUIT
63. BOND MESSENGER CABLE AND RISER TO POLE GROUND

Prepared for the Offices of:

Transportation Mobility and Safety Division
STATE OF NORTH CAROLINA DEPARTMENT OF TRANSPORTATION
Intelligent Transportation Systems Section

750 N. Greenfield Pkwy., Garner, NC 27529

SCALE: NTS

CABLE ROUTING PLANS

DIV 3 BRUNSWICK CO. Near WILMINGTON

PLAN DATE:	January 2018	REVIEWED BY:	G. Green
PREPARED BY:	L. Neal	REVIEWED BY:	P. Marak

REVISIONS	INIT.	DATE

SEAL

PRELIMINARY PLANS
DO NOT USE FOR CONSTRUCTION

SIGNATURE DATE

CADD FILE NAME

PROJECT REFERENCE NO.	SHEET NO.
R-2633D	ITS-16

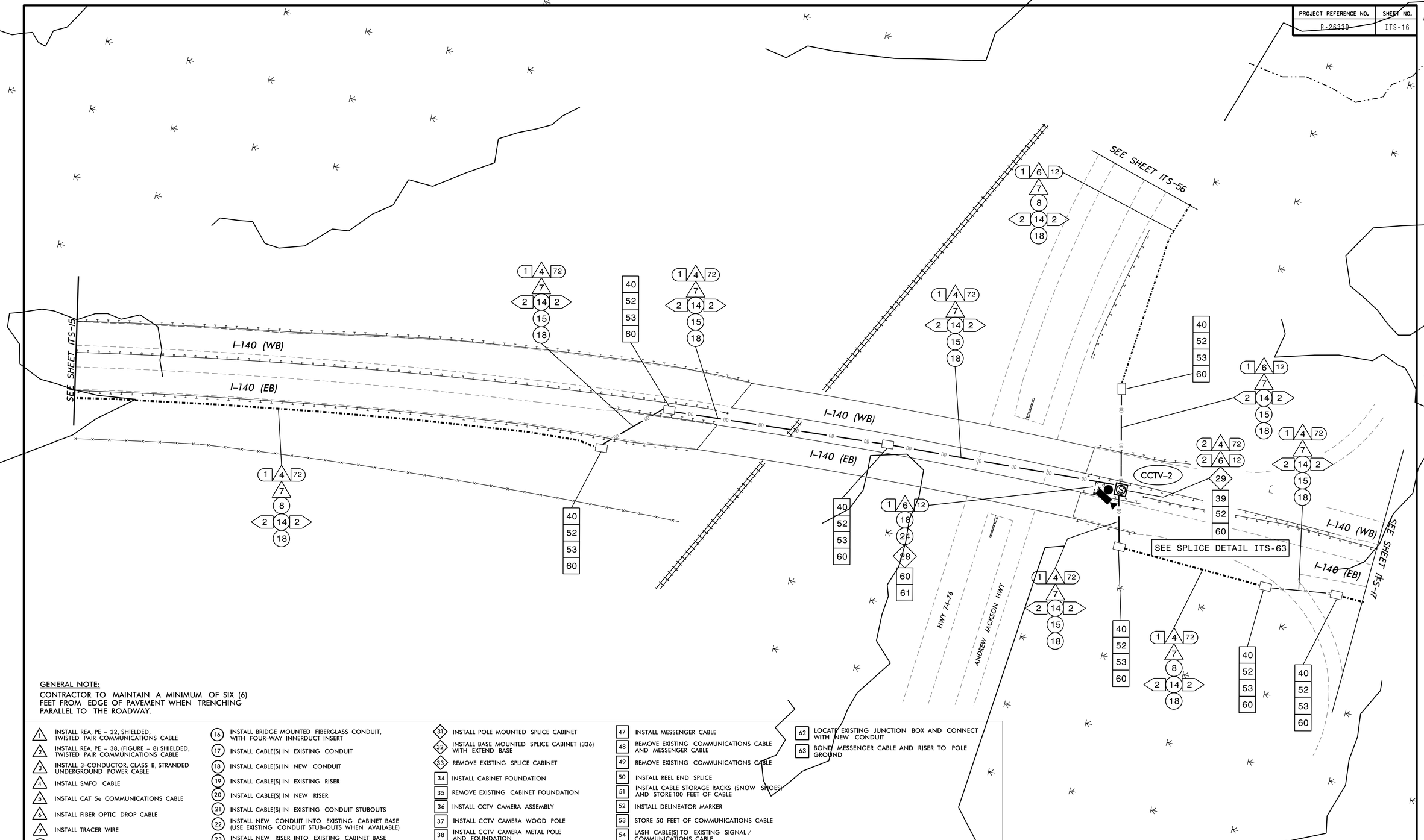

GENERAL NOTE:
CONTRACTOR TO MAINTAIN A MINIMUM OF SIX (6) FEET FROM EDGE OF PAVEMENT WHEN TRENCHING PARALLEL TO THE ROADWAY.

1. INSTALL REA, PE – 22, SHIELDED, TWISTED PAIR COMMUNICATIONS CABLE
2. INSTALL REA, PE – 38, (FIGURE – 8) SHIELDED, TWISTED PAIR COMMUNICATIONS CABLE
3. INSTALL 3–CONDUCTOR, CLASS B, STRANDED UNDERGROUND POWER CABLE
4. INSTALL SMFO CABLE
5. INSTALL CAT 5e COMMUNICATIONS CABLE
6. INSTALL FIBER OPTIC DROP CABLE
7. INSTALL TRACER WIRE
8. TRENCH
9. INSTALL PVC CONDUIT
10. INSTALL RIGID, GALVANIZED STEEL CONDUIT
11. INSTALL RIGID, GALVANIZED STEEL RISER WITH WEATHERHEAD
12. INSTALL RIGID, GALVANIZED STEEL RISER WITH FIBER OPTIC CABLE SEAL
13. INSTALL OUTER–DUCT POLYETHYLENE CONDUIT
14. INSTALL POLYETHYLENE CONDUIT
15. DIRECTIONAL DRILL CONDUIT
16. INSTALL BRIDGE MOUNTED FIBERGLASS CONDUIT, WITH FOUR–WAY INNERDUCT INSERT
17. INSTALL CABLE(S) IN EXISTING CONDUIT
18. INSTALL CABLE(S) IN NEW CONDUIT
19. INSTALL CABLE(S) IN EXISTING RISER
20. INSTALL CABLE(S) IN NEW RISER
21. INSTALL CABLE(S) IN EXISTING CONDUIT STUBOUTS
22. INSTALL NEW CONDUIT INTO EXISTING CABINET BASE (USE EXISTING CONDUIT STUB–OUTS WHEN AVAILABLE)
23. INSTALL NEW RISER INTO EXISTING CABINET BASE (USE EXISTING CONDUIT STUB–OUTS WHEN AVAILABLE)
24. INSTALL NEW CONDUIT INTO EXISTING POLE MOUNTED CABINET
25. INSTALL NEW RISER INTO EXISTING POLE MOUNTED CABINET
26. TERMINATE COMMUNICATIONS CABLE ON EXISTING TELEMETRY INTERFACE PANEL IN TRAFFIC SIGNAL CONTROLLER CABINET
27. INSTALL NEW TELEMETRY INTERFACE PANEL IN TRAFFIC SIGNAL CONTROLLER CABINET
28. INSTALL INTERCONNECT CENTER, PATCH PANEL, JUMPERS, AND FUSION SPLICE CABLE IN CABINET
29. INSTALL UNDERGROUND SPLICE ENCLOSURE
30. INSTALL AERIAL SPLICE ENCLOSURE
31. INSTALL POLE MOUNTED SPLICE CABINET
32. INSTALL BASE MOUNTED SPLICE CABINET (336) WITH EXTEND BASE
33. REMOVE EXISTING SPLICE CABINET
34. INSTALL CABINET FOUNDATION
35. REMOVE EXISTING CABINET FOUNDATION
36. INSTALL CCTV CAMERA ASSEMBLY
37. INSTALL CCTV CAMERA WOOD POLE
38. INSTALL CCTV CAMERA METAL POLE AND FOUNDATION
39. INSTALL SPECIAL OVERSIZED JUNCTION BOX WITH 100 FEET OF COMMUNICATIONS CABLE
40. INSTALL OVERSIZED JUNCTION BOX
41. INSTALL BRIDGE MOUNTED JUNCTION BOX
42. INSTALL WOOD POLE
43. REMOVE EXISTING WOOD POLE
44. INSTALL AERIAL GUY ASSEMBLY
45. INSTALL STANDARD GUY ASSEMBLY
46. INSTALL SIDEWALK GUY ASSEMBLY
47. INSTALL MESSENGER CABLE
48. REMOVE EXISTING COMMUNICATIONS CABLE AND MESSENGER CABLE
49. REMOVE EXISTING COMMUNICATIONS CABLE
50. INSTALL REEL END SPLICE
51. INSTALL CABLE STORAGE RACKS (SNOW SHOES) AND STORE 100 FEET OF CABLE
52. INSTALL DELINEATOR MARKER
53. STORE 50 FEET OF COMMUNICATIONS CABLE
54. LASH CABLE(S) TO EXISTING SIGNAL / COMMUNICATIONS CABLE
55. LASH CABLE(S) TO EXISTING MESSENGER CABLE
56. LASH CABLE(S) TO NEW MESSENGER CABLE
57. MODIFY EXISTING ELECTRICAL SERVICE
58. INSTALL NEW ELECTRICAL SERVICE FOR DMS
59. INSTALL NEW BASE MOUNTED CABINET (336)
60. SEAL ALL CONDUIT ENTERING JUNCTION BOXES AND CABINETS WITH MOLDABLE DUCT SEAL
61. INSTALL ETHERNET SWITCH
62. LOCATE EXISTING JUNCTION BOX AND CONNECT WITH NEW CONDUIT
63. BOND MESSENGER CABLE AND RISER TO POLE GROUND

Prepared for the Offices of:
STATE OF NORTH CAROLINA DEPARTMENT OF TRANSPORTATION
Transportation Mobility and Safety Division
Intermodal Transportation Systems Section
750 N. Greenfield Pkwy., Garner, NC 27529

CABLE ROUTING PLANS

DIV 3 BRUNSWICK CO. Near WILMINGTON

PLAN DATE:	January 2018	REVIEWED BY:	G. Green
PREPARED BY:	L. Neal	REVIEWED BY:	P. Marak

SCALE: NTS

REVISIONS	INIT.	DATE

SEAL
PRELIMINARY PLANS
DO NOT USE FOR CONSTRUCTION
SIGNATURE DATE
CADD FILE NAME

Revised 3/2/2018

Revised 3/2/2018

PROJECT REFERENCE NO.	SHEET NO.
R-2633D	ITS-17

GENERAL NOTE:
CONTRACTOR TO MAINTAIN A MINIMUM OF SIX (6) FEET FROM EDGE OF PAVEMENT WHEN TRENCHING PARALLEL TO THE ROADWAY.

1. INSTALL REA, PE – 22, SHIELDED, TWISTED PAIR COMMUNICATIONS CABLE
2. INSTALL REA, PE – 38 (FIGURE – 8) SHIELDED, TWISTED PAIR COMMUNICATIONS CABLE
3. INSTALL 3-CONDUCTOR, CLASS B, STRANDED UNDERGROUND POWER CABLE
4. INSTALL SMFO CABLE
5. INSTALL CAT 5e COMMUNICATIONS CABLE
6. INSTALL FIBER OPTIC DROP CABLE
7. INSTALL TRACER WIRE
8. TRENCH
9. INSTALL PVC CONDUIT
10. INSTALL RIGID, GALVANIZED STEEL CONDUIT
11. INSTALL RIGID, GALVANIZED STEEL RISER WITH WEATHERHEAD
12. INSTALL RIGID, GALVANIZED STEEL RISER WITH FIBER OPTIC CABLE SEAL
13. INSTALL OUTER-DUCT POLYETHYLENE CONDUIT
14. INSTALL POLYETHYLENE CONDUIT
15. DIRECTIONAL DRILL CONDUIT
16. INSTALL BRIDGE MOUNTED FIBERGLASS CONDUIT, WITH FOUR-WAY INNERDUCT INSERT
17. INSTALL CABLE(S) IN EXISTING CONDUIT
18. INSTALL CABLE(S) IN NEW CONDUIT
19. INSTALL CABLE(S) IN EXISTING RISER
20. INSTALL CABLE(S) IN NEW RISER
21. INSTALL CABLE(S) IN EXISTING CONDUIT STUBOUTS
22. INSTALL NEW CONDUIT INTO EXISTING CABINET BASE (USE EXISTING CONDUIT STUB-OUTS WHEN AVAILABLE)
23. INSTALL NEW RISER INTO EXISTING CABINET BASE (USE EXISTING CONDUIT STUB-OUTS WHEN AVAILABLE)
24. INSTALL NEW CONDUIT INTO EXISTING POLE MOUNTED CABINET
25. INSTALL NEW RISER INTO EXISTING POLE MOUNTED CABINET
26. TERMINATE COMMUNICATIONS CABLE ON EXISTING TELEMETRY INTERFACE PANEL IN TRAFFIC SIGNAL CONTROLLER CABINET
27. INSTALL NEW TELEMETRY INTERFACE PANEL IN TRAFFIC SIGNAL CONTROLLER CABINET
28. INSTALL INTERCONNECT CENTER, PATCH PANEL, JUMPERS, AND FUSION SPLICE CABLE IN CABINET
29. INSTALL UNDERGROUND SPLICE ENCLOSURE
30. INSTALL AERIAL SPLICE ENCLOSURE
31. INSTALL POLE MOUNTED SPLICE CABINET
32. INSTALL BASE MOUNTED SPLICE CABINET (336) WITH EXTEND BASE
33. REMOVE EXISTING SPLICE CABINET
34. INSTALL CABINET FOUNDATION
35. REMOVE EXISTING CABINET FOUNDATION
36. INSTALL CCTV CAMERA ASSEMBLY
37. INSTALL CCTV CAMERA WOOD POLE
38. INSTALL CCTV CAMERA METAL POLE AND FOUNDATION
39. INSTALL SPECIAL OVERSIZED JUNCTION BOX WITH 100 FEET OF COMMUNICATIONS CABLE
40. INSTALL OVERSIZED JUNCTION BOX
41. INSTALL BRIDGE MOUNTED JUNCTION BOX
42. INSTALL WOOD POLE
43. REMOVE EXISTING WOOD POLE
44. INSTALL AERIAL GUY ASSEMBLY
45. INSTALL STANDARD GUY ASSEMBLY
46. INSTALL SIDEWALK GUY ASSEMBLY
47. INSTALL MESSENGER CABLE
48. REMOVE EXISTING COMMUNICATIONS CABLE AND MESSENGER CABLE
49. REMOVE EXISTING COMMUNICATIONS CABLE
50. INSTALL REEL END SPLICE
51. INSTALL CABLE STORAGE RACKS (SNOW SHOES) AND STORE 100 FEET OF CABLE
52. INSTALL DELINEATOR MARKER
53. STORE 50 FEET OF COMMUNICATIONS CABLE
54. LASH CABLE(S) TO EXISTING SIGNAL / COMMUNICATIONS CABLE
55. LASH CABLE(S) TO EXISTING MESSENGER CABLE
56. LASH CABLE(S) TO NEW MESSENGER CABLE
57. MODIFY EXISTING ELECTRICAL SERVICE
58. INSTALL NEW ELECTRICAL SERVICE FOR DMS
59. INSTALL NEW BASE MOUNTED CABINET (336)
60. SEAL ALL CONDUIT ENTERING JUNCTION BOXES AND CABINETS WITH MOLDABLE DUCT SEAL
61. INSTALL ETHERNET SWITCH
62. LOCATE EXISTING JUNCTION BOX AND CONNECT WITH NEW CONDUIT
63. BOND MESSENGER CABLE AND RISER TO POLE GROUND

Prepared for the Offices of:
Transportation Mobility and Safety Division
STATE OF NORTH CAROLINA DEPARTMENT OF TRANSPORTATION
Intermodal Transportation Building
750 N. Greenfield Pkwy., Garner, NC 27529

SCALE: NTS

CABLE ROUTING PLANS

DIV 3 BRUNSWICK CO. Near WILMINGTON

PLAN DATE:	January 2018	REVIEWED BY:	G. Green
PREPARED BY:	L. Neal	REVIEWED BY:	P. Marak

REVISIONS	INIT.	DATE

SEAL
PRELIMINARY PLANS
DO NOT USE FOR CONSTRUCTION
SIGNATURE DATE
CADD FILE NAME

PROJECT REFERENCE NO.	SHEET NO.
R-2633D	ITS-18

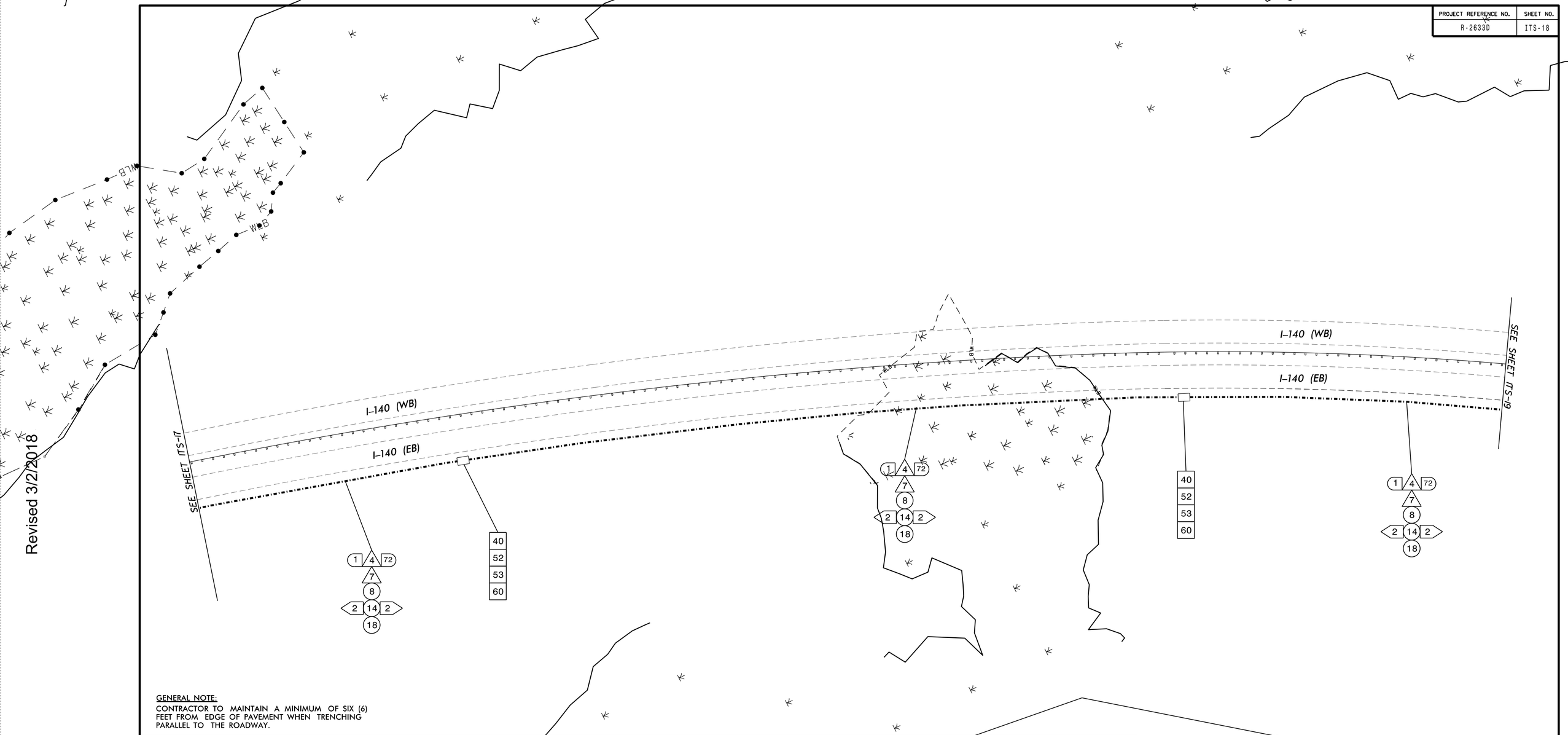

GENERAL NOTE:

CONTRACTOR TO MAINTAIN A MINIMUM OF SIX (6) FEET FROM EDGE OF PAVEMENT WHEN TRENCHING PARALLEL TO THE ROADWAY.

1. INSTALL REA, PE – 22, SHIELDED, TWISTED PAIR COMMUNICATIONS CABLE
2. INSTALL REA, PE – 38, (FIGURE – 8) SHIELDED, TWISTED PAIR COMMUNICATIONS CABLE
3. INSTALL 3–CONDUCTOR, CLASS B, STRANDED UNDERGROUND POWER CABLE
4. INSTALL SMFO CABLE
5. INSTALL CAT 5e COMMUNICATIONS CABLE
6. INSTALL FIBER OPTIC DROP CABLE
7. INSTALL TRACER WIRE
8. TRENCH
9. INSTALL PVC CONDUIT
10. INSTALL RIGID, GALVANIZED STEEL CONDUIT
11. INSTALL RIGID, GALVANIZED STEEL RISER WITH WEATHERHEAD
12. INSTALL RIGID, GALVANIZED STEEL RISER WITH FIBER OPTIC CABLE SEAL
13. INSTALL OUTER–DUCT POLYETHYLENE CONDUIT
14. INSTALL POLYETHYLENE CONDUIT
15. DIRECTIONAL DRILL CONDUIT
16. INSTALL BRIDGE MOUNTED FIBERGLASS CONDUIT, WITH FOUR–WAY INNERDUCT INSERT
17. INSTALL CABLE(S) IN EXISTING CONDUIT
18. INSTALL CABLE(S) IN NEW CONDUIT
19. INSTALL CABLE(S) IN EXISTING RISER
20. INSTALL CABLE(S) IN NEW RISER
21. INSTALL CABLE(S) IN EXISTING CONDUIT STUBOUTS
22. INSTALL NEW CONDUIT INTO EXISTING CABINET BASE (USE EXISTING CONDUIT STUB–OUTS WHEN AVAILABLE)
23. INSTALL NEW RISER INTO EXISTING CABINET BASE (USE EXISTING CONDUIT STUB–OUTS WHEN AVAILABLE)
24. INSTALL NEW CONDUIT INTO EXISTING POLE MOUNTED CABINET
25. INSTALL NEW RISER INTO EXISTING POLE MOUNTED CABINET
26. TERMINATE COMMUNICATIONS CABLE ON EXISTING TELEMETRY INTERFACE PANEL IN TRAFFIC SIGNAL CONTROLLER CABINET
27. INSTALL NEW TELEMETRY INTERFACE PANEL IN TRAFFIC SIGNAL CONTROLLER CABINET
28. INSTALL INTERCONNECT CENTER, PATCH PANEL, JUMPERS, AND FUSION SPLICE CABLE IN CABINET
29. INSTALL UNDERGROUND SPLICE ENCLOSURE
30. INSTALL AERIAL SPLICE ENCLOSURE
31. INSTALL POLE MOUNTED SPLICE CABINET
32. INSTALL BASE MOUNTED SPLICE CABINET (336) WITH EXTEND BASE
33. REMOVE EXISTING SPLICE CABINET
34. INSTALL CABINET FOUNDATION
35. REMOVE EXISTING CABINET FOUNDATION
36. INSTALL CCTV CAMERA ASSEMBLY
37. INSTALL CCTV CAMERA WOOD POLE
38. INSTALL CCTV CAMERA METAL POLE AND FOUNDATION
39. INSTALL SPECIAL OVERSIZED JUNCTION BOX WITH 100 FEET OF COMMUNICATIONS CABLE
40. INSTALL OVERSIZED JUNCTION BOX
41. INSTALL BRIDGE MOUNTED JUNCTION BOX
42. INSTALL WOOD POLE
43. REMOVE EXISTING WOOD POLE
44. INSTALL AERIAL GUY ASSEMBLY
45. INSTALL STANDARD GUY ASSEMBLY
46. INSTALL SIDEWALK GUY ASSEMBLY
47. INSTALL MESSENGER CABLE
48. REMOVE EXISTING COMMUNICATIONS CABLE AND MESSENGER CABLE
49. REMOVE EXISTING COMMUNICATIONS CABLE
50. INSTALL REEL END SPLICE
51. INSTALL CABLE STORAGE RACKS (SNOW SHOES) AND STORE 100 FEET OF CABLE
52. INSTALL DELINEATOR MARKER
53. STORE 50 FEET OF COMMUNICATIONS CABLE
54. LASH CABLE(S) TO EXISTING SIGNAL / COMMUNICATIONS CABLE
55. LASH CABLE(S) TO EXISTING MESSENGER CABLE
56. LASH CABLE(S) TO NEW MESSENGER CABLE
57. MODIFY EXISTING ELECTRICAL SERVICE
58. INSTALL NEW ELECTRICAL SERVICE FOR DMS
59. INSTALL NEW BASE MOUNTED CABINET (336)
60. SEAL ALL CONDUIT ENTERING JUNCTION BOXES AND CABINETS WITH MOLDABLE DUCT SEAL
61. INSTALL ETHERNET SWITCH
62. LOCATE EXISTING JUNCTION BOX AND CONNECT WITH NEW CONDUIT
63. BOND MESSENGER CABLE AND RISER TO POLE GROUND

Prepared for the Offices of:

STATE OF NORTH CAROLINA DEPARTMENT OF TRANSPORTATION

750 N. Greenfield Pkwy., Garner, NC 27529

SCALE: NTS

CABLE ROUTING PLANS

DIV 3 BRUNSWICK CO. Near WILMINGTON

PLAN DATE:	January 2018	REVIEWED BY:	G. Green
PREPARED BY:	L. Neal	REVIEWED BY:	P. Marak

REVISIONS	INIT.	DATE

SEAL

PRELIMINARY PLANS DO NOT USE FOR CONSTRUCTION

SIGNATURE DATE

CADD FILE NAME

Revised 3/2/2018

PROJECT REFERENCE NO.	SHEET NO.
R-2633D	ITS-19

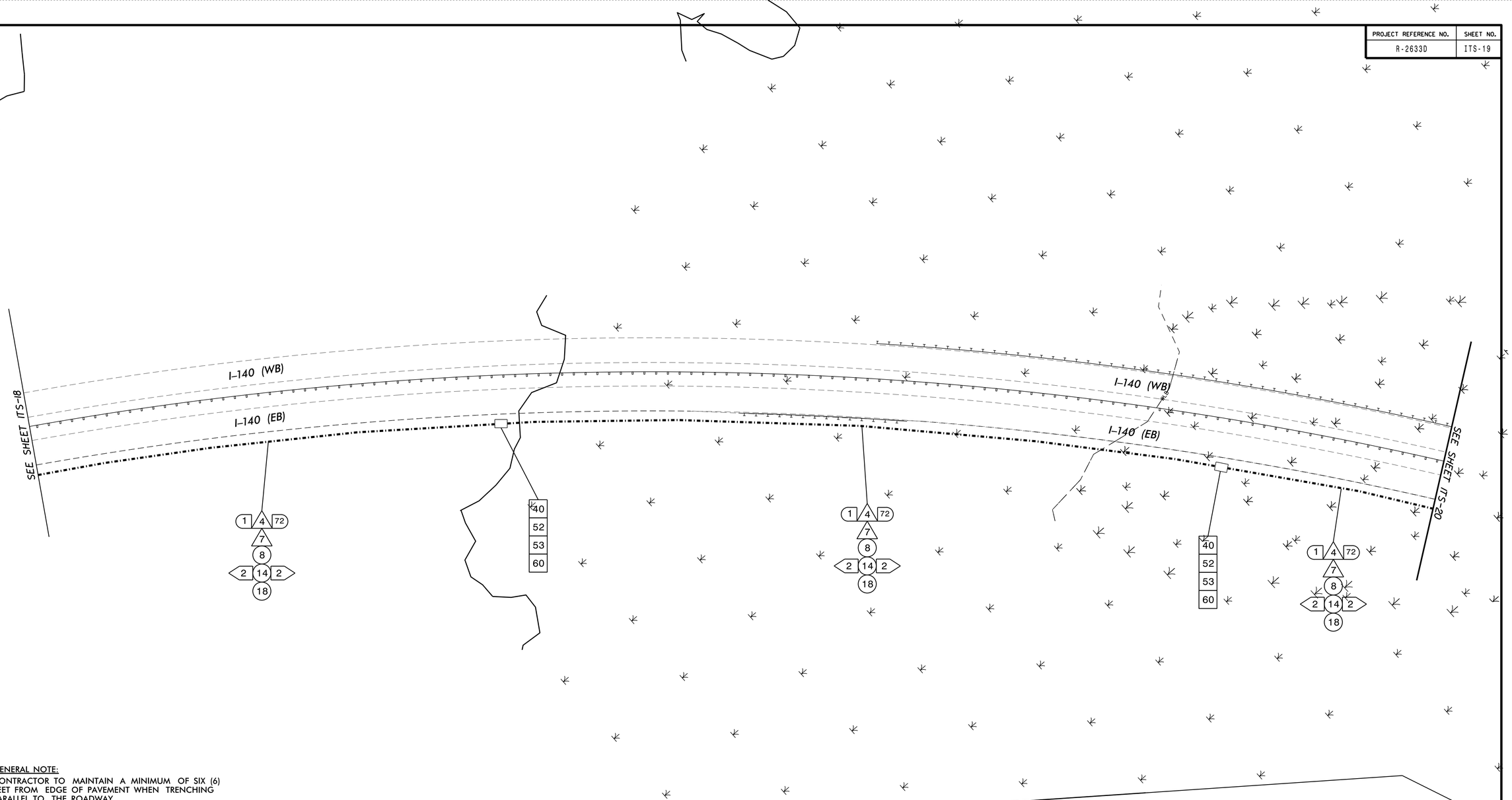

GENERAL NOTE:

CONTRACTOR TO MAINTAIN A MINIMUM OF SIX (6) FEET FROM EDGE OF PAVEMENT WHEN TRENCHING PARALLEL TO THE ROADWAY.

1. INSTALL REA, PE – 22, SHIELDED, TWISTED PAIR COMMUNICATIONS CABLE
2. INSTALL REA, PE – 38, (FIGURE – 8) SHIELDED, TWISTED PAIR COMMUNICATIONS CABLE
3. INSTALL 3-CONDUCTOR, CLASS B, STRANDED ~~UNDERGROUND POWER CABLE~~
4. INSTALL SMFO CABLE
5. INSTALL CAT 5e COMMUNICATIONS CABLE
6. INSTALL FIBER OPTIC DROP CABLE
7. INSTALL TRACER WIRE
8. TRENCH
9. INSTALL PVC CONDUIT
10. INSTALL RIGID, GALVANIZED STEEL CONDUIT
11. INSTALL RIGID, GALVANIZED STEEL RISER WITH WEATHERHEAD
12. INSTALL RIGID, GALVANIZED STEEL RISER WITH FIBER OPTIC CABLE SEAL
13. INSTALL OUTER-DUCT POLYETHYLENE CONDUIT
14. INSTALL POLYETHYLENE CONDUIT
15. DIRECTIONAL DRILL CONDUIT
16. INSTALL BRIDGE MOUNTED FIBERGLASS CONDUIT, WITH FOUR-WAY INNERDUCT INSERT
17. INSTALL CABLE(S) IN EXISTING CONDUIT
18. INSTALL CABLE(S) IN NEW CONDUIT
19. INSTALL CABLE(S) IN EXISTING RISER
20. INSTALL CABLE(S) IN NEW RISER
21. INSTALL CABLE(S) IN EXISTING CONDUIT STUBOUTS
22. INSTALL NEW CONDUIT INTO EXISTING CABINET BASE (USE EXISTING CONDUIT STUB-OUTS WHEN AVAILABLE)
23. INSTALL NEW RISER INTO EXISTING CABINET BASE (USE EXISTING CONDUIT STUB-OUTS WHEN AVAILABLE)
24. INSTALL NEW CONDUIT INTO EXISTING POLE MOUNTED CABINET
25. INSTALL NEW RISER INTO EXISTING POLE MOUNTED CABINET
26. TERMINATE COMMUNICATIONS CABLE ON EXISTING TELEMETRY INTERFACE PANEL IN TRAFFIC SIGNAL CONTROLLER CABINET
27. INSTALL NEW TELEMETRY INTERFACE PANEL IN TRAFFIC SIGNAL CONTROLLER CABINET
28. INSTALL INTERCONNECT CENTER, PATCH PANEL, JUMPERS, AND FUSION SPLICE CABLE IN CABINET
29. INSTALL UNDERGROUND SPLICE ENCLOSURE
30. INSTALL AERIAL SPLICE ENCLOSURE
31. INSTALL POLE MOUNTED SPLICE CABINET
32. INSTALL BASE MOUNTED SPLICE CABINET (336) WITH EXTEND BASE
33. REMOVE EXISTING SPLICE CABINET
34. INSTALL CABINET FOUNDATION
35. REMOVE EXISTING CABINET FOUNDATION
36. INSTALL CCTV CAMERA ASSEMBLY
37. INSTALL CCTV CAMERA WOOD POLE
38. INSTALL CCTV CAMERA METAL POLE AND FOUNDATION
39. INSTALL SPECIAL OVERSIZED JUNCTION BOX WITH 100 FEET OF COMMUNICATIONS CABLE
40. INSTALL OVERSIZED JUNCTION BOX
41. INSTALL BRIDGE MOUNTED JUNCTION BOX
42. INSTALL WOOD POLE
43. REMOVE EXISTING WOOD POLE
44. INSTALL AERIAL GUY ASSEMBLY
45. INSTALL STANDARD GUY ASSEMBLY
46. INSTALL SIDEWALK GUY ASSEMBLY
47. INSTALL MESSENGER CABLE
48. REMOVE EXISTING COMMUNICATIONS CABLE AND MESSENGER CABLE
49. REMOVE EXISTING COMMUNICATIONS CABLE
50. INSTALL REEL END SPLICE
51. INSTALL CABLE STORAGE RACKS (SNOW SHOES) AND STORE 100 FEET OF CABLE
52. INSTALL DELINEATOR MARKER
53. STORE 50 FEET OF COMMUNICATIONS CABLE
54. LASH CABLE(S) TO EXISTING SIGNAL / COMMUNICATIONS CABLE
55. LASH CABLE(S) TO EXISTING MESSENGER CABLE
56. LASH CABLE(S) TO NEW MESSENGER CABLE
57. MODIFY EXISTING ELECTRICAL SERVICE
58. INSTALL NEW ELECTRICAL SERVICE FOR DMS
59. INSTALL NEW BASE MOUNTED CABINET (336)
60. SEAL ALL CONDUIT ENTERING JUNCTION BOXES AND CABINETS WITH MOLDABLE DUCT SEAL
61. INSTALL ETHERNET SWITCH
62. LOCATE EXISTING JUNCTION BOX AND CONNECT WITH NEW CONDUIT
63. BOND MESSENGER CABLE AND RISER TO POLE GROUND

Prepared for the Offices of:

STATE OF NORTH CAROLINA DEPARTMENT OF TRANSPORTATION
Intelligent Transportation Mobility and Safety Division
Systems Management

750 N. Greenfield Pkwy., Garner, NC 27529

SCALE: NTS

CABLE ROUTING PLANS

DIV 3 BRUNSWICK CO. Near WILMINGTON

PLAN DATE:	January 2018	REVIEWED BY:	G. Green
PREPARED BY:	L. Neal	REVIEWED BY:	P. Marak

REVISIONS	INIT.	DATE

SEAL

PRELIMINARY PLANS
DO NOT USE FOR CONSTRUCTION

SIGNATURE DATE

CADD FILE NAME

Revised 3/2/2018

PROJECT REFERENCE NO.	SHEET NO.
R-2633D	ITS-20

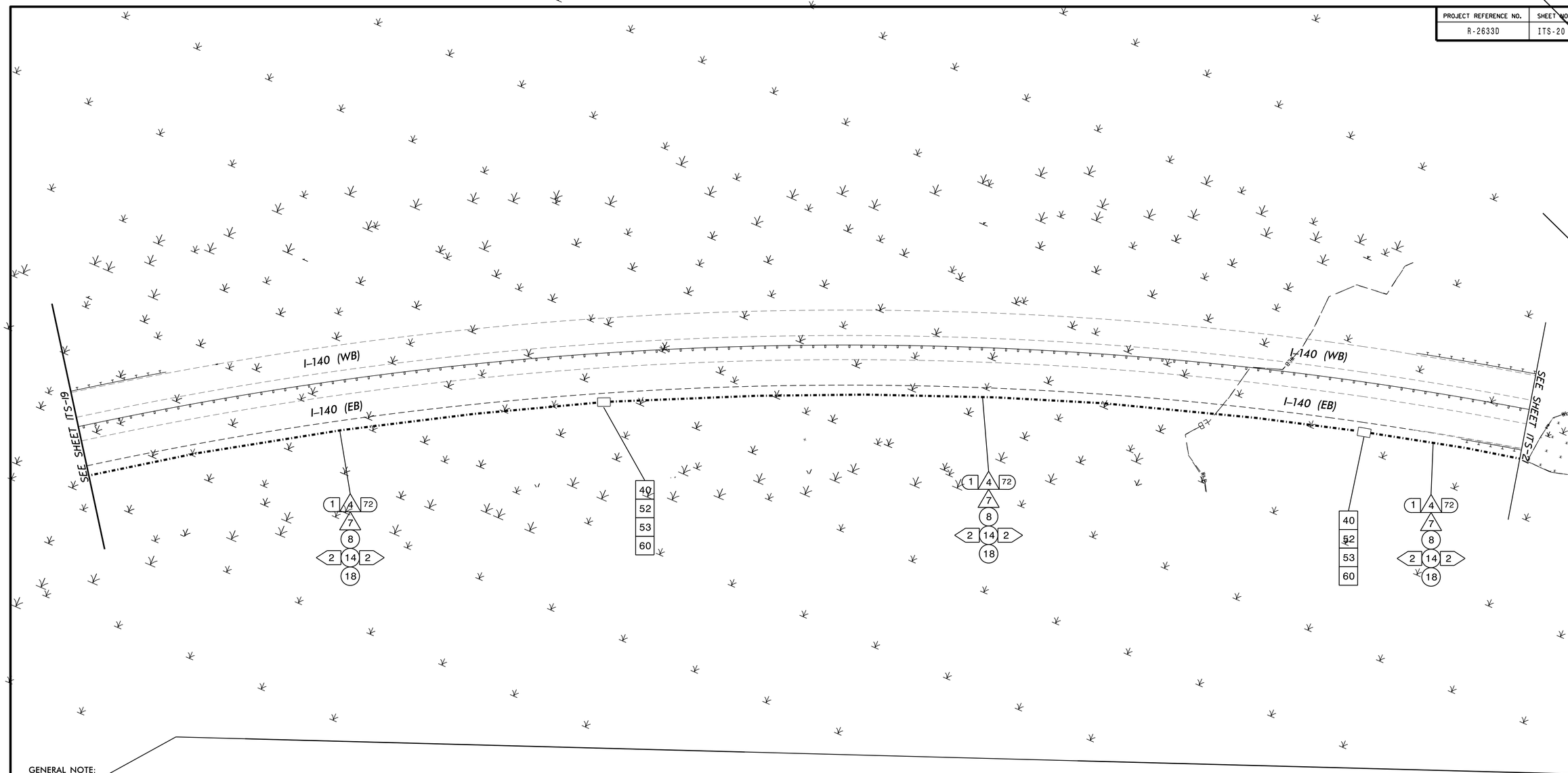

GENERAL NOTE:

CONTRACTOR TO MAINTAIN A MINIMUM OF SIX (6) FEET FROM EDGE OF PAVEMENT WHEN TRENCHING PARALLEL TO THE ROADWAY.

1. INSTALL REA, PE – 22, SHIELDED, TWISTED PAIR COMMUNICATIONS CABLE
2. INSTALL REA, PE – 38, (FIGURE – 8) SHIELDED, TWISTED PAIR COMMUNICATIONS CABLE
3. INSTALL 3-CONDUCTOR, CLASS B, STRANDED UNDERGROUND POWER CABLE
4. INSTALL SMFO CABLE
5. INSTALL CAT 5e COMMUNICATIONS CABLE
6. INSTALL FIBER OPTIC DROP CABLE
7. INSTALL TRACER WIRE
8. TRENCH
9. INSTALL PVC CONDUIT
10. INSTALL RIGID, GALVANIZED STEEL CONDUIT
11. INSTALL RIGID, GALVANIZED STEEL RISER WITH WEATHERHEAD
12. INSTALL RIGID, GALVANIZED STEEL RISER WITH FIBER OPTIC CABLE SEAL
13. INSTALL OUTER-DUCT POLYETHYLENE CONDUIT
14. INSTALL POLYETHYLENE CONDUIT
15. DIRECTIONAL DRILL CONDUIT
16. INSTALL BRIDGE MOUNTED FIBERGLASS CONDUIT, WITH FOUR-WAY INNERDUCT INSERT
17. INSTALL CABLE(S) IN EXISTING CONDUIT
18. INSTALL CABLE(S) IN NEW CONDUIT
19. INSTALL CABLE(S) IN EXISTING RISER
20. INSTALL CABLE(S) IN NEW RISER
21. INSTALL CABLE(S) IN EXISTING CONDUIT STUBOUTS
22. INSTALL NEW CONDUIT INTO EXISTING CABINET BASE (USE EXISTING CONDUIT STUB-OUTS WHEN AVAILABLE)
23. INSTALL NEW RISER INTO EXISTING CABINET BASE (USE EXISTING CONDUIT STUB-OUTS WHEN AVAILABLE)
24. INSTALL NEW CONDUIT INTO EXISTING POLE MOUNTED CABINET
25. INSTALL NEW RISER INTO EXISTING POLE MOUNTED CABINET
26. TERMINATE COMMUNICATIONS CABLE ON EXISTING TELEMETRY INTERFACE PANEL IN TRAFFIC SIGNAL CONTROLLER CABINET
27. INSTALL NEW TELEMETRY INTERFACE PANEL IN TRAFFIC SIGNAL CONTROLLER CABINET
28. INSTALL INTERCONNECT CENTER, PATCH PANEL, JUMPERS, AND FUSION SPLICE CABLE IN CABINET
29. INSTALL UNDERGROUND SPLICE ENCLOSURE
30. INSTALL AERIAL SPLICE ENCLOSURE
31. INSTALL POLE MOUNTED SPLICE CABINET
32. INSTALL BASE MOUNTED SPLICE CABINET (336) WITH EXTEND BASE
33. REMOVE EXISTING SPLICE CABINET
34. INSTALL CABINET FOUNDATION
35. REMOVE EXISTING CABINET FOUNDATION
36. INSTALL CCTV CAMERA ASSEMBLY
37. INSTALL CCTV CAMERA WOOD POLE
38. INSTALL CCTV CAMERA METAL POLE AND FOUNDATION
39. INSTALL SPECIAL OVERSIZED JUNCTION BOX WITH 100 FEET OF COMMUNICATIONS CABLE
40. INSTALL OVERSIZED JUNCTION BOX
41. INSTALL BRIDGE MOUNTED JUNCTION BOX
42. INSTALL WOOD POLE
43. REMOVE EXISTING WOOD POLE
44. INSTALL AERIAL GUY ASSEMBLY
45. INSTALL STANDARD GUY ASSEMBLY
46. INSTALL SIDEWALK GUY ASSEMBLY
47. INSTALL MESSENGER CABLE
48. REMOVE EXISTING COMMUNICATIONS CABLE AND MESSENGER CABLE
49. REMOVE EXISTING COMMUNICATIONS CABLE
50. INSTALL REEL END SPLICE
51. INSTALL CABLE STORAGE RACKS (SNOW SHOES) AND STORE 100 FEET OF CABLE
52. INSTALL DELINEATOR MARKER
53. STORE 50 FEET OF COMMUNICATIONS CABLE
54. LASH CABLE(S) TO EXISTING SIGNAL / COMMUNICATIONS CABLE
55. LASH CABLE(S) TO EXISTING MESSENGER CABLE
56. LASH CABLE(S) TO NEW MESSENGER CABLE
57. MODIFY EXISTING ELECTRICAL SERVICE
58. INSTALL NEW ELECTRICAL SERVICE FOR DMS
59. INSTALL NEW BASE MOUNTED CABINET (336)
60. SEAL ALL CONDUIT ENTERING JUNCTION BOXES AND CABINETS WITH MOLDABLE DUCT SEAL
61. INSTALL ETHERNET SWITCH
62. LOCATE EXISTING JUNCTION BOX AND CONNECT WITH NEW CONDUIT
63. BOND MESSENGER CABLE AND RISER TO POLE GROUND

Prepared for the Offices of:

Transportation Mobility and Safety Division
STATE OF NORTH CAROLINA DEPARTMENT OF TRANSPORTATION
Intermodal Transportation Systems Section

750 N. Greenfield Pkwy., Garner, NC 27529

CABLE ROUTING PLANS

DIV 3 BRUNSWICK CO. Near WILMINGTON

PLAN DATE:	January 2018	REVIEWED BY:	G. Green
PREPARED BY:	L. Neal	REVIEWED BY:	P. Marak

SCALE: NTS

REVISIONS	INIT.	DATE

SEAL

PRELIMINARY PLANS
DO NOT USE FOR CONSTRUCTION

SIGNATURE DATE

CADD FILE NAME

Revised 3/2/2018

PROJECT REFERENCE NO.	SHEET NO.
R-2633D	ITS-21

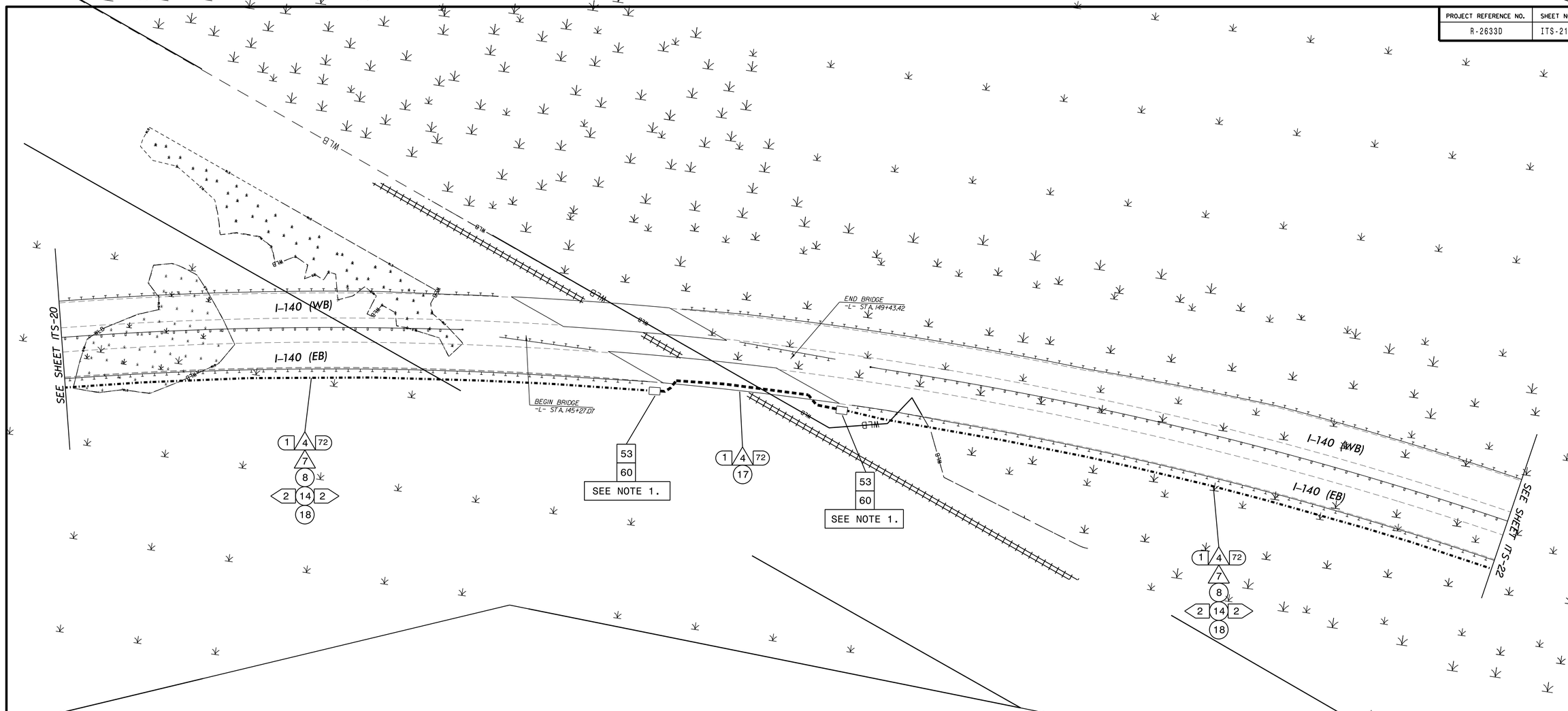

NOTE No.1 CONTRACTOR SHALL LOCATE EXISTING CONDUIT STUB OUT AND SET A NEW OVERSIZE JUNCTION BOX TO RECEIVE FIBER OPTIC CABLE.

GENERAL NOTE:

CONTRACTOR TO MAINTAIN A MINIMUM OF SIX (6) FEET FROM EDGE OF PAVEMENT WHEN TRENCHING PARALLEL TO THE ROADWAY.

1. INSTALL REA, PE – 22, SHIELDED, TWISTED PAIR COMMUNICATIONS CABLE
2. INSTALL REA, PE – 38, (FIGURE – 8) SHIELDED, TWISTED PAIR COMMUNICATIONS CABLE
3. INSTALL 3–CONDUCTOR, CLASS B, STRANDED UNDERGROUND POWER CABLE
4. INSTALL SMFO CABLE
5. INSTALL CAT 5e COMMUNICATIONS CABLE
6. INSTALL FIBER OPTIC DROP CABLE
7. INSTALL TRACER WIRE
8. TRENCH
9. INSTALL PVC CONDUIT
10. INSTALL RIGID, GALVANIZED STEEL CONDUIT
11. INSTALL RIGID, GALVANIZED STEEL RISER WITH WEATHERHEAD
12. INSTALL RIGID, GALVANIZED STEEL RISER WITH FIBER OPTIC CABLE SEAL
13. INSTALL OUTER–DUCT POLYETHYLENE CONDUIT
14. INSTALL POLYETHYLENE CONDUIT
15. DIRECTIONAL DRILL CONDUIT
16. INSTALL BRIDGE MOUNTED FIBERGLASS CONDUIT, WITH FOUR–WAY INNERDUCT INSERT
17. INSTALL CABLE(S) IN EXISTING CONDUIT
18. INSTALL CABLE(S) IN NEW CONDUIT
19. INSTALL CABLE(S) IN EXISTING RISER
20. INSTALL CABLE(S) IN NEW RISER
21. INSTALL CABLE(S) IN EXISTING CONDUIT STUBOUTS
22. INSTALL NEW CONDUIT INTO EXISTING CABINET BASE (USE EXISTING CONDUIT STUB–OUTS WHEN AVAILABLE)
23. INSTALL NEW RISER INTO EXISTING CABINET BASE (USE EXISTING CONDUIT STUB–OUTS WHEN AVAILABLE)
24. INSTALL NEW CONDUIT INTO EXISTING POLE MOUNTED CABINET
25. INSTALL NEW RISER INTO EXISTING POLE MOUNTED CABINET
26. TERMINATE COMMUNICATIONS CABLE ON EXISTING TELEMETRY INTERFACE PANEL IN TRAFFIC SIGNAL CONTROLLER CABINET
27. INSTALL NEW TELEMETRY INTERFACE PANEL IN TRAFFIC SIGNAL CONTROLLER CABINET
28. INSTALL INTERCONNECT CENTER, PATCH PANEL, JUMPERS, AND FUSION SPLICE CABLE IN CABINET
29. INSTALL UNDERGROUND SPLICE ENCLOSURE
30. INSTALL AERIAL SPLICE ENCLOSURE
31. INSTALL POLE MOUNTED SPLICE CABINET
32. INSTALL BASE MOUNTED SPLICE CABINET (336) WITH EXTEND BASE
33. REMOVE EXISTING SPLICE CABINET
34. INSTALL CABINET FOUNDATION
35. REMOVE EXISTING CABINET FOUNDATION
36. INSTALL CCTV CAMERA ASSEMBLY
37. INSTALL CCTV CAMERA WOOD POLE
38. INSTALL CCTV CAMERA METAL POLE AND FOUNDATION
39. INSTALL SPECIAL OVERSIZED JUNCTION BOX WITH 100 FEET OF COMMUNICATIONS CABLE
40. INSTALL OVERSIZED JUNCTION BOX
41. INSTALL BRIDGE MOUNTED JUNCTION BOX
42. INSTALL WOOD POLE
43. REMOVE EXISTING WOOD POLE
44. INSTALL AERIAL GUY ASSEMBLY
45. INSTALL STANDARD GUY ASSEMBLY
46. INSTALL SIDEWALK GUY ASSEMBLY
47. INSTALL MESSENGER CABLE
48. REMOVE EXISTING COMMUNICATIONS CABLE AND MESSENGER CABLE
49. REMOVE EXISTING COMMUNICATIONS CABLE
50. INSTALL REEL END SPLICE
51. INSTALL CABLE STORAGE RACKS (SNOW SHOES) AND STORE 100 FEET OF CABLE
52. INSTALL DELINEATOR MARKER
53. STORE 50 FEET OF COMMUNICATIONS CABLE
54. LASH CABLE(S) TO EXISTING SIGNAL / COMMUNICATIONS CABLE
55. LASH CABLE(S) TO EXISTING MESSENGER CABLE
56. LASH CABLE(S) TO NEW MESSENGER CABLE
57. MODIFY EXISTING ELECTRICAL SERVICE
58. INSTALL NEW ELECTRICAL SERVICE FOR DMS
59. INSTALL NEW BASE MOUNTED CABINET (336)
60. SEAL ALL CONDUIT ENTERING JUNCTION BOXES AND CABINETS WITH MOLDABLE DUCT SEAL
61. INSTALL ETHERNET SWITCH
62. LOCATE EXISTING JUNCTION BOX AND CONNECT WITH NEW CONDUIT
63. BOND MESSENGER CABLE AND RISER TO POLE GROUND

Prepared for the Offices of:

Transportation Mobility and Safety Division
STATE OF NORTH CAROLINA DEPARTMENT OF TRANSPORTATION
Intelligent Transportation Systems Section

750 N. Greenfield Pkwy., Garner, NC 27529

N

SCALE
NTS

CABLE ROUTING PLANS

DIV 3 BRUNSWICK CO. Near WILMINGTON

PLAN DATE:	January 2018	REVIEWED BY:	G. Green
PREPARED BY:	L. Neal	REVIEWED BY:	P. Marak

REVISIONS	INIT.	DATE

SEAL

PRELIMINARY PLANS
DO NOT USE FOR CONSTRUCTION

SIGNATURE DATE

CADD FILE NAME

Revised 3/2/2018

PROJECT REFERENCE NO.	SHEET NO.
R-2633D	ITS-22

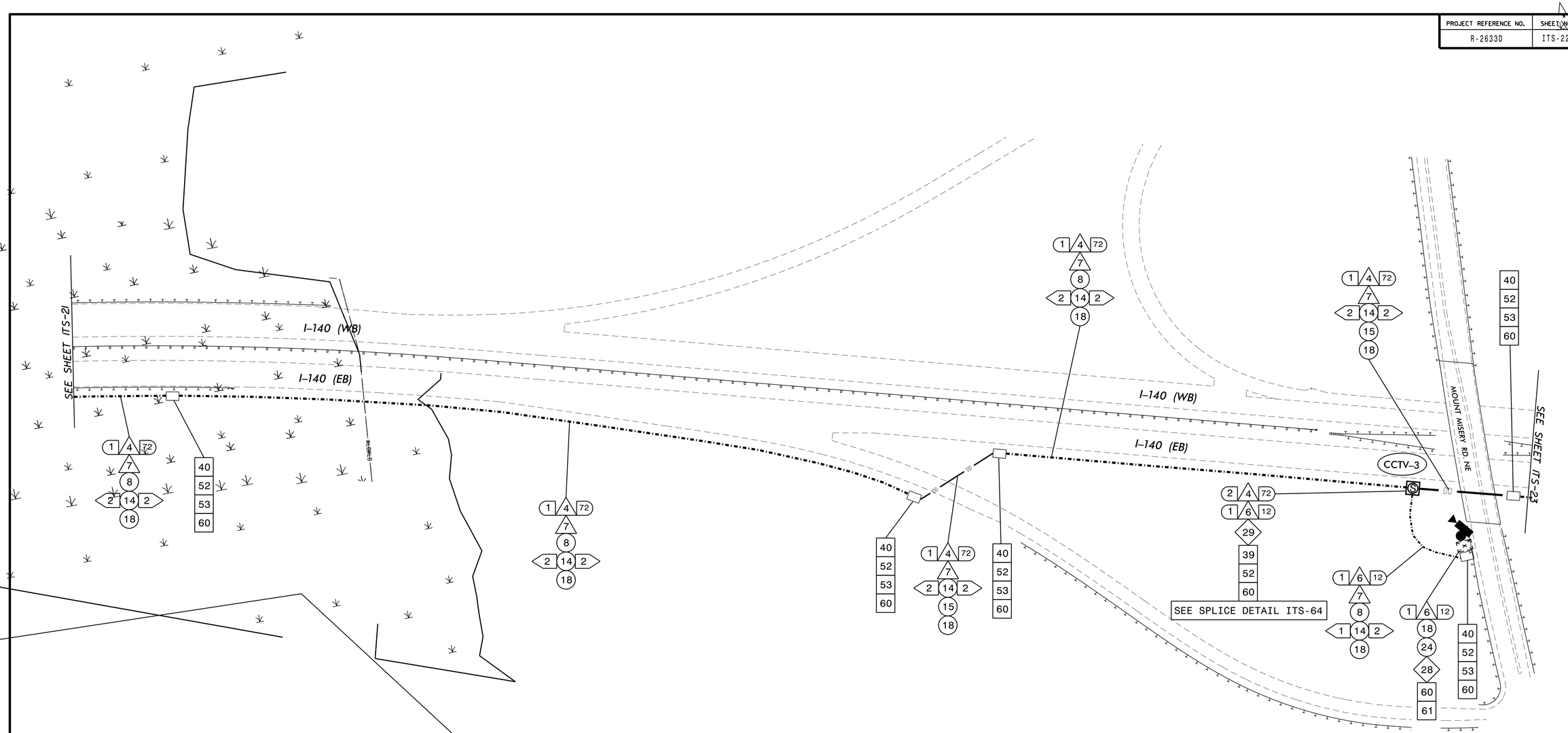

GENERAL NOTE:

CONTRACTOR TO MAINTAIN A MINIMUM OF SIX (6) FEET FROM EDGE OF PAVEMENT WHEN TRENCHING PARALLEL TO THE ROADWAY.

1. INSTALL REA, PE – 22, SHIELDED, TWISTED PAIR COMMUNICATIONS CABLE
2. INSTALL REA, PE – 38, (FIGURE – 8) SHIELDED, TWISTED PAIR COMMUNICATIONS CABLE
3. INSTALL 3-CONDUCTOR, CLASS B, STRANDED UNDERGROUND POWER CABLE
4. INSTALL SMFO CABLE
5. INSTALL CAT 5e COMMUNICATIONS CABLE
6. INSTALL FIBER OPTIC DROP CABLE
7. INSTALL TRACER WIRE
8. TRENCH
9. INSTALL PVC CONDUIT
10. INSTALL RIGID, GALVANIZED STEEL CONDUIT
11. INSTALL RIGID, GALVANIZED STEEL RISER WITH WEATHERHEAD
12. INSTALL RIGID, GALVANIZED STEEL RISER WITH FIBER OPTIC CABLE SEAL
13. INSTALL OUTER-DUCT POLYETHYLENE CONDUIT
14. INSTALL POLYETHYLENE CONDUIT
15. DIRECTIONAL DRILL CONDUIT
16. INSTALL BRIDGE MOUNTED FIBERGLASS CONDUIT, WITH FOUR-WAY INNERDUCT INSERT
17. INSTALL CABLE(S) IN EXISTING CONDUIT
18. INSTALL CABLE(S) IN NEW CONDUIT
19. INSTALL CABLE(S) IN EXISTING RISER
20. INSTALL CABLE(S) IN NEW RISER
21. INSTALL CABLE(S) IN EXISTING CONDUIT STUBOUTS
22. INSTALL NEW CONDUIT INTO EXISTING CABINET BASE (USE EXISTING CONDUIT STUB-OUTS WHEN AVAILABLE)
23. INSTALL NEW RISER INTO EXISTING CABINET BASE (USE EXISTING CONDUIT STUB-OUTS WHEN AVAILABLE)
24. INSTALL NEW CONDUIT INTO EXISTING POLE MOUNTED CABINET
25. INSTALL NEW RISER INTO EXISTING POLE MOUNTED CABINET
26. TERMINATE COMMUNICATIONS CABLE ON EXISTING TELEMETRY INTERFACE PANEL IN TRAFFIC SIGNAL CONTROLLER CABINET
27. INSTALL NEW TELEMETRY INTERFACE PANEL IN TRAFFIC SIGNAL CONTROLLER CABINET
28. INSTALL INTERCONNECT CENTER, PATCH PANEL, JUMPERS, AND FUSION SPLICE CABLE IN CABINET
29. INSTALL UNDERGROUND SPLICE ENCLOSURE
30. INSTALL AERIAL SPLICE ENCLOSURE
31. INSTALL POLE MOUNTED SPLICE CABINET
32. INSTALL BASE MOUNTED SPLICE CABINET (336) WITH EXTEND BASE
33. REMOVE EXISTING SPLICE CABINET
34. INSTALL CABINET FOUNDATION
35. REMOVE EXISTING CABINET FOUNDATION
36. INSTALL CCTV CAMERA ASSEMBLY
37. INSTALL CCTV CAMERA WOOD POLE
38. INSTALL CCTV CAMERA METAL POLE AND FOUNDATION
39. INSTALL SPECIAL OVERSIZED JUNCTION BOX WITH 100 FEET OF COMMUNICATIONS CABLE
40. INSTALL OVERSIZED JUNCTION BOX
41. INSTALL BRIDGE MOUNTED JUNCTION BOX
42. INSTALL WOOD POLE
43. REMOVE EXISTING WOOD POLE
44. INSTALL AERIAL GUY ASSEMBLY
45. INSTALL STANDARD GUY ASSEMBLY
46. INSTALL SIDEWALK GUY ASSEMBLY
47. INSTALL MESSENGER CABLE
48. REMOVE EXISTING COMMUNICATIONS CABLE AND MESSENGER CABLE
49. REMOVE EXISTING COMMUNICATIONS CABLE
50. INSTALL REEL END SPLICE
51. INSTALL CABLE STORAGE RACKS (SNOW SHOES) AND STORE 100 FEET OF CABLE
52. INSTALL DELINEATOR MARKER
53. STORE 50 FEET OF COMMUNICATIONS CABLE
54. LASH CABLE(S) TO EXISTING SIGNAL / COMMUNICATIONS CABLE
55. LASH CABLE(S) TO EXISTING MESSENGER CABLE
56. LASH CABLE(S) TO NEW MESSENGER CABLE
57. MODIFY EXISTING ELECTRICAL SERVICE
58. INSTALL NEW ELECTRICAL SERVICE FOR DMS
59. INSTALL NEW BASE MOUNTED CABINET (336)
60. SEAL ALL CONDUIT ENTERING JUNCTION BOXES AND CABINETS WITH MOLDABLE DUCT SEAL
61. INSTALL ETHERNET SWITCH
62. LOCATE EXISTING JUNCTION BOX AND CONNECT WITH NEW CONDUIT
63. BOND MESSENGER CABLE AND RISER TO POLE GROUND

Revised 3/2/2018

Prepared for the Offices of:
Transportation Mobility and Safety Division
STATE OF NORTH CAROLINA DEPARTMENT OF TRANSPORTATION
Intermodal Transportation Building
750 N. Greenfield Pkwy., Garner, NC 27529

SCALE: NTS

CABLE ROUTING PLANS

DIV 3 BRUNSWICK CO. Near WILMINGTON

PLAN DATE:	January 2018	REVIEWED BY:	G. Green
PREPARED BY:	L. Neal	REVIEWED BY:	P. Marak

REVISIONS	INIT.	DATE

SEAL: PRELIMINARY PLANS DO NOT USE FOR CONSTRUCTION

SIGNATURE | DATE

CADD FILE NAME

Revised 3/2/2018

PROJECT REFERENCE NO.	SHEET NO.
R-2633D	ITS-23

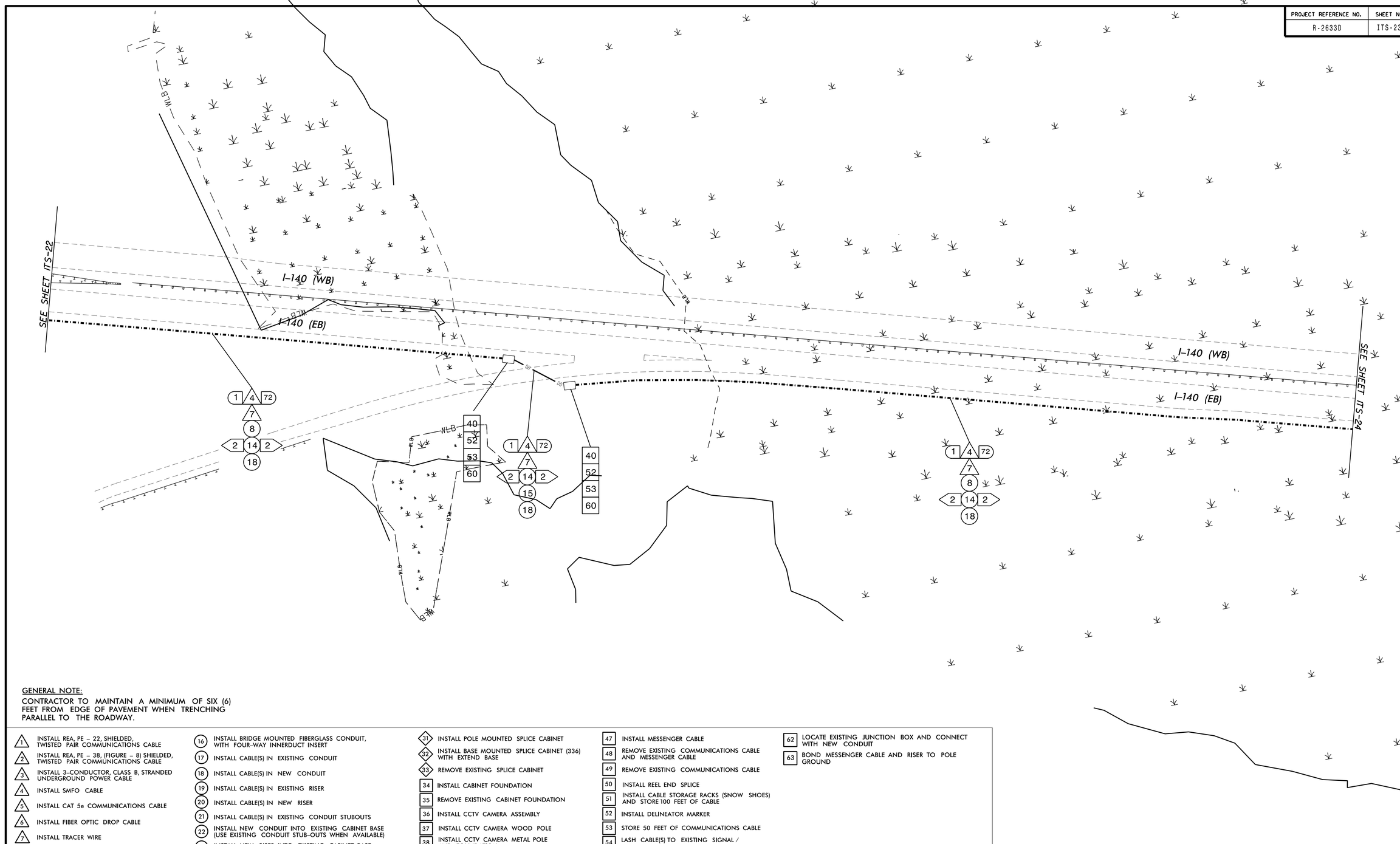

GENERAL NOTE:

CONTRACTOR TO MAINTAIN A MINIMUM OF SIX (6) FEET FROM EDGE OF PAVEMENT WHEN TRENCHING PARALLEL TO THE ROADWAY.

1. INSTALL REA, PE – 22, SHIELDED, TWISTED PAIR COMMUNICATIONS CABLE
2. INSTALL REA, PE – 38, (FIGURE – 8) SHIELDED, TWISTED PAIR COMMUNICATIONS CABLE
3. INSTALL 3–CONDUCTOR, CLASS B, STRANDED UNDERGROUND POWER CABLE
4. INSTALL SMFO CABLE
5. INSTALL CAT 5e COMMUNICATIONS CABLE
6. INSTALL FIBER OPTIC DROP CABLE
7. INSTALL TRACER WIRE
8. TRENCH
9. INSTALL PVC CONDUIT
10. INSTALL RIGID, GALVANIZED STEEL CONDUIT
11. INSTALL RIGID, GALVANIZED STEEL RISER WITH WEATHERHEAD
12. INSTALL RIGID, GALVANIZED STEEL RISER WITH FIBER OPTIC CABLE SEAL
13. INSTALL OUTER–DUCT POLYETHYLENE CONDUIT
14. INSTALL POLYETHYLENE CONDUIT
15. DIRECTIONAL DRILL CONDUIT
16. INSTALL BRIDGE MOUNTED FIBERGLASS CONDUIT, WITH FOUR–WAY INNERDUCT INSERT
17. INSTALL CABLE(S) IN EXISTING CONDUIT
18. INSTALL CABLE(S) IN NEW CONDUIT
19. INSTALL CABLE(S) IN EXISTING RISER
20. INSTALL CABLE(S) IN NEW RISER
21. INSTALL CABLE(S) IN EXISTING CONDUIT STUBOUTS
22. INSTALL NEW CONDUIT INTO EXISTING CABINET BASE (USE EXISTING CONDUIT STUB–OUTS WHEN AVAILABLE)
23. INSTALL NEW RISER INTO EXISTING CABINET BASE (USE EXISTING CONDUIT STUB–OUTS WHEN AVAILABLE)
24. INSTALL NEW CONDUIT INTO EXISTING POLE MOUNTED CABINET
25. INSTALL NEW RISER INTO EXISTING POLE MOUNTED CABINET
26. TERMINATE COMMUNICATIONS CABLE ON EXISTING TELEMETRY INTERFACE PANEL IN TRAFFIC SIGNAL CONTROLLER CABINET
27. INSTALL NEW TELEMETRY INTERFACE PANEL IN TRAFFIC SIGNAL CONTROLLER CABINET
28. INSTALL INTERCONNECT CENTER, PATCH PANEL, JUMPERS, AND FUSION SPLICE CABLE IN CABINET
29. INSTALL UNDERGROUND SPLICE ENCLOSURE
30. INSTALL AERIAL SPLICE ENCLOSURE
31. INSTALL POLE MOUNTED SPLICE CABINET
32. INSTALL BASE MOUNTED SPLICE CABINET (336) WITH EXTEND BASE
33. REMOVE EXISTING SPLICE CABINET
34. INSTALL CABINET FOUNDATION
35. REMOVE EXISTING CABINET FOUNDATION
36. INSTALL CCTV CAMERA ASSEMBLY
37. INSTALL CCTV CAMERA WOOD POLE
38. INSTALL CCTV CAMERA METAL POLE AND FOUNDATION
39. INSTALL SPECIAL OVERSIZED JUNCTION BOX WITH 100 FEET OF COMMUNICATIONS CABLE
40. INSTALL OVERSIZED JUNCTION BOX
41. INSTALL BRIDGE MOUNTED JUNCTION BOX
42. INSTALL WOOD POLE
43. REMOVE EXISTING WOOD POLE
44. INSTALL AERIAL GUY ASSEMBLY
45. INSTALL STANDARD GUY ASSEMBLY
46. INSTALL SIDEWALK GUY ASSEMBLY
47. INSTALL MESSENGER CABLE
48. REMOVE EXISTING COMMUNICATIONS CABLE AND MESSENGER CABLE
49. REMOVE EXISTING COMMUNICATIONS CABLE
50. INSTALL REEL END SPLICE
51. INSTALL CABLE STORAGE RACKS (SNOW SHOES) AND STORE 100 FEET OF CABLE
52. INSTALL DELINEATOR MARKER
53. STORE 50 FEET OF COMMUNICATIONS CABLE
54. LASH CABLE(S) TO EXISTING SIGNAL / COMMUNICATIONS CABLE
55. LASH CABLE(S) TO EXISTING MESSENGER CABLE
56. LASH CABLE(S) TO NEW MESSENGER CABLE
57. MODIFY EXISTING ELECTRICAL SERVICE
58. INSTALL NEW ELECTRICAL SERVICE FOR DMS
59. INSTALL NEW BASE MOUNTED CABINET (336)
60. SEAL ALL CONDUIT ENTERING JUNCTION BOXES AND CABINETS WITH MOLDABLE DUCT SEAL
61. INSTALL ETHERNET SWITCH
62. LOCATE EXISTING JUNCTION BOX AND CONNECT WITH NEW CONDUIT
63. BOND MESSENGER CABLE AND RISER TO POLE GROUND

Prepared for the Offices of:

Transportation Mobility and Safety Division
STATE OF NORTH CAROLINA DEPARTMENT OF TRANSPORTATION
Intermodal Transportation Systems Section

750 N. Greenfield Pkwy., Garner, NC 27529

CABLE ROUTING PLANS

DIV 3 BRUNSWICK CO. Near WILMINGTON

PLAN DATE:	January 2018	REVIEWED BY:	G. Green
PREPARED BY:	L. Neal	REVIEWED BY:	P. Marak

SCALE: NTS

REVISIONS	INIT.	DATE

SEAL

PRELIMINARY PLANS
DO NOT USE FOR CONSTRUCTION

SIGNATURE DATE

CADD FILE NAME

PROJECT REFERENCE NO.	SHEET NO.
R-2633D	ITS-24

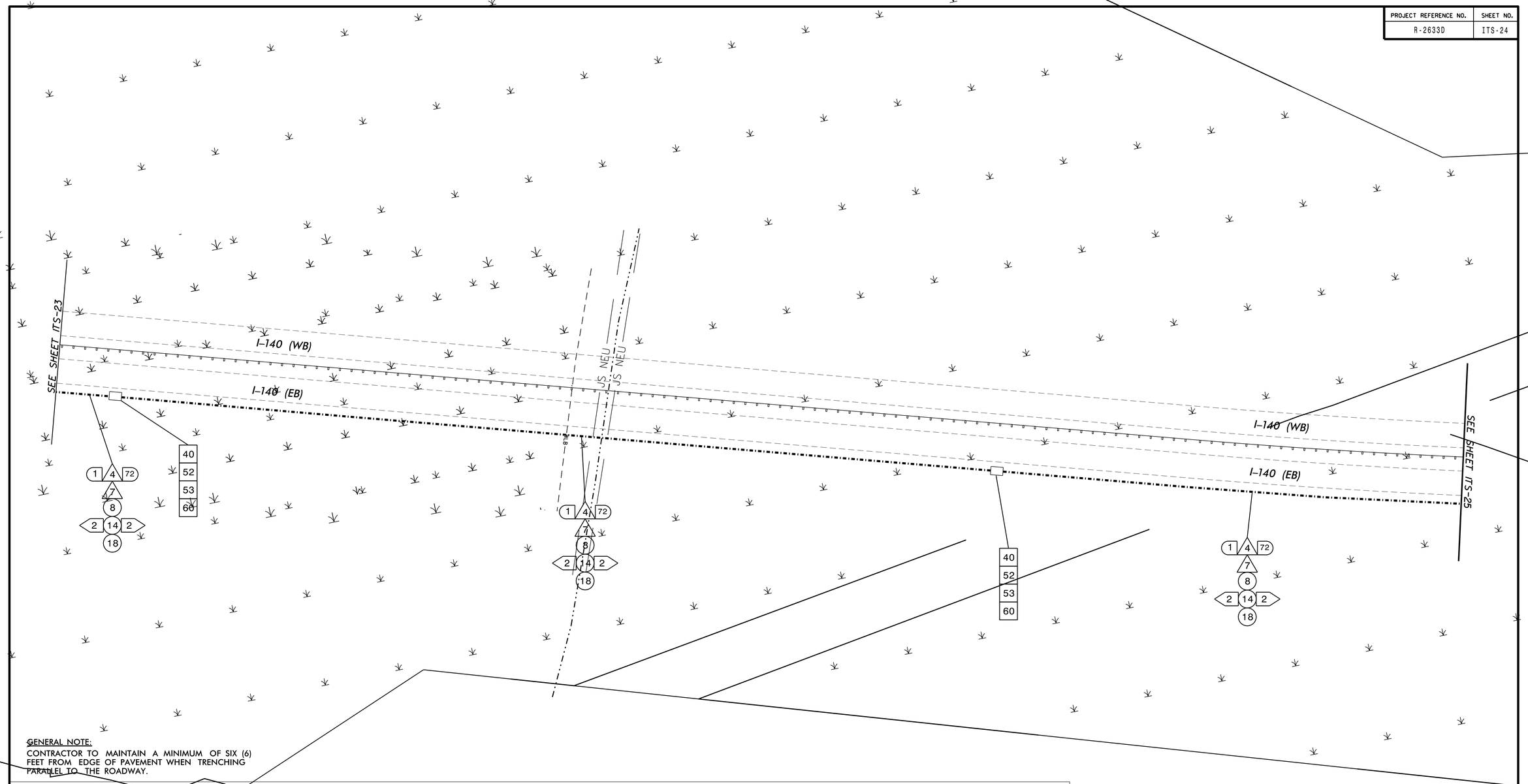

Revised 3/2/2018

GENERAL NOTE:

CONTRACTOR TO MAINTAIN A MINIMUM OF SIX (6) FEET FROM EDGE OF PAVEMENT WHEN TRENCHING PARALLEL TO THE ROADWAY.

1. INSTALL REA, PE – 22, SHIELDED, TWISTED PAIR COMMUNICATIONS CABLE
2. INSTALL REA, PE – 38, (FIGURE – 8) SHIELDED, TWISTED PAIR COMMUNICATIONS CABLE
3. INSTALL 3–CONDUCTOR, CLASS B, STRANDED UNDERGROUND POWER CABLE
4. INSTALL SMFO CABLE
5. INSTALL CAT 5e COMMUNICATIONS CABLE
6. INSTALL FIBER OPTIC DROP CABLE
7. INSTALL TRACER WIRE
8. TRENCH
9. INSTALL PVC CONDUIT
10. INSTALL RIGID, GALVANIZED STEEL CONDUIT
11. INSTALL RIGID, GALVANIZED STEEL RISER WITH WEATHERHEAD
12. INSTALL RIGID, GALVANIZED STEEL RISER WITH FIBER OPTIC CABLE SEAL
13. INSTALL OUTER–DUCT POLYETHYLENE CONDUIT
14. INSTALL POLYETHYLENE CONDUIT
15. DIRECTIONAL DRILL CONDUIT
16. INSTALL BRIDGE MOUNTED FIBERGLASS CONDUIT, WITH FOUR–WAY INNERDUCT INSERT
17. INSTALL CABLE(S) IN EXISTING CONDUIT
18. INSTALL CABLE(S) IN NEW CONDUIT
19. INSTALL CABLE(S) IN EXISTING RISER
20. INSTALL CABLE(S) IN NEW RISER
21. INSTALL CABLE(S) IN EXISTING CONDUIT STUBOUTS
22. INSTALL NEW CONDUIT INTO EXISTING CABINET BASE (USE EXISTING CONDUIT STUB–OUTS WHEN AVAILABLE)
23. INSTALL NEW RISER INTO EXISTING CABINET BASE (USE EXISTING CONDUIT STUB–OUTS WHEN AVAILABLE)
24. INSTALL NEW CONDUIT INTO EXISTING POLE MOUNTED CABINET
25. INSTALL NEW RISER INTO EXISTING POLE MOUNTED CABINET
26. TERMINATE COMMUNICATIONS CABLE ON EXISTING TELEMETRY INTERFACE PANEL IN TRAFFIC SIGNAL CONTROLLER CABINET
27. INSTALL NEW TELEMETRY INTERFACE PANEL IN TRAFFIC SIGNAL CONTROLLER CABINET
28. INSTALL INTERCONNECT CENTER, PATCH PANEL, JUMPERS, AND FUSION SPLICE CABLE IN CABINET
29. INSTALL UNDERGROUND SPLICE ENCLOSURE
30. INSTALL AERIAL SPLICE ENCLOSURE
31. INSTALL POLE MOUNTED SPLICE CABINET
32. INSTALL BASE MOUNTED SPLICE CABINET (336) WITH EXTEND BASE
33. REMOVE EXISTING SPLICE CABINET
34. INSTALL CABINET FOUNDATION
35. REMOVE EXISTING CABINET FOUNDATION
36. INSTALL CCTV CAMERA ASSEMBLY
37. INSTALL CCTV CAMERA WOOD POLE
38. INSTALL CCTV CAMERA METAL POLE AND FOUNDATION
39. INSTALL SPECIAL OVERSIZED JUNCTION BOX WITH 100 FEET OF COMMUNICATIONS CABLE
40. INSTALL OVERSIZED JUNCTION BOX
41. INSTALL BRIDGE MOUNTED JUNCTION BOX
42. INSTALL WOOD POLE
43. REMOVE EXISTING WOOD POLE
44. INSTALL AERIAL GUY ASSEMBLY
45. INSTALL STANDARD GUY ASSEMBLY
46. INSTALL SIDEWALK GUY ASSEMBLY
47. INSTALL MESSENGER CABLE
48. REMOVE EXISTING COMMUNICATIONS CABLE AND MESSENGER CABLE
49. REMOVE EXISTING COMMUNICATIONS CABLE
50. INSTALL REEL END SPLICE
51. INSTALL CABLE STORAGE RACKS (SNOW SHOES) AND STORE 100 FEET OF CABLE
52. INSTALL DELINEATOR MARKER
53. STORE 50 FEET OF COMMUNICATIONS CABLE
54. LASH CABLE(S) TO EXISTING SIGNAL / COMMUNICATIONS CABLE
55. LASH CABLE(S) TO EXISTING MESSENGER CABLE
56. LASH CABLE(S) TO NEW MESSENGER CABLE
57. MODIFY EXISTING ELECTRICAL SERVICE
58. INSTALL NEW ELECTRICAL SERVICE FOR DMS
59. INSTALL NEW BASE MOUNTED CABINET (336)
60. SEAL ALL CONDUIT ENTERING JUNCTION BOXES AND CABINETS WITH MOLDABLE DUCT SEAL
61. INSTALL ETHERNET SWITCH
62. LOCATE EXISTING JUNCTION BOX AND CONNECT WITH NEW CONDUIT
63. BOND MESSENGER CABLE AND RISER TO POLE GROUND

Prepared for the Offices of:
Transportation Mobility and Safety Division
STATE OF NORTH CAROLINA DEPARTMENT OF TRANSPORTATION
Intelligent Transportation Systems Section
750 N. Greenfield Pkwy., Garner, NC 27529

SCALE: NTS

CABLE ROUTING PLANS

DIV 3 BRUNSWICK CO. Near WILMINGTON

PLAN DATE:	January 2018	REVIEWED BY:	G. Green
PREPARED BY:	L. Neal	REVIEWED BY:	P. Marak

REVISIONS	INIT.	DATE

SEAL

PRELIMINARY PLANS
DO NOT USE FOR CONSTRUCTION

SIGNATURE DATE

CADD FILE NAME

PROJECT REFERENCE NO.	SHEET NO.
R-2633D	ITS-25

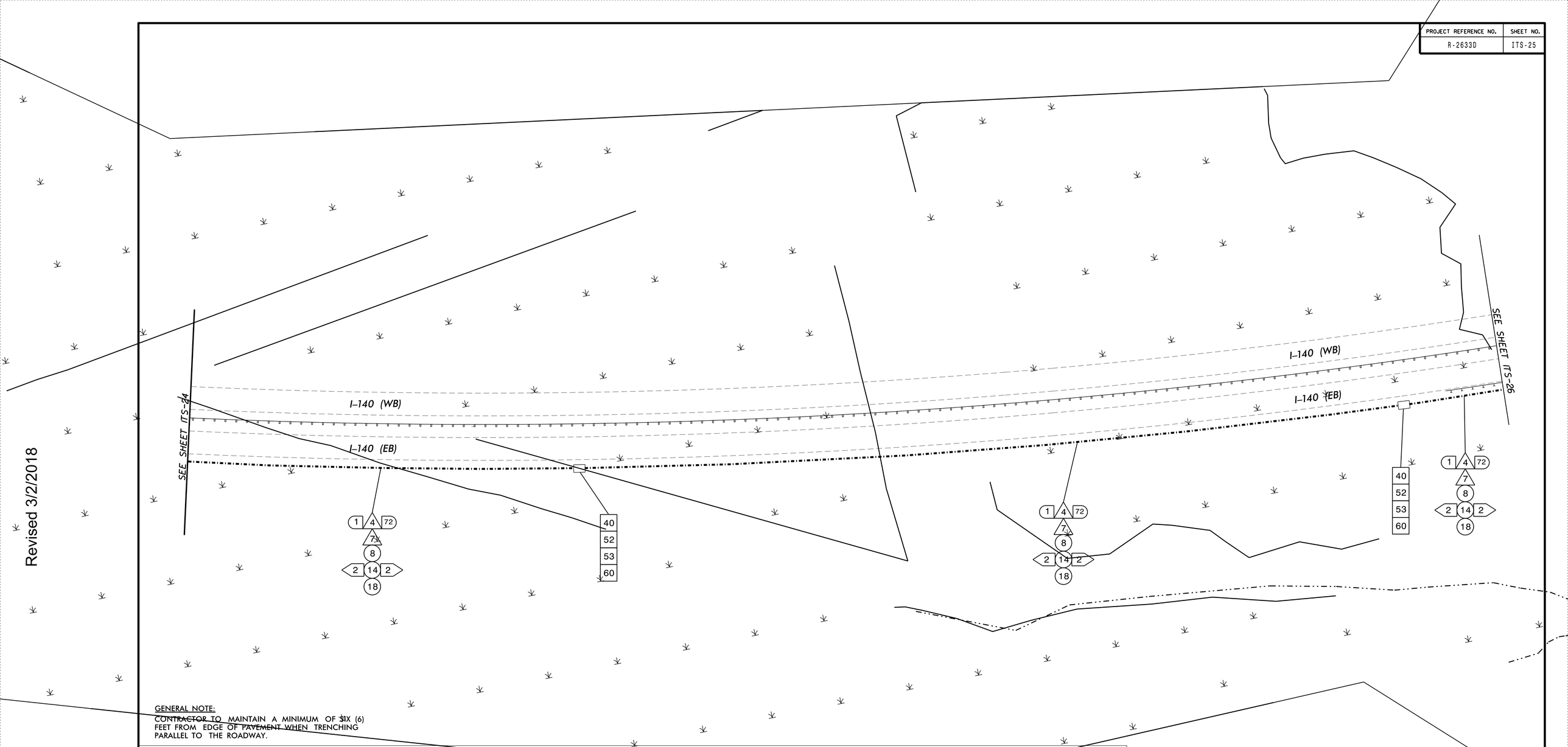

Revised 3/2/2018

GENERAL NOTE:
CONTRACTOR TO MAINTAIN A MINIMUM OF SIX (6) FEET FROM EDGE OF PAVEMENT WHEN TRENCHING PARALLEL TO THE ROADWAY.

1. INSTALL REA, PE – 22, SHIELDED, TWISTED PAIR COMMUNICATIONS CABLE
2. INSTALL REA, PE – 38, (FIGURE – 8) SHIELDED, TWISTED PAIR COMMUNICATIONS CABLE
3. INSTALL 3–CONDUCTOR, CLASS B, STRANDED UNDERGROUND POWER CABLE
4. INSTALL SMFO CABLE
5. INSTALL CAT 5e COMMUNICATIONS CABLE
6. INSTALL FIBER OPTIC DROP CABLE
7. INSTALL TRACER WIRE
8. TRENCH
9. INSTALL PVC CONDUIT
10. INSTALL RIGID, GALVANIZED STEEL CONDUIT
11. INSTALL RIGID, GALVANIZED STEEL RISER WITH WEATHERHEAD
12. INSTALL RIGID, GALVANIZED STEEL RISER WITH FIBER OPTIC CABLE SEAL
13. INSTALL OUTER–DUCT POLYETHYLENE CONDUIT
14. INSTALL POLYETHYLENE CONDUIT
15. DIRECTIONAL DRILL CONDUIT
16. INSTALL BRIDGE MOUNTED FIBERGLASS CONDUIT, WITH FOUR–WAY INNERDUCT INSERT
17. INSTALL CABLE(S) IN EXISTING CONDUIT
18. INSTALL CABLE(S) IN NEW CONDUIT
19. INSTALL CABLE(S) IN EXISTING RISER
20. INSTALL CABLE(S) IN NEW RISER
21. INSTALL CABLE(S) IN EXISTING CONDUIT STUBOUTS
22. INSTALL NEW CONDUIT INTO EXISTING CABINET BASE (USE EXISTING CONDUIT STUB–OUTS WHEN AVAILABLE)
23. INSTALL NEW RISER INTO EXISTING CABINET BASE (USE EXISTING CONDUIT STUB–OUTS WHEN AVAILABLE)
24. INSTALL NEW CONDUIT INTO EXISTING POLE MOUNTED CABINET
25. INSTALL NEW RISER INTO EXISTING POLE MOUNTED CABINET
26. TERMINATE COMMUNICATIONS CABLE ON EXISTING TELEMETRY INTERFACE PANEL IN TRAFFIC SIGNAL CONTROLLER CABINET
27. INSTALL NEW TELEMETRY INTERFACE PANEL IN TRAFFIC SIGNAL CONTROLLER CABINET
28. INSTALL INTERCONNECT CENTER, PATCH PANEL, JUMPERS, AND FUSION SPLICE CABLE IN CABINET
29. INSTALL UNDERGROUND SPLICE ENCLOSURE
30. INSTALL AERIAL SPLICE ENCLOSURE
31. INSTALL POLE MOUNTED SPLICE CABINET
32. INSTALL BASE MOUNTED SPLICE CABINET (336) WITH EXTEND BASE
33. REMOVE EXISTING SPLICE CABINET
34. INSTALL CABINET FOUNDATION
35. REMOVE EXISTING CABINET FOUNDATION
36. INSTALL CCTV CAMERA ASSEMBLY
37. INSTALL CCTV CAMERA WOOD POLE
38. INSTALL CCTV CAMERA METAL POLE AND FOUNDATION
39. INSTALL SPECIAL OVERSIZED JUNCTION BOX WITH 100 FEET OF COMMUNICATIONS CABLE
40. INSTALL OVERSIZED JUNCTION BOX
41. INSTALL BRIDGE MOUNTED JUNCTION BOX
42. INSTALL WOOD POLE
43. REMOVE EXISTING WOOD POLE
44. INSTALL AERIAL GUY ASSEMBLY
45. INSTALL STANDARD GUY ASSEMBLY
46. INSTALL SIDEWALK GUY ASSEMBLY
47. INSTALL MESSENGER CABLE
48. REMOVE EXISTING COMMUNICATIONS CABLE AND MESSENGER CABLE
49. REMOVE EXISTING COMMUNICATIONS CABLE
50. INSTALL REEL END SPLICE
51. INSTALL CABLE STORAGE RACKS (SNOW SHOES) AND STORE 100 FEET OF CABLE
52. INSTALL DELINEATOR MARKER
53. STORE 50 FEET OF COMMUNICATIONS CABLE
54. LASH CABLE(S) TO EXISTING SIGNAL / COMMUNICATIONS CABLE
55. LASH CABLE(S) TO EXISTING MESSENGER CABLE
56. LASH CABLE(S) TO NEW MESSENGER CABLE
57. MODIFY EXISTING ELECTRICAL SERVICE
58. INSTALL NEW ELECTRICAL SERVICE FOR DMS
59. INSTALL NEW BASE MOUNTED CABINET (336)
60. SEAL ALL CONDUIT ENTERING JUNCTION BOXES AND CABINETS WITH MOLDABLE DUCT SEAL
61. INSTALL ETHERNET SWITCH
62. LOCATE EXISTING JUNCTION BOX AND CONNECT WITH NEW CONDUIT
63. BOND MESSENGER CABLE AND RISER TO POLE GROUND

Prepared for the Offices of:
Transportation Mobility and Safety Division
STATE OF NORTH CAROLINA
DEPARTMENT OF TRANSPORTATION
Intermodal Transportation Systems
750 N. Greenfield Pkwy., Garner, NC 27529

CABLE ROUTING PLANS

DIV 3 BRUNSWICK CO. Near WILMINGTON

PLAN DATE:	January 2018	REVIEWED BY:	G. Green
PREPARED BY:	L. Neal	REVIEWED BY:	P. Marak

SCALE: NTS

REVISIONS	INIT.	DATE

SEAL: PRELIMINARY PLANS — DO NOT USE FOR CONSTRUCTION

SIGNATURE | DATE

CADD FILE NAME

PROJECT REFERENCE NO.	SHEET NO.
R-2633D	ITS-26

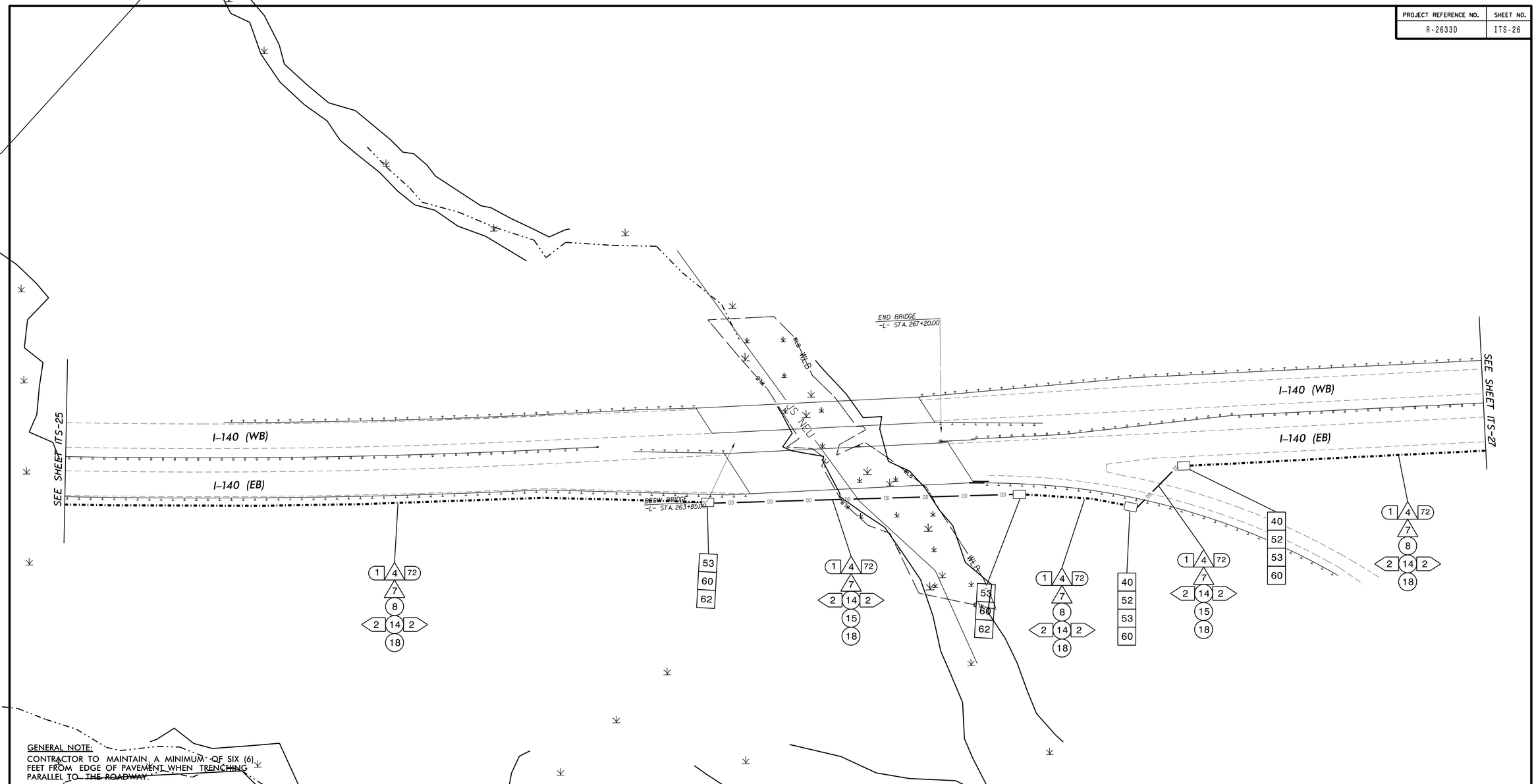

GENERAL NOTE:

CONTRACTOR TO MAINTAIN A MINIMUM OF SIX (6) FEET FROM EDGE OF PAVEMENT WHEN TRENCHING PARALLEL TO THE ROADWAY.

1. INSTALL REA, PE – 22, SHIELDED, TWISTED PAIR COMMUNICATIONS CABLE
2. INSTALL REA, PE – 38, (FIGURE – 8) SHIELDED, TWISTED PAIR COMMUNICATIONS CABLE
3. INSTALL 3–CONDUCTOR, CLASS B, STRANDED UNDERGROUND POWER CABLE
4. INSTALL SMFO CABLE
5. INSTALL CAT 5e COMMUNICATIONS CABLE
6. INSTALL FIBER OPTIC DROP CABLE
7. INSTALL TRACER WIRE
8. TRENCH
9. INSTALL PVC CONDUIT
10. INSTALL RIGID, GALVANIZED STEEL CONDUIT
11. INSTALL RIGID, GALVANIZED STEEL RISER WITH WEATHERHEAD
12. INSTALL RIGID, GALVANIZED STEEL RISER WITH FIBER ORTIC CABLE SEAL
13. INSTALL OUTER–DUCT POLYETHYLENE CONDUIT
14. INSTALL POLYETHYLENE CONDUIT
15. DIRECTIONAL DRILL CONDUIT
16. INSTALL BRIDGE MOUNTED FIBERGLASS CONDUIT, WITH FOUR–WAY INNERDUCT INSERT
17. INSTALL CABLE(S) IN EXISTING CONDUIT
18. INSTALL CABLE(S) IN NEW CONDUIT
19. INSTALL CABLE(S) IN EXISTING RISER
20. INSTALL CABLE(S) IN NEW RISER
21. INSTALL CABLE(S) IN EXISTING CONDUIT STUBOUTS
22. INSTALL NEW CONDUIT INTO EXISTING CABINET BASE (USE EXISTING CONDUIT STUB–OUTS WHEN AVAILABLE)
23. INSTALL NEW RISER INTO EXISTING CABINET BASE (USE EXISTING CONDUIT STUB–OUTS WHEN AVAILABLE)
24. INSTALL NEW CONDUIT INTO EXISTING POLE MOUNTED CABINET
25. INSTALL NEW RISER INTO EXISTING POLE MOUNTED CABINET
26. TERMINATE COMMUNICATIONS CABLE ON EXISTING TELEMETRY INTERFACE PANEL IN TRAFFIC SIGNAL CONTROLLER CABINET
27. INSTALL NEW TELEMETRY INTERFACE PANEL IN TRAFFIC SIGNAL CONTROLLER CABINET
28. INSTALL INTERCONNECT CENTER, PATCH PANEL, JUMPERS, AND FUSION SPLICE CABLE IN CABINET
29. INSTALL UNDERGROUND SPLICE ENCLOSURE
30. INSTALL AERIAL SPLICE ENCLOSURE
31. INSTALL POLE MOUNTED SPLICE CABINET
32. INSTALL BASE MOUNTED SPLICE CABINET (336) WITH EXTEND BASE
33. REMOVE EXISTING SPLICE CABINET
34. INSTALL CABINET FOUNDATION
35. REMOVE EXISTING CABINET FOUNDATION
36. INSTALL CCTV CAMERA ASSEMBLY
37. INSTALL CCTV CAMERA WOOD POLE
38. INSTALL CCTV CAMERA METAL POLE AND FOUNDATION
39. INSTALL SPECIAL OVERSIZED JUNCTION BOX WITH 100 FEET OF COMMUNICATIONS CABLE
40. INSTALL OVERSIZED JUNCTION BOX
41. INSTALL BRIDGE MOUNTED JUNCTION BOX
42. INSTALL WOOD POLE
43. REMOVE EXISTING WOOD POLE
44. INSTALL AERIAL GUY ASSEMBLY
45. INSTALL STANDARD GUY ASSEMBLY
46. INSTALL SIDEWALK GUY ASSEMBLY
47. INSTALL MESSENGER CABLE
48. REMOVE EXISTING COMMUNICATIONS CABLE AND MESSENGER CABLE
49. REMOVE EXISTING COMMUNICATIONS CABLE
50. INSTALL REEL END SPLICE
51. INSTALL CABLE STORAGE RACKS (SNOW SHOES) AND STORE 100 FEET OF CABLE
52. INSTALL DELINEATOR MARKER
53. STORE 50 FEET OF COMMUNICATIONS CABLE
54. LASH CABLE(S) TO EXISTING SIGNAL / COMMUNICATIONS CABLE
55. LASH CABLE(S) TO EXISTING MESSENGER CABLE
56. LASH CABLE(S) TO NEW MESSENGER CABLE
57. MODIFY EXISTING ELECTRICAL SERVICE
58. INSTALL NEW ELECTRICAL SERVICE FOR DMS
59. INSTALL NEW BASE MOUNTED CABINET (336)
60. SEAL ALL CONDUIT ENTERING JUNCTION BOXES AND CABINETS WITH MOLDABLE DUCT SEAL
61. INSTALL ETHERNET SWITCH
62. LOCATE EXISTING JUNCTION BOX AND CONNECT WITH NEW CONDUIT
63. BOND MESSENGER CABLE AND RISER TO POLE GROUND

Revised 3/2/2018

Prepared for the Offices of:

Mobility and Safety Division
Transportation Management Unit
Intelligent Transportation Systems
STATE OF NORTH CAROLINA DEPARTMENT OF TRANSPORTATION

750 N. Greenfield Pkwy., Garner, NC 27529

N

SCALE: NTS

CABLE ROUTING PLANS

DIV 3 BRUNSWICK CO. Near WILMINGTON

PLAN DATE:	January 2018	REVIEWED BY:	G. Green
PREPARED BY:	L. Neal	REVIEWED BY:	P. Marak

REVISIONS	INIT.	DATE

SEAL

PRELIMINARY PLANS
DO NOT USE FOR CONSTRUCTION

SIGNATURE DATE

CADD FILE NAME

PROJECT REFERENCE NO.	SHEET NO.
R-2633D	ITS-27

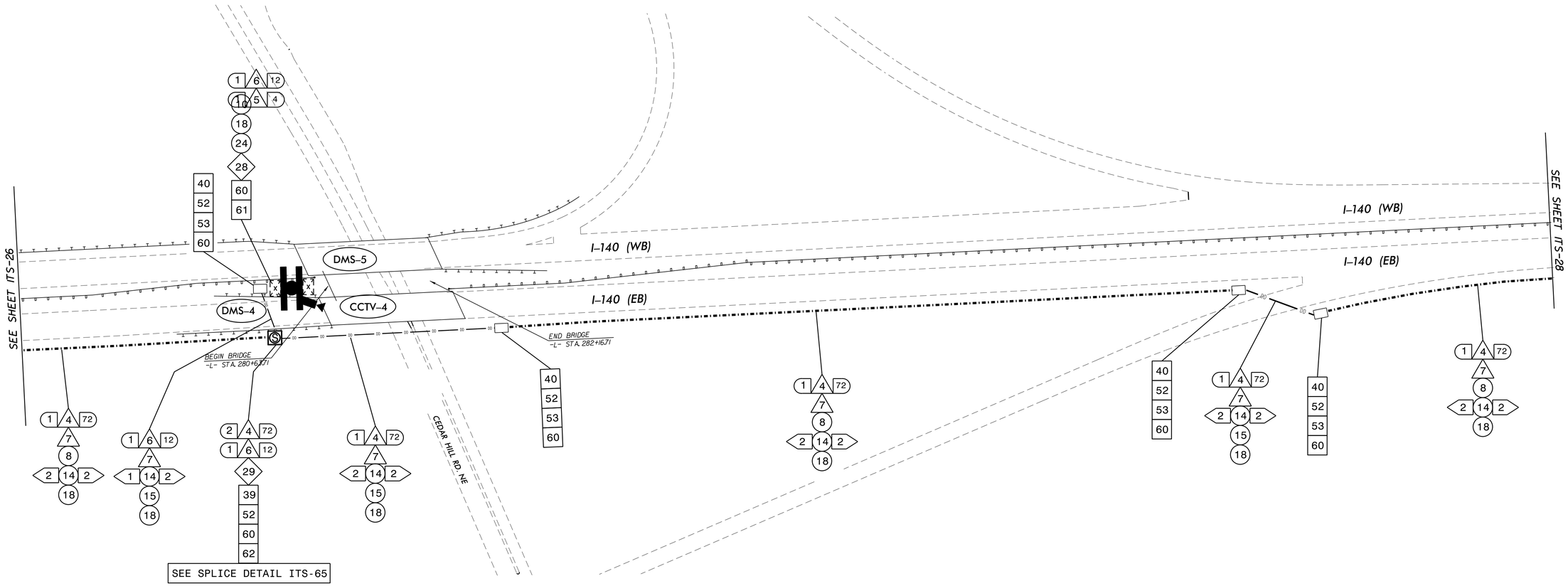

GENERAL NOTE:

CONTRACTOR TO MAINTAIN A MINIMUM OF SIX (6) FEET FROM EDGE OF PAVEMENT WHEN TRENCHING PARALLEL TO THE ROADWAY.

1. INSTALL REA, PE – 22, SHIELDED, TWISTED PAIR COMMUNICATIONS CABLE
2. INSTALL REA, PE – 38, (FIGURE – 8) SHIELDED, TWISTED PAIR COMMUNICATIONS CABLE
3. INSTALL 3-CONDUCTOR, CLASS B, STRANDED UNDERGROUND POWER CABLE
4. INSTALL SMFO CABLE
5. INSTALL CAT 5e COMMUNICATIONS CABLE
6. INSTALL FIBER OPTIC DROP CABLE
7. INSTALL TRACER WIRE
8. TRENCH
9. INSTALL PVC CONDUIT
10. INSTALL RIGID, GALVANIZED STEEL CONDUIT
11. INSTALL RIGID, GALVANIZED STEEL RISER WITH WEATHERHEAD
12. INSTALL RIGID, GALVANIZED STEEL RISER WITH FIBER OPTIC CABLE SEAL
13. INSTALL OUTER-DUCT POLYETHYLENE CONDUIT
14. INSTALL POLYETHYLENE CONDUIT
15. DIRECTIONAL DRILL CONDUIT
16. INSTALL BRIDGE MOUNTED FIBERGLASS CONDUIT, WITH FOUR-WAY INNERDUCT INSERT
17. INSTALL CABLE(S) IN EXISTING CONDUIT
18. INSTALL CABLE(S) IN NEW CONDUIT
19. INSTALL CABLE(S) IN EXISTING RISER
20. INSTALL CABLE(S) IN NEW RISER
21. INSTALL CABLE(S) IN EXISTING CONDUIT STUBOUTS
22. INSTALL NEW CONDUIT INTO EXISTING CABINET BASE (USE EXISTING CONDUIT STUB-OUTS WHEN AVAILABLE)
23. INSTALL NEW RISER INTO EXISTING CABINET BASE (USE EXISTING CONDUIT STUB-OUTS WHEN AVAILABLE)
24. INSTALL NEW CONDUIT INTO EXISTING POLE MOUNTED CABINET
25. INSTALL NEW RISER INTO EXISTING POLE MOUNTED CABINET
26. TERMINATE COMMUNICATIONS CABLE ON EXISTING TELEMETRY INTERFACE PANEL IN TRAFFIC SIGNAL CONTROLLER CABINET
27. INSTALL NEW TELEMETRY INTERFACE PANEL IN TRAFFIC SIGNAL CONTROLLER CABINET
28. INSTALL INTERCONNECT CENTER, PATCH PANEL, JUMPERS, AND FUSION SPLICE CABLE IN CABINET
29. INSTALL UNDERGROUND SPLICE ENCLOSURE
30. INSTALL AERIAL SPLICE ENCLOSURE
31. INSTALL POLE MOUNTED SPLICE CABINET
32. INSTALL BASE MOUNTED SPLICE CABINET (336) WITH EXTEND BASE
33. REMOVE EXISTING SPLICE CABINET
34. INSTALL CABINET FOUNDATION
35. REMOVE EXISTING CABINET FOUNDATION
36. INSTALL CCTV CAMERA ASSEMBLY
37. INSTALL CCTV CAMERA WOOD POLE
38. INSTALL CCTV CAMERA METAL POLE AND FOUNDATION
39. INSTALL SPECIAL OVERSIZED JUNCTION BOX WITH 100 FEET OF COMMUNICATIONS CABLE
40. INSTALL OVERSIZED JUNCTION BOX
41. INSTALL BRIDGE MOUNTED JUNCTION BOX
42. INSTALL WOOD POLE
43. REMOVE EXISTING WOOD POLE
44. INSTALL AERIAL GUY ASSEMBLY
45. INSTALL STANDARD GUY ASSEMBLY
46. INSTALL SIDEWALK GUY ASSEMBLY
47. INSTALL MESSENGER CABLE
48. REMOVE EXISTING COMMUNICATIONS CABLE AND MESSENGER CABLE
49. REMOVE EXISTING COMMUNICATIONS CABLE
50. INSTALL REEL END SPLICE
51. INSTALL CABLE STORAGE RACKS (SNOW SHOES) AND STORE 100 FEET OF CABLE
52. INSTALL DELINEATOR MARKER
53. STORE 50 FEET OF COMMUNICATIONS CABLE
54. LASH CABLE(S) TO EXISTING SIGNAL / COMMUNICATIONS CABLE
55. LASH CABLE(S) TO EXISTING MESSENGER CABLE
56. LASH CABLE(S) TO NEW MESSENGER CABLE
57. MODIFY EXISTING ELECTRICAL SERVICE
58. INSTALL NEW ELECTRICAL SERVICE FOR DMS
59. INSTALL NEW BASE MOUNTED CABINET (336)
60. SEAL ALL CONDUIT ENTERING JUNCTION BOXES AND CABINETS WITH MOLDABLE DUCT SEAL
61. INSTALL ETHERNET SWITCH
62. LOCATE EXISTING JUNCTION BOX AND CONNECT WITH NEW CONDUIT
63. BOND MESSENGER CABLE AND RISER TO POLE GROUND

Prepared for the Offices of:

STATE OF NORTH CAROLINA DEPARTMENT OF TRANSPORTATION
Transportation Mobility and Safety Division
Intelligent Transportation Systems

750 N. Greenfield Pkwy., Garner, NC 27529

CABLE ROUTING PLANS

DIV 3 BRUNSWICK CO. Near WILMINGTON

PLAN DATE:	January 2018	REVIEWED BY:	G. Green
PREPARED BY:	L. Neal	REVIEWED BY:	P. Marak

SCALE: NTS

REVISIONS	INIT.	DATE

SEAL

PRELIMINARY PLANS
DO NOT USE FOR CONSTRUCTION

SIGNATURE DATE

CADD FILE NAME

Revised 3/2/2018

Revised 3/2/2018

PROJECT REFERENCE NO.	SHEET NO.
R-2633D	ITS-28

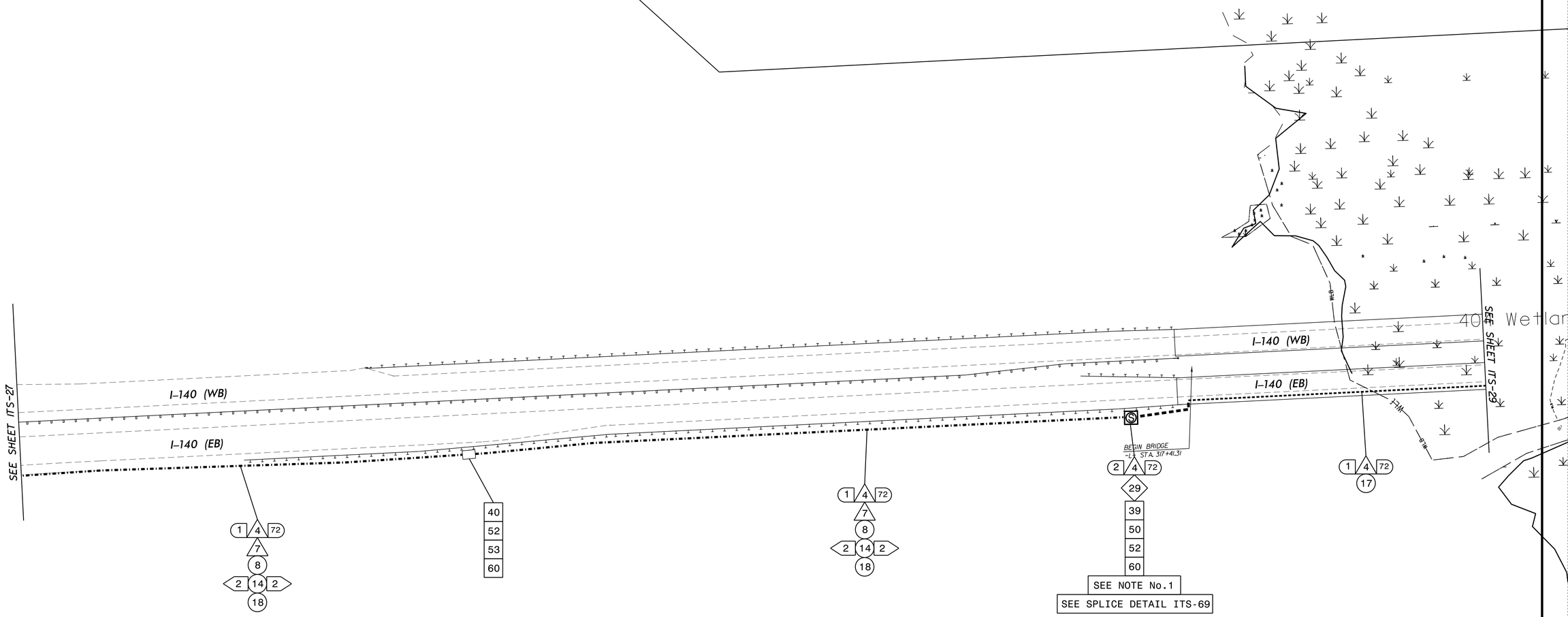

NOTE No.1 CONTRACTOR SHALL LOCATE EXISTING JUNCTION BOX AND REPLACE WITH A NEW SPECIAL OVERSIZE JUNCTION BOX TO ACCOMMODATE NEW SPLICE ENCLOSURE.

GENERAL NOTE:

CONTRACTOR TO MAINTAIN A MINIMUM OF SIX (6) FEET FROM EDGE OF PAVEMENT WHEN TRENCHING PARALLEL TO THE ROADWAY.

1. INSTALL REA, PE – 22, SHIELDED, TWISTED PAIR COMMUNICATIONS CABLE
2. INSTALL REA, PE – 38, (FIGURE – 8) SHIELDED, TWISTED PAIR COMMUNICATIONS CABLE
3. INSTALL 3–CONDUCTOR, CLASS B, STRANDED UNDERGROUND POWER CABLE
4. INSTALL SMFO CABLE
5. INSTALL CAT 5e COMMUNICATIONS CABLE
6. INSTALL FIBER OPTIC DROP CABLE
7. INSTALL TRACER WIRE
8. TRENCH
9. INSTALL PVC CONDUIT
10. INSTALL RIGID, GALVANIZED STEEL CONDUIT
11. INSTALL RIGID, GALVANIZED STEEL RISER WITH WEATHERHEAD
12. INSTALL RIGID, GALVANIZED STEEL RISER WITH FIBER OPTIC CABLE SEAL
13. INSTALL OUTER–DUCT POLYETHYLENE CONDUIT
14. INSTALL POLYETHYLENE CONDUIT
15. DIRECTIONAL DRILL CONDUIT
16. INSTALL BRIDGE MOUNTED FIBERGLASS CONDUIT, WITH FOUR–WAY INNERDUCT INSERT
17. INSTALL CABLE(S) IN EXISTING CONDUIT
18. INSTALL CABLE(S) IN NEW CONDUIT
19. INSTALL CABLE(S) IN EXISTING RISER
20. INSTALL CABLE(S) IN NEW RISER
21. INSTALL CABLE(S) IN EXISTING CONDUIT STUBOUTS
22. INSTALL NEW CONDUIT INTO EXISTING CABINET BASE (USE EXISTING CONDUIT STUB–OUTS WHEN AVAILABLE)
23. INSTALL NEW RISER INTO EXISTING CABINET BASE (USE EXISTING CONDUIT STUB–OUTS WHEN AVAILABLE)
24. INSTALL NEW CONDUIT INTO EXISTING POLE MOUNTED CABINET
25. INSTALL NEW RISER INTO EXISTING POLE MOUNTED CABINET
26. TERMINATE COMMUNICATIONS CABLE ON EXISTING TELEMETRY INTERFACE PANEL IN TRAFFIC SIGNAL CONTROLLER CABINET
27. INSTALL NEW TELEMETRY INTERFACE PANEL IN TRAFFIC SIGNAL CONTROLLER CABINET
28. INSTALL INTERCONNECT CENTER, PATCH PANEL, JUMPERS, AND FUSION SPLICE CABLE IN CABINET
29. INSTALL UNDERGROUND SPLICE ENCLOSURE
30. INSTALL AERIAL SPLICE ENCLOSURE
31. INSTALL POLE MOUNTED SPLICE CABINET
32. INSTALL BASE MOUNTED SPLICE CABINET (336) WITH EXTEND BASE
33. REMOVE EXISTING SPLICE CABINET
34. INSTALL CABINET FOUNDATION
35. REMOVE EXISTING CABINET FOUNDATION
36. INSTALL CCTV CAMERA ASSEMBLY
37. INSTALL CCTV CAMERA WOOD POLE
38. INSTALL CCTV CAMERA METAL POLE AND FOUNDATION
39. INSTALL SPECIAL OVERSIZED JUNCTION BOX WITH 100 FEET OF COMMUNICATIONS CABLE
40. INSTALL OVERSIZED JUNCTION BOX
41. INSTALL BRIDGE MOUNTED JUNCTION BOX
42. INSTALL WOOD POLE
43. REMOVE EXISTING WOOD POLE
44. INSTALL AERIAL GUY ASSEMBLY
45. INSTALL STANDARD GUY ASSEMBLY
46. INSTALL SIDEWALK GUY ASSEMBLY
47. INSTALL MESSENGER CABLE
48. REMOVE EXISTING COMMUNICATIONS CABLE AND MESSENGER CABLE
49. REMOVE EXISTING COMMUNICATIONS CABLE
50. INSTALL REEL END SPLICE
51. INSTALL CABLE STORAGE RACKS (SNOW SHOES) AND STORE 100 FEET OF CABLE
52. INSTALL DELINEATOR MARKER
53. STORE 50 FEET OF COMMUNICATIONS CABLE
54. LASH CABLE(S) TO EXISTING SIGNAL / COMMUNICATIONS CABLE
55. LASH CABLE(S) TO EXISTING MESSENGER CABLE
56. LASH CABLE(S) TO NEW MESSENGER CABLE
57. MODIFY EXISTING ELECTRICAL SERVICE
58. INSTALL NEW ELECTRICAL SERVICE FOR DMS
59. INSTALL NEW BASE MOUNTED CABINET (336)
60. SEAL ALL CONDUIT ENTERING JUNCTION BOXES AND CABINETS WITH MOLDABLE DUCT SEAL
61. INSTALL ETHERNET SWITCH
62. LOCATE EXISTING JUNCTION BOX AND CONNECT WITH NEW CONDUIT
63. BOND MESSENGER CABLE AND RISER TO POLE GROUND

Prepared for the Offices of:

STATE OF NORTH CAROLINA DEPARTMENT OF TRANSPORTATION

750 N. Greenfield Pkwy., Garner, NC 27529

SCALE: NTS

CABLE ROUTING PLANS

DIV 3 BRUNSWICK CO. Near WILMINGTON

PLAN DATE:	January 2018	REVIEWED BY:	G. Green
PREPARED BY:	L. Neal	REVIEWED BY:	P. Marak

REVISIONS	INIT.	DATE

SEAL

PRELIMINARY PLANS
DO NOT USE FOR CONSTRUCTION

SIGNATURE DATE

CADD FILE NAME

PROJECT REFERENCE NO.	SHEET NO.
R-2633D	ITS-29

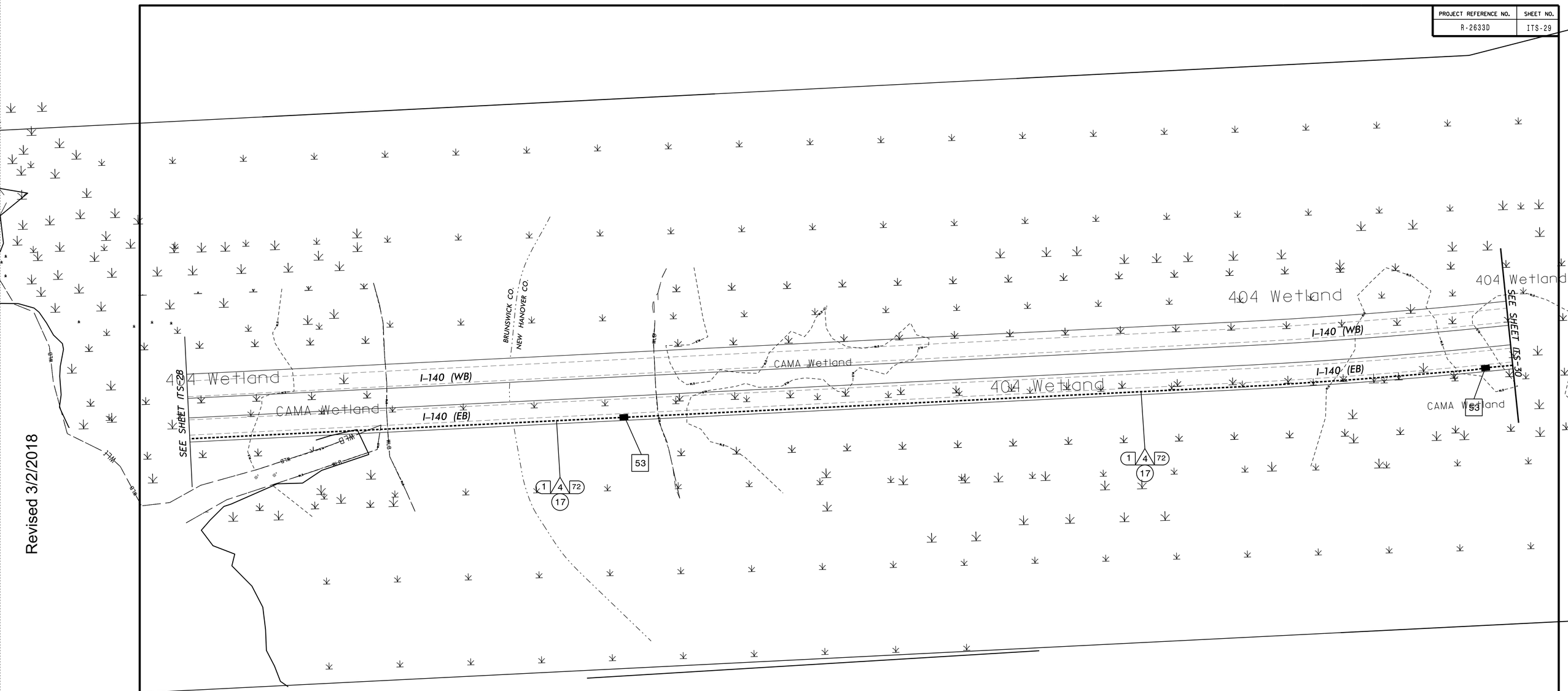

Revised 3/2/2018

GENERAL NOTE:

CONTRACTOR TO MAINTAIN A MINIMUM OF SIX (6) FEET FROM EDGE OF PAVEMENT WHEN TRENCHING PARALLEL TO THE ROADWAY.

1. INSTALL REA, PE – 22, SHIELDED, TWISTED PAIR COMMUNICATIONS CABLE
2. INSTALL REA, PE – 38, (FIGURE – 8) SHIELDED, TWISTED PAIR COMMUNICATIONS CABLE
3. INSTALL 3-CONDUCTOR, CLASS B, STRANDED UNDERGROUND POWER CABLE
4. INSTALL SMFO CABLE
5. INSTALL CAT 5e COMMUNICATIONS CABLE
6. INSTALL FIBER OPTIC DROP CABLE
7. INSTALL TRACER WIRE
8. TRENCH
9. INSTALL PVC CONDUIT
10. INSTALL RIGID, GALVANIZED STEEL CONDUIT
11. INSTALL RIGID, GALVANIZED STEEL RISER WITH WEATHERHEAD
12. INSTALL RIGID, GALVANIZED STEEL RISER WITH FIBER OPTIC CABLE SEAL
13. INSTALL OUTER-DUCT POLYETHYLENE CONDUIT
14. INSTALL POLYETHYLENE CONDUIT
15. DIRECTIONAL DRILL CONDUIT
16. INSTALL BRIDGE MOUNTED FIBERGLASS CONDUIT, WITH FOUR-WAY INNERDUCT INSERT
17. INSTALL CABLE(S) IN EXISTING CONDUIT
18. INSTALL CABLE(S) IN NEW CONDUIT
19. INSTALL CABLE(S) IN EXISTING RISER
20. INSTALL CABLE(S) IN NEW RISER
21. INSTALL CABLE(S) IN EXISTING CONDUIT STUBOUTS
22. INSTALL NEW CONDUIT INTO EXISTING CABINET BASE (USE EXISTING CONDUIT STUB-OUTS WHEN AVAILABLE)
23. INSTALL NEW RISER INTO EXISTING CABINET BASE (USE EXISTING CONDUIT STUB-OUTS WHEN AVAILABLE)
24. INSTALL NEW CONDUIT INTO EXISTING POLE MOUNTED CABINET
25. INSTALL NEW RISER INTO EXISTING POLE MOUNTED CABINET
26. TERMINATE COMMUNICATIONS CABLE ON EXISTING TELEMETRY INTERFACE PANEL IN TRAFFIC SIGNAL CONTROLLER CABINET
27. INSTALL NEW TELEMETRY INTERFACE PANEL IN TRAFFIC SIGNAL CONTROLLER CABINET
28. INSTALL INTERCONNECT CENTER, PATCH PANEL, JUMPERS, AND FUSION SPLICE CABLE IN CABINET
29. INSTALL UNDERGROUND SPLICE ENCLOSURE
30. INSTALL AERIAL SPLICE ENCLOSURE
31. INSTALL POLE MOUNTED SPLICE CABINET
32. INSTALL BASE MOUNTED SPLICE CABINET (336) WITH EXTEND BASE
33. REMOVE EXISTING SPLICE CABINET
34. INSTALL CABINET FOUNDATION
35. REMOVE EXISTING CABINET FOUNDATION
36. INSTALL CCTV CAMERA ASSEMBLY
37. INSTALL CCTV CAMERA WOOD POLE
38. INSTALL CCTV CAMERA METAL POLE AND FOUNDATION
39. INSTALL SPECIAL OVERSIZED JUNCTION BOX WITH 100 FEET OF COMMUNICATIONS CABLE
40. INSTALL OVERSIZED JUNCTION BOX
41. INSTALL BRIDGE MOUNTED JUNCTION BOX
42. INSTALL WOOD POLE
43. REMOVE EXISTING WOOD POLE
44. INSTALL AERIAL GUY ASSEMBLY
45. INSTALL STANDARD GUY ASSEMBLY
46. INSTALL SIDEWALK GUY ASSEMBLY
47. INSTALL MESSENGER CABLE
48. REMOVE EXISTING COMMUNICATIONS CABLE AND MESSENGER CABLE
49. REMOVE EXISTING COMMUNICATIONS CABLE
50. INSTALL REEL END SPLICE
51. INSTALL CABLE STORAGE RACKS (SNOW SHOES) AND STORE 100 FEET OF CABLE
52. INSTALL DELINEATOR MARKER
53. STORE 50 FEET OF COMMUNICATIONS CABLE
54. LASH CABLE(S) TO EXISTING SIGNAL / COMMUNICATIONS CABLE
55. LASH CABLE(S) TO EXISTING MESSENGER CABLE
56. LASH CABLE(S) TO NEW MESSENGER CABLE
57. MODIFY EXISTING ELECTRICAL SERVICE
58. INSTALL NEW ELECTRICAL SERVICE FOR DMS
59. INSTALL NEW BASE MOUNTED CABINET (336)
60. SEAL ALL CONDUIT ENTERING JUNCTION BOXES AND CABINETS WITH MOLDABLE DUCT SEAL
61. INSTALL ETHERNET SWITCH
62. LOCATE EXISTING JUNCTION BOX AND CONNECT WITH NEW CONDUIT
63. BOND MESSENGER CABLE AND RISER TO POLE GROUND

Prepared for the Offices of:

STATE OF NORTH CAROLINA DEPARTMENT OF TRANSPORTATION
Transportation Mobility and Safety Division
Intelligent Transportation Systems

750 N. Greenfield Pkwy., Garner, NC 27529

N

SCALE: NTS

CABLE ROUTING PLANS

NEW HANOVER CO./
DIV 3 BRUNSWICK CO. Near WILMINGTON

PLAN DATE:	January 2018	REVIEWED BY:	G. Green
PREPARED BY:	L. Neal	REVIEWED BY:	P. Marak

REVISIONS	INIT.	DATE

SEAL

PRELIMINARY PLANS
DO NOT USE FOR CONSTRUCTION

SIGNATURE DATE

CADD FILE NAME

PROJECT REFERENCE NO.	SHEET NO.
R-2633D	ITS-30

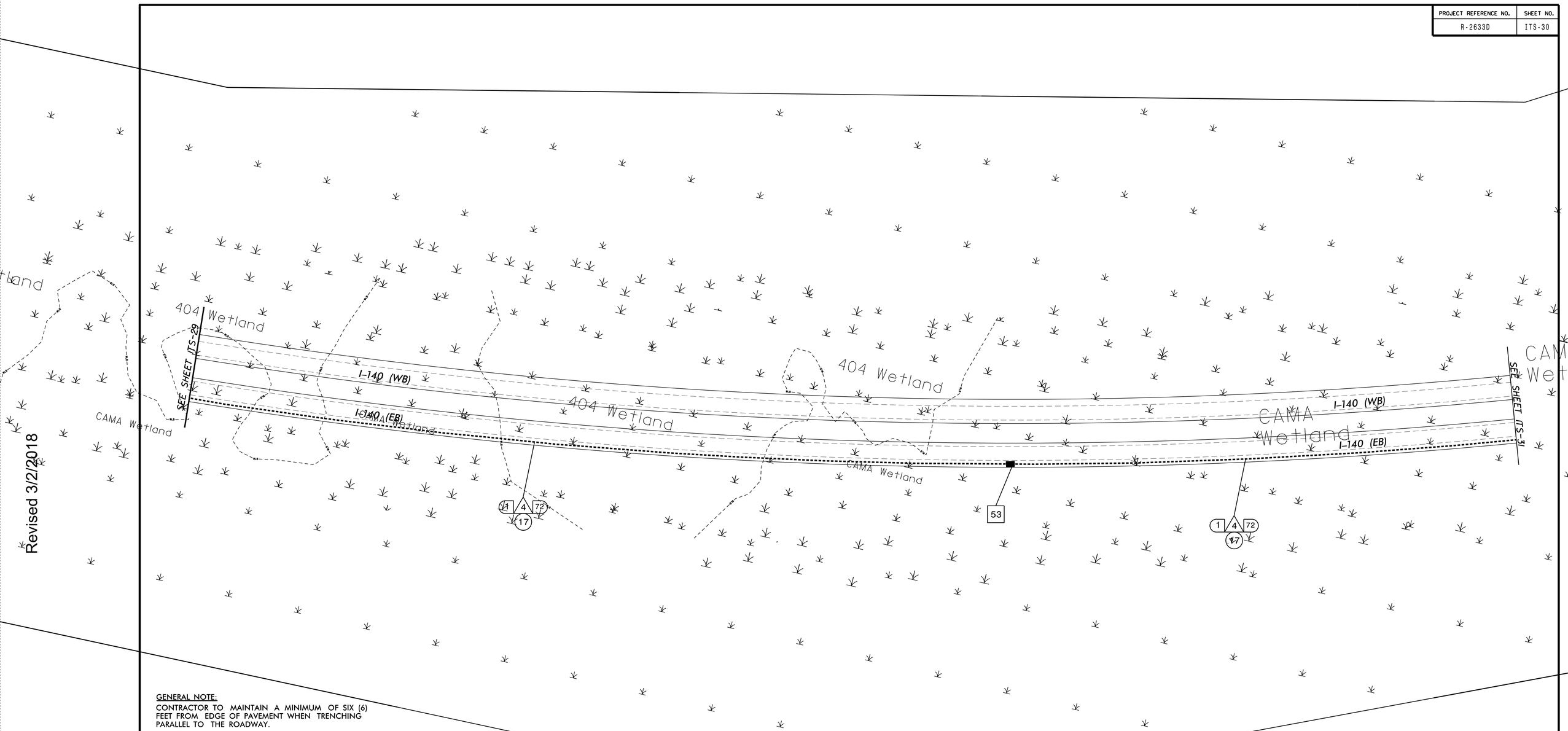

GENERAL NOTE:

CONTRACTOR TO MAINTAIN A MINIMUM OF SIX (6) FEET FROM EDGE OF PAVEMENT WHEN TRENCHING PARALLEL TO THE ROADWAY.

1. INSTALL REA, PE – 22, SHIELDED, TWISTED PAIR COMMUNICATIONS CABLE
2. INSTALL REA, PE – 38, (FIGURE – 8) SHIELDED, TWISTED PAIR COMMUNICATIONS CABLE
3. INSTALL 3-CONDUCTOR, CLASS B, STRANDED UNDERGROUND POWER CABLE
4. INSTALL SMFO CABLE
5. INSTALL CAT 5e COMMUNICATIONS CABLE
6. INSTALL FIBER OPTIC DROP CABLE
7. INSTALL TRACER WIRE
8. TRENCH
9. INSTALL PVC CONDUIT
10. INSTALL RIGID, GALVANIZED STEEL CONDUIT
11. INSTALL RIGID, GALVANIZED STEEL RISER WITH WEATHERHEAD
12. INSTALL RIGID, GALVANIZED STEEL RISER WITH FIBER OPTIC CABLE SEAL
13. INSTALL OUTER-DUCT POLYETHYLENE CONDUIT
14. INSTALL POLYETHYLENE CONDUIT
15. DIRECTIONAL DRILL CONDUIT
16. INSTALL BRIDGE MOUNTED FIBERGLASS CONDUIT, WITH FOUR-WAY INNERDUCT INSERT
17. INSTALL CABLE(S) IN EXISTING CONDUIT
18. INSTALL CABLE(S) IN NEW CONDUIT
19. INSTALL CABLE(S) IN EXISTING RISER
20. INSTALL CABLE(S) IN NEW RISER
21. INSTALL CABLE(S) IN EXISTING CONDUIT STUBOUTS
22. INSTALL NEW CONDUIT INTO EXISTING CABINET BASE (USE EXISTING CONDUIT STUB-OUTS WHEN AVAILABLE)
23. INSTALL NEW RISER INTO EXISTING CABINET BASE (USE EXISTING CONDUIT STUB-OUTS WHEN AVAILABLE)
24. INSTALL NEW CONDUIT INTO EXISTING POLE MOUNTED CABINET
25. INSTALL NEW RISER INTO EXISTING POLE MOUNTED CABINET
26. TERMINATE COMMUNICATIONS CABLE ON EXISTING TELEMETRY INTERFACE PANEL IN TRAFFIC SIGNAL CONTROLLER CABINET
27. INSTALL NEW TELEMETRY INTERFACE PANEL IN TRAFFIC SIGNAL CONTROLLER CABINET
28. INSTALL INTERCONNECT CENTER, PATCH PANEL, JUMPERS, AND FUSION SPLICE CABLE IN CABINET
29. INSTALL UNDERGROUND SPLICE ENCLOSURE
30. INSTALL AERIAL SPLICE ENCLOSURE
31. INSTALL POLE MOUNTED SPLICE CABINET
32. INSTALL BASE MOUNTED SPLICE CABINET (336) WITH EXTEND BASE
33. REMOVE EXISTING SPLICE CABINET
34. INSTALL CABINET FOUNDATION
35. REMOVE EXISTING CABINET FOUNDATION
36. INSTALL CCTV CAMERA ASSEMBLY
37. INSTALL CCTV CAMERA WOOD POLE
38. INSTALL CCTV CAMERA METAL POLE AND FOUNDATION
39. INSTALL SPECIAL OVERSIZED JUNCTION BOX WITH 100 FEET OF COMMUNICATIONS CABLE
40. INSTALL OVERSIZED JUNCTION BOX
41. INSTALL BRIDGE MOUNTED JUNCTION BOX
42. INSTALL WOOD POLE
43. REMOVE EXISTING WOOD POLE
44. INSTALL AERIAL GUY ASSEMBLY
45. INSTALL STANDARD GUY ASSEMBLY
46. INSTALL SIDEWALK GUY ASSEMBLY
47. INSTALL MESSENGER CABLE
48. REMOVE EXISTING COMMUNICATIONS CABLE AND MESSENGER CABLE
49. REMOVE EXISTING COMMUNICATIONS CABLE
50. INSTALL REEL END SPLICE
51. INSTALL CABLE STORAGE RACKS (SNOW SHOES) AND STORE 100 FEET OF CABLE
52. INSTALL DELINEATOR MARKER
53. STORE 50 FEET OF COMMUNICATIONS CABLE
54. LASH CABLE(S) TO EXISTING SIGNAL / COMMUNICATIONS CABLE
55. LASH CABLE(S) TO EXISTING MESSENGER CABLE
56. LASH CABLE(S) TO NEW MESSENGER CABLE
57. MODIFY EXISTING ELECTRICAL SERVICE
58. INSTALL NEW ELECTRICAL SERVICE FOR DMS
59. INSTALL NEW BASE MOUNTED CABINET (336)
60. SEAL ALL CONDUIT ENTERING JUNCTION BOXES AND CABINETS WITH MOLDABLE DUCT SEAL
61. INSTALL ETHERNET SWITCH
62. LOCATE EXISTING JUNCTION BOX AND CONNECT WITH NEW CONDUIT
63. BOND MESSENGER CABLE AND RISER TO POLE GROUND

Prepared for the Offices of:

Transportation Mobility and Safety Division
Intermodal Transportation Systems Section
STATE OF NORTH CAROLINA DEPARTMENT OF TRANSPORTATION

750 N. Greenfield Pkwy., Garner, NC 27529

SCALE: NTS

CABLE ROUTING PLANS

DIV 3 NEW HANOVER CO. Near WILMINGTON

PLAN DATE: January 2018		REVIEWED BY:	G. Green
PREPARED BY:	L. Neal	REVIEWED BY:	P. Marak

REVISIONS	INIT.	DATE

SEAL

PRELIMINARY PLANS
DO NOT USE FOR CONSTRUCTION

SIGNATURE DATE

CADD FILE NAME

Revised 3/2/2018

PROJECT REFERENCE NO.	SHEET NO.
R-2633D	ITS-31

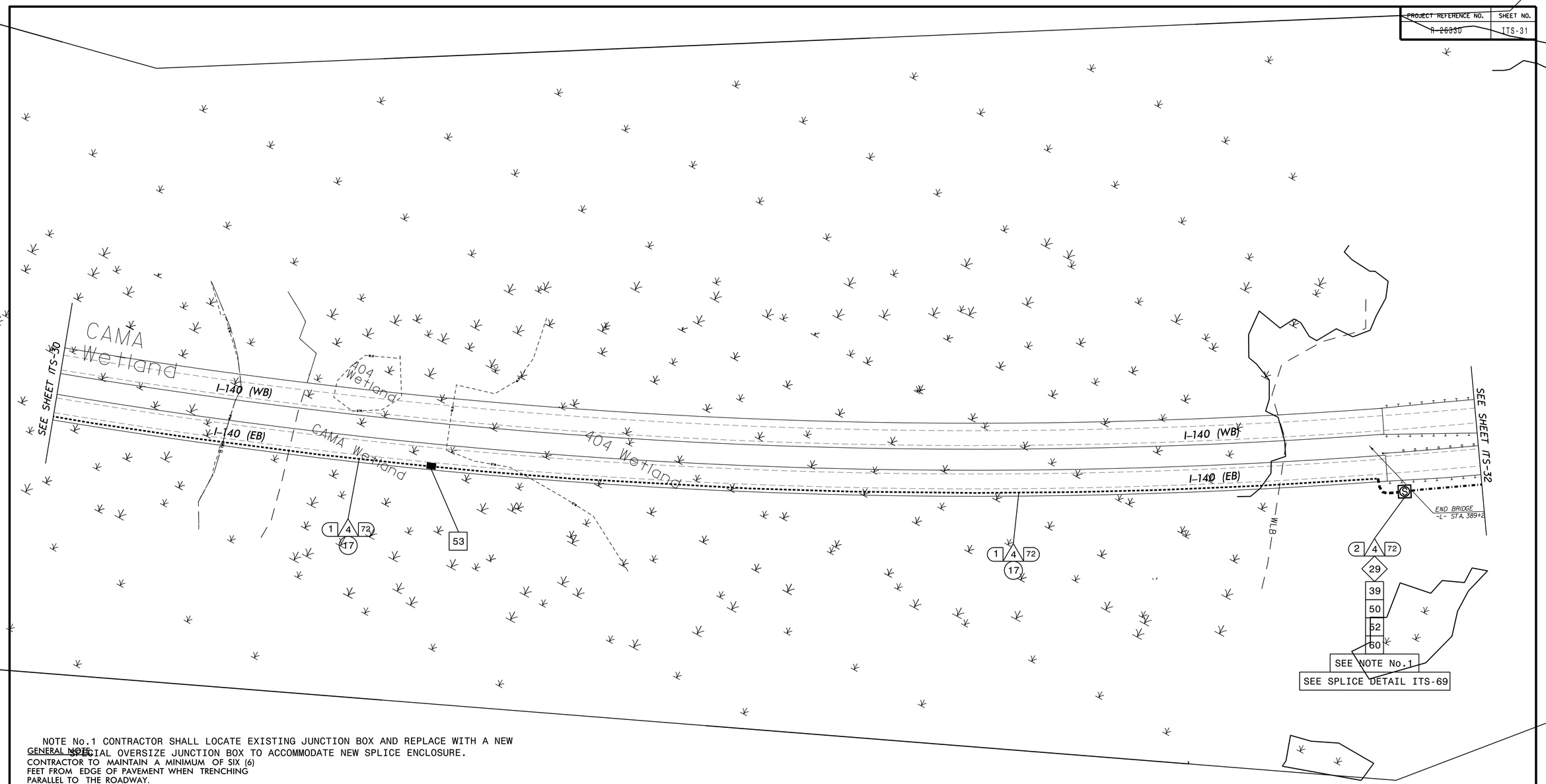

Revised 3/2/2018

NOTE No.1 CONTRACTOR SHALL LOCATE EXISTING JUNCTION BOX AND REPLACE WITH A NEW SPECIAL OVERSIZE JUNCTION BOX TO ACCOMMODATE NEW SPLICE ENCLOSURE.

GENERAL NOTE:
CONTRACTOR TO MAINTAIN A MINIMUM OF SIX (6) FEET FROM EDGE OF PAVEMENT WHEN TRENCHING PARALLEL TO THE ROADWAY.

1. INSTALL REA, PE – 22, SHIELDED, TWISTED PAIR COMMUNICATIONS CABLE
2. INSTALL REA, PE – 38, (FIGURE – 8) SHIELDED, TWISTED PAIR COMMUNICATIONS CABLE
3. INSTALL 3-CONDUCTOR, CLASS B, STRANDED UNDERGROUND POWER CABLE
4. INSTALL SMFO CABLE
5. INSTALL CAT 5e COMMUNICATIONS CABLE
6. INSTALL FIBER OPTIC DROP CABLE
7. INSTALL TRACER WIRE
8. TRENCH
9. INSTALL PVC CONDUIT
10. INSTALL RIGID, GALVANIZED STEEL CONDUIT
11. INSTALL RIGID, GALVANIZED STEEL RISER WITH WEATHERHEAD
12. INSTALL RIGID, GALVANIZED STEEL RISER WITH FIBER OPTIC CABLE SEAL
13. INSTALL OUTER-DUCT POLYETHYLENE CONDUIT
14. INSTALL POLYETHYLENE CONDUIT
15. DIRECTIONAL DRILL CONDUIT
16. INSTALL BRIDGE MOUNTED FIBERGLASS CONDUIT, WITH FOUR-WAY INNERDUCT INSERT
17. INSTALL CABLE(S) IN EXISTING CONDUIT
18. INSTALL CABLE(S) IN NEW CONDUIT
19. INSTALL CABLE(S) IN EXISTING RISER
20. INSTALL CABLE(S) IN NEW RISER
21. INSTALL CABLE(S) IN EXISTING CONDUIT STUBOUTS
22. INSTALL NEW CONDUIT INTO EXISTING CABINET BASE (USE EXISTING CONDUIT STUB-OUTS WHEN AVAILABLE)
23. INSTALL NEW RISER INTO EXISTING CABINET BASE (USE EXISTING CONDUIT STUB-OUTS WHEN AVAILABLE)
24. INSTALL NEW CONDUIT INTO EXISTING POLE MOUNTED CABINET
25. INSTALL NEW RISER INTO EXISTING POLE MOUNTED CABINET
26. TERMINATE COMMUNICATIONS CABLE ON EXISTING TELEMETRY INTERFACE PANEL IN TRAFFIC SIGNAL CONTROLLER CABINET
27. INSTALL NEW TELEMETRY INTERFACE PANEL IN TRAFFIC SIGNAL CONTROLLER CABINET
28. INSTALL INTERCONNECT CENTER, PATCH PANEL, JUMPERS, AND FUSION SPLICE CABLE IN CABINET
29. INSTALL UNDERGROUND SPLICE ENCLOSURE
30. INSTALL AERIAL SPLICE ENCLOSURE
31. INSTALL POLE MOUNTED SPLICE CABINET
32. INSTALL BASE MOUNTED SPLICE CABINET (336) WITH EXTEND BASE
33. REMOVE EXISTING SPLICE CABINET
34. INSTALL CABINET FOUNDATION
35. REMOVE EXISTING CABINET FOUNDATION
36. INSTALL CCTV CAMERA ASSEMBLY
37. INSTALL CCTV CAMERA WOOD POLE
38. INSTALL CCTV CAMERA METAL POLE AND FOUNDATION
39. INSTALL SPECIAL OVERSIZED JUNCTION BOX WITH 100 FEET OF COMMUNICATIONS CABLE
40. INSTALL OVERSIZED JUNCTION BOX
41. INSTALL BRIDGE MOUNTED JUNCTION BOX
42. INSTALL WOOD POLE
43. REMOVE EXISTING WOOD POLE
44. INSTALL AERIAL GUY ASSEMBLY
45. INSTALL STANDARD GUY ASSEMBLY
46. INSTALL SIDEWALK GUY ASSEMBLY
47. INSTALL MESSENGER CABLE
48. REMOVE EXISTING COMMUNICATIONS CABLE AND MESSENGER CABLE
49. REMOVE EXISTING COMMUNICATIONS CABLE
50. INSTALL REEL END SPLICE
51. INSTALL CABLE STORAGE RACKS (SNOW SHOES) AND STORE 100 FEET OF CABLE
52. INSTALL DELINEATOR MARKER
53. STORE 50 FEET OF COMMUNICATIONS CABLE
54. LASH CABLE(S) TO EXISTING SIGNAL / COMMUNICATIONS CABLE
55. LASH CABLE(S) TO EXISTING MESSENGER CABLE
56. LASH CABLE(S) TO NEW MESSENGER CABLE
57. MODIFY EXISTING ELECTRICAL SERVICE
58. INSTALL NEW ELECTRICAL SERVICE FOR DMS
59. INSTALL NEW BASE MOUNTED CABINET (336)
60. SEAL ALL CONDUIT ENTERING JUNCTION BOXES AND CABINETS WITH MOLDABLE DUCT SEAL
61. INSTALL ETHERNET SWITCH
62. LOCATE EXISTING JUNCTION BOX AND CONNECT WITH NEW CONDUIT
63. BOND MESSENGER CABLE AND RISER TO POLE GROUND

Prepared for the Offices of:
Transportation Mobility and Safety Division
NORTH CAROLINA DEPARTMENT OF TRANSPORTATION
750 N. Greenfield Pkwy., Garner, NC 27529

SCALE: NTS

CABLE ROUTING PLANS

DIV 3 NEW HANOVER CO. Near WILMINGTON

PLAN DATE:	January 2018	REVIEWED BY:	G. Green
PREPARED BY:	L. Neal	REVIEWED BY:	P. Marak

REVISIONS	INIT.	DATE

SEAL: PRELIMINARY PLANS DO NOT USE FOR CONSTRUCTION

SIGNATURE | DATE

CADD FILE NAME

PROJECT REFERENCE NO.	SHEET NO.
R-2633D	ITS-32

Revised 3/2/2018

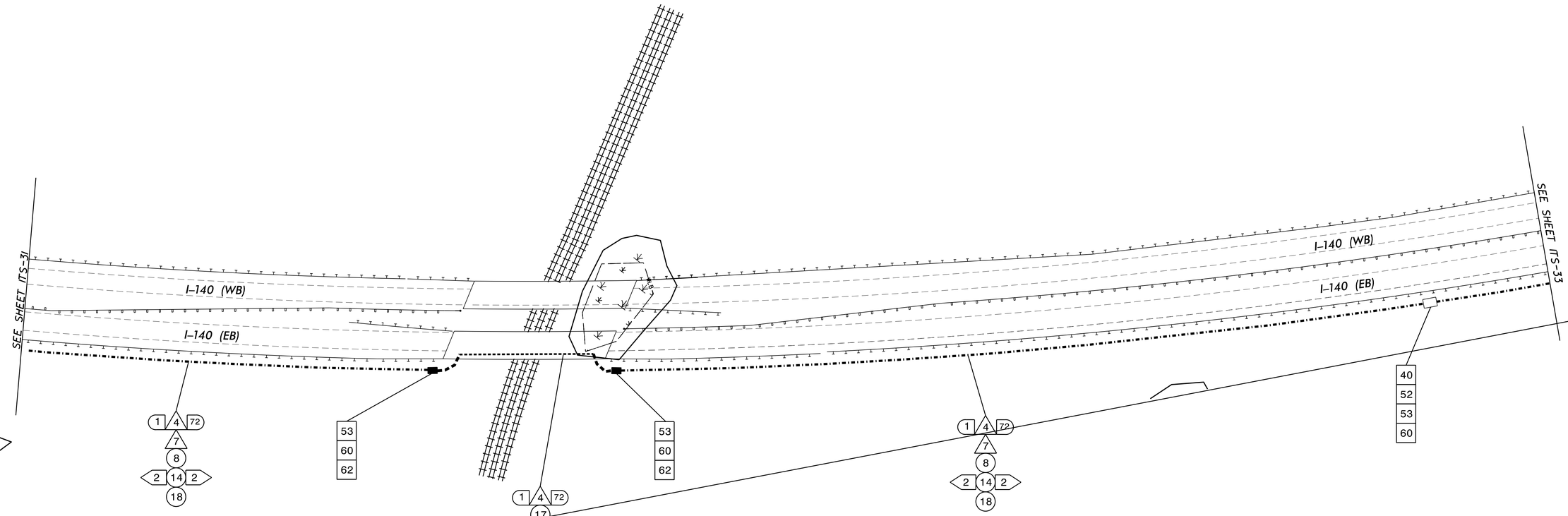

GENERAL NOTE:

CONTRACTOR TO MAINTAIN A MINIMUM OF SIX (6) FEET FROM EDGE OF PAVEMENT WHEN TRENCHING PARALLEL TO THE ROADWAY.

1. INSTALL REA, PE – 22, SHIELDED, TWISTED PAIR COMMUNICATIONS CABLE
2. INSTALL REA, PE – 38, (FIGURE – 8) SHIELDED, TWISTED PAIR COMMUNICATIONS CABLE
3. INSTALL 3-CONDUCTOR, CLASS B, STRANDED UNDERGROUND POWER CABLE
4. INSTALL SMFO CABLE
5. INSTALL CAT 5e COMMUNICATIONS CABLE
6. INSTALL FIBER OPTIC DROP CABLE
7. INSTALL TRACER WIRE
8. TRENCH
9. INSTALL PVC CONDUIT
10. INSTALL RIGID, GALVANIZED STEEL CONDUIT
11. INSTALL RIGID, GALVANIZED STEEL RISER WITH WEATHERHEAD
12. INSTALL RIGID, GALVANIZED STEEL RISER WITH FIBER OPTIC CABLE SEAL
13. INSTALL OUTER-DUCT POLYETHYLENE CONDUIT
14. INSTALL POLYETHYLENE CONDUIT
15. DIRECTIONAL DRILL CONDUIT
16. INSTALL BRIDGE MOUNTED FIBERGLASS CONDUIT, WITH FOUR-WAY INNERDUCT INSERT
17. INSTALL CABLE(S) IN EXISTING CONDUIT
18. INSTALL CABLE(S) IN NEW CONDUIT
19. INSTALL CABLE(S) IN EXISTING RISER
20. INSTALL CABLE(S) IN NEW RISER
21. INSTALL CABLE(S) IN EXISTING CONDUIT STUBOUTS
22. INSTALL NEW CONDUIT INTO EXISTING CABINET BASE (USE EXISTING CONDUIT STUB-OUTS WHEN AVAILABLE)
23. INSTALL NEW RISER INTO EXISTING CABINET BASE (USE EXISTING CONDUIT STUB-OUTS WHEN AVAILABLE)
24. INSTALL NEW CONDUIT INTO EXISTING POLE MOUNTED CABINET
25. INSTALL NEW RISER INTO EXISTING POLE MOUNTED CABINET
26. TERMINATE COMMUNICATIONS CABLE ON EXISTING TELEMETRY INTERFACE PANEL IN TRAFFIC SIGNAL CONTROLLER CABINET
27. INSTALL NEW TELEMETRY INTERFACE PANEL IN TRAFFIC SIGNAL CONTROLLER CABINET
28. INSTALL INTERCONNECT CENTER, PATCH PANEL, JUMPERS, AND FUSION SPLICE CABLE IN CABINET
29. INSTALL UNDERGROUND SPLICE ENCLOSURE
30. INSTALL AERIAL SPLICE ENCLOSURE
31. INSTALL POLE MOUNTED SPLICE CABINET
32. INSTALL BASE MOUNTED SPLICE CABINET (336) WITH EXTEND BASE
33. REMOVE EXISTING SPLICE CABINET
34. INSTALL CABINET FOUNDATION
35. REMOVE EXISTING CABINET FOUNDATION
36. INSTALL CCTV CAMERA ASSEMBLY
37. INSTALL CCTV CAMERA WOOD POLE
38. INSTALL CCTV CAMERA METAL POLE AND FOUNDATION
39. INSTALL SPECIAL OVERSIZED JUNCTION BOX WITH 100 FEET OF COMMUNICATIONS CABLE
40. INSTALL OVERSIZED JUNCTION BOX
41. INSTALL BRIDGE MOUNTED JUNCTION BOX
42. INSTALL WOOD POLE
43. REMOVE EXISTING WOOD POLE
44. INSTALL AERIAL GUY ASSEMBLY
45. INSTALL STANDARD GUY ASSEMBLY
46. INSTALL SIDEWALK GUY ASSEMBLY
47. INSTALL MESSENGER CABLE
48. REMOVE EXISTING COMMUNICATIONS CABLE AND MESSENGER CABLE
49. REMOVE EXISTING COMMUNICATIONS CABLE
50. INSTALL REEL END SPLICE
51. INSTALL CABLE STORAGE RACKS (SNOW SHOES) AND STORE 100 FEET OF CABLE
52. INSTALL DELINEATOR MARKER
53. STORE 50 FEET OF COMMUNICATIONS CABLE
54. LASH CABLE(S) TO EXISTING SIGNAL / COMMUNICATIONS CABLE
55. LASH CABLE(S) TO EXISTING MESSENGER CABLE
56. LASH CABLE(S) TO NEW MESSENGER CABLE
57. MODIFY EXISTING ELECTRICAL SERVICE
58. INSTALL NEW ELECTRICAL SERVICE FOR DMS
59. INSTALL NEW BASE MOUNTED CABINET (336)
60. SEAL ALL CONDUIT ENTERING JUNCTION BOXES AND CABINETS WITH MOLDABLE DUCT SEAL
61. INSTALL ETHERNET SWITCH
62. LOCATE EXISTING JUNCTION BOX AND CONNECT WITH NEW CONDUIT
63. BOND MESSENGER CABLE AND RISER TO POLE GROUND

Prepared for the Offices of:
Transportation Mobility and Safety Division
STATE OF NORTH CAROLINA DEPARTMENT OF TRANSPORTATION
Intelligent Transportation Systems
750 N. Greenfield Pkwy., Garner, NC 27529

SCALE: NTS

CABLE ROUTING PLANS

DIV 3 NEW HANOVER CO. Near WILMINGTON

PLAN DATE:	January 2018	REVIEWED BY:	G. Green
PREPARED BY:	L. Neal	REVIEWED BY:	P. Marak

REVISIONS	INIT.	DATE

SEAL

PRELIMINARY PLANS
DO NOT USE FOR CONSTRUCTION

SIGNATURE DATE

CADD FILE NAME

PROJECT REFERENCE NO.	SHEET NO.
R-2633D	ITS-33

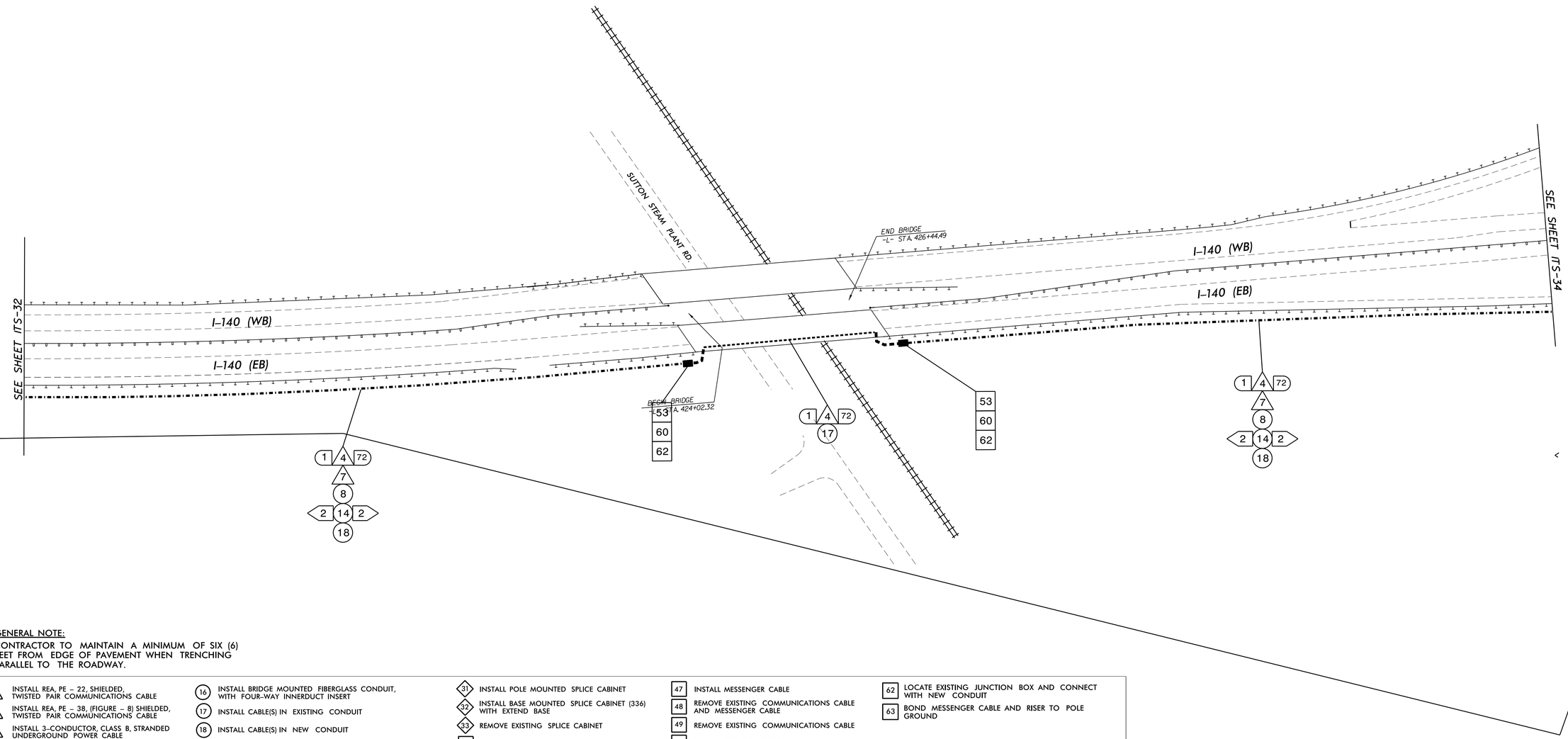

GENERAL NOTE:
CONTRACTOR TO MAINTAIN A MINIMUM OF SIX (6) FEET FROM EDGE OF PAVEMENT WHEN TRENCHING PARALLEL TO THE ROADWAY.

1. INSTALL REA, PE – 22, SHIELDED, TWISTED PAIR COMMUNICATIONS CABLE
2. INSTALL REA, PE – 38, (FIGURE – 8) SHIELDED, TWISTED PAIR COMMUNICATIONS CABLE
3. INSTALL 3-CONDUCTOR, CLASS B, STRANDED UNDERGROUND POWER CABLE
4. INSTALL SMFO CABLE
5. INSTALL CAT 5e COMMUNICATIONS CABLE
6. INSTALL FIBER OPTIC DROP CABLE
7. INSTALL TRACER WIRE
8. TRENCH
9. INSTALL PVC CONDUIT
10. INSTALL RIGID, GALVANIZED STEEL CONDUIT
11. INSTALL RIGID, GALVANIZED STEEL RISER WITH WEATHERHEAD
12. INSTALL RIGID, GALVANIZED STEEL RISER WITH FIBER OPTIC CABLE SEAL
13. INSTALL OUTER-DUCT POLYETHYLENE CONDUIT
14. INSTALL POLYETHYLENE CONDUIT
15. DIRECTIONAL DRILL CONDUIT
16. INSTALL BRIDGE MOUNTED FIBERGLASS CONDUIT, WITH FOUR-WAY INNERDUCT INSERT
17. INSTALL CABLE(S) IN EXISTING CONDUIT
18. INSTALL CABLE(S) IN NEW CONDUIT
19. INSTALL CABLE(S) IN EXISTING RISER
20. INSTALL CABLE(S) IN NEW RISER
21. INSTALL CABLE(S) IN EXISTING CONDUIT STUBOUTS
22. INSTALL NEW CONDUIT INTO EXISTING CABINET BASE (USE EXISTING CONDUIT STUB-OUTS WHEN AVAILABLE)
23. INSTALL NEW RISER INTO EXISTING CABINET BASE (USE EXISTING CONDUIT STUB-OUTS WHEN AVAILABLE)
24. INSTALL NEW CONDUIT INTO EXISTING POLE MOUNTED CABINET
25. INSTALL NEW RISER INTO EXISTING POLE MOUNTED CABINET
26. TERMINATE COMMUNICATIONS CABLE ON EXISTING TELEMETRY INTERFACE PANEL IN TRAFFIC SIGNAL CONTROLLER CABINET
27. INSTALL NEW TELEMETRY INTERFACE PANEL IN TRAFFIC SIGNAL CONTROLLER CABINET
28. INSTALL INTERCONNECT CENTER, PATCH PANEL, JUMPERS, AND FUSION SPLICE CABLE IN CABINET
29. INSTALL UNDERGROUND SPLICE ENCLOSURE
30. INSTALL AERIAL SPLICE ENCLOSURE
31. INSTALL POLE MOUNTED SPLICE CABINET
32. INSTALL BASE MOUNTED SPLICE CABINET (336) WITH EXTEND BASE
33. REMOVE EXISTING SPLICE CABINET
34. INSTALL CABINET FOUNDATION
35. REMOVE EXISTING CABINET FOUNDATION
36. INSTALL CCTV CAMERA ASSEMBLY
37. INSTALL CCTV CAMERA WOOD POLE
38. INSTALL CCTV CAMERA METAL POLE AND FOUNDATION
39. INSTALL SPECIAL OVERSIZED JUNCTION BOX WITH 100 FEET OF COMMUNICATIONS CABLE
40. INSTALL OVERSIZED JUNCTION BOX
41. INSTALL BRIDGE MOUNTED JUNCTION BOX
42. INSTALL WOOD POLE
43. REMOVE EXISTING WOOD POLE
44. INSTALL AERIAL GUY ASSEMBLY
45. INSTALL STANDARD GUY ASSEMBLY
46. INSTALL SIDEWALK GUY ASSEMBLY
47. INSTALL MESSENGER CABLE
48. REMOVE EXISTING COMMUNICATIONS CABLE AND MESSENGER CABLE
49. REMOVE EXISTING COMMUNICATIONS CABLE
50. INSTALL REEL END SPLICE
51. INSTALL CABLE STORAGE RACKS (SNOW SHOES) AND STORE 100 FEET OF CABLE
52. INSTALL DELINEATOR MARKER
53. STORE 50 FEET OF COMMUNICATIONS CABLE
54. LASH CABLE(S) TO EXISTING SIGNAL / COMMUNICATIONS CABLE
55. LASH CABLE(S) TO EXISTING MESSENGER CABLE
56. LASH CABLE(S) TO NEW MESSENGER CABLE
57. MODIFY EXISTING ELECTRICAL SERVICE
58. INSTALL NEW ELECTRICAL SERVICE FOR DMS
59. INSTALL NEW BASE MOUNTED CABINET (336)
60. SEAL ALL CONDUIT ENTERING JUNCTION BOXES AND CABINETS WITH MOLDABLE DUCT SEAL
61. INSTALL ETHERNET SWITCH
62. LOCATE EXISTING JUNCTION BOX AND CONNECT WITH NEW CONDUIT
63. BOND MESSENGER CABLE AND RISER TO POLE GROUND

Prepared for the Offices of:
Transportation Mobility and Safety Division
STATE OF NORTH CAROLINA DEPARTMENT OF TRANSPORTATION
Intermodal Transportation Systems Section
750 N. Greenfield Pkwy., Garner, NC 27529

CABLE ROUTING PLANS

DIV 3 NEW HANOVER CO. Near WILMINGTON

PLAN DATE:	January 2018	REVIEWED BY:	G. Green
PREPARED BY:	L. Neal	REVIEWED BY:	P. Marak

SCALE: NTS

REVISIONS	INIT.	DATE

SEAL
PRELIMINARY PLANS
DO NOT USE FOR CONSTRUCTION
SIGNATURE DATE
CADD FILE NAME

Revised 3/2/2018

Revised 3/2/2018

PROJECT REFERENCE NO.	SHEET NO.
R-2633D	ITS-34

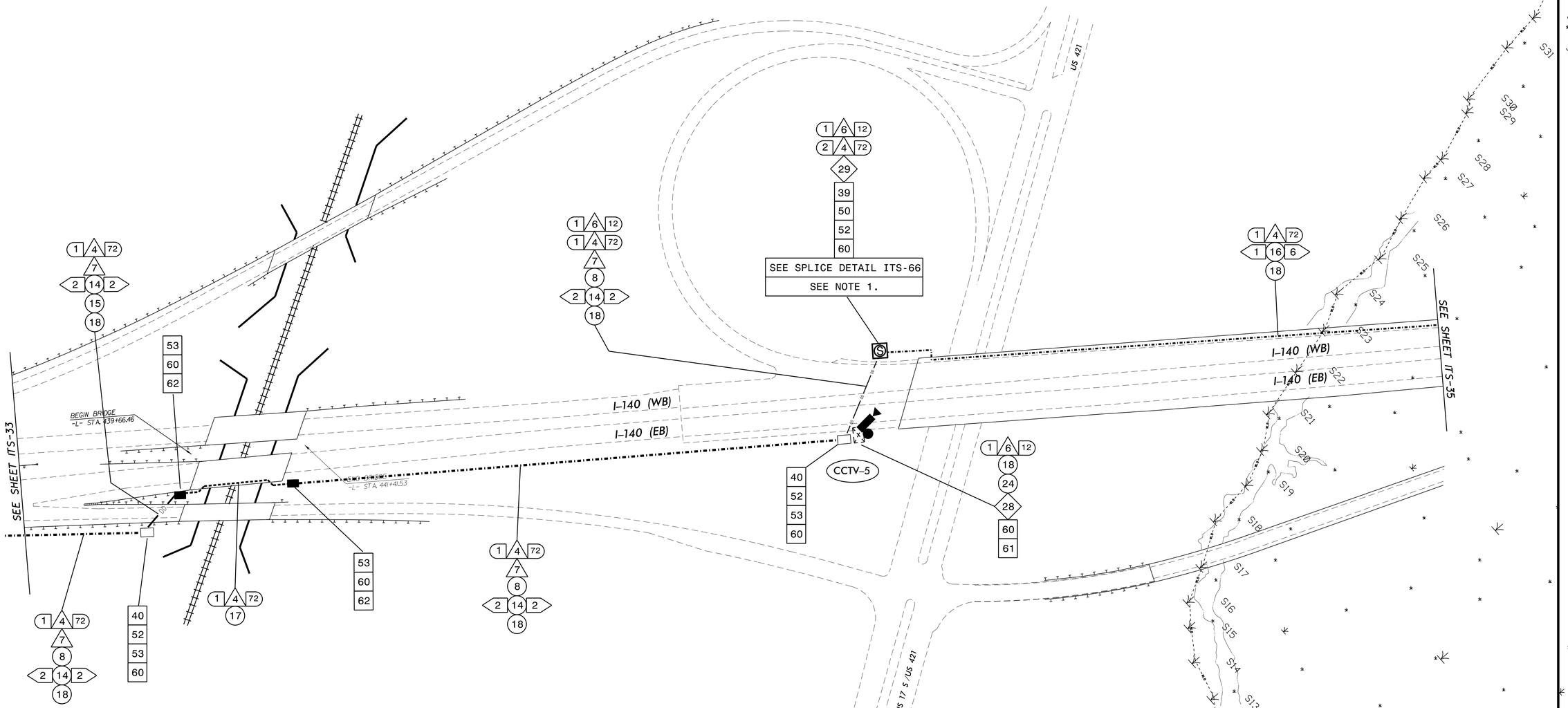

GENERAL NOTE:

CONTRACTOR TO MAINTAIN A MINIMUM OF SIX (6) FEET FROM EDGE OF PAVEMENT WHEN TRENCHING PARALLEL TO THE ROADWAY.

NOTE No.1 CONTRACTOR SHALL ROUTE CONDUIT AROUND END WALL TO A NEW SPECIAL OVERSIZE JUNCTION BOX IN EARTH. DO NOT DRILL THROUGH BRIDGE WALL.

1. INSTALL REA, PE – 22, SHIELDED, TWISTED PAIR COMMUNICATIONS CABLE
2. INSTALL REA, PE – 38, (FIGURE – 8) SHIELDED, TWISTED PAIR COMMUNICATIONS CABLE
3. INSTALL 3–CONDUCTOR, CLASS B, STRANDED UNDERGROUND POWER CABLE
4. INSTALL SMFO CABLE
5. INSTALL CAT 5e COMMUNICATIONS CABLE
6. INSTALL FIBER OPTIC DROP CABLE
7. INSTALL TRACER WIRE
8. TRENCH
9. INSTALL PVC CONDUIT
10. INSTALL RIGID, GALVANIZED STEEL CONDUIT
11. INSTALL RIGID, GALVANIZED STEEL RISER WITH WEATHERHEAD
12. INSTALL RIGID, GALVANIZED STEEL RISER WITH FIBER OPTIC CABLE SEAL
13. INSTALL OUTER–DUCT POLYETHYLENE CONDUIT
14. INSTALL POLYETHYLENE CONDUIT
15. DIRECTIONAL DRILL CONDUIT
16. INSTALL BRIDGE MOUNTED FIBERGLASS CONDUIT, WITH FOUR–WAY INNERDUCT INSERT
17. INSTALL CABLE(S) IN EXISTING CONDUIT
18. INSTALL CABLE(S) IN NEW CONDUIT
19. INSTALL CABLE(S) IN EXISTING RISER
20. INSTALL CABLE(S) IN NEW RISER
21. INSTALL CABLE(S) IN EXISTING CONDUIT STUBOUTS
22. INSTALL NEW CONDUIT INTO EXISTING CABINET BASE (USE EXISTING CONDUIT STUB–OUTS WHEN AVAILABLE)
23. INSTALL NEW RISER INTO EXISTING CABINET BASE (USE EXISTING CONDUIT STUB–OUTS WHEN AVAILABLE)
24. INSTALL NEW CONDUIT INTO EXISTING POLE MOUNTED CABINET
25. INSTALL NEW RISER INTO EXISTING POLE MOUNTED CABINET
26. TERMINATE COMMUNICATIONS CABLE ON EXISTING TELEMETRY INTERFACE PANEL IN TRAFFIC SIGNAL CONTROLLER CABINET
27. INSTALL NEW TELEMETRY INTERFACE PANEL IN TRAFFIC SIGNAL CONTROLLER CABINET
28. INSTALL INTERCONNECT CENTER, PATCH PANEL, JUMPERS, AND FUSION SPLICE CABLE IN CABINET
29. INSTALL UNDERGROUND SPLICE ENCLOSURE
30. INSTALL AERIAL SPLICE ENCLOSURE
31. INSTALL POLE MOUNTED SPLICE CABINET
32. INSTALL BASE MOUNTED SPLICE CABINET (336) WITH EXTEND BASE
33. REMOVE EXISTING SPLICE CABINET
34. INSTALL CABINET FOUNDATION
35. REMOVE EXISTING CABINET FOUNDATION
36. INSTALL CCTV CAMERA ASSEMBLY
37. INSTALL CCTV CAMERA WOOD POLE
38. INSTALL CCTV CAMERA METAL POLE AND FOUNDATION
39. INSTALL SPECIAL OVERSIZED JUNCTION BOX WITH 100 FEET OF COMMUNICATIONS CABLE
40. INSTALL OVERSIZED JUNCTION BOX
41. INSTALL BRIDGE MOUNTED JUNCTION BOX
42. INSTALL WOOD POLE
43. REMOVE EXISTING WOOD POLE
44. INSTALL AERIAL GUY ASSEMBLY
45. INSTALL STANDARD GUY ASSEMBLY
46. INSTALL SIDEWALK GUY ASSEMBLY
47. INSTALL MESSENGER CABLE
48. REMOVE EXISTING COMMUNICATIONS CABLE AND MESSENGER CABLE
49. REMOVE EXISTING COMMUNICATIONS CABLE
50. INSTALL REEL END SPLICE
51. INSTALL CABLE STORAGE RACKS (SNOW SHOES) AND STORE 100 FEET OF CABLE
52. INSTALL DELINEATOR MARKER
53. STORE 50 FEET OF COMMUNICATIONS CABLE
54. LASH CABLE(S) TO EXISTING SIGNAL / COMMUNICATIONS CABLE
55. LASH CABLE(S) TO EXISTING MESSENGER CABLE
56. LASH CABLE(S) TO NEW MESSENGER CABLE
57. MODIFY EXISTING ELECTRICAL SERVICE
58. INSTALL NEW ELECTRICAL SERVICE FOR DMS
59. INSTALL NEW BASE MOUNTED CABINET (336)
60. SEAL ALL CONDUIT ENTERING JUNCTION BOXES AND CABINETS WITH MOLDABLE DUCT SEAL
61. INSTALL ETHERNET SWITCH
62. LOCATE EXISTING JUNCTION BOX AND CONNECT WITH NEW CONDUIT
63. BOND MESSENGER CABLE AND RISER TO POLE GROUND

Prepared for the Offices of:

Transportation Mobility and Safety Division
STATE OF NORTH CAROLINA DEPARTMENT OF TRANSPORTATION
Intermodal Transportation Planning Section

750 N. Greenfield Pkwy., Garner, NC 27529

CABLE ROUTING PLANS

DIV 3 NEW HANOVER CO. Near WILMINGTON

PLAN DATE: January 2018		REVIEWED BY:	G. Green
PREPARED BY:	T. Neal	REVIEWED BY:	P. Marak

SCALE: NTS

REVISIONS	INIT.	DATE

SEAL

PRELIMINARY PLANS
DO NOT USE FOR CONSTRUCTION

SIGNATURE DATE

CADD FILE NAME

PROJECT REFERENCE NO.	SHEET NO.
R-2633D	ITS-35

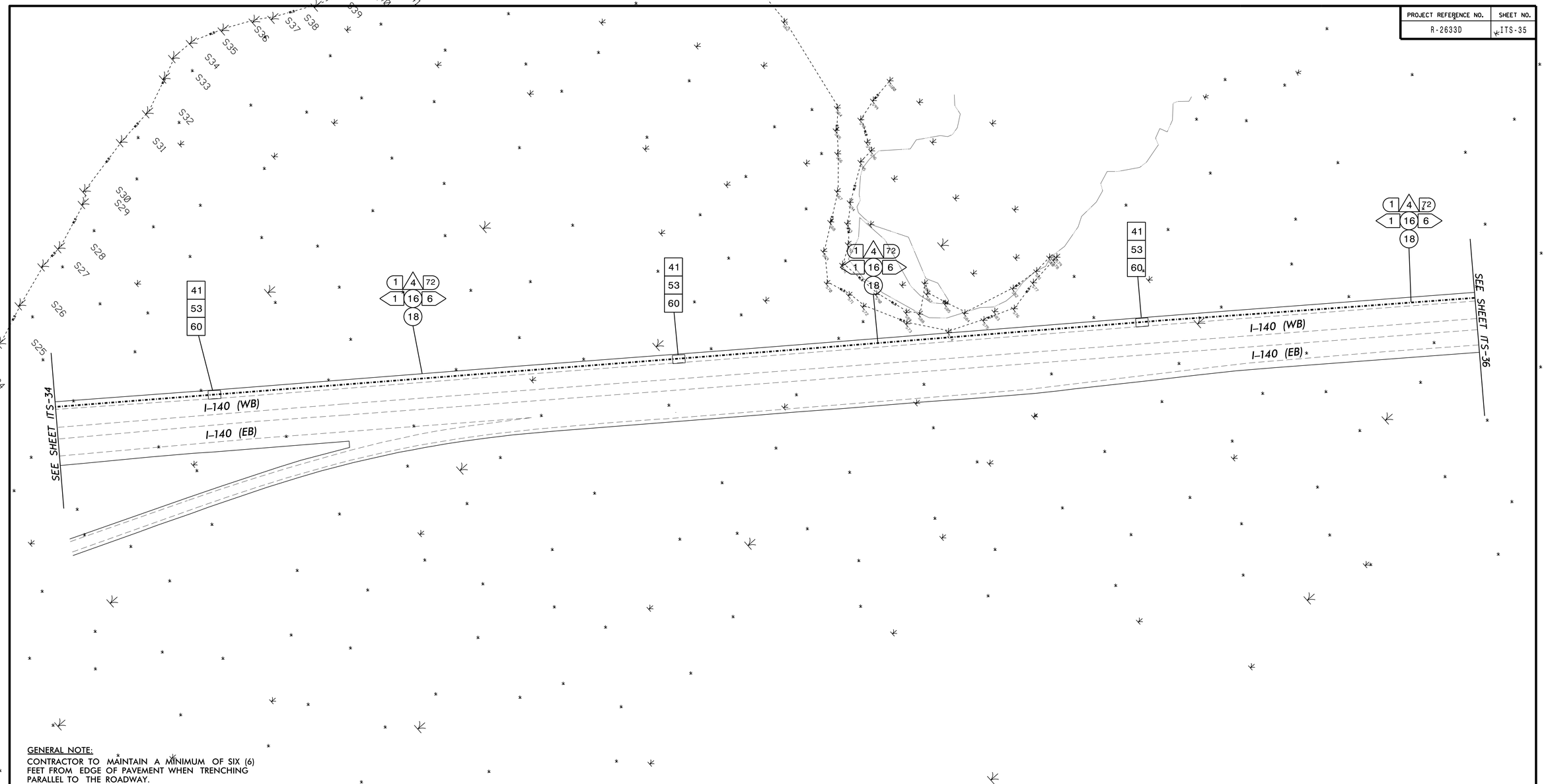

GENERAL NOTE:

CONTRACTOR TO MAINTAIN A MINIMUM OF SIX (6) FEET FROM EDGE OF PAVEMENT WHEN TRENCHING PARALLEL TO THE ROADWAY.

1. INSTALL REA, PE – 22, SHIELDED, TWISTED PAIR COMMUNICATIONS CABLE
2. INSTALL REA, PE – 38, (FIGURE – 8) SHIELDED, TWISTED PAIR COMMUNICATIONS CABLE
3. INSTALL 3-CONDUCTOR, CLASS B, STRANDED UNDERGROUND POWER CABLE
4. INSTALL SMFO CABLE
5. INSTALL CAT 5e COMMUNICATIONS CABLE
6. INSTALL FIBER OPTIC DROP CABLE
7. INSTALL TRACER WIRE
8. TRENCH
9. INSTALL PVC CONDUIT
10. INSTALL RIGID, GALVANIZED STEEL CONDUIT
11. INSTALL RIGID, GALVANIZED STEEL RISER WITH WEATHERHEAD
12. INSTALL RIGID, GALVANIZED STEEL RISER WITH FIBER OPTIC CABLE SEAL
13. INSTALL OUTER-DUCT POLYETHYLENE CONDUIT
14. INSTALL POLYETHYLENE CONDUIT
15. DIRECTIONAL DRILL CONDUIT
16. INSTALL BRIDGE MOUNTED FIBERGLASS CONDUIT, WITH FOUR-WAY INNERDUCT INSERT
17. INSTALL CABLE(S) IN EXISTING CONDUIT
18. INSTALL CABLE(S) IN NEW CONDUIT
19. INSTALL CABLE(S) IN EXISTING RISER
20. INSTALL CABLE(S) IN NEW RISER
21. INSTALL CABLE(S) IN EXISTING CONDUIT STUBOUTS
22. INSTALL NEW CONDUIT INTO EXISTING CABINET BASE (USE EXISTING CONDUIT STUB-OUTS WHEN AVAILABLE)
23. INSTALL NEW RISER INTO EXISTING CABINET BASE (USE EXISTING CONDUIT STUB-OUTS WHEN AVAILABLE)
24. INSTALL NEW CONDUIT INTO EXISTING POLE MOUNTED CABINET
25. INSTALL NEW RISER INTO EXISTING POLE MOUNTED CABINET
26. TERMINATE COMMUNICATIONS CABLE ON EXISTING TELEMETRY INTERFACE PANEL IN TRAFFIC SIGNAL CONTROLLER CABINET
27. INSTALL NEW TELEMETRY INTERFACE PANEL IN TRAFFIC SIGNAL CONTROLLER CABINET
28. INSTALL INTERCONNECT CENTER, PATCH PANEL, JUMPERS, AND FUSION SPLICE CABLE IN CABINET
29. INSTALL UNDERGROUND SPLICE ENCLOSURE
30. INSTALL AERIAL SPLICE ENCLOSURE
31. INSTALL POLE MOUNTED SPLICE CABINET
32. INSTALL BASE MOUNTED SPLICE CABINET (336) WITH EXTEND BASE
33. REMOVE EXISTING SPLICE CABINET
34. INSTALL CABINET FOUNDATION
35. REMOVE EXISTING CABINET FOUNDATION
36. INSTALL CCTV CAMERA ASSEMBLY
37. INSTALL CCTV CAMERA WOOD POLE
38. INSTALL CCTV CAMERA METAL POLE AND FOUNDATION
39. INSTALL SPECIAL OVERSIZED JUNCTION BOX WITH 100 FEET OF COMMUNICATIONS CABLE
40. INSTALL OVERSIZED JUNCTION BOX
41. INSTALL BRIDGE MOUNTED JUNCTION BOX
42. INSTALL WOOD POLE
43. REMOVE EXISTING WOOD POLE
44. INSTALL AERIAL GUY ASSEMBLY
45. INSTALL STANDARD GUY ASSEMBLY
46. INSTALL SIDEWALK GUY ASSEMBLY
47. INSTALL MESSENGER CABLE
48. REMOVE EXISTING COMMUNICATIONS CABLE AND MESSENGER CABLE
49. REMOVE EXISTING COMMUNICATIONS CABLE
50. INSTALL REEL END SPLICE
51. INSTALL CABLE STORAGE RACKS (SNOW SHOES) AND STORE 100 FEET OF CABLE
52. INSTALL DELINEATOR MARKER
53. STORE 50 FEET OF COMMUNICATIONS CABLE
54. LASH CABLE(S) TO EXISTING SIGNAL / COMMUNICATIONS CABLE
55. LASH CABLE(S) TO EXISTING MESSENGER CABLE
56. LASH CABLE(S) TO NEW MESSENGER CABLE
57. MODIFY EXISTING ELECTRICAL SERVICE
58. INSTALL NEW ELECTRICAL SERVICE FOR DMS
59. INSTALL NEW BASE MOUNTED CABINET (336)
60. SEAL ALL CONDUIT ENTERING JUNCTION BOXES AND CABINETS WITH MOLDABLE DUCT SEAL
61. INSTALL ETHERNET SWITCH
62. LOCATE EXISTING JUNCTION BOX AND CONNECT WITH NEW CONDUIT
63. BOND MESSENGER CABLE AND RISER TO POLE GROUND

Prepared for the Offices of:

Transportation Mobility and Safety Division
STATE OF NORTH CAROLINA DEPARTMENT OF TRANSPORTATION
Intermodal Transportation Systems Section

750 N. Greenfield Pkwy., Garner, NC 27529

CABLE ROUTING PLANS

DIV 3 NEW HANOVER CO. Near WILMINGTON

PLAN DATE:	January 2018	REVIEWED BY:	G. Green
PREPARED BY:	L. Neal	REVIEWED BY:	P. Marak

SCALE: NTS

REVISIONS	INIT.	DATE

SEAL

PRELIMINARY PLANS
DO NOT USE FOR CONSTRUCTION

SIGNATURE DATE

CADD FILE NAME

Revised 3/2/2018

Revised 3/2/2018

PROJECT REFERENCE NO.	SHEET NO.
R-2633D	ITS-36

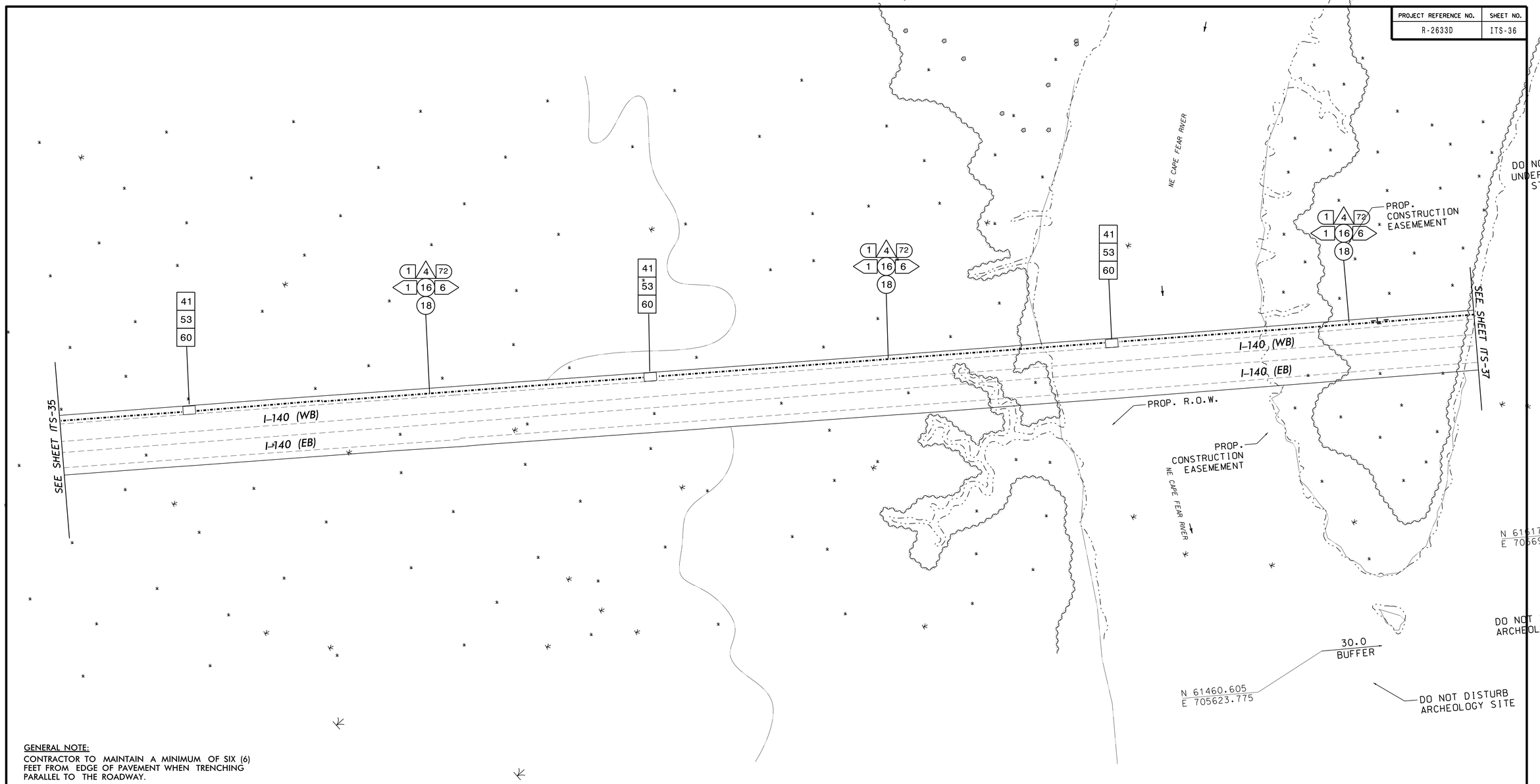

GENERAL NOTE:

CONTRACTOR TO MAINTAIN A MINIMUM OF SIX (6) FEET FROM EDGE OF PAVEMENT WHEN TRENCHING PARALLEL TO THE ROADWAY.

1. INSTALL REA, PE – 22, SHIELDED, TWISTED PAIR COMMUNICATIONS CABLE
2. INSTALL REA, PE – 38, (FIGURE – 8) SHIELDED, TWISTED PAIR COMMUNICATIONS CABLE
3. INSTALL 3–CONDUCTOR, CLASS B, STRANDED UNDERGROUND POWER CABLE
4. INSTALL SMFO CABLE
5. INSTALL CAT 5e COMMUNICATIONS CABLE
6. INSTALL FIBER OPTIC DROP CABLE
7. INSTALL TRACER WIRE
8. TRENCH
9. INSTALL PVC CONDUIT
10. INSTALL RIGID, GALVANIZED STEEL CONDUIT
11. INSTALL RIGID, GALVANIZED STEEL RISER WITH WEATHERHEAD
12. INSTALL RIGID, GALVANIZED STEEL RISER WITH FIBER OPTIC CABLE SEAL
13. INSTALL OUTER–DUCT POLYETHYLENE CONDUIT
14. INSTALL POLYETHYLENE CONDUIT
15. DIRECTIONAL DRILL CONDUIT
16. INSTALL BRIDGE MOUNTED FIBERGLASS CONDUIT, WITH FOUR–WAY INNERDUCT INSERT
17. INSTALL CABLE(S) IN EXISTING CONDUIT
18. INSTALL CABLE(S) IN NEW CONDUIT
19. INSTALL CABLE(S) IN EXISTING RISER
20. INSTALL CABLE(S) IN NEW RISER
21. INSTALL CABLE(S) IN EXISTING CONDUIT STUBOUTS
22. INSTALL NEW CONDUIT INTO EXISTING CABINET BASE (USE EXISTING CONDUIT STUB–OUTS WHEN AVAILABLE)
23. INSTALL NEW RISER INTO EXISTING CABINET BASE (USE EXISTING CONDUIT STUB–OUTS WHEN AVAILABLE)
24. INSTALL NEW CONDUIT INTO EXISTING POLE MOUNTED CABINET
25. INSTALL NEW RISER INTO EXISTING POLE MOUNTED CABINET
26. TERMINATE COMMUNICATIONS CABLE ON EXISTING TELEMETRY INTERFACE PANEL IN TRAFFIC SIGNAL CONTROLLER CABINET
27. INSTALL NEW TELEMETRY INTERFACE PANEL IN TRAFFIC SIGNAL CONTROLLER CABINET
28. INSTALL INTERCONNECT CENTER, PATCH PANEL, JUMPERS, AND FUSION SPLICE CABLE IN CABINET
29. INSTALL UNDERGROUND SPLICE ENCLOSURE
30. INSTALL AERIAL SPLICE ENCLOSURE
31. INSTALL POLE MOUNTED SPLICE CABINET
32. INSTALL BASE MOUNTED SPLICE CABINET (336) WITH EXTEND BASE
33. REMOVE EXISTING SPLICE CABINET
34. INSTALL CABINET FOUNDATION
35. REMOVE EXISTING CABINET FOUNDATION
36. INSTALL CCTV CAMERA ASSEMBLY
37. INSTALL CCTV CAMERA WOOD POLE
38. INSTALL CCTV CAMERA METAL POLE AND FOUNDATION
39. INSTALL SPECIAL OVERSIZED JUNCTION BOX WITH 100 FEET OF COMMUNICATIONS CABLE
40. INSTALL OVERSIZED JUNCTION BOX
41. INSTALL BRIDGE MOUNTED JUNCTION BOX
42. INSTALL WOOD POLE
43. REMOVE EXISTING WOOD POLE
44. INSTALL AERIAL GUY ASSEMBLY
45. INSTALL STANDARD GUY ASSEMBLY
46. INSTALL SIDEWALK GUY ASSEMBLY
47. INSTALL MESSENGER CABLE
48. REMOVE EXISTING COMMUNICATIONS CABLE AND MESSENGER CABLE
49. REMOVE EXISTING COMMUNICATIONS CABLE
50. INSTALL REEL END SPLICE
51. INSTALL CABLE STORAGE RACKS (SNOW SHOES) AND STORE 100 FEET OF CABLE
52. INSTALL DELINEATOR MARKER
53. STORE 50 FEET OF COMMUNICATIONS CABLE
54. LASH CABLE(S) TO EXISTING SIGNAL / COMMUNICATIONS CABLE
55. LASH CABLE(S) TO EXISTING MESSENGER CABLE
56. LASH CABLE(S) TO NEW MESSENGER CABLE
57. MODIFY EXISTING ELECTRICAL SERVICE
58. INSTALL NEW ELECTRICAL SERVICE FOR DMS
59. INSTALL NEW BASE MOUNTED CABINET (336)
60. SEAL ALL CONDUIT ENTERING JUNCTION BOXES AND CABINETS WITH MOLDABLE DUCT SEAL
61. INSTALL ETHERNET SWITCH
62. LOCATE EXISTING JUNCTION BOX AND CONNECT WITH NEW CONDUIT
63. BOND MESSENGER CABLE AND RISER TO POLE GROUND

Prepared for the Offices of:

STATE OF NORTH CAROLINA DEPARTMENT OF TRANSPORTATION
Transportation Mobility and Safety Division
Intelligent Transportation Systems

750 N. Greenfield Pkwy., Garner, NC 27529

SCALE: NTS

CABLE ROUTING PLANS

DIV 3 NEW HANOVER CO. Near WILMINGTON

PLAN DATE:	January 2018	REVIEWED BY:	G. Green
PREPARED BY:	L. Neal	REVIEWED BY:	P. Marak

REVISIONS	INIT.	DATE

SEAL

PRELIMINARY PLANS
DO NOT USE FOR CONSTRUCTION

SIGNATURE DATE

CADD FILE NAME

EOLOGICAL

SCALE 1:1000

PROJECT REFERENCE NO.	SHEET NO.
R-2633D	ITS-37

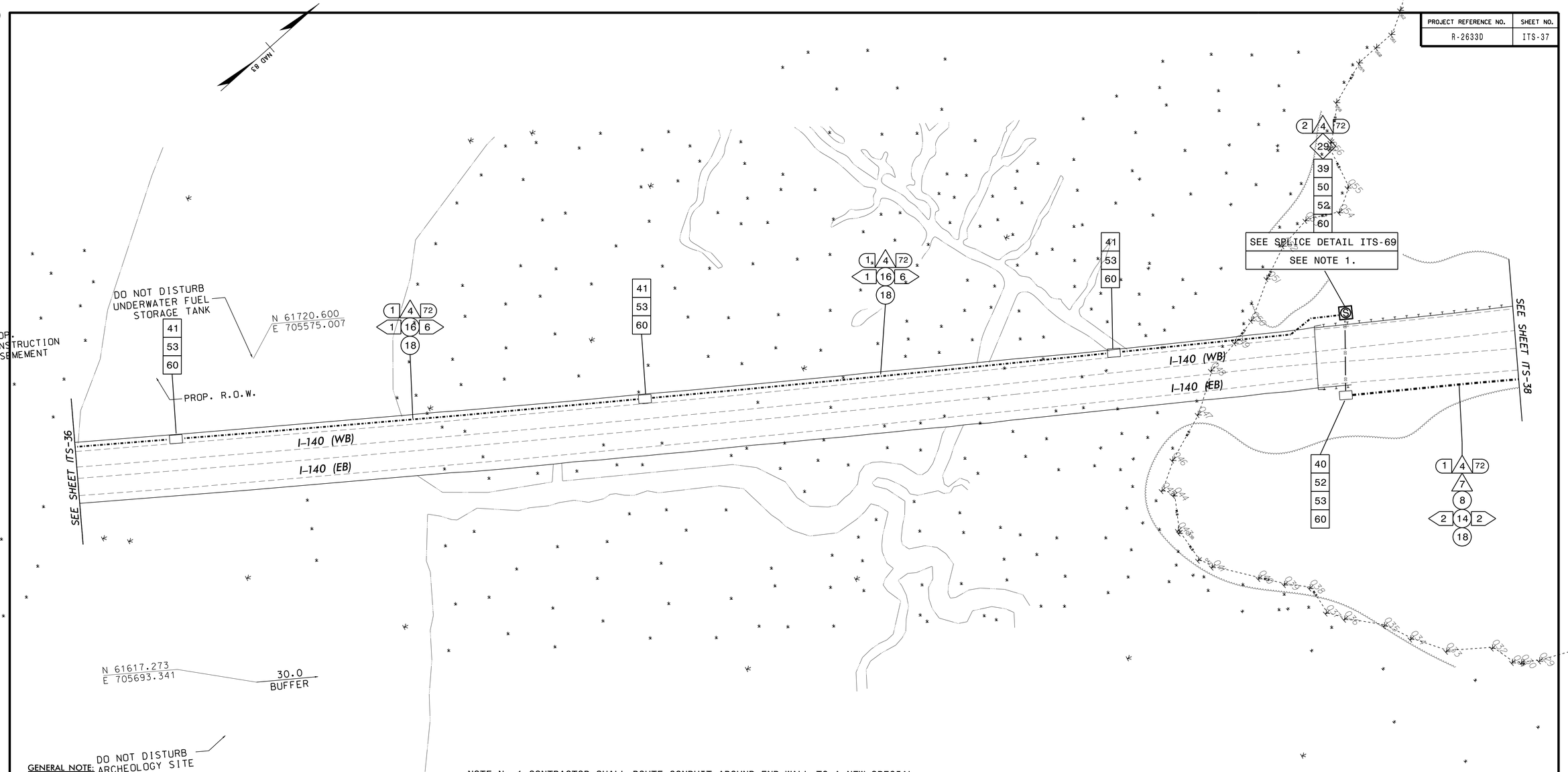

Revised 3/2/2018

GENERAL NOTE:
CONTRACTOR TO MAINTAIN A MINIMUM OF SIX (6) FEET FROM EDGE OF PAVEMENT WHEN TRENCHING PARALLEL TO THE ROADWAY.

NOTE No.1 CONTRACTOR SHALL ROUTE CONDUIT AROUND END WALL TO A NEW SPECIAL OVERSIZE JUNCTION BOX IN EARTH. DO NOT DRILL THROUGH BRIDGE WALL.

1. INSTALL REA, PE – 22, SHIELDED, TWISTED PAIR COMMUNICATIONS CABLE
2. INSTALL REA, PE – 22 (FIGURE – 8) SHIELDED, TWISTED PAIR COMMUNICATIONS CABLE
3. INSTALL 3-CONDUCTOR, CLASS B, STRANDED UNDERGROUND POWER CABLE
4. INSTALL SMFO CABLE
5. INSTALL CAT 5e COMMUNICATIONS CABLE
6. INSTALL FIBER OPTIC DROP CABLE
7. INSTALL TRACER WIRE
8. TRENCH
9. INSTALL PVC CONDUIT
10. INSTALL RIGID, GALVANIZED STEEL CONDUIT
11. INSTALL RIGID, GALVANIZED STEEL RISER WITH WEATHERHEAD
12. INSTALL RIGID, GALVANIZED STEEL RISER WITH FIBER OPTIC CABLE SEAL
13. INSTALL OUTER-DUCT POLYETHYLENE CONDUIT
14. INSTALL POLYETHYLENE CONDUIT
15. DIRECTIONAL DRILL CONDUIT
16. INSTALL BRIDGE MOUNTED FIBERGLASS CONDUIT, WITH FOUR-WAY INNERDUCT INSERT
17. INSTALL CABLE(S) IN EXISTING CONDUIT
18. INSTALL CABLE(S) IN NEW CONDUIT
19. INSTALL CABLE(S) IN EXISTING RISER
20. INSTALL CABLE(S) IN NEW RISER
21. INSTALL CABLE(S) IN EXISTING CONDUIT STUBOUTS
22. INSTALL NEW CONDUIT INTO EXISTING CABINET BASE (USE EXISTING CONDUIT STUB-OUTS WHEN AVAILABLE)
23. INSTALL NEW RISER INTO EXISTING CABINET BASE (USE EXISTING CONDUIT STUB-OUTS WHEN AVAILABLE)
24. INSTALL NEW CONDUIT INTO EXISTING POLE MOUNTED CABINET
25. INSTALL NEW RISER INTO EXISTING POLE MOUNTED CABINET
26. TERMINATE COMMUNICATIONS CABLE ON EXISTING TELEMETRY INTERFACE PANEL IN TRAFFIC SIGNAL CONTROLLER CABINET
27. INSTALL NEW TELEMETRY INTERFACE PANEL IN TRAFFIC SIGNAL CONTROLLER CABINET
28. INSTALL INTERCONNECT CENTER, PATCH PANEL, JUMPERS, AND FUSION SPLICE CABLE IN CABINET
29. INSTALL UNDERGROUND SPLICE ENCLOSURE
30. INSTALL AERIAL SPLICE ENCLOSURE
31. INSTALL POLE MOUNTED SPLICE CABINET
32. INSTALL BASE MOUNTED SPLICE CABINET (336) WITH EXTEND BASE
33. REMOVE EXISTING SPLICE CABINET
34. INSTALL CABINET FOUNDATION
35. REMOVE EXISTING CABINET FOUNDATION
36. INSTALL CCTV CAMERA ASSEMBLY
37. INSTALL CCTV CAMERA WOOD POLE
38. INSTALL CCTV CAMERA METAL POLE AND FOUNDATION
39. INSTALL SPECIAL OVERSIZED JUNCTION BOX WITH 100 FEET OF COMMUNICATIONS CABLE
40. INSTALL OVERSIZED JUNCTION BOX
41. INSTALL BRIDGE MOUNTED JUNCTION BOX
42. INSTALL WOOD POLE
43. REMOVE EXISTING WOOD POLE
44. INSTALL AERIAL GUY ASSEMBLY
45. INSTALL STANDARD GUY ASSEMBLY
46. INSTALL SIDEWALK GUY ASSEMBLY
47. INSTALL MESSENGER CABLE
48. REMOVE EXISTING COMMUNICATIONS CABLE AND MESSENGER CABLE
49. REMOVE EXISTING COMMUNICATIONS CABLE
50. INSTALL REEL END SPLICE
51. INSTALL CABLE STORAGE RACKS (SNOW SHOES) AND STORE 100 FEET OF CABLE
52. INSTALL DELINEATOR MARKER
53. STORE 50 FEET OF COMMUNICATIONS CABLE
54. LASH CABLE(S) TO EXISTING SIGNAL / COMMUNICATIONS CABLE
55. LASH CABLE(S) TO EXISTING MESSENGER CABLE
56. LASH CABLE(S) TO NEW MESSENGER CABLE
57. MODIFY EXISTING ELECTRICAL SERVICE
58. INSTALL NEW ELECTRICAL SERVICE FOR DMS
59. INSTALL NEW BASE MOUNTED CABINET (336)
60. SEAL ALL CONDUIT ENTERING JUNCTION BOXES AND CABINETS WITH MOLDABLE DUCT SEAL
61. INSTALL ETHERNET SWITCH
62. LOCATE EXISTING JUNCTION BOX AND CONNECT WITH NEW CONDUIT
63. BOND MESSENGER CABLE AND RISER TO POLE GROUND

Prepared for the Offices of:
Transportation Mobility and Safety Division
STATE OF NORTH CAROLINA DEPARTMENT OF TRANSPORTATION
Transportation Planning Branch
750 N. Greenfield Pkwy., Garner, NC 27529

CABLE ROUTING PLANS

DIV 3 NEW HANOVER CO. Near WILMINGTON

PLAN DATE:	January 2018	REVIEWED BY:	G. Green
PREPARED BY:	L. Neal	REVIEWED BY:	P. Marak

SCALE: NTS

REVISIONS	INIT.	DATE

SEAL
PRELIMINARY PLANS
DO NOT USE FOR CONSTRUCTION
SIGNATURE DATE
CADD FILE NAME

PROJECT REFERENCE NO.	SHEET NO.
R-2633D	ITS-38

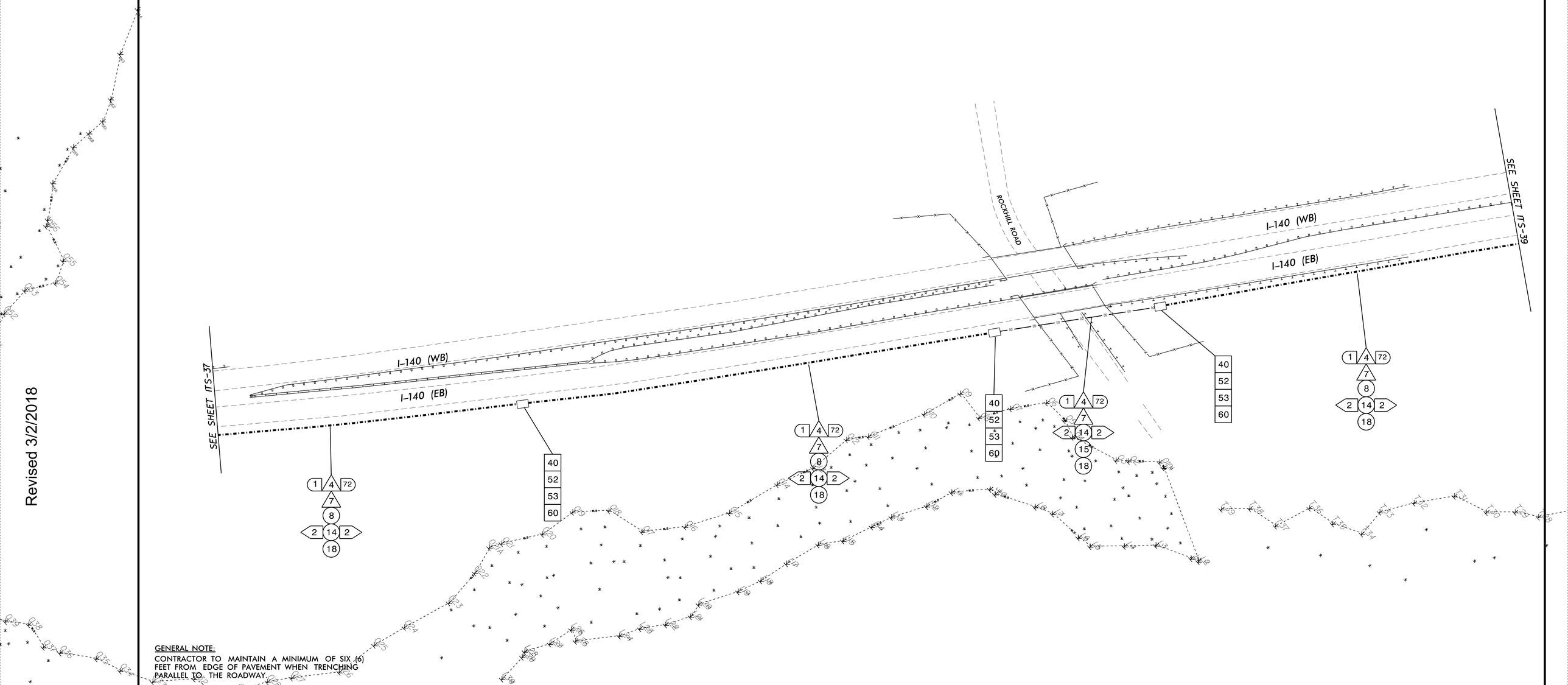

GENERAL NOTE:

CONTRACTOR TO MAINTAIN A MINIMUM OF SIX (6) FEET FROM EDGE OF PAVEMENT WHEN TRENCHING PARALLEL TO THE ROADWAY.

1. INSTALL REA, PE – 22, SHIELDED, TWISTED PAIR COMMUNICATIONS CABLE
2. INSTALL REA, PE – 38, (FIGURE – 8) SHIELDED, TWISTED PAIR COMMUNICATIONS CABLE
3. INSTALL 3-CONDUCTOR, CLASS B, STRANDED UNDERGROUND POWER CABLE
4. INSTALL SMFO CABLE
5. INSTALL CAT 5e COMMUNICATIONS CABLE
6. INSTALL FIBER OPTIC DROP CABLE
7. INSTALL TRACER WIRE
8. TRENCH
9. INSTALL PVC CONDUIT
10. INSTALL RIGID, GALVANIZED STEEL CONDUIT
11. INSTALL RIGID, GALVANIZED STEEL RISER WITH WEATHERHEAD
12. INSTALL RIGID, GALVANIZED STEEL RISER WITH FIBER OPTIC CABLE SEAL
13. INSTALL OUTER-DUCT POLYETHYLENE CONDUIT
14. INSTALL POLYETHYLENE CONDUIT
15. DIRECTIONAL DRILL CONDUIT
16. INSTALL BRIDGE MOUNTED FIBERGLASS CONDUIT, WITH FOUR-WAY INNERDUCT INSERT
17. INSTALL CABLE(S) IN EXISTING CONDUIT
18. INSTALL CABLE(S) IN NEW CONDUIT
19. INSTALL CABLE(S) IN EXISTING RISER
20. INSTALL CABLE(S) IN NEW RISER
21. INSTALL CABLE(S) IN EXISTING CONDUIT STUBOUTS
22. INSTALL NEW CONDUIT INTO EXISTING CABINET BASE (USE EXISTING CONDUIT STUB-OUTS WHEN AVAILABLE)
23. INSTALL NEW RISER INTO EXISTING CABINET BASE (USE EXISTING CONDUIT STUB-OUTS WHEN AVAILABLE)
24. INSTALL NEW CONDUIT INTO EXISTING POLE MOUNTED CABINET
25. INSTALL NEW RISER INTO EXISTING POLE MOUNTED CABINET
26. TERMINATE COMMUNICATIONS CABLE ON EXISTING TELEMETRY INTERFACE PANEL IN TRAFFIC SIGNAL CONTROLLER CABINET
27. INSTALL NEW TELEMETRY INTERFACE PANEL IN TRAFFIC SIGNAL CONTROLLER CABINET
28. INSTALL INTERCONNECT CENTER, PATCH PANEL, JUMPERS, AND FUSION SPLICE CABLE IN CABINET
29. INSTALL UNDERGROUND SPLICE ENCLOSURE
30. INSTALL AERIAL SPLICE ENCLOSURE
31. INSTALL POLE MOUNTED SPLICE CABINET
32. INSTALL BASE MOUNTED SPLICE CABINET (336) WITH EXTEND BASE
33. REMOVE EXISTING SPLICE CABINET
34. INSTALL CABINET FOUNDATION
35. REMOVE EXISTING CABINET FOUNDATION
36. INSTALL CCTV CAMERA ASSEMBLY
37. INSTALL CCTV CAMERA WOOD POLE
38. INSTALL CCTV CAMERA METAL POLE AND FOUNDATION
39. INSTALL SPECIAL OVERSIZED JUNCTION BOX WITH 100 FEET OF COMMUNICATIONS CABLE
40. INSTALL OVERSIZED JUNCTION BOX
41. INSTALL BRIDGE MOUNTED JUNCTION BOX
42. INSTALL WOOD POLE
43. REMOVE EXISTING WOOD POLE
44. INSTALL AERIAL GUY ASSEMBLY
45. INSTALL STANDARD GUY ASSEMBLY
46. INSTALL SIDEWALK GUY ASSEMBLY
47. INSTALL MESSENGER CABLE
48. REMOVE EXISTING COMMUNICATIONS CABLE AND MESSENGER CABLE
49. REMOVE EXISTING COMMUNICATIONS CABLE
50. INSTALL REEL END SPLICE
51. INSTALL CABLE STORAGE RACKS (SNOW SHOES) AND STORE 100 FEET OF CABLE
52. INSTALL DELINEATOR MARKER
53. STORE 50 FEET OF COMMUNICATIONS CABLE
54. LASH CABLE(S) TO EXISTING SIGNAL / COMMUNICATIONS CABLE
55. LASH CABLE(S) TO EXISTING MESSENGER CABLE
56. LASH CABLE(S) TO NEW MESSENGER CABLE
57. MODIFY EXISTING ELECTRICAL SERVICE
58. INSTALL NEW ELECTRICAL SERVICE FOR DMS
59. INSTALL NEW BASE MOUNTED CABINET (336)
60. SEAL ALL CONDUIT ENTERING JUNCTION BOXES AND CABINETS WITH MOLDABLE DUCT SEAL
61. INSTALL ETHERNET SWITCH
62. LOCATE EXISTING JUNCTION BOX AND CONNECT WITH NEW CONDUIT
63. BOND MESSENGER CABLE AND RISER TO POLE GROUND

Prepared for the Offices of:

Transportation Mobility and Safety Division
STATE OF NORTH CAROLINA DEPARTMENT OF TRANSPORTATION
Transportation Building

750 N. Greenfield Pkwy., Garner, NC 27529

SCALE: NTS

CABLE ROUTING PLANS

DIV 3 NEW HANOVER CO. Near WILMINGTON

PLAN DATE:	January 2018	REVIEWED BY:	G. Green
PREPARED BY:	L. Neal	REVIEWED BY:	P. Marak

REVISIONS	INIT.	DATE

SEAL

PRELIMINARY PLANS
DO NOT USE FOR CONSTRUCTION

SIGNATURE DATE

CADD FILE NAME

Revised 3/2/2018

PROJECT REFERENCE NO.	SHEET NO.
R-2633D	ITS-39

GENERAL NOTE:
CONTRACTOR TO MAINTAIN A MINIMUM OF SIX (6) FEET FROM EDGE OF PAVEMENT WHEN TRENCHING PARALLEL TO THE ROADWAY.

1. INSTALL REA, PE – 22, SHIELDED, TWISTED PAIR COMMUNICATIONS CABLE
2. INSTALL REA, PE – 38, (FIGURE – 8) SHIELDED, TWISTED, PAIR COMMUNICATIONS CABLE
3. INSTALL 3–CONDUCTOR, CLASS B, STRANDED UNDERGROUND POWER CABLE
4. INSTALL SMFO CABLE
5. INSTALL CAT 5e COMMUNICATIONS CABLE
6. INSTALL FIBER OPTIC DROP CABLE
7. INSTALL TRACER WIRE
8. TRENCH
9. INSTALL PVC CONDUIT
10. INSTALL RIGID, GALVANIZED STEEL CONDUIT
11. INSTALL RIGID, GALVANIZED STEEL RISER WITH WEATHERHEAD
12. INSTALL RIGID, GALVANIZED STEEL RISER WITH FIBER OPTIC CABLE SEAL
13. INSTALL OUTER–DUCT POLYETHYLENE CONDUIT
14. INSTALL POLYETHYLENE CONDUIT
15. DIRECTIONAL DRILL CONDUIT
16. INSTALL BRIDGE MOUNTED FIBERGLASS CONDUIT, WITH FOUR–WAY INNERDUCT INSERT
17. INSTALL CABLE(S) IN EXISTING CONDUIT
18. INSTALL CABLE(S) IN NEW CONDUIT
19. INSTALL CABLE(S) IN EXISTING RISER
20. INSTALL CABLE(S) IN NEW RISER
21. INSTALL CABLE(S) IN EXISTING CONDUIT STUBOUTS
22. INSTALL NEW CONDUIT INTO EXISTING CABINET BASE (USE EXISTING CONDUIT STUB–OUTS WHEN AVAILABLE)
23. INSTALL NEW RISER INTO EXISTING CABINET BASE (USE EXISTING CONDUIT STUB–OUTS WHEN AVAILABLE)
24. INSTALL NEW CONDUIT INTO EXISTING POLE MOUNTED CABINET
25. INSTALL NEW RISER INTO EXISTING POLE MOUNTED CABINET
26. TERMINATE COMMUNICATIONS CABLE ON EXISTING TELEMETRY INTERFACE PANEL IN TRAFFIC SIGNAL CONTROLLER CABINET
27. INSTALL NEW TELEMETRY INTERFACE PANEL IN TRAFFIC SIGNAL CONTROLLER CABINET
28. INSTALL INTERCONNECT CENTER, PATCH PANEL, JUMPERS, AND FUSION SPLICE CABLE IN CABINET
29. INSTALL UNDERGROUND SPLICE ENCLOSURE
30. INSTALL AERIAL SPLICE ENCLOSURE
31. INSTALL POLE MOUNTED SPLICE CABINET
32. INSTALL BASE MOUNTED SPLICE CABINET (336) WITH EXTEND BASE
33. REMOVE EXISTING SPLICE CABINET
34. INSTALL CABINET FOUNDATION
35. REMOVE EXISTING CABINET FOUNDATION
36. INSTALL CCTV CAMERA ASSEMBLY
37. INSTALL CCTV CAMERA WOOD POLE
38. INSTALL CCTV CAMERA METAL POLE AND FOUNDATION
39. INSTALL SPECIAL OVERSIZED JUNCTION BOX WITH 100 FEET OF COMMUNICATIONS CABLE
40. INSTALL OVERSIZED JUNCTION BOX
41. INSTALL BRIDGE MOUNTED JUNCTION BOX
42. INSTALL WOOD POLE
43. REMOVE EXISTING WOOD POLE
44. INSTALL AERIAL GUY ASSEMBLY
45. INSTALL STANDARD GUY ASSEMBLY
46. INSTALL SIDEWALK GUY ASSEMBLY
47. INSTALL MESSENGER CABLE
48. REMOVE EXISTING COMMUNICATIONS CABLE AND MESSENGER CABLE
49. REMOVE EXISTING COMMUNICATIONS CABLE
50. INSTALL REEL END SPLICE
51. INSTALL CABLE STORAGE RACKS (SNOW SHOES) AND STORE 100 FEET OF CABLE
52. INSTALL DELINEATOR MARKER
53. STORE 50 FEET OF COMMUNICATIONS CABLE
54. LASH CABLE(S) TO EXISTING SIGNAL / COMMUNICATIONS CABLE
55. LASH CABLE(S) TO EXISTING MESSENGER CABLE
56. LASH CABLE(S) TO NEW MESSENGER CABLE
57. MODIFY EXISTING ELECTRICAL SERVICE
58. INSTALL NEW ELECTRICAL SERVICE FOR DMS
59. INSTALL NEW BASE MOUNTED CABINET (336)
60. SEAL ALL CONDUIT ENTERING JUNCTION BOXES AND CABINETS WITH MOLDABLE DUCT SEAL
61. INSTALL ETHERNET SWITCH
62. LOCATE EXISTING JUNCTION BOX AND CONNECT WITH NEW CONDUIT
63. BOND MESSENGER CABLE AND RISER TO POLE GROUND

Prepared for the Offices of:
Transportation Mobility and Safety Division
STATE OF NORTH CAROLINA DEPARTMENT OF TRANSPORTATION
Intermodal Transportation Services Section
750 N. Greenfield Pkwy., Garner, NC 27529

CABLE ROUTING PLANS

DIV 3 NEW HANOVER CO. Near WILMINGTON

PLAN DATE:	January 2018	REVIEWED BY:	G. Green
PREPARED BY:	L. Neal	REVIEWED BY:	P. Marak

SCALE: NTS

REVISIONS	INIT.	DATE

SEAL
PRELIMINARY PLANS
DO NOT USE FOR CONSTRUCTION

SIGNATURE DATE
CADD FILE NAME

Revised 3/2/2018

PROJECT REFERENCE NO.	SHEET NO.
R-2633D	ITS-40

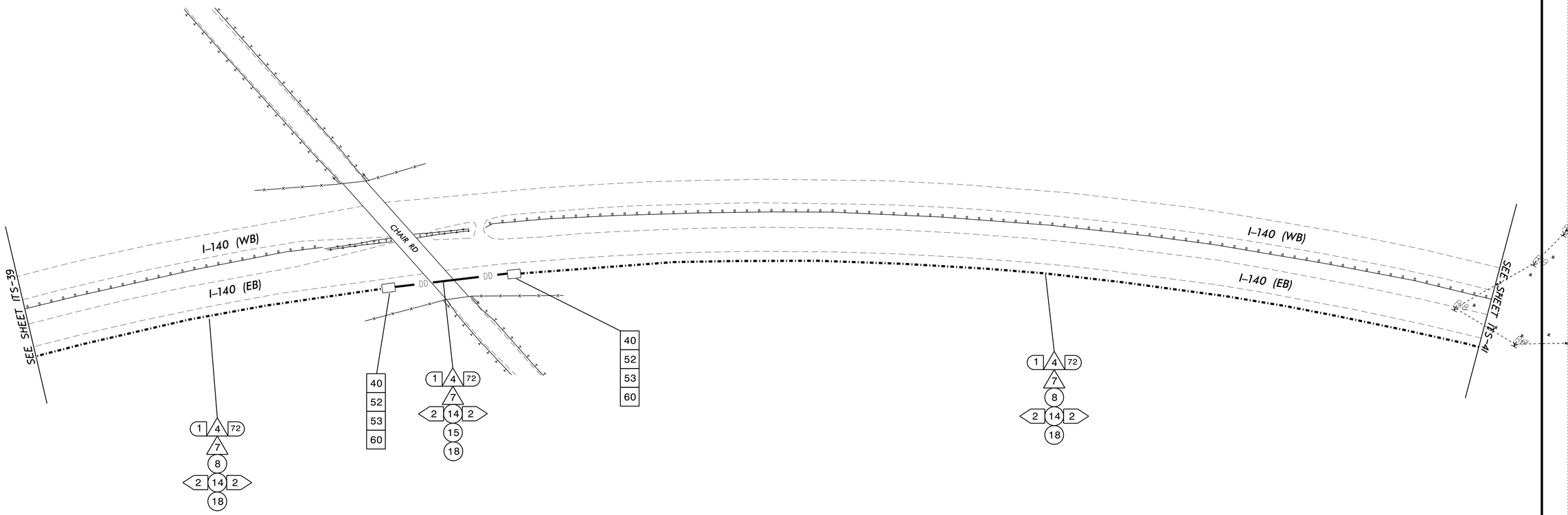

GENERAL NOTE:

CONTRACTOR TO MAINTAIN A MINIMUM OF SIX (6) FEET FROM EDGE OF PAVEMENT WHEN TRENCHING PARALLEL TO THE ROADWAY.

1. INSTALL REA, PE – 22, SHIELDED, TWISTED PAIR COMMUNICATIONS CABLE
2. INSTALL REA, PE – 38, (FIGURE – 8) SHIELDED, TWISTED PAIR COMMUNICATIONS CABLE
3. INSTALL 3-CONDUCTOR, CLASS B, STRANDED UNDERGROUND POWER CABLE
4. INSTALL SMFO CABLE
5. INSTALL CAT 5e COMMUNICATIONS CABLE
6. INSTALL FIBER OPTIC DROP CABLE
7. INSTALL TRACER WIRE
8. TRENCH
9. INSTALL PVC CONDUIT
10. INSTALL RIGID, GALVANIZED STEEL CONDUIT
11. INSTALL RIGID, GALVANIZED STEEL RISER WITH WEATHERHEAD
12. INSTALL RIGID, GALVANIZED STEEL RISER WITH FIBER OPTIC CABLE SEAL
13. INSTALL OUTER-DUCT POLYETHYLENE CONDUIT
14. INSTALL POLYETHYLENE CONDUIT
15. DIRECTIONAL DRILL CONDUIT
16. INSTALL BRIDGE MOUNTED FIBERGLASS CONDUIT, WITH FOUR-WAY INNERDUCT INSERT
17. INSTALL CABLE(S) IN EXISTING CONDUIT
18. INSTALL CABLE(S) IN NEW CONDUIT
19. INSTALL CABLE(S) IN EXISTING RISER
20. INSTALL CABLE(S) IN NEW RISER
21. INSTALL CABLE(S) IN EXISTING CONDUIT STUBOUTS
22. INSTALL NEW CONDUIT INTO EXISTING CABINET BASE (USE EXISTING CONDUIT STUB-OUTS WHEN AVAILABLE)
23. INSTALL NEW RISER INTO EXISTING CABINET BASE (USE EXISTING CONDUIT STUB-OUTS WHEN AVAILABLE)
24. INSTALL NEW CONDUIT INTO EXISTING POLE MOUNTED CABINET
25. INSTALL NEW RISER INTO EXISTING POLE MOUNTED CABINET
26. TERMINATE COMMUNICATIONS CABLE ON EXISTING TELEMETRY INTERFACE PANEL IN TRAFFIC SIGNAL CONTROLLER CABINET
27. INSTALL NEW TELEMETRY INTERFACE PANEL IN TRAFFIC SIGNAL CONTROLLER CABINET
28. INSTALL INTERCONNECT CENTER, PATCH PANEL, JUMPERS, AND FUSION SPLICE CABLE IN CABINET
29. INSTALL UNDERGROUND SPLICE ENCLOSURE
30. INSTALL AERIAL SPLICE ENCLOSURE
31. INSTALL POLE MOUNTED SPLICE CABINET
32. INSTALL BASE MOUNTED SPLICE CABINET (336) WITH EXTEND BASE
33. REMOVE EXISTING SPLICE CABINET
34. INSTALL CABINET FOUNDATION
35. REMOVE EXISTING CABINET FOUNDATION
36. INSTALL CCTV CAMERA ASSEMBLY
37. INSTALL CCTV CAMERA WOOD POLE
38. INSTALL CCTV CAMERA METAL POLE AND FOUNDATION
39. INSTALL SPECIAL OVERSIZED JUNCTION BOX WITH 100 FEET OF COMMUNICATIONS CABLE
40. INSTALL OVERSIZED JUNCTION BOX
41. INSTALL BRIDGE MOUNTED JUNCTION BOX
42. INSTALL WOOD POLE
43. REMOVE EXISTING WOOD POLE
44. INSTALL AERIAL GUY ASSEMBLY
45. INSTALL STANDARD GUY ASSEMBLY
46. INSTALL SIDEWALK GUY ASSEMBLY
47. INSTALL MESSENGER CABLE
48. REMOVE EXISTING COMMUNICATIONS CABLE AND MESSENGER CABLE
49. REMOVE EXISTING COMMUNICATIONS CABLE
50. INSTALL REEL END SPLICE
51. INSTALL CABLE STORAGE RACKS (SNOW SHOES) AND STORE 100 FEET OF CABLE
52. INSTALL DELINEATOR MARKER
53. STORE 50 FEET OF COMMUNICATIONS CABLE
54. LASH CABLE(S) TO EXISTING SIGNAL / COMMUNICATIONS CABLE
55. LASH CABLE(S) TO EXISTING MESSENGER CABLE
56. LASH CABLE(S) TO NEW MESSENGER CABLE
57. MODIFY EXISTING ELECTRICAL SERVICE
58. INSTALL NEW ELECTRICAL SERVICE FOR DMS
59. INSTALL NEW BASE MOUNTED CABINET (336)
60. SEAL ALL CONDUIT ENTERING JUNCTION BOXES AND CABINETS WITH MOLDABLE DUCT SEAL
61. INSTALL ETHERNET SWITCH
62. LOCATE EXISTING JUNCTION BOX AND CONNECT WITH NEW CONDUIT
63. BOND MESSENGER CABLE AND RISER TO POLE GROUND

Prepared for the Offices of:

Transportation Mobility and Safety Division
Intelligent Transportation Systems Section
STATE OF NORTH CAROLINA DEPARTMENT OF TRANSPORTATION

750 N. Greenfield Pkwy., Garner, NC 27529

CABLE ROUTING PLANS

DIV 3 NEW HANOVER CO. Near WILMINGTON

PLAN DATE:	January 2018	REVIEWED BY:	G. Green
PREPARED BY:	L. Neal	REVIEWED BY:	P. Marak

SCALE: NTS

REVISIONS	INIT.	DATE

SEAL

PRELIMINARY PLANS
DO NOT USE FOR CONSTRUCTION

SIGNATURE DATE

CADD FILE NAME

Revised 3/2/2018

Revised 3/2/2018

PROJECT REFERENCE NO.	SHEET NO.
R-2633D	ITS-41

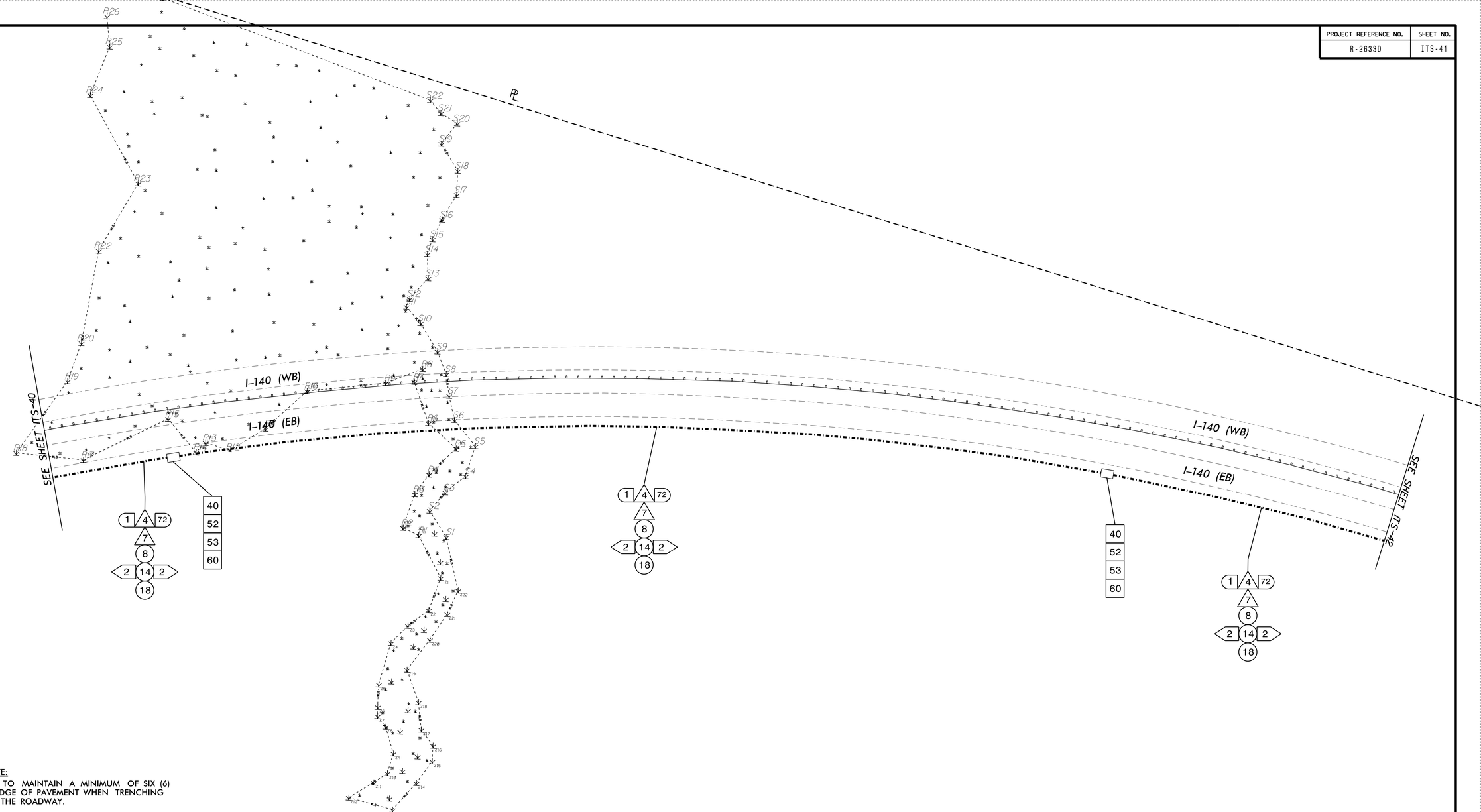

GENERAL NOTE:

CONTRACTOR TO MAINTAIN A MINIMUM OF SIX (6) FEET FROM EDGE OF PAVEMENT WHEN TRENCHING PARALLEL TO THE ROADWAY.

1. INSTALL REA, PE – 22, SHIELDED, TWISTED PAIR COMMUNICATIONS CABLE
2. INSTALL REA, PE – 38, (FIGURE – 8) SHIELDED, TWISTED PAIR COMMUNICATIONS CABLE
3. INSTALL 3-CONDUCTOR, CLASS B, STRANDED UNDERGROUND POWER CABLE
4. INSTALL SMFO CABLE
5. INSTALL CAT 5e COMMUNICATIONS CABLE
6. INSTALL FIBER OPTIC DROP CABLE
7. INSTALL TRACER WIRE
8. TRENCH
9. INSTALL PVC CONDUIT
10. INSTALL RIGID, GALVANIZED STEEL CONDUIT
11. INSTALL RIGID, GALVANIZED STEEL RISER WITH WEATHERHEAD
12. INSTALL RIGID, GALVANIZED STEEL RISER WITH FIBER OPTIC CABLE SEAL
13. INSTALL OUTER-DUCT POLYETHYLENE CONDUIT
14. INSTALL POLYETHYLENE CONDUIT
15. DIRECTIONAL DRILL CONDUIT
16. INSTALL BRIDGE MOUNTED FIBERGLASS CONDUIT, WITH FOUR-WAY INNERDUCT INSERT
17. INSTALL CABLE(S) IN EXISTING CONDUIT
18. INSTALL CABLE(S) IN NEW CONDUIT
19. INSTALL CABLE(S) IN EXISTING RISER
20. INSTALL CABLE(S) IN NEW RISER
21. INSTALL CABLE(S) IN EXISTING CONDUIT STUBOUTS
22. INSTALL NEW CONDUIT INTO EXISTING CABINET BASE (USE EXISTING CONDUIT STUB-OUTS WHEN AVAILABLE)
23. INSTALL NEW RISER INTO EXISTING CABINET BASE (USE EXISTING CONDUIT STUB-OUTS WHEN AVAILABLE)
24. INSTALL NEW CONDUIT INTO EXISTING POLE MOUNTED CABINET
25. INSTALL NEW RISER INTO EXISTING POLE MOUNTED CABINET
26. TERMINATE COMMUNICATIONS CABLE ON EXISTING TELEMETRY INTERFACE PANEL IN TRAFFIC SIGNAL CONTROLLER CABINET
27. INSTALL NEW TELEMETRY INTERFACE PANEL IN TRAFFIC SIGNAL CONTROLLER CABINET
28. INSTALL INTERCONNECT CENTER, PATCH PANEL, JUMPERS, AND FUSION SPLICE CABLE IN CABINET
29. INSTALL UNDERGROUND SPLICE ENCLOSURE
30. INSTALL AERIAL SPLICE ENCLOSURE
31. INSTALL POLE MOUNTED SPLICE CABINET
32. INSTALL BASE MOUNTED SPLICE CABINET (336) WITH EXTEND BASE
33. REMOVE EXISTING SPLICE CABINET
34. INSTALL CABINET FOUNDATION
35. REMOVE EXISTING CABINET FOUNDATION
36. INSTALL CCTV CAMERA ASSEMBLY
37. INSTALL CCTV CAMERA WOOD POLE
38. INSTALL CCTV CAMERA METAL POLE AND FOUNDATION
39. INSTALL SPECIAL OVERSIZED JUNCTION BOX WITH 100 FEET OF COMMUNICATIONS CABLE
40. INSTALL OVERSIZED JUNCTION BOX
41. INSTALL BRIDGE MOUNTED JUNCTION BOX
42. INSTALL WOOD POLE
43. REMOVE EXISTING WOOD POLE
44. INSTALL AERIAL GUY ASSEMBLY
45. INSTALL STANDARD GUY ASSEMBLY
46. INSTALL SIDEWALK GUY ASSEMBLY
47. INSTALL MESSENGER CABLE
48. REMOVE EXISTING COMMUNICATIONS CABLE AND MESSENGER CABLE
49. REMOVE EXISTING COMMUNICATIONS CABLE
50. INSTALL REEL END SPLICE
51. INSTALL CABLE STORAGE RACKS (SNOW SHOES) AND STORE 100 FEET OF CABLE
52. INSTALL DELINEATOR MARKER
53. STORE 50 FEET OF COMMUNICATIONS CABLE
54. LASH CABLE(S) TO EXISTING SIGNAL / COMMUNICATIONS CABLE
55. LASH CABLE(S) TO EXISTING MESSENGER CABLE
56. LASH CABLE(S) TO NEW MESSENGER CABLE
57. MODIFY EXISTING ELECTRICAL SERVICE
58. INSTALL NEW ELECTRICAL SERVICE FOR DMS
59. INSTALL NEW BASE MOUNTED CABINET (336)
60. SEAL ALL CONDUIT ENTERING JUNCTION BOXES AND CABINETS WITH MOLDABLE DUCT SEAL
61. INSTALL ETHERNET SWITCH
62. LOCATE EXISTING JUNCTION BOX AND CONNECT WITH NEW CONDUIT
63. BOND MESSENGER CABLE AND RISER TO POLE GROUND

Prepared for the Offices of:

Transportation Mobility and Safety Division
Intelligent Transportation Systems Section
STATE OF NORTH CAROLINA DEPARTMENT OF TRANSPORTATION

750 N. Greenfield Pkwy., Garner, NC 27529

N

SCALE: NTS

CABLE ROUTING PLANS

DIV 3 NEW HANOVER CO. Near WILMINGTON

PLAN DATE:	January 2018	REVIEWED BY:	G. Green
PREPARED BY:	L. Neal	REVIEWED BY:	P. Marak

REVISIONS	INIT.	DATE

SEAL

PRELIMINARY PLANS
DO NOT USE FOR CONSTRUCTION

SIGNATURE DATE

CADD FILE NAME

PROJECT REFERENCE NO.	SHEET NO.
R-2633D	ITS-42

Revised 3/2/2018

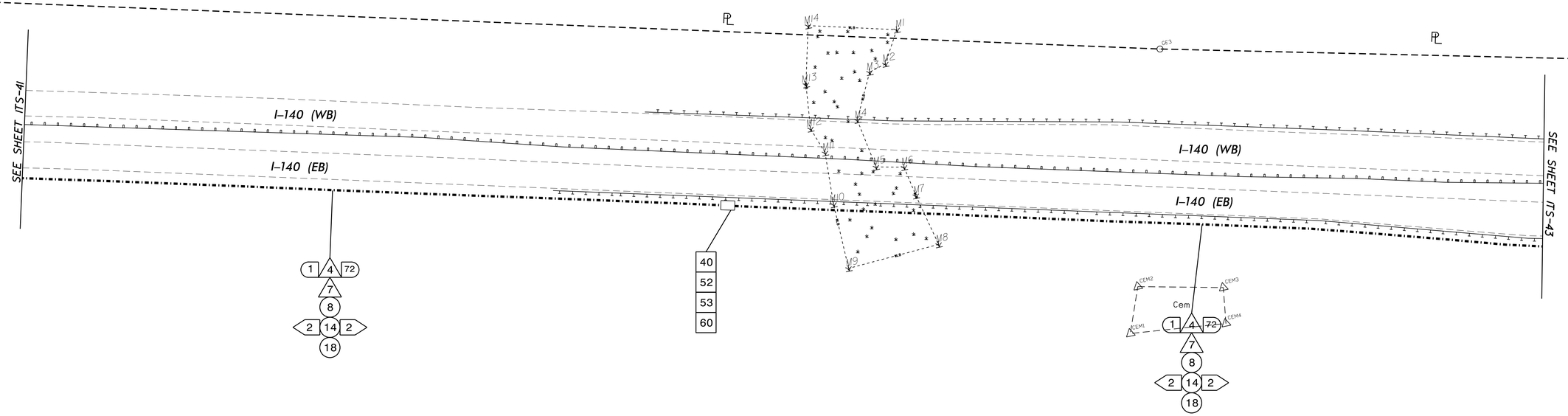

GENERAL NOTE:

CONTRACTOR TO MAINTAIN A MINIMUM OF SIX (6) FEET FROM EDGE OF PAVEMENT WHEN TRENCHING PARALLEL TO THE ROADWAY.

1. INSTALL REA, PE – 22, SHIELDED, TWISTED PAIR COMMUNICATIONS CABLE
2. INSTALL REA, PE – 38, (FIGURE – 8) SHIELDED, TWISTED PAIR COMMUNICATIONS CABLE
3. INSTALL 3–CONDUCTOR, CLASS B, STRANDED UNDERGROUND POWER CABLE
4. INSTALL SMFO CABLE
5. INSTALL CAT 5e COMMUNICATIONS CABLE
6. INSTALL FIBER OPTIC DROP CABLE
7. INSTALL TRACER WIRE
8. TRENCH
9. INSTALL PVC CONDUIT
10. INSTALL RIGID, GALVANIZED STEEL CONDUIT
11. INSTALL RIGID, GALVANIZED STEEL RISER WITH WEATHERHEAD
12. INSTALL RIGID, GALVANIZED STEEL RISER WITH FIBER OPTIC CABLE SEAL
13. INSTALL OUTER–DUCT POLYETHYLENE CONDUIT
14. INSTALL POLYETHYLENE CONDUIT
15. DIRECTIONAL DRILL CONDUIT
16. INSTALL BRIDGE MOUNTED FIBERGLASS CONDUIT, WITH FOUR–WAY INNERDUCT INSERT
17. INSTALL CABLE(S) IN EXISTING CONDUIT
18. INSTALL CABLE(S) IN NEW CONDUIT
19. INSTALL CABLE(S) IN EXISTING RISER
20. INSTALL CABLE(S) IN NEW RISER
21. INSTALL CABLE(S) IN EXISTING CONDUIT STUBOUTS
22. INSTALL NEW CONDUIT INTO EXISTING CABINET BASE (USE EXISTING CONDUIT STUB–OUTS WHEN AVAILABLE)
23. INSTALL NEW RISER INTO EXISTING CABINET BASE (USE EXISTING CONDUIT STUB–OUTS WHEN AVAILABLE)
24. INSTALL NEW CONDUIT INTO EXISTING POLE MOUNTED CABINET
25. INSTALL NEW RISER INTO EXISTING POLE MOUNTED CABINET
26. TERMINATE COMMUNICATIONS CABLE ON EXISTING TELEMETRY INTERFACE PANEL IN TRAFFIC SIGNAL CONTROLLER CABINET
27. INSTALL NEW TELEMETRY INTERFACE PANEL IN TRAFFIC SIGNAL CONTROLLER CABINET
28. INSTALL INTERCONNECT CENTER, PATCH PANEL, JUMPERS, AND FUSION SPLICE CABLE IN CABINET
29. INSTALL UNDERGROUND SPLICE ENCLOSURE
30. INSTALL AERIAL SPLICE ENCLOSURE
31. INSTALL POLE MOUNTED SPLICE CABINET
32. INSTALL BASE MOUNTED SPLICE CABINET (336) WITH EXTEND BASE
33. REMOVE EXISTING SPLICE CABINET
34. INSTALL CABINET FOUNDATION
35. REMOVE EXISTING CABINET FOUNDATION
36. INSTALL CCTV CAMERA ASSEMBLY
37. INSTALL CCTV CAMERA WOOD POLE
38. INSTALL CCTV CAMERA METAL POLE AND FOUNDATION
39. INSTALL SPECIAL OVERSIZED JUNCTION BOX WITH 100 FEET OF COMMUNICATIONS CABLE
40. INSTALL OVERSIZED JUNCTION BOX
41. INSTALL BRIDGE MOUNTED JUNCTION BOX
42. INSTALL WOOD POLE
43. REMOVE EXISTING WOOD POLE
44. INSTALL AERIAL GUY ASSEMBLY
45. INSTALL STANDARD GUY ASSEMBLY
46. INSTALL SIDEWALK GUY ASSEMBLY
47. INSTALL MESSENGER CABLE
48. REMOVE EXISTING COMMUNICATIONS CABLE AND MESSENGER CABLE
49. REMOVE EXISTING COMMUNICATIONS CABLE
50. INSTALL REEL END SPLICE
51. INSTALL CABLE STORAGE RACKS (SNOW SHOES) AND STORE 100 FEET OF CABLE
52. INSTALL DELINEATOR MARKER
53. STORE 50 FEET OF COMMUNICATIONS CABLE
54. LASH CABLE(S) TO EXISTING SIGNAL / COMMUNICATIONS CABLE
55. LASH CABLE(S) TO EXISTING MESSENGER CABLE
56. LASH CABLE(S) TO NEW MESSENGER CABLE
57. MODIFY EXISTING ELECTRICAL SERVICE
58. INSTALL NEW ELECTRICAL SERVICE FOR DMS
59. INSTALL NEW BASE MOUNTED CABINET (336)
60. SEAL ALL CONDUIT ENTERING JUNCTION BOXES AND CABINETS WITH MOLDABLE DUCT SEAL
61. INSTALL ETHERNET SWITCH
62. LOCATE EXISTING JUNCTION BOX AND CONNECT WITH NEW CONDUIT
63. BOND MESSENGER CABLE AND RISER TO POLE GROUND

Prepared for the Offices of:
STATE OF NORTH CAROLINA DEPARTMENT OF TRANSPORTATION
Transportation Mobility and Safety Division
Intelligent Transportation Systems Section
750 N. Greenfield Pkwy., Garner, NC 27529

CABLE ROUTING PLANS

DIV 3 NEW HANOVER CO. Near WILMINGTON

PLAN DATE:	January 2018	REVIEWED BY:	G. Green
PREPARED BY:	L. Neal	REVIEWED BY:	P. Marak

REVISIONS	INIT.	DATE

SCALE: NTS

SEAL: PRELIMINARY PLANS DO NOT USE FOR CONSTRUCTION

SIGNATURE DATE

CADD FILE NAME

PROJECT REFERENCE NO.	SHEET NO.
R-2633D	ITS-43

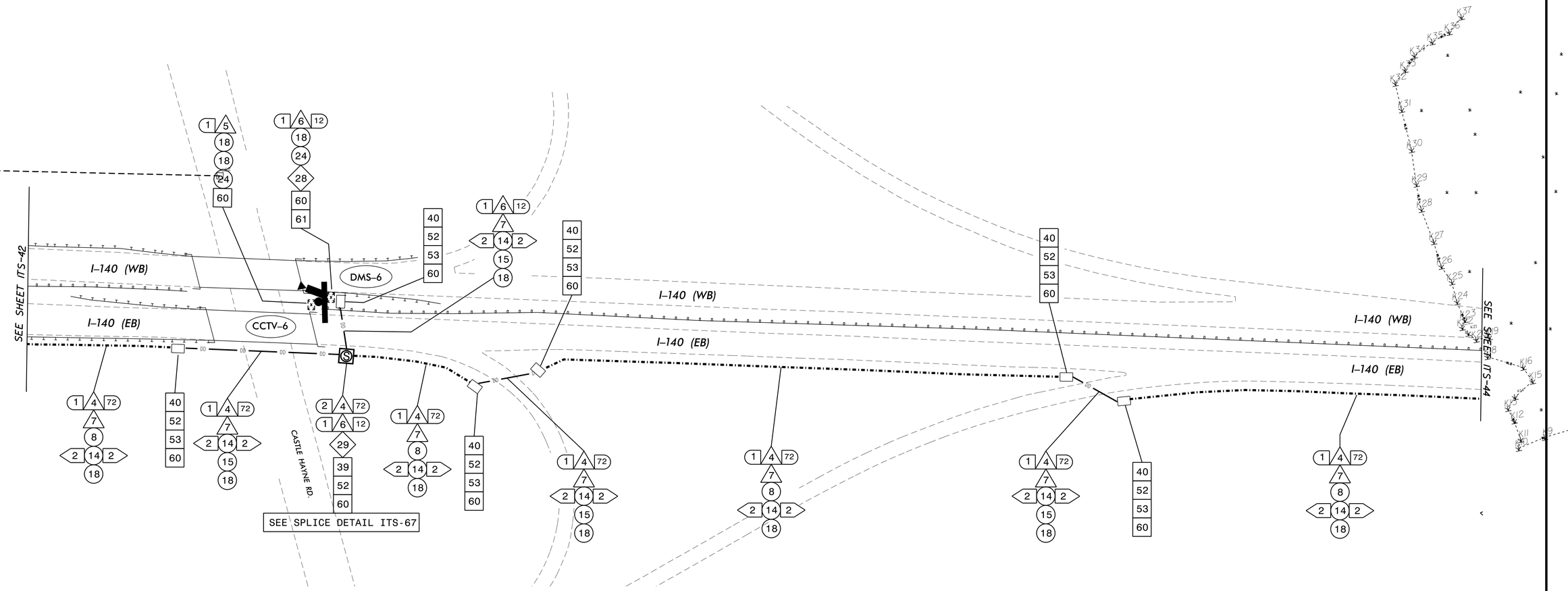

GENERAL NOTE:

CONTRACTOR TO MAINTAIN A MINIMUM OF SIX (6) FEET FROM EDGE OF PAVEMENT WHEN TRENCHING PARALLEL TO THE ROADWAY.

1. INSTALL REA, PE – 22, SHIELDED, TWISTED PAIR COMMUNICATIONS CABLE
2. INSTALL REA, PE – 38, (FIGURE – 8) SHIELDED, TWISTED PAIR COMMUNICATIONS CABLE
3. INSTALL 3–CONDUCTOR, CLASS B, STRANDED UNDERGROUND POWER CABLE
4. INSTALL SMFO CABLE
5. INSTALL CAT 5e COMMUNICATIONS CABLE
6. INSTALL FIBER OPTIC DROP CABLE
7. INSTALL TRACER WIRE
8. TRENCH
9. INSTALL PVC CONDUIT
10. INSTALL RIGID, GALVANIZED STEEL CONDUIT
11. INSTALL RIGID, GALVANIZED STEEL RISER WITH WEATHERHEAD
12. INSTALL RIGID, GALVANIZED STEEL RISER WITH FIBER OPTIC CABLE SEAL
13. INSTALL OUTER–DUCT POLYETHYLENE CONDUIT
14. INSTALL POLYETHYLENE CONDUIT
15. DIRECTIONAL DRILL CONDUIT
16. INSTALL BRIDGE MOUNTED FIBERGLASS CONDUIT, WITH FOUR–WAY INNERDUCT INSERT
17. INSTALL CABLE(S) IN EXISTING CONDUIT
18. INSTALL CABLE(S) IN NEW CONDUIT
19. INSTALL CABLE(S) IN EXISTING RISER
20. INSTALL CABLE(S) IN NEW RISER
21. INSTALL CABLE(S) IN EXISTING CONDUIT STUBOUTS
22. INSTALL NEW CONDUIT INTO EXISTING CABINET BASE (USE EXISTING CONDUIT STUB–OUTS WHEN AVAILABLE)
23. INSTALL NEW RISER INTO EXISTING CABINET BASE (USE EXISTING CONDUIT STUB–OUTS WHEN AVAILABLE)
24. INSTALL NEW CONDUIT INTO EXISTING POLE MOUNTED CABINET
25. INSTALL NEW RISER INTO EXISTING POLE MOUNTED CABINET
26. TERMINATE COMMUNICATIONS CABLE ON EXISTING TELEMETRY INTERFACE PANEL IN TRAFFIC SIGNAL CONTROLLER CABINET
27. INSTALL NEW TELEMETRY INTERFACE PANEL IN TRAFFIC SIGNAL CONTROLLER CABINET
28. INSTALL INTERCONNECT CENTER, PATCH PANEL, JUMPERS, AND FUSION SPLICE CABLE IN CABINET
29. INSTALL UNDERGROUND SPLICE ENCLOSURE
30. INSTALL AERIAL SPLICE ENCLOSURE
31. INSTALL POLE MOUNTED SPLICE CABINET
32. INSTALL BASE MOUNTED SPLICE CABINET (336) WITH EXTEND BASE
33. REMOVE EXISTING SPLICE CABINET
34. INSTALL CABINET FOUNDATION
35. REMOVE EXISTING CABINET FOUNDATION
36. INSTALL CCTV CAMERA ASSEMBLY
37. INSTALL CCTV CAMERA WOOD POLE
38. INSTALL CCTV CAMERA METAL POLE AND FOUNDATION
39. INSTALL SPECIAL OVERSIZED JUNCTION BOX WITH 100 FEET OF COMMUNICATIONS CABLE
40. INSTALL OVERSIZED JUNCTION BOX
41. INSTALL BRIDGE MOUNTED JUNCTION BOX
42. INSTALL WOOD POLE
43. REMOVE EXISTING WOOD POLE
44. INSTALL AERIAL GUY ASSEMBLY
45. INSTALL STANDARD GUY ASSEMBLY
46. INSTALL SIDEWALK GUY ASSEMBLY
47. INSTALL MESSENGER CABLE
48. REMOVE EXISTING COMMUNICATIONS CABLE AND MESSENGER CABLE
49. REMOVE EXISTING COMMUNICATIONS CABLE
50. INSTALL REEL END SPLICE
51. INSTALL CABLE STORAGE RACKS (SNOW SHOES) AND STORE 100 FEET OF CABLE
52. INSTALL DELINEATOR MARKER
53. STORE 50 FEET OF COMMUNICATIONS CABLE
54. LASH CABLE(S) TO EXISTING SIGNAL / COMMUNICATIONS CABLE
55. LASH CABLE(S) TO EXISTING MESSENGER CABLE
56. LASH CABLE(S) TO NEW MESSENGER CABLE
57. MODIFY EXISTING ELECTRICAL SERVICE
58. INSTALL NEW ELECTRICAL SERVICE FOR DMS
59. INSTALL NEW BASE MOUNTED CABINET (336)
60. SEAL ALL CONDUIT ENTERING JUNCTION BOXES AND CABINETS WITH MOLDABLE DUCT SEAL
61. INSTALL ETHERNET SWITCH
62. LOCATE EXISTING JUNCTION BOX AND CONNECT WITH NEW CONDUIT
63. BOND MESSENGER CABLE AND RISER TO POLE GROUND

Prepared for the Offices of:

STATE OF NORTH CAROLINA DEPARTMENT OF TRANSPORTATION

750 N. Greenfield Pkwy., Garner, NC 27529

CABLE ROUTING PLANS

DIV 3 NEW HANOVER CO. Near WILMINGTON

PLAN DATE:	January 2018	REVIEWED BY:	G. Green
PREPARED BY:	L. Neal	REVIEWED BY:	P. Marak

SCALE: NTS

REVISIONS	INIT.	DATE

SEAL

PRELIMINARY PLANS
DO NOT USE FOR CONSTRUCTION

SIGNATURE DATE

CADD FILE NAME

Revised 3/2/2018

Revised 3/2/2018

PROJECT REFERENCE NO.	SHEET NO.
R-2633D	ITS-44

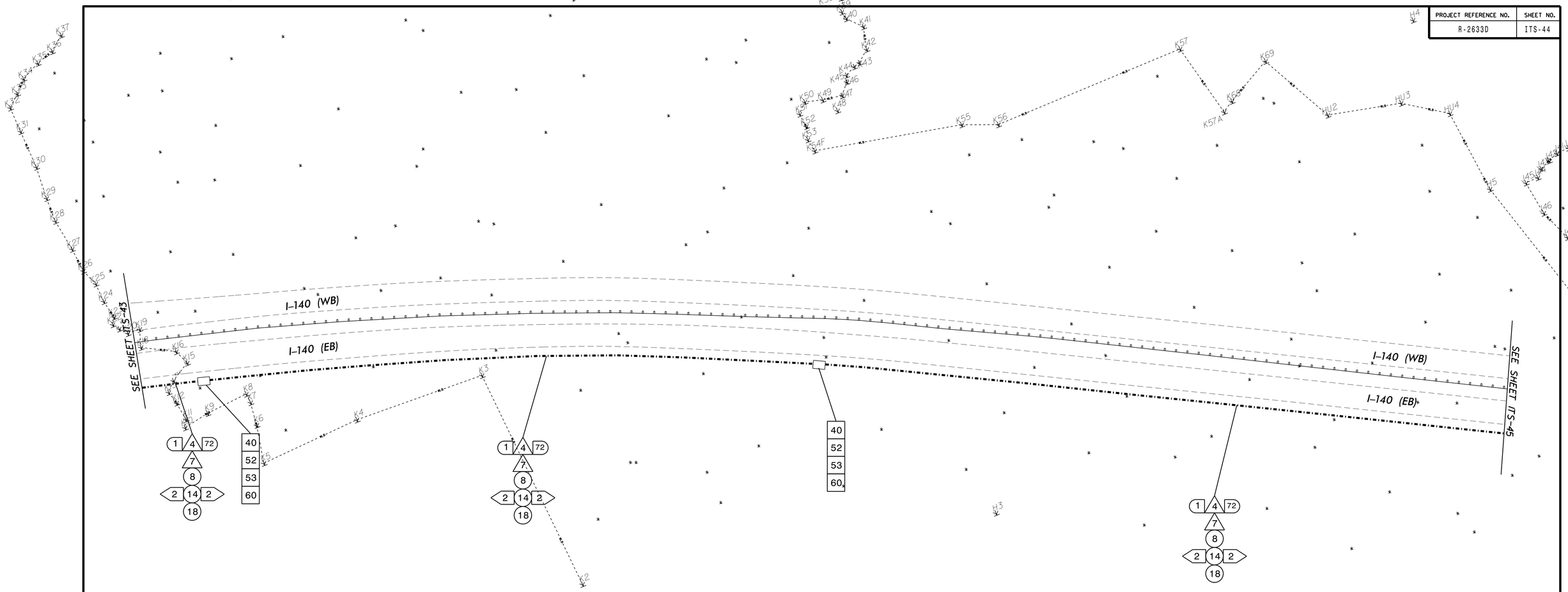

GENERAL NOTE:

CONTRACTOR TO MAINTAIN A MINIMUM OF SIX (6) FEET FROM EDGE OF PAVEMENT WHEN TRENCHING PARALLEL TO THE ROADWAY.

1. INSTALL REA, PE – 22, SHIELDED, TWISTED PAIR COMMUNICATIONS CABLE
2. INSTALL REA, PE – 38, (FIGURE – 8) SHIELDED, TWISTED PAIR COMMUNICATIONS CABLE
3. INSTALL 3-CONDUCTOR, CLASS B, STRANDED UNDERGROUND POWER CABLE
4. INSTALL SMFO CABLE
5. INSTALL CAT 5e COMMUNICATIONS CABLE
6. INSTALL FIBER OPTIC DROP CABLE
7. INSTALL TRACER WIRE
8. TRENCH
9. INSTALL PVC CONDUIT
10. INSTALL RIGID, GALVANIZED STEEL CONDUIT
11. INSTALL RIGID, GALVANIZED STEEL RISER WITH WEATHERHEAD
12. INSTALL RIGID, GALVANIZED STEEL RISER WITH FIBER OPTIC CABLE SEAL
13. INSTALL OUTER-DUCT POLYETHYLENE CONDUIT
14. INSTALL POLYETHYLENE CONDUIT
15. DIRECTIONAL DRILL CONDUIT
16. INSTALL BRIDGE MOUNTED FIBERGLASS CONDUIT, WITH FOUR-WAY INNERDUCT INSERT
17. INSTALL CABLE(S) IN EXISTING CONDUIT
18. INSTALL CABLE(S) IN NEW CONDUIT
19. INSTALL CABLE(S) IN EXISTING RISER
20. INSTALL CABLE(S) IN NEW RISER
21. INSTALL CABLE(S) IN EXISTING CONDUIT STUBOUTS
22. INSTALL NEW CONDUIT INTO EXISTING CABINET BASE (USE EXISTING CONDUIT STUB-OUTS WHEN AVAILABLE)
23. INSTALL NEW RISER INTO EXISTING CABINET BASE (USE EXISTING CONDUIT STUB-OUTS WHEN AVAILABLE)
24. INSTALL NEW CONDUIT INTO EXISTING POLE MOUNTED CABINET
25. INSTALL NEW RISER INTO EXISTING POLE MOUNTED CABINET
26. TERMINATE COMMUNICATIONS CABLE ON EXISTING TELEMETRY INTERFACE PANEL IN TRAFFIC SIGNAL CONTROLLER CABINET
27. INSTALL NEW TELEMETRY INTERFACE PANEL IN TRAFFIC SIGNAL CONTROLLER CABINET
28. INSTALL INTERCONNECT CENTER, PATCH PANEL, JUMPERS, AND FUSION SPLICE CABLE IN CABINET
29. INSTALL UNDERGROUND SPLICE ENCLOSURE
30. INSTALL AERIAL SPLICE ENCLOSURE
31. INSTALL POLE MOUNTED SPLICE CABINET
32. INSTALL BASE MOUNTED SPLICE CABINET (336) WITH EXTEND BASE
33. REMOVE EXISTING SPLICE CABINET
34. INSTALL CABINET FOUNDATION
35. REMOVE EXISTING CABINET FOUNDATION
36. INSTALL CCTV CAMERA ASSEMBLY
37. INSTALL CCTV CAMERA WOOD POLE
38. INSTALL CCTV CAMERA METAL POLE AND FOUNDATION
39. INSTALL SPECIAL OVERSIZED JUNCTION BOX WITH 100 FEET OF COMMUNICATIONS CABLE
40. INSTALL OVERSIZED JUNCTION BOX
41. INSTALL BRIDGE MOUNTED JUNCTION BOX
42. INSTALL WOOD POLE
43. REMOVE EXISTING WOOD POLE
44. INSTALL AERIAL GUY ASSEMBLY
45. INSTALL STANDARD GUY ASSEMBLY
46. INSTALL SIDEWALK GUY ASSEMBLY
47. INSTALL MESSENGER CABLE
48. REMOVE EXISTING COMMUNICATIONS CABLE AND MESSENGER CABLE
49. REMOVE EXISTING COMMUNICATIONS CABLE
50. INSTALL REEL END SPLICE
51. INSTALL CABLE STORAGE RACKS (SNOW SHOES) AND STORE 100 FEET OF CABLE
52. INSTALL DELINEATOR MARKER
53. STORE 50 FEET OF COMMUNICATIONS CABLE
54. LASH CABLE(S) TO EXISTING SIGNAL / COMMUNICATIONS CABLE
55. LASH CABLE(S) TO EXISTING MESSENGER CABLE
56. LASH CABLE(S) TO NEW MESSENGER CABLE
57. MODIFY EXISTING ELECTRICAL SERVICE
58. INSTALL NEW ELECTRICAL SERVICE FOR DMS
59. INSTALL NEW BASE MOUNTED CABINET (336)
60. SEAL ALL CONDUIT ENTERING JUNCTION BOXES AND CABINETS WITH MOLDABLE DUCT SEAL
61. INSTALL ETHERNET SWITCH
62. LOCATE EXISTING JUNCTION BOX AND CONNECT WITH NEW CONDUIT
63. BOND MESSENGER CABLE AND RISER TO POLE GROUND

Prepared for the Offices of:
Transportation Mobility and Safety Division
STATE OF NORTH CAROLINA DEPARTMENT OF TRANSPORTATION
Intelligent Transportation Systems Section
750 N. Greenfield Pkwy., Garner, NC 27529

CABLE ROUTING PLANS

DIV 3 NEW HANOVER CO. Near WILMINGTON

PLAN DATE:	January 2018	REVIEWED BY:	G. Green
PREPARED BY:	L. Neal	REVIEWED BY:	P. Marak

SCALE: NTS

REVISIONS	INIT.	DATE

SEAL

PRELIMINARY PLANS
DO NOT USE FOR CONSTRUCTION

SIGNATURE DATE

CADD FILE NAME

PROJECT REFERENCE NO.	SHEET NO.
R-2633D	ITS-45

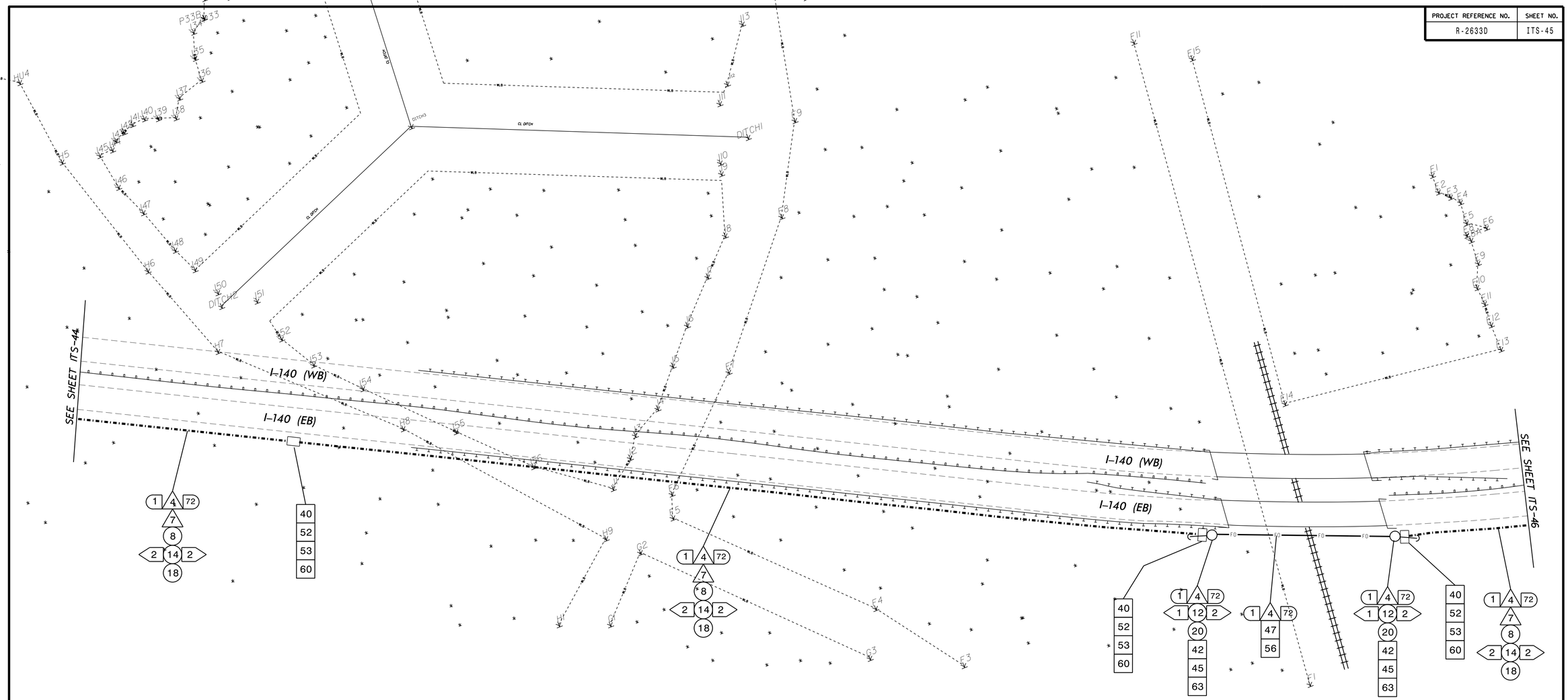

GENERAL NOTE:

CONTRACTOR TO MAINTAIN A MINIMUM OF SIX (6) FEET FROM EDGE OF PAVEMENT WHEN TRENCHING PARALLEL TO THE ROADWAY.

1. INSTALL REA, PE – 22, SHIELDED, TWISTED PAIR COMMUNICATIONS CABLE
2. INSTALL REA, PE – 38, (FIGURE – 8) SHIELDED, TWISTED PAIR COMMUNICATIONS CABLE
3. INSTALL 3-CONDUCTOR, CLASS B, STRANDED UNDERGROUND POWER CABLE
4. INSTALL SMFO CABLE
5. INSTALL CAT 5e COMMUNICATIONS CABLE
6. INSTALL FIBER OPTIC DROP CABLE
7. INSTALL TRACER WIRE
8. TRENCH
9. INSTALL PVC CONDUIT
10. INSTALL RIGID, GALVANIZED STEEL CONDUIT
11. INSTALL RIGID, GALVANIZED STEEL RISER WITH WEATHERHEAD
12. INSTALL RIGID, GALVANIZED STEEL RISER WITH FIBER OPTIC CABLE SEAL
13. INSTALL OUTER-DUCT POLYETHYLENE CONDUIT
14. INSTALL POLYETHYLENE CONDUIT
15. DIRECTIONAL DRILL CONDUIT
16. INSTALL BRIDGE MOUNTED FIBERGLASS CONDUIT, WITH FOUR-WAY INNERDUCT INSERT
17. INSTALL CABLE(S) IN EXISTING CONDUIT
18. INSTALL CABLE(S) IN NEW CONDUIT
19. INSTALL CABLE(S) IN EXISTING RISER
20. INSTALL CABLE(S) IN NEW RISER
21. INSTALL CABLE(S) IN EXISTING CONDUIT STUBOUTS
22. INSTALL NEW CONDUIT INTO EXISTING CABINET BASE (USE EXISTING CONDUIT STUB-OUTS WHEN AVAILABLE)
23. INSTALL NEW RISER INTO EXISTING CABINET BASE (USE EXISTING CONDUIT STUB-OUTS WHEN AVAILABLE)
24. INSTALL NEW CONDUIT INTO EXISTING POLE MOUNTED CABINET
25. INSTALL NEW RISER INTO EXISTING POLE MOUNTED CABINET
26. TERMINATE COMMUNICATIONS CABLE ON EXISTING TELEMETRY INTERFACE PANEL IN TRAFFIC SIGNAL CONTROLLER CABINET
27. INSTALL NEW TELEMETRY INTERFACE PANEL IN TRAFFIC SIGNAL CONTROLLER CABINET
28. INSTALL INTERCONNECT CENTER, PATCH PANEL, JUMPERS, AND FUSION SPLICE CABLE IN CABINET
29. INSTALL UNDERGROUND SPLICE ENCLOSURE
30. INSTALL AERIAL SPLICE ENCLOSURE
31. INSTALL POLE MOUNTED SPLICE CABINET
32. INSTALL BASE MOUNTED SPLICE CABINET (336) WITH EXTEND BASE
33. REMOVE EXISTING SPLICE CABINET
34. INSTALL CABINET FOUNDATION
35. REMOVE EXISTING CABINET FOUNDATION
36. INSTALL CCTV CAMERA ASSEMBLY
37. INSTALL CCTV CAMERA WOOD POLE
38. INSTALL CCTV CAMERA METAL POLE AND FOUNDATION
39. INSTALL SPECIAL OVERSIZED JUNCTION BOX WITH 100 FEET OF COMMUNICATIONS CABLE
40. INSTALL OVERSIZED JUNCTION BOX
41. INSTALL BRIDGE MOUNTED JUNCTION BOX
42. INSTALL WOOD POLE
43. REMOVE EXISTING WOOD POLE
44. INSTALL AERIAL GUY ASSEMBLY
45. INSTALL STANDARD GUY ASSEMBLY
46. INSTALL SIDEWALK GUY ASSEMBLY
47. INSTALL MESSENGER CABLE
48. REMOVE EXISTING COMMUNICATIONS CABLE AND MESSENGER CABLE
49. REMOVE EXISTING COMMUNICATIONS CABLE
50. INSTALL REEL END SPLICE
51. INSTALL CABLE STORAGE RACKS (SNOW SHOES) AND STORE 100 FEET OF CABLE
52. INSTALL DELINEATOR MARKER
53. STORE 50 FEET OF COMMUNICATIONS CABLE
54. LASH CABLE(S) TO EXISTING SIGNAL / COMMUNICATIONS CABLE
55. LASH CABLE(S) TO EXISTING MESSENGER CABLE
56. LASH CABLE(S) TO NEW MESSENGER CABLE
57. MODIFY EXISTING ELECTRICAL SERVICE
58. INSTALL NEW ELECTRICAL SERVICE FOR DMS
59. INSTALL NEW BASE MOUNTED CABINET (336)
60. SEAL ALL CONDUIT ENTERING JUNCTION BOXES AND CABINETS WITH MOLDABLE DUCT SEAL
61. INSTALL ETHERNET SWITCH
62. LOCATE EXISTING JUNCTION BOX AND CONNECT WITH NEW CONDUIT
63. BOND MESSENGER CABLE AND RISER TO POLE GROUND

Prepared for the Offices of:

Transportation Mobility and Safety Division
Intelligent Transportation Systems Section
STATE OF NORTH CAROLINA DEPARTMENT OF TRANSPORTATION

750 N. Greenfield Pkwy., Garner, NC 27529

CABLE ROUTING PLANS

DIV 3 NEW HANOVER CO. Near WILMINGTON

PLAN DATE:	January 2018	REVIEWED BY:	G. Green
PREPARED BY:	L. Neal	REVIEWED BY:	P. Marak

SCALE: NTS

REVISIONS	INIT.	DATE

SEAL

PRELIMINARY PLANS
DO NOT USE FOR CONSTRUCTION

SIGNATURE DATE

CADD FILE NAME

Revised 3/2/2018

PROJECT REFERENCE NO.	SHEET NO.
R-2633D	ITS-46

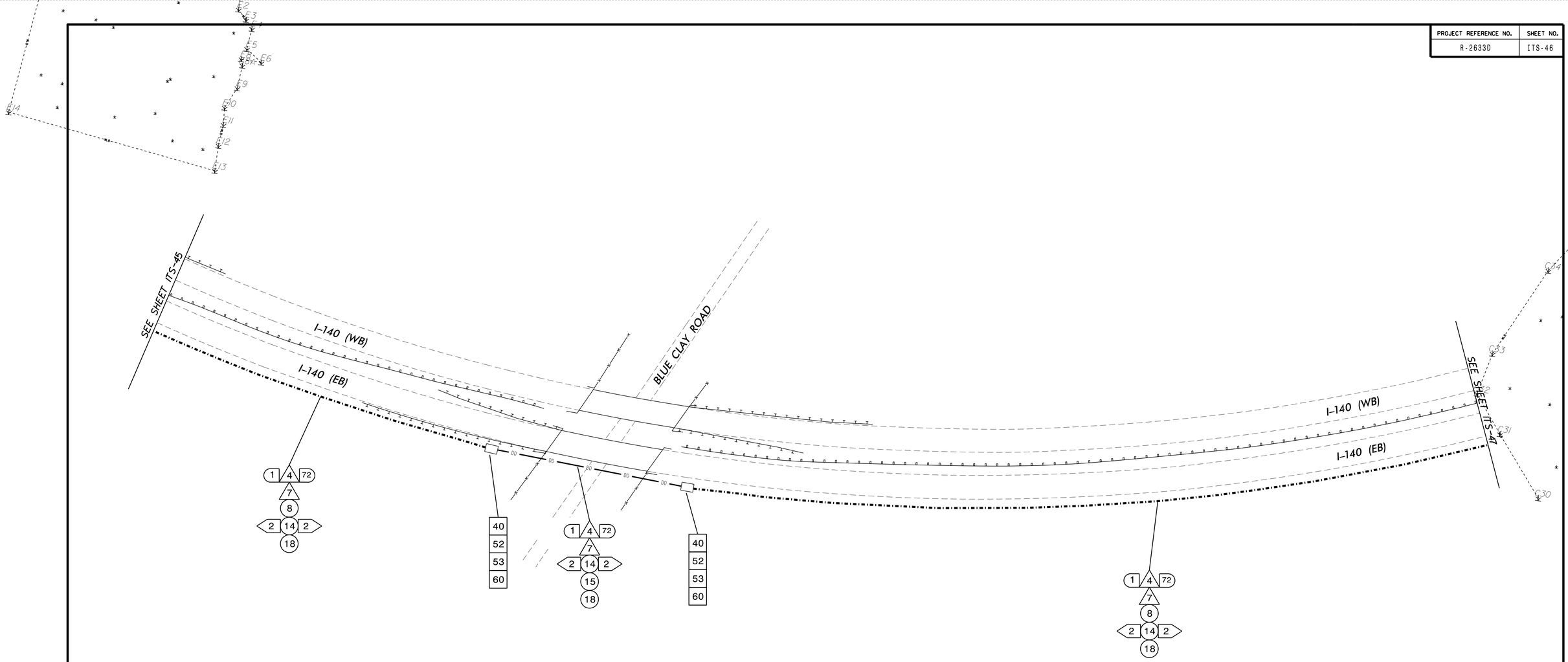

GENERAL NOTE:

CONTRACTOR TO MAINTAIN A MINIMUM OF SIX (6) FEET FROM EDGE OF PAVEMENT WHEN TRENCHING PARALLEL TO THE ROADWAY.

1. INSTALL REA, PE – 22, SHIELDED, TWISTED PAIR COMMUNICATIONS CABLE
2. INSTALL REA, PE – 38, (FIGURE – 8) SHIELDED, TWISTED PAIR COMMUNICATIONS CABLE
3. INSTALL 3–CONDUCTOR, CLASS B, STRANDED UNDERGROUND POWER CABLE
4. INSTALL SMFO CABLE
5. INSTALL CAT 5e COMMUNICATIONS CABLE
6. INSTALL FIBER OPTIC DROP CABLE
7. INSTALL TRACER WIRE
8. TRENCH
9. INSTALL PVC CONDUIT
10. INSTALL RIGID, GALVANIZED STEEL CONDUIT
11. INSTALL RIGID, GALVANIZED STEEL RISER WITH WEATHERHEAD
12. INSTALL RIGID, GALVANIZED STEEL RISER WITH FIBER OPTIC CABLE SEAL
13. INSTALL OUTER–DUCT POLYETHYLENE CONDUIT
14. INSTALL POLYETHYLENE CONDUIT
15. DIRECTIONAL DRILL CONDUIT
16. INSTALL BRIDGE MOUNTED FIBERGLASS CONDUIT, WITH FOUR–WAY INNERDUCT INSERT
17. INSTALL CABLE(S) IN EXISTING CONDUIT
18. INSTALL CABLE(S) IN NEW CONDUIT
19. INSTALL CABLE(S) IN EXISTING RISER
20. INSTALL CABLE(S) IN NEW RISER
21. INSTALL CABLE(S) IN EXISTING CONDUIT STUBOUTS
22. INSTALL NEW CONDUIT INTO EXISTING CABINET BASE (USE EXISTING CONDUIT STUB–OUTS WHEN AVAILABLE)
23. INSTALL NEW RISER INTO EXISTING CABINET BASE (USE EXISTING CONDUIT STUB–OUTS WHEN AVAILABLE)
24. INSTALL NEW CONDUIT INTO EXISTING POLE MOUNTED CABINET
25. INSTALL NEW RISER INTO EXISTING POLE MOUNTED CABINET
26. TERMINATE COMMUNICATIONS CABLE ON EXISTING TELEMETRY INTERFACE PANEL IN TRAFFIC SIGNAL CONTROLLER CABINET
27. INSTALL NEW TELEMETRY INTERFACE PANEL IN TRAFFIC SIGNAL CONTROLLER CABINET
28. INSTALL INTERCONNECT CENTER, PATCH PANEL, JUMPERS, AND FUSION SPLICE CABLE IN CABINET
29. INSTALL UNDERGROUND SPLICE ENCLOSURE
30. INSTALL AERIAL SPLICE ENCLOSURE
31. INSTALL POLE MOUNTED SPLICE CABINET
32. INSTALL BASE MOUNTED SPLICE CABINET (336) WITH EXTEND BASE
33. REMOVE EXISTING SPLICE CABINET
34. INSTALL CABINET FOUNDATION
35. REMOVE EXISTING CABINET FOUNDATION
36. INSTALL CCTV CAMERA ASSEMBLY
37. INSTALL CCTV CAMERA WOOD POLE
38. INSTALL CCTV CAMERA METAL POLE AND FOUNDATION
39. INSTALL SPECIAL OVERSIZED JUNCTION BOX WITH 100 FEET OF COMMUNICATIONS CABLE
40. INSTALL OVERSIZED JUNCTION BOX
41. INSTALL BRIDGE MOUNTED JUNCTION BOX
42. INSTALL WOOD POLE
43. REMOVE EXISTING WOOD POLE
44. INSTALL AERIAL GUY ASSEMBLY
45. INSTALL STANDARD GUY ASSEMBLY
46. INSTALL SIDEWALK GUY ASSEMBLY
47. INSTALL MESSENGER CABLE
48. REMOVE EXISTING COMMUNICATIONS CABLE AND MESSENGER CABLE
49. REMOVE EXISTING COMMUNICATIONS CABLE
50. INSTALL REEL END SPLICE
51. INSTALL CABLE STORAGE RACKS (SNOW SHOES) AND STORE 100 FEET OF CABLE
52. INSTALL DELINEATOR MARKER
53. STORE 50 FEET OF COMMUNICATIONS CABLE
54. LASH CABLE(S) TO EXISTING SIGNAL / COMMUNICATIONS CABLE
55. LASH CABLE(S) TO EXISTING MESSENGER CABLE
56. LASH CABLE(S) TO NEW MESSENGER CABLE
57. MODIFY EXISTING ELECTRICAL SERVICE
58. INSTALL NEW ELECTRICAL SERVICE FOR DMS
59. INSTALL NEW BASE MOUNTED CABINET (336)
60. SEAL ALL CONDUIT ENTERING JUNCTION BOXES AND CABINETS WITH MOLDABLE DUCT SEAL
61. INSTALL ETHERNET SWITCH
62. LOCATE EXISTING JUNCTION BOX AND CONNECT WITH NEW CONDUIT
63. BOND MESSENGER CABLE AND RISER TO POLE GROUND

Revised 3/2/2018

Prepared for the Offices of:
Transportation Mobility and Safety Division
STATE OF NORTH CAROLINA DEPARTMENT OF TRANSPORTATION
Intermodal Transportation Systems Section
750 N. Greenfield Pkwy., Garner, NC 27529

CABLE ROUTING PLANS

DIV 3 NEW HANOVER CO. Near WILMINGTON

PLAN DATE:	January 2018	REVIEWED BY:	G. Green
PREPARED BY:	L. Neal	REVIEWED BY:	P. Marak

SCALE: NTS

REVISIONS	INIT.	DATE

SEAL: PRELIMINARY PLANS – DO NOT USE FOR CONSTRUCTION

SIGNATURE DATE

CADD FILE NAME

Revised 3/2/2018

PROJECT REFERENCE NO.	SHEET NO.
R-2633D	ITS-47

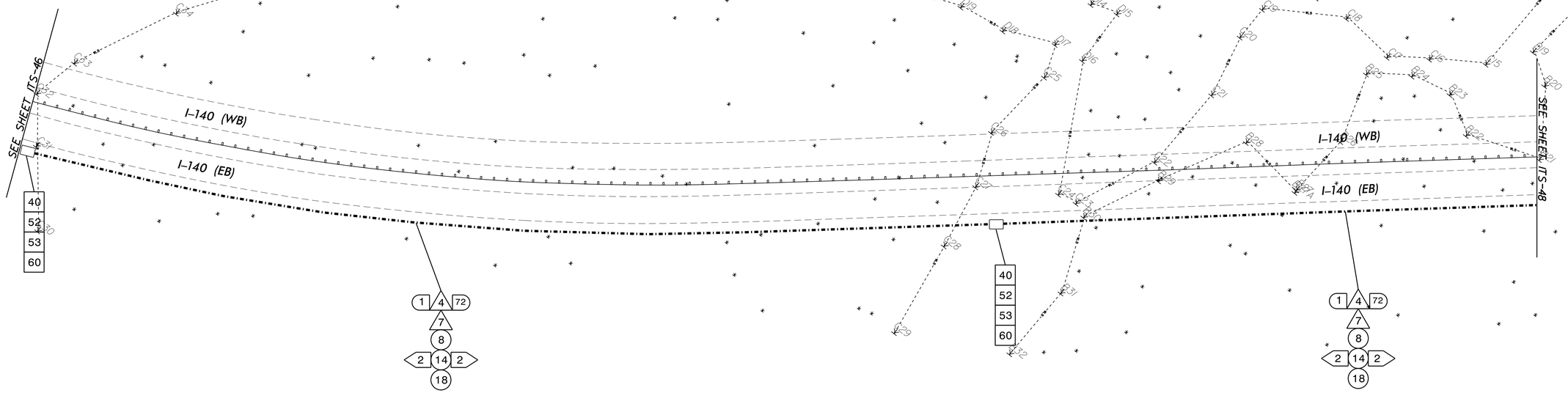

GENERAL NOTE:

CONTRACTOR TO MAINTAIN A MINIMUM OF SIX (6) FEET FROM EDGE OF PAVEMENT WHEN TRENCHING PARALLEL TO THE ROADWAY.

1. INSTALL REA, PE – 22, SHIELDED, TWISTED PAIR COMMUNICATIONS CABLE
2. INSTALL REA, PE – 38, (FIGURE – 8) SHIELDED, TWISTED PAIR COMMUNICATIONS CABLE
3. INSTALL 3-CONDUCTOR, CLASS B, STRANDED UNDERGROUND POWER CABLE
4. INSTALL SMFO CABLE
5. INSTALL CAT 5e COMMUNICATIONS CABLE
6. INSTALL FIBER OPTIC DROP CABLE
7. INSTALL TRACER WIRE
8. TRENCH
9. INSTALL PVC CONDUIT
10. INSTALL RIGID, GALVANIZED STEEL CONDUIT
11. INSTALL RIGID, GALVANIZED STEEL RISER WITH WEATHERHEAD
12. INSTALL RIGID, GALVANIZED STEEL RISER WITH FIBER OPTIC CABLE SEAL
13. INSTALL OUTER-DUCT POLYETHYLENE CONDUIT
14. INSTALL POLYETHYLENE CONDUIT
15. DIRECTIONAL DRILL CONDUIT
16. INSTALL BRIDGE MOUNTED FIBERGLASS CONDUIT, WITH FOUR-WAY INNERDUCT INSERT
17. INSTALL CABLE(S) IN EXISTING CONDUIT
18. INSTALL CABLE(S) IN NEW CONDUIT
19. INSTALL CABLE(S) IN EXISTING RISER
20. INSTALL CABLE(S) IN NEW RISER
21. INSTALL CABLE(S) IN EXISTING CONDUIT STUBOUTS
22. INSTALL NEW CONDUIT INTO EXISTING CABINET BASE (USE EXISTING CONDUIT STUB-OUTS WHEN AVAILABLE)
23. INSTALL NEW RISER INTO EXISTING CABINET BASE (USE EXISTING CONDUIT STUB-OUTS WHEN AVAILABLE)
24. INSTALL NEW CONDUIT INTO EXISTING POLE MOUNTED CABINET
25. INSTALL NEW RISER INTO EXISTING POLE MOUNTED CABINET
26. TERMINATE COMMUNICATIONS CABLE ON EXISTING TELEMETRY INTERFACE PANEL IN TRAFFIC SIGNAL CONTROLLER CABINET
27. INSTALL NEW TELEMETRY INTERFACE PANEL IN TRAFFIC SIGNAL CONTROLLER CABINET
28. INSTALL INTERCONNECT CENTER, PATCH PANEL, JUMPERS, AND FUSION SPLICE CABLE IN CABINET
29. INSTALL UNDERGROUND SPLICE ENCLOSURE
30. INSTALL AERIAL SPLICE ENCLOSURE
31. INSTALL POLE MOUNTED SPLICE CABINET
32. INSTALL BASE MOUNTED SPLICE CABINET (336) WITH EXTEND BASE
33. REMOVE EXISTING SPLICE CABINET
34. INSTALL CABINET FOUNDATION
35. REMOVE EXISTING CABINET FOUNDATION
36. INSTALL CCTV CAMERA ASSEMBLY
37. INSTALL CCTV CAMERA WOOD POLE
38. INSTALL CCTV CAMERA METAL POLE AND FOUNDATION
39. INSTALL SPECIAL OVERSIZED JUNCTION BOX WITH 100 FEET OF COMMUNICATIONS CABLE
40. INSTALL OVERSIZED JUNCTION BOX
41. INSTALL BRIDGE MOUNTED JUNCTION BOX
42. INSTALL WOOD POLE
43. REMOVE EXISTING WOOD POLE
44. INSTALL AERIAL GUY ASSEMBLY
45. INSTALL STANDARD GUY ASSEMBLY
46. INSTALL SIDEWALK GUY ASSEMBLY
47. INSTALL MESSENGER CABLE
48. REMOVE EXISTING COMMUNICATIONS CABLE AND MESSENGER CABLE
49. REMOVE EXISTING COMMUNICATIONS CABLE
50. INSTALL REEL END SPLICE
51. INSTALL CABLE STORAGE RACKS (SNOW SHOES) AND STORE 100 FEET OF CABLE
52. INSTALL DELINEATOR MARKER
53. STORE 50 FEET OF COMMUNICATIONS CABLE
54. LASH CABLE(S) TO EXISTING SIGNAL / COMMUNICATIONS CABLE
55. LASH CABLE(S) TO EXISTING MESSENGER CABLE
56. LASH CABLE(S) TO NEW MESSENGER CABLE
57. MODIFY EXISTING ELECTRICAL SERVICE
58. INSTALL NEW ELECTRICAL SERVICE FOR DMS
59. INSTALL NEW BASE MOUNTED CABINET (336)
60. SEAL ALL CONDUIT ENTERING JUNCTION BOXES AND CABINETS WITH MOLDABLE DUCT SEAL
61. INSTALL ETHERNET SWITCH
62. LOCATE EXISTING JUNCTION BOX AND CONNECT WITH NEW CONDUIT
63. BOND MESSENGER CABLE AND RISER TO POLE GROUND

Prepared for the Offices of:

STATE OF NORTH CAROLINA DEPARTMENT OF TRANSPORTATION
Transportation Mobility and Safety Division
Intermodal Transportation Systems Section

750 N. Greenfield Pkwy., Garner, NC 27529

SCALE: NTS

CABLE ROUTING PLANS

DIV 3 NEW HANOVER CO. Near WILMINGTON

PLAN DATE: January 2018		REVIEWED BY:	G. Green
PREPARED BY:	L. Neal	REVIEWED BY:	P. Marak

REVISIONS	INIT.	DATE

SEAL

PRELIMINARY PLANS
DO NOT USE FOR CONSTRUCTION

SIGNATURE DATE

CADD FILE NAME

PROJECT REFERENCE NO.	SHEET NO.
R-2633D	ITS-48

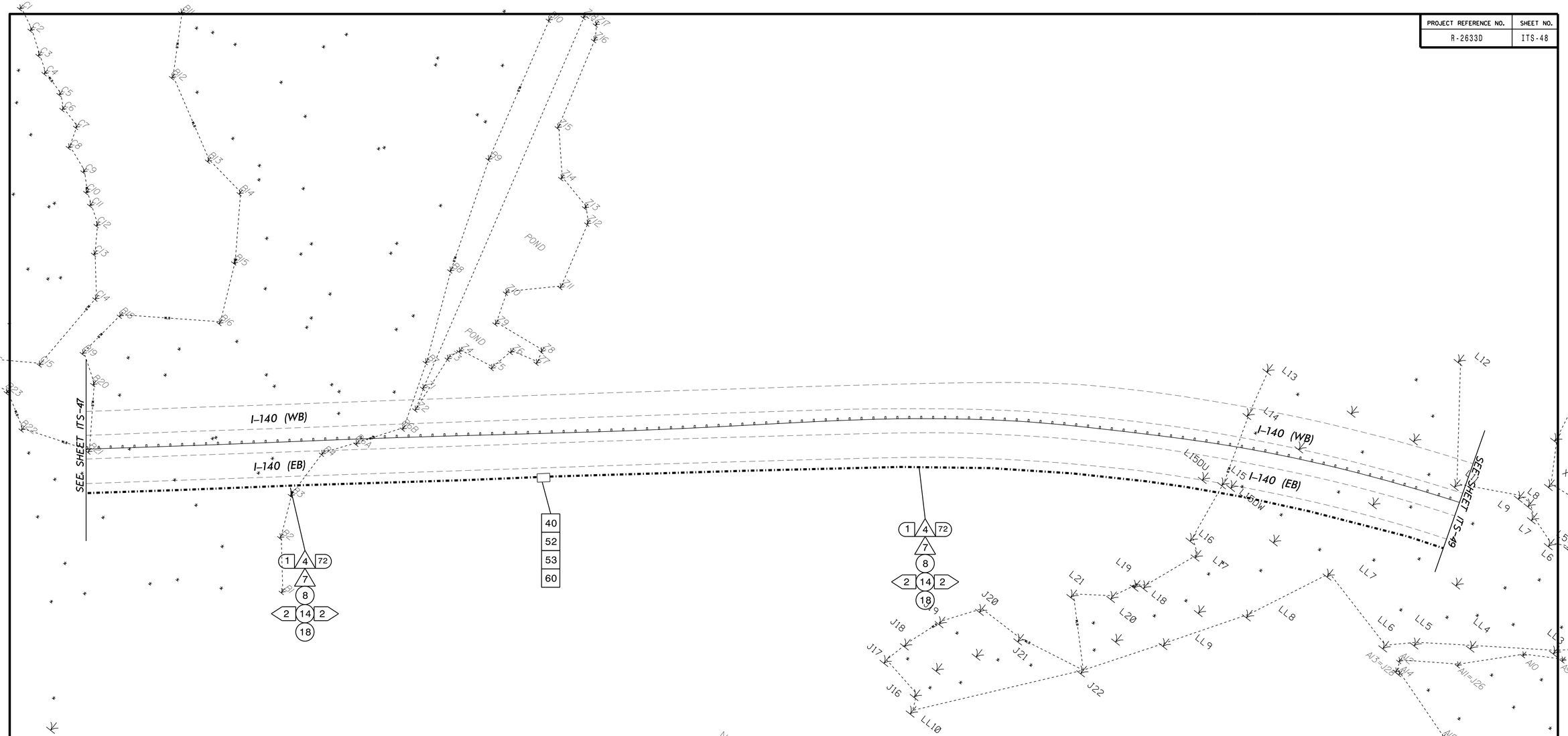

GENERAL NOTE:
CONTRACTOR TO MAINTAIN A MINIMUM OF SIX (6) FEET FROM EDGE OF PAVEMENT WHEN TRENCHING PARALLEL TO THE ROADWAY.

1. INSTALL REA, PE – 22, SHIELDED, TWISTED PAIR COMMUNICATIONS CABLE
2. INSTALL REA, PE – 38, (FIGURE – 8) SHIELDED, TWISTED PAIR COMMUNICATIONS CABLE
3. INSTALL 3-CONDUCTOR, CLASS B, STRANDED UNDERGROUND POWER CABLE
4. INSTALL SMFO CABLE
5. INSTALL CAT 5e COMMUNICATIONS CABLE
6. INSTALL FIBER OPTIC DROP CABLE
7. INSTALL TRACER WIRE
8. TRENCH
9. INSTALL PVC CONDUIT
10. INSTALL RIGID, GALVANIZED STEEL CONDUIT
11. INSTALL RIGID, GALVANIZED STEEL RISER WITH WEATHERHEAD
12. INSTALL RIGID, GALVANIZED STEEL RISER WITH FIBER OPTIC CABLE SEAL
13. INSTALL OUTER-DUCT POLYETHYLENE CONDUIT
14. INSTALL POLYETHYLENE CONDUIT
15. DIRECTIONAL DRILL CONDUIT
16. INSTALL BRIDGE MOUNTED FIBERGLASS CONDUIT, WITH FOUR-WAY INNERDUCT INSERT
17. INSTALL CABLE(S) IN EXISTING CONDUIT
18. INSTALL CABLE(S) IN NEW CONDUIT
19. INSTALL CABLE(S) IN EXISTING RISER
20. INSTALL CABLE(S) IN NEW RISER
21. INSTALL CABLE(S) IN EXISTING CONDUIT STUBOUTS
22. INSTALL NEW CONDUIT INTO EXISTING CABINET BASE (USE EXISTING CONDUIT STUB-OUTS WHEN AVAILABLE)
23. INSTALL NEW RISER INTO EXISTING CABINET BASE (USE EXISTING CONDUIT STUB-OUTS WHEN AVAILABLE)
24. INSTALL NEW CONDUIT INTO EXISTING POLE MOUNTED CABINET
25. INSTALL NEW RISER INTO EXISTING POLE MOUNTED CABINET
26. TERMINATE COMMUNICATIONS CABLE ON EXISTING TELEMETRY INTERFACE PANEL IN TRAFFIC SIGNAL CONTROLLER CABINET
27. INSTALL NEW TELEMETRY INTERFACE PANEL IN TRAFFIC SIGNAL CONTROLLER CABINET
28. INSTALL INTERCONNECT CENTER, PATCH PANEL, JUMPERS, AND FUSION SPLICE CABLE IN CABINET
29. INSTALL UNDERGROUND SPLICE ENCLOSURE
30. INSTALL AERIAL SPLICE ENCLOSURE
31. INSTALL POLE MOUNTED SPLICE CABINET
32. INSTALL BASE MOUNTED SPLICE CABINET (336) WITH EXTEND BASE
33. REMOVE EXISTING SPLICE CABINET
34. INSTALL CABINET FOUNDATION
35. REMOVE EXISTING CABINET FOUNDATION
36. INSTALL CCTV CAMERA ASSEMBLY
37. INSTALL CCTV CAMERA WOOD POLE
38. INSTALL CCTV CAMERA METAL POLE AND FOUNDATION
39. INSTALL SPECIAL OVERSIZED JUNCTION BOX WITH 100 FEET OF COMMUNICATIONS CABLE
40. INSTALL OVERSIZED JUNCTION BOX
41. INSTALL BRIDGE MOUNTED JUNCTION BOX
42. INSTALL WOOD POLE
43. REMOVE EXISTING WOOD POLE
44. INSTALL AERIAL GUY ASSEMBLY
45. INSTALL STANDARD GUY ASSEMBLY
46. INSTALL SIDEWALK GUY ASSEMBLY
47. INSTALL MESSENGER CABLE
48. REMOVE EXISTING COMMUNICATIONS CABLE AND MESSENGER CABLE
49. REMOVE EXISTING COMMUNICATIONS CABLE
50. INSTALL REEL END SPLICE
51. INSTALL CABLE STORAGE RACKS (SNOW SHOES) AND STORE 100 FEET OF CABLE
52. INSTALL DELINEATOR MARKER
53. STORE 50 FEET OF COMMUNICATIONS CABLE
54. LASH CABLE(S) TO EXISTING SIGNAL / COMMUNICATIONS CABLE
55. LASH CABLE(S) TO EXISTING MESSENGER CABLE
56. LASH CABLE(S) TO NEW MESSENGER CABLE
57. MODIFY EXISTING ELECTRICAL SERVICE
58. INSTALL NEW ELECTRICAL SERVICE FOR DMS
59. INSTALL NEW BASE MOUNTED CABINET (336)
60. SEAL ALL CONDUIT ENTERING JUNCTION BOXES AND CABINETS WITH MOLDABLE DUCT SEAL
61. INSTALL ETHERNET SWITCH
62. LOCATE EXISTING JUNCTION BOX AND CONNECT WITH NEW CONDUIT
63. BOND MESSENGER CABLE AND RISER TO POLE GROUND

Prepared for the Offices of:
STATE OF NORTH CAROLINA DEPARTMENT OF TRANSPORTATION
Transportation Mobility and Safety Division
Intermodal Transportation Section
750 N. Greenfield Pkwy., Garner, NC 27529

CABLE ROUTING PLANS

DIV 3 NEW HANOVER CO. Near WILMINGTON

PLAN DATE:	January 2018	REVIEWED BY:	G. Green
PREPARED BY:	L. Neal	REVIEWED BY:	P. Marak

SCALE: NTS

REVISIONS	INIT.	DATE

SEAL
PRELIMINARY PLANS
DO NOT USE FOR CONSTRUCTION
SIGNATURE DATE
CADD FILE NAME

Revised 3/2/2018

PROJECT REFERENCE NO.	SHEET NO.
R-2633D	ITS-49

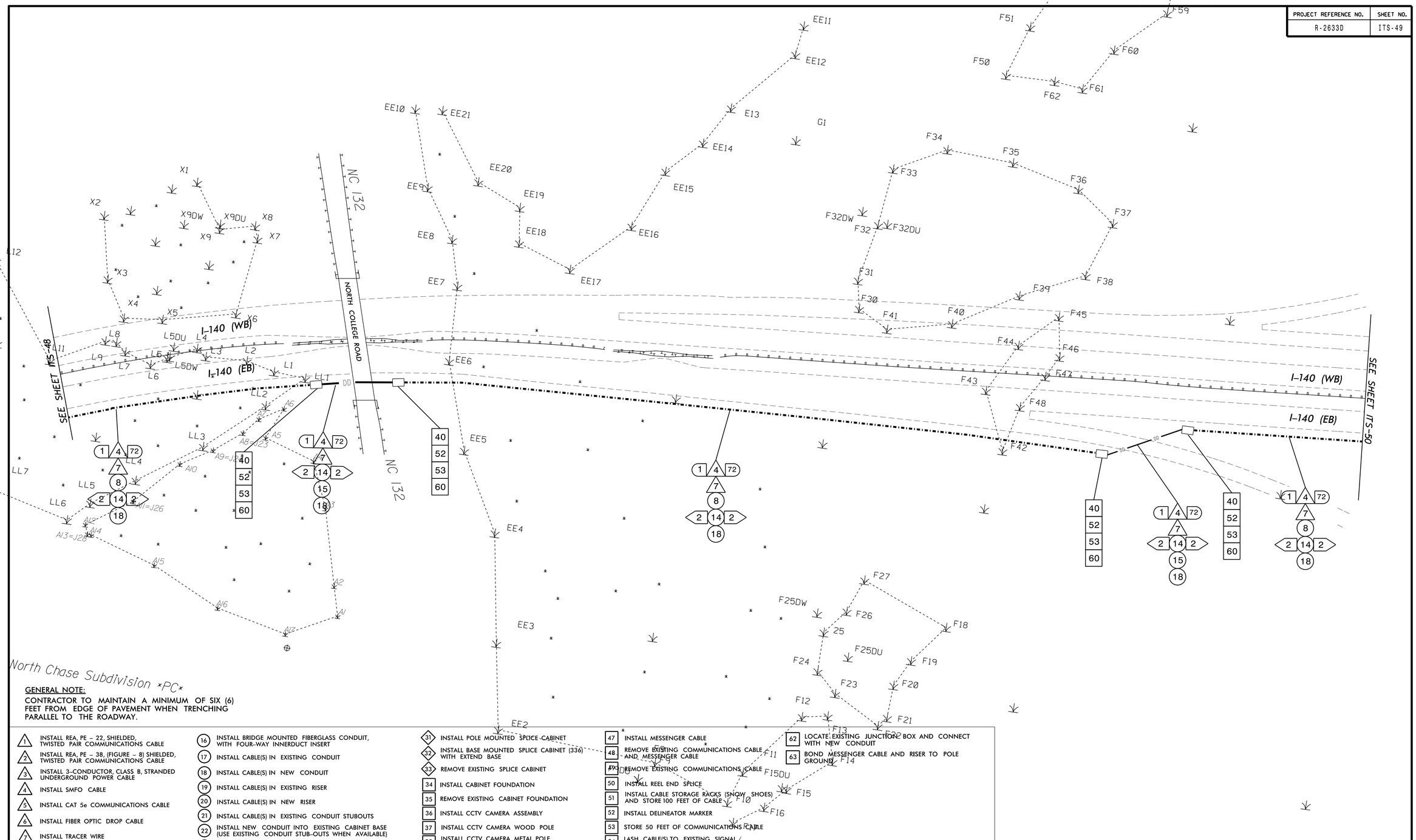

GENERAL NOTE:

CONTRACTOR TO MAINTAIN A MINIMUM OF SIX (6) FEET FROM EDGE OF PAVEMENT WHEN TRENCHING PARALLEL TO THE ROADWAY.

1. INSTALL REA, PE – 22, SHIELDED, TWISTED PAIR COMMUNICATIONS CABLE
2. INSTALL REA, PE – 38, (FIGURE – 8) SHIELDED, TWISTED PAIR COMMUNICATIONS CABLE
3. INSTALL 3-CONDUCTOR, CLASS B, STRANDED UNDERGROUND POWER CABLE
4. INSTALL SMFO CABLE
5. INSTALL CAT 5e COMMUNICATIONS CABLE
6. INSTALL FIBER OPTIC DROP CABLE
7. INSTALL TRACER WIRE
8. TRENCH
9. INSTALL PVC CONDUIT
10. INSTALL RIGID, GALVANIZED STEEL CONDUIT
11. INSTALL RIGID, GALVANIZED STEEL RISER WITH WEATHERHEAD
12. INSTALL RIGID, GALVANIZED STEEL RISER WITH FIBER OPTIC CABLE SEAL
13. INSTALL OUTER-DUCT POLYETHYLENE CONDUIT
14. INSTALL POLYETHYLENE CONDUIT
15. DIRECTIONAL DRILL CONDUIT
16. INSTALL BRIDGE MOUNTED FIBERGLASS CONDUIT, WITH FOUR-WAY INNERDUCT INSERT
17. INSTALL CABLE(S) IN EXISTING CONDUIT
18. INSTALL CABLE(S) IN NEW CONDUIT
19. INSTALL CABLE(S) IN EXISTING RISER
20. INSTALL CABLE(S) IN NEW RISER
21. INSTALL CABLE(S) IN EXISTING CONDUIT STUBOUTS
22. INSTALL NEW CONDUIT INTO EXISTING CABINET BASE (USE EXISTING CONDUIT STUB-OUTS WHEN AVAILABLE)
23. INSTALL NEW RISER INTO EXISTING CABINET BASE (USE EXISTING CONDUIT STUB-OUTS WHEN AVAILABLE)
24. INSTALL NEW CONDUIT INTO EXISTING POLE MOUNTED CABINET
25. INSTALL NEW RISER INTO EXISTING POLE MOUNTED CABINET
26. TERMINATE COMMUNICATIONS CABLE ON EXISTING TELEMETRY INTERFACE PANEL IN TRAFFIC SIGNAL CONTROLLER CABINET
27. INSTALL NEW TELEMETRY INTERFACE PANEL IN TRAFFIC SIGNAL CONTROLLER CABINET
28. INSTALL INTERCONNECT CENTER, PATCH PANEL, JUMPERS, AND FUSION SPLICE CABLE IN CABINET
29. INSTALL UNDERGROUND SPLICE ENCLOSURE
30. INSTALL AERIAL SPLICE ENCLOSURE
31. INSTALL POLE MOUNTED SPLICE CABINET
32. INSTALL BASE MOUNTED SPLICE CABINET (336) WITH EXTEND BASE
33. REMOVE EXISTING SPLICE CABINET
34. INSTALL CABINET FOUNDATION
35. REMOVE EXISTING CABINET FOUNDATION
36. INSTALL CCTV CAMERA ASSEMBLY
37. INSTALL CCTV CAMERA WOOD POLE
38. INSTALL CCTV CAMERA METAL POLE AND FOUNDATION
39. INSTALL SPECIAL OVERSIZED JUNCTION BOX WITH 100 FEET OF COMMUNICATIONS CABLE
40. INSTALL OVERSIZED JUNCTION BOX
41. INSTALL BRIDGE MOUNTED JUNCTION BOX
42. INSTALL WOOD POLE
43. REMOVE EXISTING WOOD POLE
44. INSTALL AERIAL GUY ASSEMBLY
45. INSTALL STANDARD GUY ASSEMBLY
46. INSTALL SIDEWALK GUY ASSEMBLY
47. INSTALL MESSENGER CABLE
48. REMOVE EXISTING COMMUNICATIONS CABLE AND MESSENGER CABLE
49. REMOVE EXISTING COMMUNICATIONS CABLE
50. INSTALL REEL END SPLICE
51. INSTALL CABLE STORAGE RACKS (SNOW SHOES) AND STORE 100 FEET OF CABLE
52. INSTALL DELINEATOR MARKER
53. STORE 50 FEET OF COMMUNICATIONS CABLE
54. LASH CABLE(S) TO EXISTING SIGNAL / COMMUNICATIONS CABLE
55. LASH CABLE(S) TO EXISTING MESSENGER CABLE
56. LASH CABLE(S) TO NEW MESSENGER CABLE
57. MODIFY EXISTING ELECTRICAL SERVICE
58. INSTALL NEW ELECTRICAL SERVICE FOR DMS
59. INSTALL NEW BASE MOUNTED CABINET (336)
60. SEAL ALL CONDUIT ENTERING JUNCTION BOXES AND CABINETS WITH MOLDABLE DUCT SEAL
61. INSTALL ETHERNET SWITCH
62. LOCATE EXISTING JUNCTION BOX AND CONNECT WITH NEW CONDUIT
63. BOND MESSENGER CABLE AND RISER TO POLE GROUND

Prepared for the Offices of:

Transportation Mobility and Safety Division
STATE OF NORTH CAROLINA DEPARTMENT OF TRANSPORTATION
Intermodal Transportation Systems Section

750 N. Greenfield Pkwy., Garner, NC 27529

CABLE ROUTING PLANS

DIV 3 NEW HANOVER CO. Near WILMINGTON

PLAN DATE:	January 2018	REVIEWED BY:	G. Green
PREPARED BY:	L. Neal	REVIEWED BY:	P. Marak

REVISIONS	INIT.	DATE

SCALE: NTS

SEAL: PRELIMINARY PLANS — DO NOT USE FOR CONSTRUCTION

SIGNATURE | DATE

CADD FILE NAME

Revised 3/22/2018

HH17

PROJECT REFERENCE NO.	SHEET NO.
R-2633D	ITS-50

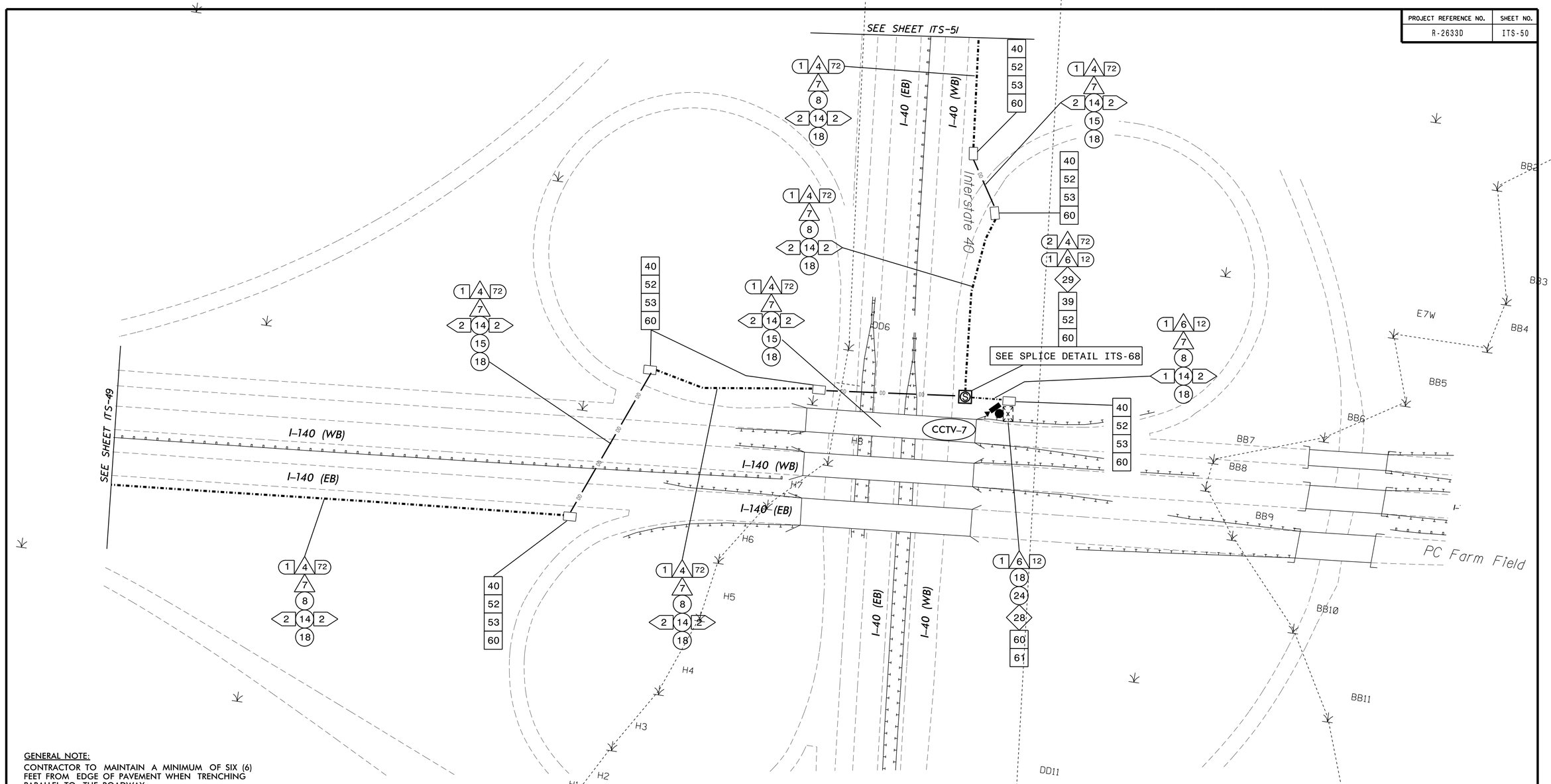

GENERAL NOTE:

CONTRACTOR TO MAINTAIN A MINIMUM OF SIX (6) FEET FROM EDGE OF PAVEMENT WHEN TRENCHING PARALLEL TO THE ROADWAY.

1. INSTALL REA, PE – 22, SHIELDED, TWISTED PAIR COMMUNICATIONS CABLE
2. INSTALL REA, PE – 38, (FIGURE – 8) SHIELDED, TWISTED PAIR COMMUNICATIONS CABLE
3. INSTALL 3-CONDUCTOR, CLASS B, STRANDED UNDERGROUND POWER CABLE
4. INSTALL SMFO CABLE
5. INSTALL CAT 5e COMMUNICATIONS CABLE
6. INSTALL FIBER OPTIC DROP CABLE
7. INSTALL TRACER WIRE
8. TRENCH
9. INSTALL PVC CONDUIT
10. INSTALL RIGID, GALVANIZED STEEL CONDUIT
11. INSTALL RIGID, GALVANIZED STEEL RISER WITH WEATHERHEAD
12. INSTALL RIGID, GALVANIZED STEEL RISER WITH FIBER OPTIC CABLE SEAL
13. INSTALL OUTER-DUCT POLYETHYLENE CONDUIT
14. INSTALL POLYETHYLENE CONDUIT
15. DIRECTIONAL DRILL CONDUIT
16. INSTALL BRIDGE MOUNTED FIBERGLASS CONDUIT, WITH FOUR-WAY INNERDUCT INSERT
17. INSTALL CABLE(S) IN EXISTING CONDUIT
18. INSTALL CABLE(S) IN NEW CONDUIT
19. INSTALL CABLE(S) IN EXISTING RISER
20. INSTALL CABLE(S) IN NEW RISER
21. INSTALL CABLE(S) IN EXISTING CONDUIT STUBOUTS
22. INSTALL NEW CONDUIT INTO EXISTING CABINET BASE (USE EXISTING CONDUIT STUB-OUTS WHEN AVAILABLE)
23. INSTALL NEW RISER INTO EXISTING CABINET BASE (USE EXISTING CONDUIT STUB-OUTS WHEN AVAILABLE)
24. INSTALL NEW CONDUIT INTO EXISTING POLE MOUNTED CABINET
25. INSTALL NEW RISER INTO EXISTING POLE MOUNTED CABINET
26. TERMINATE COMMUNICATIONS CABLE ON EXISTING TELEMETRY INTERFACE PANEL IN TRAFFIC SIGNAL CONTROLLER CABINET
27. INSTALL NEW TELEMETRY INTERFACE PANEL IN TRAFFIC SIGNAL CONTROLLER CABINET
28. INSTALL INTERCONNECT CENTER, PATCH PANEL, JUMPERS, AND FUSION SPLICE CABLE IN CABINET
29. INSTALL UNDERGROUND SPLICE ENCLOSURE
30. INSTALL AERIAL SPLICE ENCLOSURE
31. INSTALL POLE MOUNTED SPLICE CABINET
32. INSTALL BASE MOUNTED SPLICE CABINET (336) WITH EXTEND BASE
33. REMOVE EXISTING SPLICE CABINET
34. INSTALL CABINET FOUNDATION
35. REMOVE EXISTING CABINET FOUNDATION
36. INSTALL CCTV CAMERA ASSEMBLY
37. INSTALL CCTV CAMERA WOOD POLE
38. INSTALL CCTV CAMERA METAL POLE AND FOUNDATION
39. INSTALL SPECIAL OVERSIZED JUNCTION BOX WITH 100 FEET OF COMMUNICATIONS CABLE
40. INSTALL OVERSIZED JUNCTION BOX
41. INSTALL BRIDGE MOUNTED JUNCTION BOX
42. INSTALL WOOD POLE
43. REMOVE EXISTING WOOD POLE
44. INSTALL AERIAL GUY ASSEMBLY
45. INSTALL STANDARD GUY ASSEMBLY
46. INSTALL SIDEWALK GUY ASSEMBLY
47. INSTALL MESSENGER CABLE
48. REMOVE EXISTING COMMUNICATIONS CABLE AND MESSENGER CABLE
49. REMOVE EXISTING COMMUNICATIONS CABLE
50. INSTALL REEL END SPLICE
51. INSTALL CABLE STORAGE RACKS (SNOW SHOES) AND STORE 100 FEET OF CABLE
52. INSTALL DELINEATOR MARKER
53. STORE 50 FEET OF COMMUNICATIONS CABLE
54. LASH CABLE(S) TO EXISTING SIGNAL COMMUNICATIONS CABLE
55. LASH CABLE(S) TO EXISTING MESSENGER CABLE
56. LASH CABLE(S) TO NEW MESSENGER CABLE
57. MODIFY EXISTING ELECTRICAL SERVICE
58. INSTALL NEW ELECTRICAL SERVICE FOR DMS
59. INSTALL NEW BASE MOUNTED CABINET (336)
60. SEAL ALL CONDUIT ENTERING JUNCTION BOXES AND CABINETS WITH MOLDABLE DUCT SEAL
61. INSTALL ETHERNET SWITCH
62. LOCATE EXISTING JUNCTION BOX AND CONNECT WITH NEW CONDUIT
63. BOND MESSENGER CABLE AND RISER TO POLE GROUND

Prepared for the Offices of:

Transportation Mobility and Safety Division
STATE OF NORTH CAROLINA DEPARTMENT OF TRANSPORTATION

1590 N. Greenfield Pkwy., Garner, NC 27529

CABLE ROUTING PLANS

DIV 3 NEW HANOVER CO. Near WILMINGTON

PLAN DATE:	January 2018	REVIEWED BY:	G. Green
PREPARED BY:	L. Neal	REVIEWED BY:	P. Marak

SCALE: NTS

REVISIONS	INIT.	DATE

SEAL

PRELIMINARY PLANS
DO NOT USE FOR CONSTRUCTION

SIGNATURE DATE

CADD FILE NAME

Revised 3/2/2018

PROJECT REFERENCE NO.	SHEET NO.
R-2633D	ITS-51

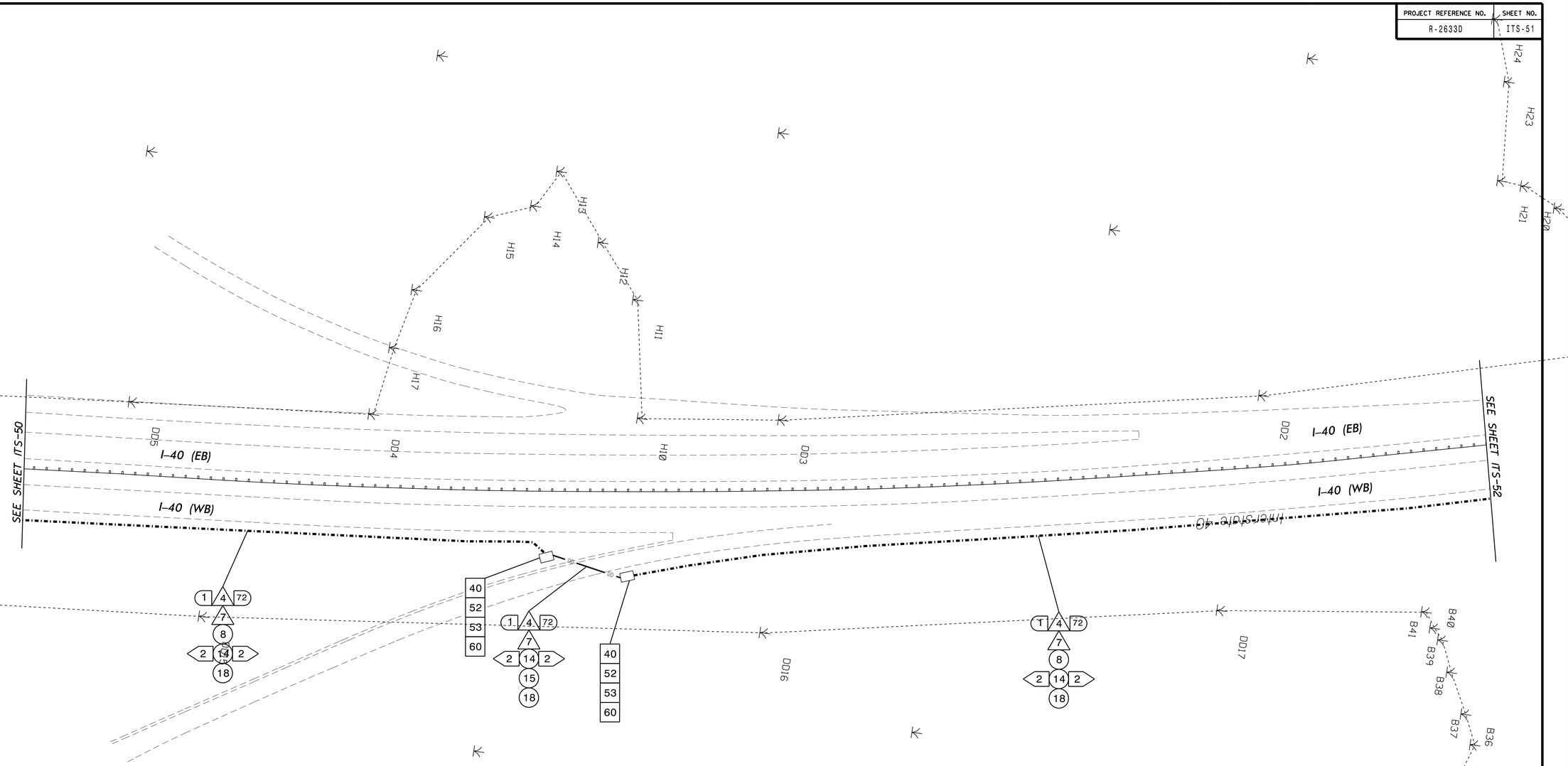

GENERAL NOTE:

CONTRACTOR TO MAINTAIN A MINIMUM OF SIX (6) FEET FROM EDGE OF PAVEMENT WHEN TRENCHING PARALLEL TO THE ROADWAY.

1. INSTALL REA, PE – 22, SHIELDED, TWISTED PAIR COMMUNICATIONS CABLE
2. INSTALL REA, PE – 38, (FIGURE – 8) SHIELDED, TWISTED PAIR COMMUNICATIONS CABLE
3. INSTALL 3–CONDUCTOR, CLASS B, STRANDED UNDERGROUND POWER CABLE
4. INSTALL SMFO CABLE
5. INSTALL CAT 5e COMMUNICATIONS CABLE
6. INSTALL FIBER OPTIC DROP CABLE
7. INSTALL TRACER WIRE
8. TRENCH
9. INSTALL PVC CONDUIT
10. INSTALL RIGID, GALVANIZED STEEL CONDUIT
11. INSTALL RIGID, GALVANIZED STEEL RISER WITH WEATHERHEAD
12. INSTALL RIGID, GALVANIZED STEEL RISER WITH FIBER OPTIC CABLE SEAL
13. INSTALL OUTER–DUCT POLYETHYLENE CONDUIT
14. INSTALL POLYETHYLENE CONDUIT
15. DIRECTIONAL DRILL CONDUIT
16. INSTALL BRIDGE MOUNTED FIBERGLASS CONDUIT, WITH FOUR–WAY INNERDUCT INSERT
17. INSTALL CABLE(S) IN EXISTING CONDUIT
18. INSTALL CABLE(S) IN NEW CONDUIT
19. INSTALL CABLE(S) IN EXISTING RISER
20. INSTALL CABLE(S) IN NEW RISER
21. INSTALL CABLE(S) IN EXISTING CONDUIT STUBOUTS
22. INSTALL NEW CONDUIT INTO EXISTING CABINET BASE (USE EXISTING CONDUIT STUB–OUTS WHEN AVAILABLE)
23. INSTALL NEW RISER INTO EXISTING CABINET BASE (USE EXISTING CONDUIT STUB–OUTS WHEN AVAILABLE)
24. INSTALL NEW CONDUIT INTO EXISTING POLE MOUNTED CABINET
25. INSTALL NEW RISER INTO EXISTING POLE MOUNTED CABINET
26. TERMINATE COMMUNICATIONS CABLE ON EXISTING TELEMETRY INTERFACE PANEL IN TRAFFIC SIGNAL CONTROLLER CABINET
27. INSTALL NEW TELEMETRY INTERFACE PANEL IN TRAFFIC SIGNAL CONTROLLER CABINET
28. INSTALL INTERCONNECT CENTER, PATCH PANEL, JUMPERS, AND FUSION SPLICE CABLE IN CABINET
29. INSTALL UNDERGROUND SPLICE ENCLOSURE
30. INSTALL AERIAL SPLICE ENCLOSURE
31. INSTALL POLE MOUNTED SPLICE CABINET
32. INSTALL BASE MOUNTED SPLICE CABINET (336) WITH EXTEND BASE
33. REMOVE EXISTING SPLICE CABINET
34. INSTALL CABINET FOUNDATION
35. REMOVE EXISTING CABINET FOUNDATION
36. INSTALL CCTV CAMERA ASSEMBLY
37. INSTALL CCTV CAMERA WOOD POLE
38. INSTALL CCTV CAMERA METAL POLE AND FOUNDATION
39. INSTALL SPECIAL OVERSIZED JUNCTION BOX WITH 100 FEET OF COMMUNICATIONS CABLE
40. INSTALL OVERSIZED JUNCTION BOX
41. INSTALL BRIDGE MOUNTED JUNCTION BOX
42. INSTALL WOOD POLE
43. REMOVE EXISTING WOOD POLE
44. INSTALL AERIAL GUY ASSEMBLY
45. INSTALL STANDARD GUY ASSEMBLY
46. INSTALL SIDEWALK GUY ASSEMBLY
47. INSTALL MESSENGER CABLE
48. REMOVE EXISTING COMMUNICATIONS CABLE AND MESSENGER CABLE
49. REMOVE EXISTING COMMUNICATIONS CABLE
50. INSTALL REEL END SPLICE
51. INSTALL CABLE STORAGE RACKS (SNOW SHOES) AND STORE 100 FEET OF CABLE
52. INSTALL DELINEATOR MARKER
53. STORE 50 FEET OF COMMUNICATIONS CABLE
54. LASH CABLE(S) TO EXISTING SIGNAL / COMMUNICATIONS CABLE
55. LASH CABLE(S) TO EXISTING MESSENGER CABLE
56. LASH CABLE(S) TO NEW MESSENGER CABLE
57. MODIFY EXISTING ELECTRICAL SERVICE
58. INSTALL NEW ELECTRICAL SERVICE FOR DMS
59. INSTALL NEW BASE MOUNTED CABINET (336)
60. SEAL ALL CONDUIT ENTERING JUNCTION BOXES AND CABINETS WITH MOLDABLE DUCT SEAL
61. INSTALL ETHERNET SWITCH
62. LOCATE EXISTING JUNCTION BOX AND CONNECT WITH NEW CONDUIT
63. BOND MESSENGER CABLE AND RISER TO POLE GROUND

Prepared for the Offices of:

STATE OF NORTH CAROLINA DEPARTMENT OF TRANSPORTATION

Transportation Mobility and Safety Division
Intermodal Transportation Systems

750 N. Greenfield Pkwy., Garner, NC 27529

SCALE: NTS

I–40 ITS FIBER CABLE ROUTE
CABLE ROUTING PLANS

DIV 3 NEW HANOVER CO. Near WILMINGTON

PLAN DATE:	January 2018	REVIEWED BY:	G. Green
PREPARED BY:	L. Neal	REVIEWED BY:	P. Marak

REVISIONS	INIT.	DATE

SEAL: PRELIMINARY PLANS — DO NOT USE FOR CONSTRUCTION

SIGNATURE | DATE

CADD FILE NAME

Revised 3/2/2018

PROJECT REFERENCE NO.	SHEET NO.
R-2633D	ITS-52

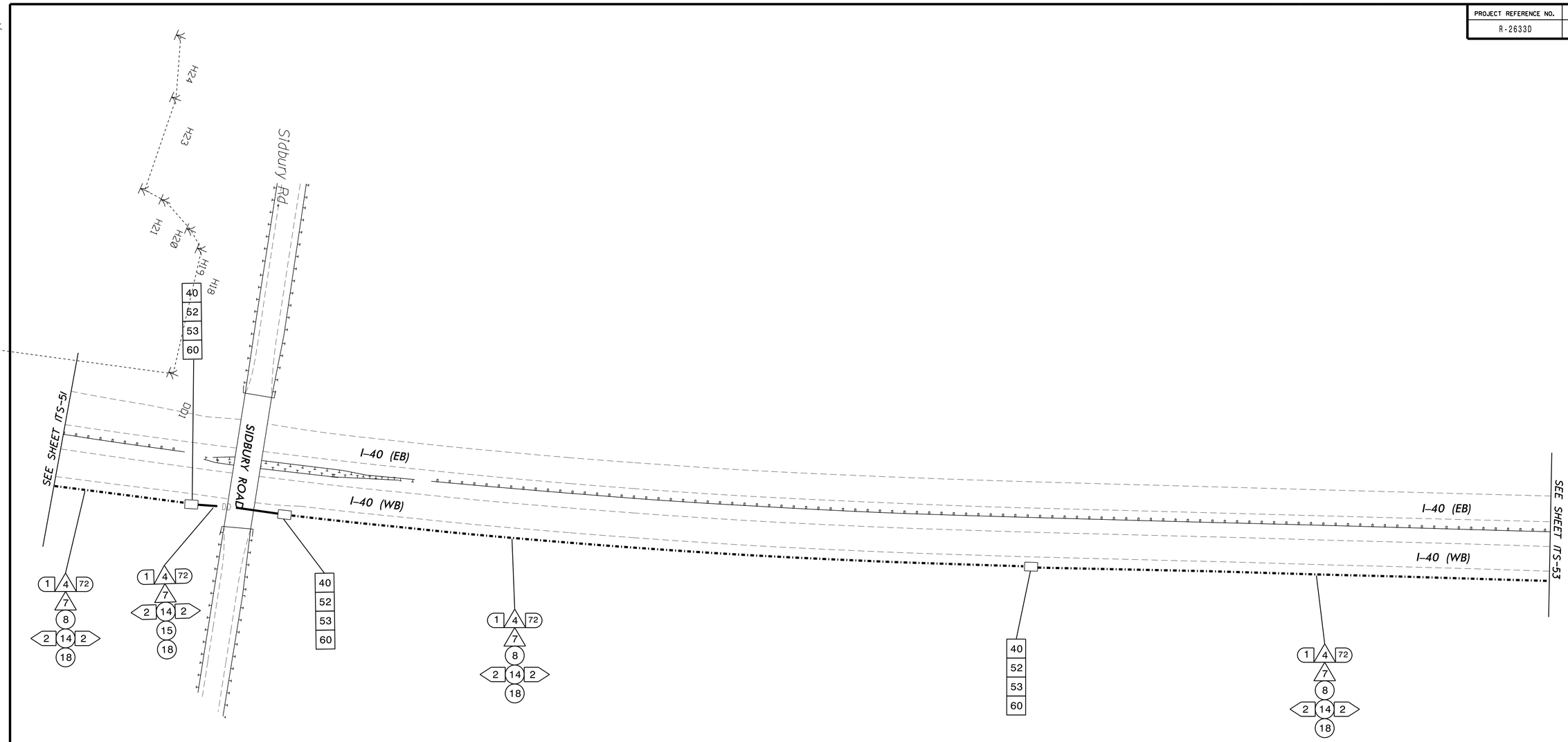

GENERAL NOTE:
CONTRACTOR TO MAINTAIN A MINIMUM OF SIX (6) FEET FROM EDGE OF PAVEMENT WHEN TRENCHING PARALLEL TO THE ROADWAY.

1. INSTALL 26A, PE – 22, SHIELDED, TWISTED PAIR COMMUNICATIONS CABLE
2. INSTALL 26A, PE – 38, (FIGURE – 8) SHIELDED, TWISTED PAIR COMMUNICATIONS CABLE
3. INSTALL 3-CONDUCTOR, CLASS B, STRANDED UNDERGROUND POWER CABLE
4. INSTALL SMFO CABLE
5. INSTALL CAT 5e COMMUNICATIONS CABLE
6. INSTALL FIBER OPTIC DROP CABLE
7. INSTALL TRACER WIRE
8. TRENCH
9. INSTALL PVC CONDUIT
10. INSTALL RIGID, GALVANIZED STEEL CONDUIT
11. INSTALL RIGID, GALVANIZED STEEL RISER WITH WEATHERHEAD
12. INSTALL RIGID, GALVANIZED STEEL RISER WITH FIBER OPTIC CABLE SEAL
13. INSTALL OUTER-DUCT POLYETHYLENE CONDUIT
14. INSTALL POLYETHYLENE CONDUIT
15. DIRECTIONAL DRILL CONDUIT
16. INSTALL BRIDGE MOUNTED FIBERGLASS CONDUIT, WITH FOUR-WAY INNERDUCT INSERT
17. INSTALL CABLE(S) IN EXISTING CONDUIT
18. INSTALL CABLE(S) IN NEW CONDUIT
19. INSTALL CABLE(S) IN EXISTING RISER
20. INSTALL CABLE(S) IN NEW RISER
21. INSTALL CABLE(S) IN EXISTING CONDUIT STUBOUTS
22. INSTALL NEW CONDUIT INTO EXISTING CABINET BASE (USE EXISTING CONDUIT STUB-OUTS WHEN AVAILABLE)
23. INSTALL NEW RISER INTO EXISTING CABINET BASE (USE EXISTING CONDUIT STUB-OUTS WHEN AVAILABLE)
24. INSTALL NEW CONDUIT INTO EXISTING POLE MOUNTED CABINET
25. INSTALL NEW RISER INTO EXISTING POLE MOUNTED CABINET
26. TERMINATE COMMUNICATIONS CABLE ON EXISTING TELEMETRY INTERFACE PANEL IN TRAFFIC SIGNAL CONTROLLER CABINET
27. INSTALL NEW TELEMETRY INTERFACE PANEL IN TRAFFIC SIGNAL CONTROLLER CABINET
28. INSTALL INTERCONNECT CENTER, PATCH PANEL, JUMPERS, AND FUSION SPLICE CABLE IN CABINET
29. INSTALL UNDERGROUND SPLICE ENCLOSURE
30. INSTALL AERIAL SPLICE ENCLOSURE
31. INSTALL POLE MOUNTED SPLICE CABINET
32. INSTALL BASE MOUNTED SPLICE CABINET (336) WITH EXTEND BASE
33. REMOVE EXISTING SPLICE CABINET
34. INSTALL CABINET FOUNDATION
35. REMOVE EXISTING CABINET FOUNDATION
36. INSTALL CCTV CAMERA ASSEMBLY
37. INSTALL CCTV CAMERA WOOD POLE
38. INSTALL CCTV CAMERA METAL POLE AND FOUNDATION
39. INSTALL SPECIAL OVERSIZED JUNCTION BOX WITH 100 FEET OF COMMUNICATIONS CABLE
40. INSTALL OVERSIZED JUNCTION BOX
41. INSTALL BRIDGE MOUNTED JUNCTION BOX
42. INSTALL WOOD POLE
43. REMOVE EXISTING WOOD POLE
44. INSTALL AERIAL GUY ASSEMBLY
45. INSTALL STANDARD GUY ASSEMBLY
46. INSTALL SIDEWALK GUY ASSEMBLY
47. INSTALL MESSENGER CABLE
48. REMOVE EXISTING COMMUNICATIONS CABLE AND MESSENGER CABLE
49. REMOVE EXISTING COMMUNICATIONS CABLE
50. INSTALL REEL END SPLICE
51. INSTALL CABLE STORAGE RACKS (SNOW SHOES) AND STORE 100 FEET OF CABLE
52. INSTALL DELINEATOR MARKER
53. STORE 50 FEET OF COMMUNICATIONS CABLE
54. LASH CABLE(S) TO EXISTING SIGNAL / COMMUNICATIONS CABLE
55. LASH CABLE(S) TO EXISTING MESSENGER CABLE
56. LASH CABLE(S) TO NEW MESSENGER CABLE
57. MODIFY EXISTING ELECTRICAL SERVICE
58. INSTALL NEW ELECTRICAL SERVICE FOR DMS
59. INSTALL NEW BASE MOUNTED CABINET (336)
60. SEAL ALL CONDUIT ENTERING JUNCTION BOXES AND CABINETS WITH MOLDABLE DUCT SEAL
61. INSTALL ETHERNET SWITCH
62. LOCATE EXISTING JUNCTION BOX AND CONNECT WITH NEW CONDUIT
63. BOND MESSENGER CABLE AND RISER TO POLE GROUND

Prepared for the Offices of:
Transportation Mobility and Safety Division
STATE OF NORTH CAROLINA DEPARTMENT OF TRANSPORTATION
Intermodal Transportation Planning & Design Section
750 N. Greenfield Pkwy., Garner, NC 27529

CABLE ROUTING PLANS

DIV 3 NEW HANOVER CO. Near WILMINGTON

PLAN DATE:	January 2018	REVIEWED BY:	G. Green
PREPARED BY:	L. Neal	REVIEWED BY:	P. Marak

SCALE: NTS

REVISIONS	INIT.	DATE

SEAL
PRELIMINARY PLANS
DO NOT USE FOR CONSTRUCTION
SIGNATURE DATE
CADD FILE NAME

Revised 3/2/2018

Revised 3/2/2018

PROJECT REFERENCE NO.	SHEET NO.
R-2633D	ITS-53

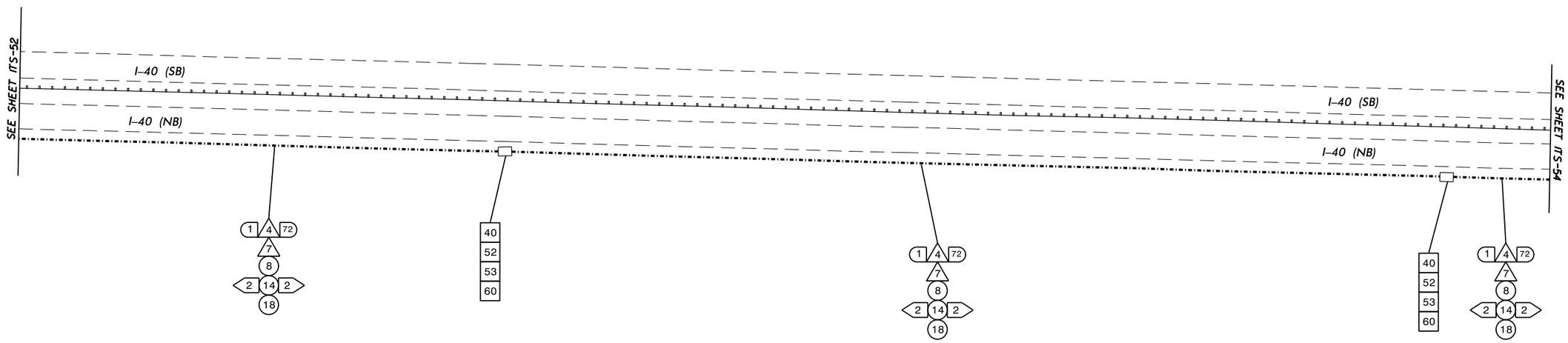

GENERAL NOTE:
CONTRACTOR TO MAINTAIN A MINIMUM OF SIX (6) FEET FROM EDGE OF PAVEMENT WHEN TRENCHING PARALLEL TO THE ROADWAY.

1. INSTALL REA, PE – 22, SHIELDED, TWISTED PAIR COMMUNICATIONS CABLE
2. INSTALL REA, PE – 38, (FIGURE – 8) SHIELDED, TWISTED PAIR COMMUNICATIONS CABLE
3. INSTALL 3-CONDUCTOR, CLASS B, STRANDED UNDERGROUND POWER CABLE
4. INSTALL SMFO CABLE
5. INSTALL CAT 5e COMMUNICATIONS CABLE
6. INSTALL FIBER OPTIC DROP CABLE
7. INSTALL TRACER WIRE
8. TRENCH
9. INSTALL PVC CONDUIT
10. INSTALL RIGID, GALVANIZED STEEL CONDUIT
11. INSTALL RIGID, GALVANIZED STEEL RISER WITH WEATHERHEAD
12. INSTALL RIGID, GALVANIZED STEEL RISER WITH FIBER OPTIC CABLE SEAL
13. INSTALL OUTER-DUCT POLYETHYLENE CONDUIT
14. INSTALL POLYETHYLENE CONDUIT
15. DIRECTIONAL DRILL CONDUIT
16. INSTALL BRIDGE MOUNTED FIBERGLASS CONDUIT, WITH FOUR-WAY INNERDUCT INSERT
17. INSTALL CABLE(S) IN EXISTING CONDUIT
18. INSTALL CABLE(S) IN NEW CONDUIT
19. INSTALL CABLE(S) IN EXISTING RISER
20. INSTALL CABLE(S) IN NEW RISER
21. INSTALL CABLE(S) IN EXISTING CONDUIT STUBOUTS
22. INSTALL NEW CONDUIT INTO EXISTING CABINET BASE (USE EXISTING CONDUIT STUB-OUTS WHEN AVAILABLE)
23. INSTALL NEW RISER INTO EXISTING CABINET BASE (USE EXISTING CONDUIT STUB-OUTS WHEN AVAILABLE)
24. INSTALL NEW CONDUIT INTO EXISTING POLE MOUNTED CABINET
25. INSTALL NEW RISER INTO EXISTING POLE MOUNTED CABINET
26. TERMINATE COMMUNICATIONS CABLE ON EXISTING TELEMETRY INTERFACE PANEL IN TRAFFIC SIGNAL CONTROLLER CABINET
27. INSTALL NEW TELEMETRY INTERFACE PANEL IN TRAFFIC SIGNAL CONTROLLER CABINET
28. INSTALL INTERCONNECT CENTER, PATCH PANEL, JUMPERS, AND FUSION SPLICE CABLE IN CABINET
29. INSTALL UNDERGROUND SPLICE ENCLOSURE
30. INSTALL AERIAL SPLICE ENCLOSURE
31. INSTALL POLE MOUNTED SPLICE CABINET
32. INSTALL BASE MOUNTED SPLICE CABINET (336) WITH EXTEND BASE
33. REMOVE EXISTING SPLICE CABINET
34. INSTALL CABINET FOUNDATION
35. REMOVE EXISTING CABINET FOUNDATION
36. INSTALL CCTV CAMERA ASSEMBLY
37. INSTALL CCTV CAMERA WOOD POLE
38. INSTALL CCTV CAMERA METAL POLE AND FOUNDATION
39. INSTALL SPECIAL OVERSIZED JUNCTION BOX WITH 100 FEET OF COMMUNICATIONS CABLE
40. INSTALL OVERSIZED JUNCTION BOX
41. INSTALL BRIDGE MOUNTED JUNCTION BOX
42. INSTALL WOOD POLE
43. REMOVE EXISTING WOOD POLE
44. INSTALL AERIAL GUY ASSEMBLY
45. INSTALL STANDARD GUY ASSEMBLY
46. INSTALL SIDEWALK GUY ASSEMBLY
47. INSTALL MESSENGER CABLE
48. REMOVE EXISTING COMMUNICATIONS CABLE AND MESSENGER CABLE
49. REMOVE EXISTING COMMUNICATIONS CABLE
50. INSTALL REEL END SPLICE
51. INSTALL CABLE STORAGE RACKS (SNOW SHOES) AND STORE 100 FEET OF CABLE
52. INSTALL DELINEATOR MARKER
53. STORE 50 FEET OF COMMUNICATIONS CABLE
54. LASH CABLE(S) TO EXISTING SIGNAL / COMMUNICATIONS CABLE
55. LASH CABLE(S) TO EXISTING MESSENGER CABLE
56. LASH CABLE(S) TO NEW MESSENGER CABLE
57. MODIFY EXISTING ELECTRICAL SERVICE
58. INSTALL NEW ELECTRICAL SERVICE FOR DMS
59. INSTALL NEW BASE MOUNTED CABINET (336)
60. SEAL ALL CONDUIT ENTERING JUNCTION BOXES AND CABINETS WITH MOLDABLE DUCT SEAL
61. INSTALL ETHERNET SWITCH
62. LOCATE EXISTING JUNCTION BOX AND CONNECT WITH NEW CONDUIT
63. BOND MESSENGER CABLE AND RISER TO POLE GROUND

Prepared for the Offices of:
Transportation Mobility and Safety Division
Intelligent Transportation Systems
STATE OF NORTH CAROLINA DEPARTMENT OF TRANSPORTATION
750 N. Greenfield Pkwy., Garner, NC 27529

CABLE ROUTING PLANS

DIV 3 NEW HANOVER CO. Near WILMINGTON

PLAN DATE:	January 2018	REVIEWED BY:	G. Green
PREPARED BY:	L. Neal	REVIEWED BY:	P. Marak

SCALE: NTS

REVISIONS	INIT.	DATE

SEAL
NORTH CAROLINA PROFESSIONAL SEAL 031636 ENGINEER PAUL P MARAK

SIGNATURE DATE
CADD FILE NAME

Revised 3/2/2018

PROJECT REFERENCE NO.	SHEET NO.
R-2633D	ITS-54

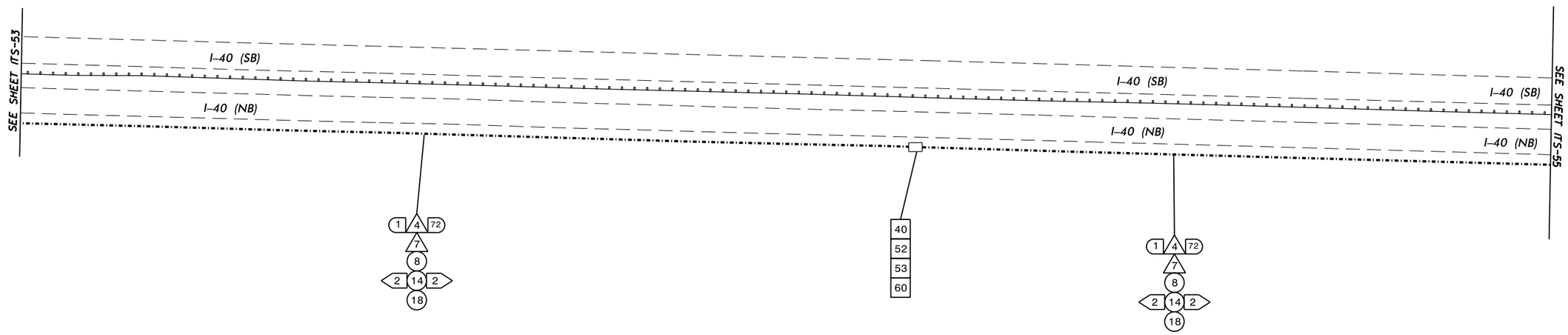

GENERAL NOTE:

CONTRACTOR TO MAINTAIN A MINIMUM OF SIX (6) FEET FROM EDGE OF PAVEMENT WHEN TRENCHING PARALLEL TO THE ROADWAY.

1. INSTALL REA, PE – 22, SHIELDED, TWISTED PAIR COMMUNICATIONS CABLE
2. INSTALL REA, PE – 38, (FIGURE – 8) SHIELDED, TWISTED PAIR COMMUNICATIONS CABLE
3. INSTALL 3-CONDUCTOR, CLASS B, STRANDED UNDERGROUND POWER CABLE
4. INSTALL SMFO CABLE
5. INSTALL CAT 5e COMMUNICATIONS CABLE
6. INSTALL FIBER OPTIC DROP CABLE
7. INSTALL TRACER WIRE
8. TRENCH
9. INSTALL PVC CONDUIT
10. INSTALL RIGID, GALVANIZED STEEL CONDUIT
11. INSTALL RIGID, GALVANIZED STEEL RISER WITH WEATHERHEAD
12. INSTALL RIGID, GALVANIZED STEEL RISER WITH FIBER OPTIC CABLE SEAL
13. INSTALL OUTER-DUCT POLYETHYLENE CONDUIT
14. INSTALL POLYETHYLENE CONDUIT
15. DIRECTIONAL DRILL CONDUIT
16. INSTALL BRIDGE MOUNTED FIBERGLASS CONDUIT, WITH FOUR-WAY INNERDUCT INSERT
17. INSTALL CABLE(S) IN EXISTING CONDUIT
18. INSTALL CABLE(S) IN NEW CONDUIT
19. INSTALL CABLE(S) IN EXISTING RISER
20. INSTALL CABLE(S) IN NEW RISER
21. INSTALL CABLE(S) IN EXISTING CONDUIT STUBOUTS
22. INSTALL NEW CONDUIT INTO EXISTING CABINET BASE (USE EXISTING CONDUIT STUB-OUTS WHEN AVAILABLE)
23. INSTALL NEW RISER INTO EXISTING CABINET BASE (USE EXISTING CONDUIT STUB-OUTS WHEN AVAILABLE)
24. INSTALL NEW CONDUIT INTO EXISTING POLE MOUNTED CABINET
25. INSTALL NEW RISER INTO EXISTING POLE MOUNTED CABINET
26. TERMINATE COMMUNICATIONS CABLE ON EXISTING TELEMETRY INTERFACE PANEL IN TRAFFIC SIGNAL CONTROLLER CABINET
27. INSTALL NEW TELEMETRY INTERFACE PANEL IN TRAFFIC SIGNAL CONTROLLER CABINET
28. INSTALL INTERCONNECT CENTER, PATCH PANEL, JUMPERS, AND FUSION SPLICE CABLE IN CABINET
29. INSTALL UNDERGROUND SPLICE ENCLOSURE
30. INSTALL AERIAL SPLICE ENCLOSURE
31. INSTALL POLE MOUNTED SPLICE CABINET
32. INSTALL BASE MOUNTED SPLICE CABINET (336) WITH EXTEND BASE
33. REMOVE EXISTING SPLICE CABINET
34. INSTALL CABINET FOUNDATION
35. REMOVE EXISTING CABINET FOUNDATION
36. INSTALL CCTV CAMERA ASSEMBLY
37. INSTALL CCTV CAMERA WOOD POLE
38. INSTALL CCTV CAMERA METAL POLE AND FOUNDATION
39. INSTALL SPECIAL OVERSIZED JUNCTION BOX WITH 100 FEET OF COMMUNICATIONS CABLE
40. INSTALL OVERSIZED JUNCTION BOX
41. INSTALL BRIDGE MOUNTED JUNCTION BOX
42. INSTALL WOOD POLE
43. REMOVE EXISTING WOOD POLE
44. INSTALL AERIAL GUY ASSEMBLY
45. INSTALL STANDARD GUY ASSEMBLY
46. INSTALL SIDEWALK GUY ASSEMBLY
47. INSTALL MESSENGER CABLE
48. REMOVE EXISTING COMMUNICATIONS CABLE AND MESSENGER CABLE
49. REMOVE EXISTING COMMUNICATIONS CABLE
50. INSTALL REEL END SPLICE
51. INSTALL CABLE STORAGE RACKS (SNOW SHOES) AND STORE 100 FEET OF CABLE
52. INSTALL DELINEATOR MARKER
53. STORE 50 FEET OF COMMUNICATIONS CABLE
54. LASH CABLE(S) TO EXISTING SIGNAL / COMMUNICATIONS CABLE
55. LASH CABLE(S) TO EXISTING MESSENGER CABLE
56. LASH CABLE(S) TO NEW MESSENGER CABLE
57. MODIFY EXISTING ELECTRICAL SERVICE
58. INSTALL NEW ELECTRICAL SERVICE FOR DMS
59. INSTALL NEW BASE MOUNTED CABINET (336)
60. SEAL ALL CONDUIT ENTERING JUNCTION BOXES AND CABINETS WITH MOLDABLE DUCT SEAL
61. INSTALL ETHERNET SWITCH
62. LOCATE EXISTING JUNCTION BOX AND CONNECT WITH NEW CONDUIT
63. BOND MESSENGER CABLE AND RISER TO POLE GROUND

Prepared for the Offices of:

Transportation Mobility and Safety Division
STATE OF NORTH CAROLINA DEPARTMENT OF TRANSPORTATION
Integrated Transportation Systems

750 N. Greenfield Pkwy., Garner, NC 27529

SCALE: NTS

CABLE ROUTING PLANS

DIV 3 NEW HANOVER CO. Near WILMINGTON

PLAN DATE:	January 2018	REVIEWED BY:	G. Green
PREPARED BY:	L. Neal	REVIEWED BY:	P. Marak

REVISIONS	INIT.	DATE

SEAL

NORTH CAROLINA PROFESSIONAL SEAL 031636 ENGINEER PAUL P MARAK

SIGNATURE DATE

CADD FILE NAME

Revised 3/2/2018

PROJECT REFERENCE NO.	SHEET NO.
R-2633D	ITS-55

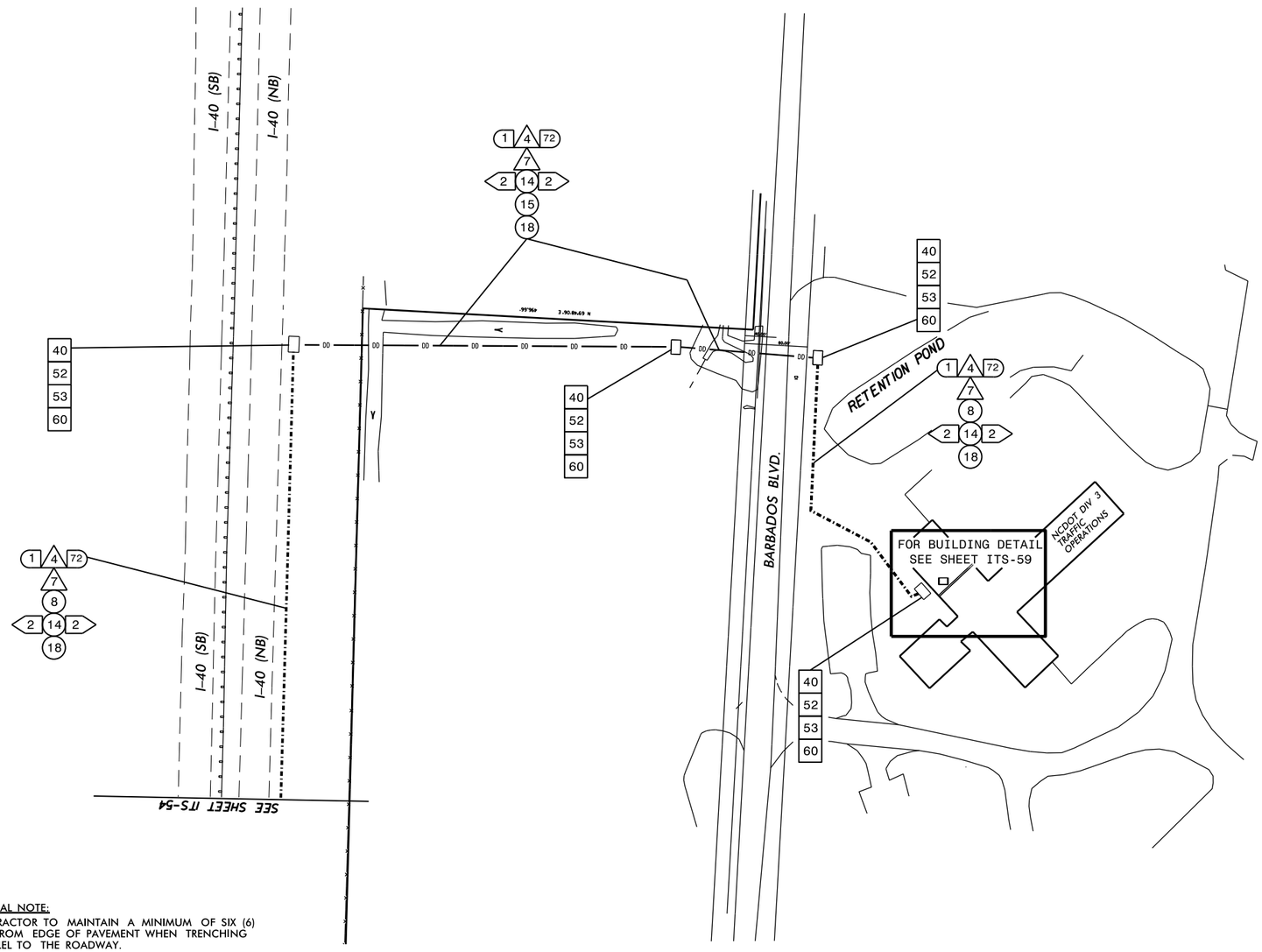

GENERAL NOTE:
CONTRACTOR TO MAINTAIN A MINIMUM OF SIX (6) FEET FROM EDGE OF PAVEMENT WHEN TRENCHING PARALLEL TO THE ROADWAY.

1. INSTALL REA, PE – 22, SHIELDED, TWISTED PAIR COMMUNICATIONS CABLE
2. INSTALL REA, PE – 38, (FIGURE – 8) SHIELDED, TWISTED PAIR COMMUNICATIONS CABLE
3. INSTALL 3-CONDUCTOR, CLASS B, STRANDED UNDERGROUND POWER CABLE
4. INSTALL SMFO CABLE
5. INSTALL CAT 5e COMMUNICATIONS CABLE
6. INSTALL FIBER OPTIC DROP CABLE
7. INSTALL TRACER WIRE
8. TRENCH
9. INSTALL PVC CONDUIT
10. INSTALL RIGID, GALVANIZED STEEL CONDUIT
11. INSTALL RIGID, GALVANIZED STEEL RISER WITH WEATHERHEAD
12. INSTALL RIGID, GALVANIZED STEEL RISER WITH FIBER OPTIC CABLE SEAL
13. INSTALL OUTER-DUCT POLYETHYLENE CONDUIT
14. INSTALL POLYETHYLENE CONDUIT
15. DIRECTIONAL DRILL CONDUIT
16. INSTALL BRIDGE MOUNTED FIBERGLASS CONDUIT, WITH FOUR-WAY INNERDUCT INSERT
17. INSTALL CABLE(S) IN EXISTING CONDUIT
18. INSTALL CABLE(S) IN NEW CONDUIT
19. INSTALL CABLE(S) IN EXISTING RISER
20. INSTALL CABLE(S) IN NEW RISER
21. INSTALL CABLE(S) IN EXISTING CONDUIT STUBOUTS
22. INSTALL NEW CONDUIT INTO EXISTING CABINET BASE (USE EXISTING CONDUIT STUB-OUTS WHEN AVAILABLE)
23. INSTALL NEW RISER INTO EXISTING CABINET BASE (USE EXISTING CONDUIT STUB-OUTS WHEN AVAILABLE)
24. INSTALL NEW CONDUIT INTO EXISTING POLE MOUNTED CABINET
25. INSTALL NEW RISER INTO EXISTING POLE MOUNTED CABINET
26. TERMINATE COMMUNICATIONS CABLE ON EXISTING TELEMETRY INTERFACE PANEL IN TRAFFIC SIGNAL CONTROLLER CABINET
27. INSTALL NEW TELEMETRY INTERFACE PANEL IN TRAFFIC SIGNAL CONTROLLER CABINET
28. INSTALL INTERCONNECT CENTER, PATCH PANEL, JUMPERS, AND FUSION SPLICE CABLE IN CABINET
29. INSTALL UNDERGROUND SPLICE ENCLOSURE
30. INSTALL AERIAL SPLICE ENCLOSURE
31. INSTALL POLE MOUNTED SPLICE CABINET
32. INSTALL BASE MOUNTED SPLICE CABINET (336) WITH EXTEND BASE
33. REMOVE EXISTING SPLICE CABINET
34. INSTALL CABINET FOUNDATION
35. REMOVE EXISTING CABINET FOUNDATION
36. INSTALL CCTV CAMERA ASSEMBLY
37. INSTALL CCTV CAMERA WOOD POLE
38. INSTALL CCTV CAMERA METAL POLE AND FOUNDATION
39. INSTALL SPECIAL OVERSIZED JUNCTION BOX WITH 100 FEET OF COMMUNICATIONS CABLE
40. INSTALL OVERSIZED JUNCTION BOX
41. INSTALL BRIDGE MOUNTED JUNCTION BOX
42. INSTALL WOOD POLE
43. REMOVE EXISTING WOOD POLE
44. INSTALL AERIAL GUY ASSEMBLY
45. INSTALL STANDARD GUY ASSEMBLY
46. INSTALL SIDEWALK GUY ASSEMBLY
47. INSTALL MESSENGER CABLE
48. REMOVE EXISTING COMMUNICATIONS CABLE AND MESSENGER CABLE
49. REMOVE EXISTING COMMUNICATIONS CABLE
50. INSTALL REEL END SPLICE
51. INSTALL CABLE STORAGE RACKS (SNOW SHOES) AND STORE 100 FEET OF CABLE
52. INSTALL DELINEATOR MARKER
53. STORE 50 FEET OF COMMUNICATIONS CABLE
54. LASH CABLE(S) TO EXISTING SIGNAL / COMMUNICATIONS CABLE
55. LASH CABLE(S) TO EXISTING MESSENGER CABLE
56. LASH CABLE(S) TO NEW MESSENGER CABLE
57. MODIFY EXISTING ELECTRICAL SERVICE
58. INSTALL NEW ELECTRICAL SERVICE FOR DMS
59. INSTALL NEW BASE MOUNTED CABINET (336)
60. SEAL ALL CONDUIT ENTERING JUNCTION BOXES AND CABINETS WITH MOLDABLE DUCT SEAL
61. INSTALL ETHERNET SWITCH
62. LOCATE EXISTING JUNCTION BOX AND CONNECT WITH NEW CONDUIT
63. BOND MESSENGER CABLE AND RISER TO POLE GROUND

Prepared for the Offices of:
Transportation Mobility and Safety Division
Intelligent Transportation Systems
STATE OF NORTH CAROLINA DEPARTMENT OF TRANSPORTATION
750 N. Greenfield Pkwy., Garner, NC 27529

SCALE: NTS

CABLE ROUTING PLANS

DIV 3 NEW HANOVER CO. Near WILMINGTON

PLAN DATE:	January 2018	REVIEWED BY:	G. Green
PREPARED BY:	L. Neal	REVIEWED BY:	P. Marak

REVISIONS	INIT.	DATE

SEAL
NORTH CAROLINA PROFESSIONAL SEAL 031636 ENGINEER PAUL P. MARAK

SIGNATURE DATE
CADD FILE NAME

Revised 3/2/2018

R-2633 Breaks	Page #	JB's	Area (ft^2)	Subtotals	Total (ft^2)
A	4	2	18	459	1278
	5	7	63		
	6	4	36		
	7	2	18		
	8	3	27		
	9	2	18		
	10	3	27		
	11	2	18		
	12	2	18		
	13	3	27		
	14	2	18		
	15	2	18		
	16	8	72		
	56	3	27		
	57	3	27		
	58	3	27		
B	17	3	27	351	
	18	2	18		
	19	2	18		
	20	2	18		
	21	2	18		
	22	6	54		
	23	2	18		
	24	2	18		
	25	2	18		
	26	4	36		
	27	5	45		
	28	2	18		
	29	0	0		
	30	0	0		
	31	1	9		
	32	1	9		
	33	0	0		
	34	3	27		
C	35	0	0	468	
	36	0	0		
	37	2	18		
	38	3	27		
	39	2	18		
	40	2	18		
	41	2	18		
	42	1	9		
	43	7	63		
	44	2	18		
	45	3	27		
	46	2	18		
	47	2	18		
	48	1	9		
	49	4	36		
	50	7	63		
	51	2	18		
	52	3	27		
	53	2	18		
	54	1	9		
	55	4	36		