LEGEND

- ROAD
- 4 LANE UNDIVIDED HIGHWAY
- DIVIDED HIGHWAY
- FULL CONTROL ACCESS
- DETAILED HIGHWAY INTERCHANGE
- ROAD THROUGH MOUNTAIN PASS
- HIGHWAY BRIDGE
- UNDERPASS
- OVERPASS
- DRAW SPAN ON BRIDGE
- HIGHWAY TUNNEL
- FORD
- INTERSTATE HIGHWAY
- U.S. NUMBERED HIGHWAY
- N.C. NUMBERED HIGHWAY
- U.S. NUMBERED BICYCLE ROUTE
- N.C. NUMBERED BICYCLE ROUTE
- INTERSTATE INTERCHANGE NUMBER
- SECONDARY ROAD NUMBER
- RAILROAD, ANY NUMBER OF TRACKS USED BY SINGLE OPERATING COMPANY
- RAILROAD,ANY NUMBER OF TRACKS USED BY MORE THAN ONE OPERATION COMPANY ON SAME OR ADJACENT RIGHTS-OF-WAY
- RAILROAD STATION
- GRADE CROSSING
- UNDERPASS
- OVERPASS
- RAILROAD TUNNEL
- RAILROAD BRIDGE
- UNINCORPORATED CENSUS DESIGNATED PLACE
- CITY LIMIT
- COUNTY LINE
- STATE LINE
- INCORPORATED CITY OR VILLAGE, (GENERALIZED)
- CABLE
- RESERVATION OR PARK BOUNDARY
- INSET AREA
- FREE OR TOLL FERRY
- CANAL
- NARROW STREAM
- WIDE STREAM
- DAM WITH LOCK
- DAM
- RESERVOIR, POND, OR LAKE
- COUNTY SEAT
- COMMUNITY AND TOWN CENTER
- TOWN HALL
- SCHOOL
- COLLEGE OR UNIVERSITY
- HOSPITAL
- CHURCH
- CHURCH WITH CEMETERY
- CEMETERY
- FAIRGROUND OR RACETRACK
- POST OFFICE
- POWER PLANT
- POWER SUBSTATION
- PATROL STATION
- CORRECTIONAL OR PENAL INSTN.
- HIGHWAY GARAGE OR MAINT. YARD
- HIGHWAY DIV. OR DIST. OFFICE
- WEIGHT STATION
- SWAMP OR MARSH
- GRAVEL PIT OR QUARRY
- MONUMENT-SMALL HISTORICAL SITE
- LIGHTHOUSE
- MOUNTAIN PEAK
- MINE
- REST AREA
- MUNICIPAL PARK
- TRIANGULATION STATION
- COAST GUARD STATION
- ARMORY
- FEDERAL GAME LAND
- MILITARY AIRFIELD
- COMMERCIAL OR MUNICIPAL FIELD
- HANGAR ON FIELD
- LANDING STRIP
- MARKED AUXILIARY FIELD
- WAREHOUSES OR MANUFACTURING PLANTS
- SHOPPING CENTERS

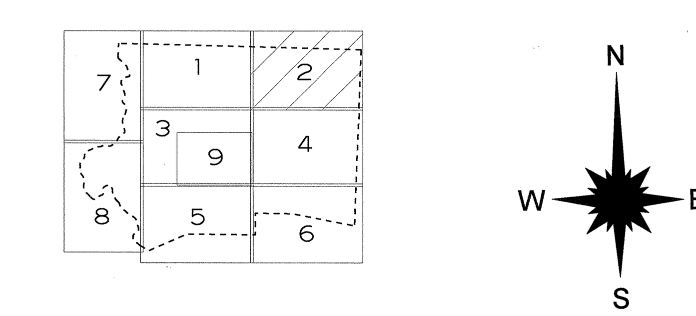

SHEET KEY

2011 ANNUAL AVERAGE DAILY TRAFFIC

GENERATED BY THE

TRAFFIC SURVEY GROUP

TRANSPORTATION PLANNING BRANCH

WINSTON–SALEM

INCLUDED IN

FORSYTH COUNTY

NORTH CAROLINA

BASE MAPPING PREPARED BY

NORTH CAROLINA DEPARTMENT OF TRANSPORTATION
STATE ROAD MAINTENANCE UNIT
MAPPING & INFORMATION SECTION

IN COOPERATION WITH THE

U.S.DEPARTMENT OF TRANSPORTATION
FEDERAL HIGHWAY ADMINISTRATION

SCALE 0 — 1 MILES

SCALE 0 — 1 KILOMETER

SHEET 2 OF 9

BASE MAP REVISED AUG 2009

SHEET 2 OF 9

1″=1500′=457.2m