STATE OF
NORTH CAROLINA
DEPT. OF TRANSPORTATION
DIVISION OF HIGHWAYS
RALEIGH, N.C.

ENGLISH STANDARD DRAWING FOR

DEEP-CUT INDUCTIVE DETECTION LOOPS

(FOR INSTALLATION PRIOR TO MILLING)

SHEET 1 OF 1

NOTES

- OVERLAP SAW CUTS AT CORNERS AND INTERSECTION POINTS TO ENSURE UNIFORM SAW SLOT DEPTH.
- MAINTAIN 12″ SPACING BETWEEN LOOP WIRE TAIL SECTIONS.
- WIRE LOOPS CONNECTED TO THE SAME DETECTOR IN SERIES.
- LOCATE LOOPS IN CENTER OF LANES UNLESS OTHERWISE SHOWN ON PLANS.
- USE A SERIES OF ONE INCH PIECES OF BACKER ROD SPACED ONE FOOT APART ALONG THE ENTIRE LENGTH OF THE FEEDER SLOT AND LOOP SAW SLOT.
- CONSULT LOOP SEALANT MANUFACTURER TO DETERMINE CURING TIME REQUIRED PRIOR TO MILLING.
- REFER TO STANDARD DRAWING 1725.01 SHEETS 2 AND 3 FOR ADDITIONAL REQUIREMENTS.

SAW SLOT DEPTH CHART

ASSUMING 2″ MILLING DEPTH

DEPTH (IN)	MAX NO. OF WIRE LAYERS				
	2	3	4	5	6
SAW SLOT DEPTH	4.0	4.5	5.0	5.0	5.0
MINIMUM TOTAL ASPHALT DEPTH REQUIRED	5.0	5.5	6.0	6.0	6.0

LOOP WIRE TWISTING METHOD

INCORRECT WAY TO TWIST WIRE

CORRECT WAY TO TWIST WIRE

CONVENTIONAL 4-SIDED LOOP

SAW CUT OPTIONS

OPTION 1

INSTALL 1″ SECTIONS OF BACKER ROD ON 1 FOOT CENTERS

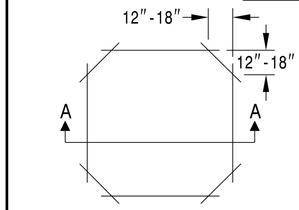

OPTION 2 (POOR PAVEMENT)

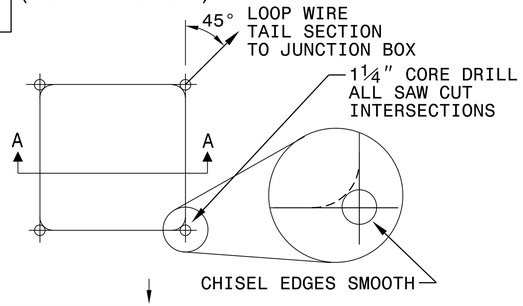

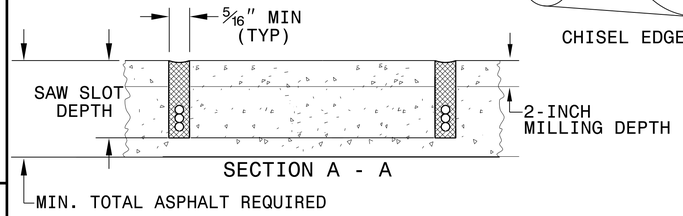

LOOP WINDING METHOD

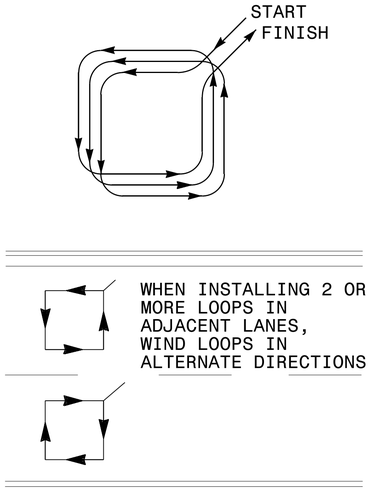

QUADRUPOLE LOOP

SAW CUT OPTIONS

OPTION 1

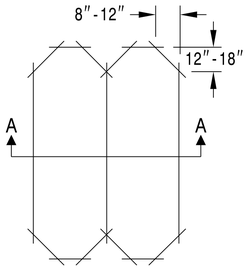

OPTION 2 (POOR PAVEMENT)

INSTALL 1″ SECTIONS OF BACKER ROD ON 1 FOOT CENTERS

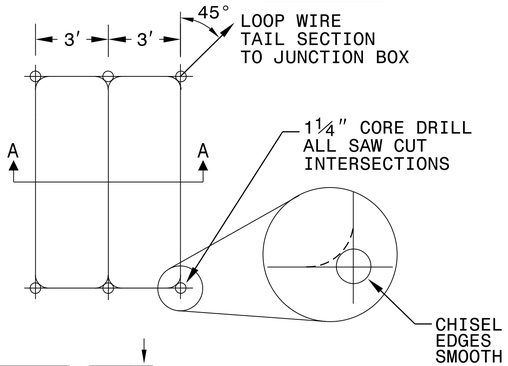

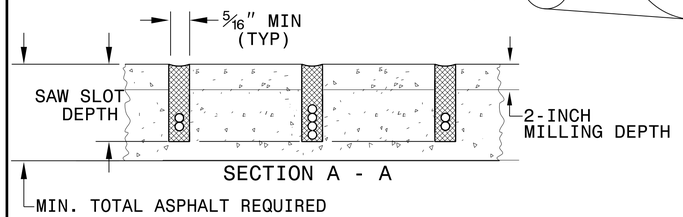

LOOP WINDING METHOD

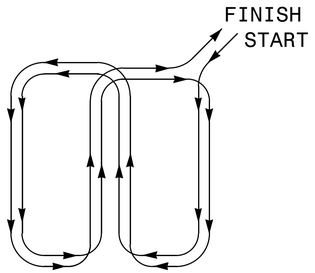

REVISIONS

1. REMOVED TWISTING NOTES FROM TAIL SECT. TO JUNCTION BOX. 2/26/08 MWH
2. REVISED SECTION A - A DETAILS. 6/29/15 JTP

Prepared in the Offices of:
Transportation Mobility and Safety Division
STATE OF NORTH CAROLINA DEPARTMENT OF TRANSPORTATION
Signals Management Section
750 N.Greenfield Pkwy,Garner,NC 27529

SEAL
NORTH CAROLINA PROFESSIONAL SEAL 016286 ENGINEER MILTON I. DEAN

DocuSigned by: Milton I. Dean
CBB5D0A0EUBE
7/1/2015
DATE

STATE OF
NORTH CAROLINA
DEPT. OF TRANSPORTATION
DIVISION OF HIGHWAYS
RALEIGH, N.C.

ENGLISH STANDARD DRAWING FOR

DEEP-CUT INDUCTIVE DETECTION LOOPS

(FOR INSTALLATION PRIOR TO MILLING)

SHEET 1 OF 1