STATE	STATE PROJECT REFERENCE NO.	SHEET NO.	TOTAL SHEETS
N.C.	U-6146	1	6

STATE OF NORTH CAROLINA
DEPARTMENT OF TRANSPORTATION
DIVISION OF HIGHWAYS
GEOTECHNICAL ENGINEERING UNIT

STRUCTURE SUBSURFACE INVESTIGATION

COUNTY GASTON

PROJECT DESCRIPTION US 29/US74 (WILKINSON BLVD) FROM SR 2209 (WESLEYAN DR/MARKET ST) TO SR 2016/SR 2017 (GEORGIA BELLE AVE/HUBBARD ST) AND BRIDGE #350082 OVER SOUTH FORK CATAWBA RIVER

SITE DESCRIPTION RETAINING WALL NO. 4: MECHANICALLY STABILIZED EARTH (MSE) WALL ON -L- FROM 47+90 RT TO 51+60 RT

REFERENCE: U-6146

PROJECT: 48392

CONTENTS

SHEET NO.	DESCRIPTION
1	TITLE SHEET
2	LEGEND (SOIL & ROCK)
3	SITE PLAN AND WALL ENVELOPE
4-6	BORE LOGS

CAUTION NOTICE

THE SUBSURFACE INFORMATION AND THE SUBSURFACE INVESTIGATION ON WHICH IT IS BASED WERE MADE FOR THE PURPOSE OF STUDY, PLANNING AND DESIGN, AND NOT FOR CONSTRUCTION OR PAY PURPOSES. THE VARIOUS FIELD BORING LOGS, ROCK CORES AND SOIL TEST DATA AVAILABLE MAY BE REVIEWED OR INSPECTED IN RALEIGH BY CONTACTING THE N. C. DEPARTMENT OF TRANSPORTATION, GEOTECHNICAL ENGINEERING UNIT AT (919) 707-6850. THE SUBSURFACE PLANS AND REPORTS, FIELD BORING LOGS, ROCK CORES AND SOIL TEST DATA ARE NOT PART OF THE CONTRACT.

GENERAL SOIL AND ROCK STRATA DESCRIPTIONS AND INDICATED BOUNDARIES ARE BASED ON A GEOTECHNICAL INTERPRETATION OF ALL AVAILABLE SUBSURFACE DATA AND MAY NOT NECESSARILY REFLECT THE ACTUAL SUBSURFACE CONDITIONS BETWEEN BORINGS OR BETWEEN SAMPLED STRATA WITHIN THE BOREHOLE. THE LABORATORY SAMPLE DATA AND THE IN SITU (IN-PLACE) TEST DATA CAN BE RELIED ON ONLY TO THE DEGREE OF RELIABILITY INHERENT IN THE STANDARD TEST METHOD. THE OBSERVED WATER LEVELS OR SOIL MOISTURE CONDITIONS INDICATED IN THE SUBSURFACE INVESTIGATIONS ARE AS RECORDED AT THE TIME OF THE INVESTIGATION. THESE WATER LEVELS OR SOIL MOISTURE CONDITIONS MAY VARY CONSIDERABLY WITH TIME ACCORDING TO CLIMATIC CONDITIONS INCLUDING TEMPERATURES, PRECIPITATION AND WIND, AS WELL AS OTHER NON-CLIMATIC FACTORS.

THE BIDDER OR CONTRACTOR IS CAUTIONED THAT DETAILS SHOWN ON THE SUBSURFACE PLANS ARE PRELIMINARY ONLY AND IN MANY CASES THE FINAL DESIGN DETAILS ARE DIFFERENT. FOR BIDDING AND CONSTRUCTION PURPOSES, REFER TO THE CONSTRUCTION PLANS AND DOCUMENTS FOR FINAL DESIGN INFORMATION ON THIS PROJECT. THE DEPARTMENT DOES NOT WARRANT OR GUARANTEE THE SUFFICIENCY OR ACCURACY OF THE INVESTIGATION MADE, NOR THE INTERPRETATIONS MADE, OR OPINION OF THE DEPARTMENT AS TO THE TYPE OF MATERIALS AND CONDITIONS TO BE ENCOUNTERED. THE BIDDER OR CONTRACTOR IS CAUTIONED TO MAKE SUCH INDEPENDENT SUBSURFACE INVESTIGATIONS AS HE DEEMS NECESSARY TO SATISFY HIMSELF AS TO CONDITIONS TO BE ENCOUNTERED ON THE PROJECT. THE CONTRACTOR SHALL HAVE NO CLAIM FOR ADDITIONAL COMPENSATION OR FOR AN EXTENSION OF TIME FOR ANY REASON RESULTING FROM THE ACTUAL CONDITIONS ENCOUNTERED AT THE SITE DIFFERING FROM THOSE INDICATED IN THE SUBSURFACE INFORMATION.

NOTES:
1. THE INFORMATION CONTAINED HEREIN IS NOT IMPLIED OR GUARANTEED BY THE N. C. DEPARTMENT OF TRANSPORTATION AS ACCURATE NOR IS IT CONSIDERED PART OF THE PLANS, SPECIFICATIONS OR CONTRACT FOR THE PROJECT.
2. BY HAVING REQUESTED THIS INFORMATION, THE CONTRACTOR SPECIFICALLY WAIVES ANY CLAIMS FOR INCREASED COMPENSATION OR EXTENSION OF TIME BASED ON DIFFERENCES BETWEEN THE CONDITIONS INDICATED HEREIN AND THE ACTUAL CONDITIONS AT THE PROJECT SITE.

PERSONNEL

M. BREWER

C. ODOM

ITHIR TESTING

D. UNDERWOOD

INVESTIGATED BY CG2

DRAWN BY M. BREWER, P.E.

CHECKED BY R. KRAL, P.E.

SUBMITTED BY M. BREWER, P.E.

DATE MARCH 2020

Prepared in the Office of:

CAROLINAS GEOTECHNICAL GROUP
2400 CROWNPOINT EXECUTIVE DRIVE
SUITE 800
CHARLOTTE, NC 28227
(980) 339-8684

NORTH CAROLINA PROFESSIONAL SEAL 041986 ENGINEER D. MATTHEW BREWER

DocuSigned by:
D. Matthew Brewer
386129C0A4C1462...
SIGNATURE

3/16/2020
DATE

DOCUMENT NOT CONSIDERED FINAL UNLESS ALL SIGNATURES COMPLETED

PROJECT REFERENCE NO.	SHEET NO.
U-6146	2

NORTH CAROLINA DEPARTMENT OF TRANSPORTATION
DIVISION OF HIGHWAYS
GEOTECHNICAL ENGINEERING UNIT

SUBSURFACE INVESTIGATION

SOIL AND ROCK LEGEND, TERMS, SYMBOLS, AND ABBREVIATIONS

SOIL DESCRIPTION

SOIL IS CONSIDERED UNCONSOLIDATED, SEMI-CONSOLIDATED, OR WEATHERED EARTH MATERIALS THAT CAN BE PENETRATED WITH A CONTINUOUS FLIGHT POWER AUGER AND YIELD LESS THAN 100 BLOWS PER FOOT ACCORDING TO THE STANDARD PENETRATION TEST (AASHTO T 206, ASTM D1586). SOIL CLASSIFICATION IS BASED ON THE AASHTO SYSTEM. BASIC DESCRIPTIONS GENERALLY INCLUDE THE FOLLOWING: CONSISTENCY, COLOR, TEXTURE, MOISTURE, AASHTO CLASSIFICATION, AND OTHER PERTINENT FACTORS SUCH AS MINERALOGICAL COMPOSITION, ANGULARITY, STRUCTURE, PLASTICITY, ETC. FOR EXAMPLE,
VERY STIFF, GRAY, SILTY CLAY, MOIST WITH INTERBEDDED FINE SAND LAYERS, HIGHLY PLASTIC, A-7-6

SOIL LEGEND AND AASHTO CLASSIFICATION

GENERAL CLASS.	GRANULAR MATERIALS (≤ 35% PASSING #200)							SILT-CLAY MATERIALS (> 35% PASSING #200)				ORGANIC MATERIALS		
GROUP CLASS.	A-1		A-3	A-2				A-4	A-5	A-6	A-7	A-1, A-2 A-3	A-4, A-5 A-6, A-7	
	A-1-a	A-1-b		A-2-4	A-2-5	A-2-6	A-2-7				A-7-5 A-7-6			
SYMBOL														
% PASSING #10	50 MX											GRANULAR SOILS	SILT-CLAY SOILS	MUCK, PEAT
#40	30 MX	50 MX	51 MN											
#200	15 MX	25 MX	10 MX	35 MX	35 MX	35 MX	35 MX	36 MN	36 MN	36 MN	36 MN			
MATERIAL PASSING #40 LL	—		—	40 MX	41 MN	40 MX	41 MN	40 MX	41 MN	40 MX	41 MN	SOILS WITH LITTLE OR MODERATE AMOUNTS OF ORGANIC MATTER		HIGHLY ORGANIC SOILS
PI	6 MX		NP	10 MX	10 MX	11 MN	11 MN	10 MX	10 MX	11 MN	11 MN			
GROUP INDEX	0		0	0		4 MX		8 MX	12 MX	16 MX	NO MX			
USUAL TYPES OF MAJOR MATERIALS	STONE FRAGS. GRAVEL, AND SAND		FINE SAND	SILTY OR CLAYEY GRAVEL AND SAND				SILTY SOILS		CLAYEY SOILS				
GEN. RATING AS SUBGRADE	EXCELLENT TO GOOD							FAIR TO POOR				FAIR TO POOR	POOR	UNSUITABLE

PI OF A-7-5 SUBGROUP IS ≤ LL - 30 ; PI OF A-7-6 SUBGROUP IS > LL - 30

CONSISTENCY OR DENSENESS

PRIMARY SOIL TYPE	COMPACTNESS OR CONSISTENCY	RANGE OF STANDARD PENETRATION RESISTENCE (N-VALUE)	RANGE OF UNCONFINED COMPRESSIVE STRENGTH ($TONS/FT^2$)
GENERALLY GRANULAR MATERIAL (NON-COHESIVE)	VERY LOOSE LOOSE MEDIUM DENSE DENSE VERY DENSE	< 4 4 TO 10 10 TO 30 30 TO 50 > 50	N/A
GENERALLY SILT-CLAY MATERIAL (COHESIVE)	VERY SOFT SOFT MEDIUM STIFF STIFF VERY STIFF HARD	< 2 2 TO 4 4 TO 8 8 TO 15 15 TO 30 > 30	< 0.25 0.25 TO 0.5 0.5 TO 1.0 1 TO 2 2 TO 4 > 4

TEXTURE OR GRAIN SIZE

U.S. STD. SIEVE SIZE	4	10	40	60	200	270
OPENING (MM)	4.76	2.00	0.42	0.25	0.075	0.053

BOULDER (BLDR.)	COBBLE (COB.)	GRAVEL (GR.)	COARSE SAND (CSE. SD.)	FINE SAND (F SD.)	SILT (SL.)	CLAY (CL.)

GRAIN SIZE MM: 305 | 75 | 2.0 | 0.25 | 0.05 | 0.005
GRAIN SIZE IN.: 12 | 3

SOIL MOISTURE - CORRELATION OF TERMS

SOIL MOISTURE SCALE (ATTERBERG LIMITS)	FIELD MOISTURE DESCRIPTION	GUIDE FOR FIELD MOISTURE DESCRIPTION
	- SATURATED - (SAT.)	USUALLY LIQUID; VERY WET, USUALLY FROM BELOW THE GROUND WATER TABLE
LL — LIQUID LIMIT PLASTIC RANGE (PI) PL — PLASTIC LIMIT	- WET - (W)	SEMISOLID; REQUIRES DRYING TO ATTAIN OPTIMUM MOISTURE
OM — OPTIMUM MOISTURE SL — SHRINKAGE LIMIT	- MOIST - (M)	SOLID; AT OR NEAR OPTIMUM MOISTURE
	- DRY - (D)	REQUIRES ADDITIONAL WATER TO ATTAIN OPTIMUM MOISTURE

PLASTICITY

	PLASTICITY INDEX (PI)	DRY STRENGTH
NON PLASTIC	0-5	VERY LOW
SLIGHTLY PLASTIC	6-15	SLIGHT
MODERATELY PLASTIC	16-25	MEDIUM
HIGHLY PLASTIC	26 OR MORE	HIGH

COLOR

DESCRIPTIONS MAY INCLUDE COLOR OR COLOR COMBINATIONS (TAN, RED, YELLOW-BROWN, BLUE-GRAY). MODIFIERS SUCH AS LIGHT, DARK, STREAKED, ETC. ARE USED TO DESCRIBE APPEARANCE.

GRADATION

WELL GRADED - INDICATES A GOOD REPRESENTATION OF PARTICLE SIZES FROM FINE TO COARSE.
UNIFORMLY GRADED - INDICATES THAT SOIL PARTICLES ARE ALL APPROXIMATELY THE SAME SIZE.
GAP-GRADED - INDICATES A MIXTURE OF UNIFORM PARTICLE SIZES OF TWO OR MORE SIZES.

ANGULARITY OF GRAINS

THE ANGULARITY OR ROUNDNESS OF SOIL GRAINS IS DESIGNATED BY THE TERMS: ANGULAR, SUBANGULAR, SUBROUNDED, OR ROUNDED.

MINERALOGICAL COMPOSITION

MINERAL NAMES SUCH AS QUARTZ, FELDSPAR, MICA, TALC, KAOLIN, ETC. ARE USED IN DESCRIPTIONS WHEN THEY ARE CONSIDERED OF SIGNIFICANCE.

COMPRESSIBILITY

SLIGHTLY COMPRESSIBLE	LL < 31
MODERATELY COMPRESSIBLE	LL = 31 - 50
HIGHLY COMPRESSIBLE	LL > 50

PERCENTAGE OF MATERIAL

ORGANIC MATERIAL	GRANULAR SOILS	SILT - CLAY SOILS	OTHER MATERIAL	
TRACE OF ORGANIC MATTER	2 - 3%	3 - 5%	TRACE	1 - 10%
LITTLE ORGANIC MATTER	3 - 5%	5 - 12%	LITTLE	10 - 20%
MODERATELY ORGANIC	5 - 10%	12 - 20%	SOME	20 - 35%
HIGHLY ORGANIC	> 10%	> 20%	HIGHLY	35% AND ABOVE

GROUND WATER

- WATER LEVEL IN BORE HOLE IMMEDIATELY AFTER DRILLING
- STATIC WATER LEVEL AFTER 24 HOURS
- PW PERCHED WATER, SATURATED ZONE, OR WATER BEARING STRATA
- SPRING OR SEEP

MISCELLANEOUS SYMBOLS

- ROADWAY EMBANKMENT (RE) WITH SOIL DESCRIPTION
- SOIL SYMBOL
- ARTIFICIAL FILL (AF) OTHER THAN ROADWAY EMBANKMENT
- INFERRED SOIL BOUNDARY
- INFERRED ROCK LINE
- ALLUVIAL SOIL BOUNDARY
- 25/025 DIP & DIP DIRECTION OF ROCK STRUCTURES
- SPT DPT DMT VST PMT TEST BORING
- AUGER BORING
- CORE BORING
- MW MONITORING WELL
- PIEZOMETER INSTALLATION
- SLOPE INDICATOR INSTALLATION
- CONE PENETROMETER TEST
- SOUNDING ROD
- TEST BORING WITH CORE
- SPT N-VALUE

RECOMMENDATION SYMBOLS

- UNDERCUT
- SHALLOW UNDERCUT
- UNCLASSIFIED EXCAVATION - UNSUITABLE WASTE
- UNCLASSIFIED EXCAVATION - ACCEPTABLE DEGRADABLE ROCK
- UNCLASSIFIED EXCAVATION - ACCEPTABLE, BUT NOT TO BE USED IN THE TOP 3 FEET OF EMBANKMENT OR BACKFILL

ABBREVIATIONS

AR - AUGER REFUSAL
BT - BORING TERMINATED
CL. - CLAY
CPT - CONE PENETRATION TEST
CSE. - COARSE
DMT - DILATOMETER TEST
DPT - DYNAMIC PENETRATION TEST
e - VOID RATIO
F - FINE
FOSS. - FOSSILIFEROUS
FRAC. - FRACTURED, FRACTURES
FRAGS. - FRAGMENTS
HI. - HIGHLY
MED. - MEDIUM
MICA. - MICACEOUS
MOD. - MODERATELY
NP - NON PLASTIC
ORG. - ORGANIC
PMT - PRESSUREMETER TEST
SAP. - SAPROLITIC
SD. - SAND, SANDY
SL. - SILT, SILTY
SLI. - SLIGHTLY
TCR - TRICONE REFUSAL
w - MOISTURE CONTENT
V - VERY
VST - VANE SHEAR TEST
WEA. - WEATHERED
γ - UNIT WEIGHT
γ_d - DRY UNIT WEIGHT

SAMPLE ABBREVIATIONS
S - BULK
SS - SPLIT SPOON
ST - SHELBY TUBE
RS - ROCK
RT - RECOMPACTED TRIAXIAL
CBR - CALIFORNIA BEARING RATIO

EQUIPMENT USED ON SUBJECT PROJECT

DRILL UNITS:
- [ ] CME-45C
- [ ] CME-55
- [ ] CME-550
- [ ] VANE SHEAR TEST
- [ ] PORTABLE HOIST
- [X] DIEDRICH D50
- [ ] _____

ADVANCING TOOLS:
- [ ] CLAY BITS
- [ ] 6" CONTINUOUS FLIGHT AUGER
- [X] 8" HOLLOW AUGERS
- [ ] HARD FACED FINGER BITS
- [ ] TUNG.-CARBIDE INSERTS
- [ ] CASING [ ] W/ ADVANCER
- [ ] TRICONE ____" STEEL TEETH
- [ ] TRICONE ____" TUNG.-CARB.
- [ ] CORE BIT
- [ ] _____

HAMMER TYPE:
- [X] AUTOMATIC [ ] MANUAL

CORE SIZE:
- [ ] -B _____ [ ] -H _____
- [ ] -N _____

HAND TOOLS:
- [ ] POST HOLE DIGGER
- [ ] HAND AUGER
- [ ] SOUNDING ROD
- [ ] VANE SHEAR TEST
- [ ] _____

ROCK DESCRIPTION

HARD ROCK IS NON-COASTAL PLAIN MATERIAL THAT WOULD YIELD SPT REFUSAL IF TESTED. AN INFERRED ROCK LINE INDICATES THE LEVEL AT WHICH NON-COASTAL PLAIN MATERIAL WOULD YIELD SPT REFUSAL. SPT REFUSAL IS PENETRATION BY A SPLIT SPOON SAMPLER EQUAL TO OR LESS THAN 0.1 FOOT PER 60 BLOWS IN NON-COASTAL PLAIN MATERIAL. THE TRANSITION BETWEEN SOIL AND ROCK IS OFTEN REPRESENTED BY A ZONE OF WEATHERED ROCK.
ROCK MATERIALS ARE TYPICALLY DIVIDED AS FOLLOWS:

WEATHERED ROCK (WR)	NON-COASTAL PLAIN MATERIAL THAT WOULD YIELD SPT N VALUES > 100 BLOWS PER FOOT IF TESTED.
CRYSTALLINE ROCK (CR)	FINE TO COARSE GRAIN IGNEOUS AND METAMORPHIC ROCK THAT WOULD YIELD SPT REFUSAL IF TESTED. ROCK TYPE INCLUDES GRANITE, GNEISS, GABBRO, SCHIST, ETC.
NON-CRYSTALLINE ROCK (NCR)	FINE TO COARSE GRAIN METAMORPHIC AND NON-COASTAL PLAIN SEDIMENTARY ROCK THAT WOULD YEILD SPT REFUSAL IF TESTED. ROCK TYPE INCLUDES PHYLLITE, SLATE, SANDSTONE, ETC.
COASTAL PLAIN SEDIMENTARY ROCK (CP)	COASTAL PLAIN SEDIMENTS CEMENTED INTO ROCK, BUT MAY NOT YIELD SPT REFUSAL. ROCK TYPE INCLUDES LIMESTONE, SANDSTONE, CEMENTED SHELL BEDS, ETC.

WEATHERING

FRESH	ROCK FRESH, CRYSTALS BRIGHT, FEW JOINTS MAY SHOW SLIGHT STAINING. ROCK RINGS UNDER HAMMER IF CRYSTALLINE.
VERY SLIGHT (V SLI.)	ROCK GENERALLY FRESH, JOINTS STAINED, SOME JOINTS MAY SHOW THIN CLAY COATINGS IF OPEN, CRYSTALS ON A BROKEN SPECIMEN FACE SHINE BRIGHTLY. ROCK RINGS UNDER HAMMER BLOWS IF OF A CRYSTALLINE NATURE.
SLIGHT (SLI.)	ROCK GENERALLY FRESH, JOINTS STAINED AND DISCOLORATION EXTENDS INTO ROCK UP TO 1 INCH. OPEN JOINTS MAY CONTAIN CLAY. IN GRANITOID ROCKS SOME OCCASIONAL FELDSPAR CRYSTALS ARE DULL AND DISCOLORED. CRYSTALLINE ROCKS RING UNDER HAMMER BLOWS.
MODERATE (MOD.)	SIGNIFICANT PORTIONS OF ROCK SHOW DISCOLORATION AND WEATHERING EFFECTS. IN GRANITOID ROCKS, MOST FELDSPARS ARE DULL AND DISCOLORED, SOME SHOW CLAY. ROCK HAS DULL SOUND UNDER HAMMER BLOWS AND SHOWS SIGNIFICANT LOSS OF STRENGTH AS COMPARED WITH FRESH ROCK.
MODERATELY SEVERE (MOD. SEV.)	ALL ROCK EXCEPT QUARTZ DISCOLORED OR STAINED. IN GRANITOID ROCKS, ALL FELDSPARS DULL AND DISCOLORED AND A MAJORITY SHOW KAOLINIZATION. ROCK SHOWS SEVERE LOSS OF STRENGTH AND CAN BE EXCAVATED WITH A GEOLOGIST'S PICK. ROCK GIVES "CLUNK" SOUND WHEN STRUCK. *IF TESTED, WOULD YIELD SPT REFUSAL*
SEVERE (SEV.)	ALL ROCK EXCEPT QUARTZ DISCOLORED OR STAINED. ROCK FABRIC CLEAR AND EVIDENT BUT REDUCED IN STRENGTH TO STRONG SOIL. IN GRANITOID ROCKS ALL FELDSPARS ARE KAOLINIZED TO SOME EXTENT. SOME FRAGMENTS OF STRONG ROCK USUALLY REMAIN. *IF TESTED, WOULD YIELD SPT N VALUES > 100 BPF*
VERY SEVERE (V SEV.)	ALL ROCK EXCEPT QUARTZ DISCOLORED OR STAINED. ROCK FABRIC ELEMENTS ARE DISCERNIBLE BUT MASS IS EFFECTIVELY REDUCED TO SOIL STATUS, WITH ONLY FRAGMENTS OF STRONG ROCK REMAINING. SAPROLITE IS AN EXAMPLE OF ROCK WEATHERED TO A DEGREE THAT ONLY MINOR VESTIGES OF ORIGINAL ROCK FABRIC REMAIN. *IF TESTED, WOULD YIELD SPT N VALUES < 100 BPF*
COMPLETE	ROCK REDUCED TO SOIL. ROCK FABRIC NOT DISCERNIBLE, OR DISCERNIBLE ONLY IN SMALL AND SCATTERED CONCENTRATIONS. QUARTZ MAY BE PRESENT AS DIKES OR STRINGERS. SAPROLITE IS ALSO AN EXAMPLE.

ROCK HARDNESS

VERY HARD	CANNOT BE SCRATCHED BY KNIFE OR SHARP PICK. BREAKING OF HAND SPECIMENS REQUIRES SEVERAL HARD BLOWS OF THE GEOLOGIST'S PICK.
HARD	CAN BE SCRATCHED BY KNIFE OR PICK ONLY WITH DIFFICULTY. HARD HAMMER BLOWS REQUIRED TO DETACH HAND SPECIMEN.
MODERATELY HARD	CAN BE SCRATCHED BY KNIFE OR PICK. GOUGES OR GROOVES TO 0.25 INCHES DEEP CAN BE EXCAVATED BY HARD BLOW OF A GEOLOGIST'S PICK. HAND SPECIMENS CAN BE DETACHED BY MODERATE BLOWS.
MEDIUM HARD	CAN BE GROOVED OR GOUGED 0.05 INCHES DEEP BY FIRM PRESSURE OF KNIFE OR PICK POINT. CAN BE EXCAVATED IN SMALL CHIPS TO PEICES 1 INCH MAXIMUM SIZE BY HARD BLOWS OF THE POINT OF A GEOLOGIST'S PICK.
SOFT	CAN BE GROVED OR GOUGED READILY BY KNIFE OR PICK. CAN BE EXCAVATED IN FRAGMENTS FROM CHIPS TO SEVERAL INCHES IN SIZE BY MODERATE BLOWS OF A PICK POINT. SMALL, THIN PIECES CAN BE BROKEN BY FINGER PRESSURE.
VERY SOFT	CAN BE CARVED WITH KNIFE. CAN BE EXCAVATED READILY WITH POINT OF PICK. PIECES 1 INCH OR MORE IN THICKNESS CAN BE BROKEN BY FINGER PRESSURE. CAN BE SCRATCHED READILY BY FINGERNAIL.

FRACTURE SPACING

TERM	SPACING
VERY WIDE	MORE THAN 10 FEET
WIDE	3 TO 10 FEET
MODERATELY CLOSE	1 TO 3 FEET
CLOSE	0.16 TO 1 FOOT
VERY CLOSE	LESS THAN 0.16 FEET

BEDDING

TERM	THICKNESS
VERY THICKLY BEDDED	4 FEET
THICKLY BEDDED	1.5 - 4 FEET
THINLY BEDDED	0.16 - 1.5 FEET
VERY THINLY BEDDED	0.03 - 0.16 FEET
THICKLY LAMINATED	0.008 - 0.03 FEET
THINLY LAMINATED	< 0.008 FEET

INDURATION

FOR SEDIMENTARY ROCKS, INDURATION IS THE HARDENING OF MATERIAL BY CEMENTING, HEAT, PRESSURE, ETC.

FRIABLE	RUBBING WITH FINGER FREES NUMEROUS GRAINS; GENTLE BLOW BY HAMMER DISINTEGRATES SAMPLE.
MODERATELY INDURATED	GRAINS CAN BE SEPARATED FROM SAMPLE WITH STEEL PROBE; BREAKS EASILY WHEN HIT WITH HAMMER.
INDURATED	GRAINS ARE DIFFICULT TO SEPARATE WITH STEEL PROBE; DIFFICULT TO BREAK WITH HAMMER.
EXTREMELY INDURATED	SHARP HAMMER BLOWS REQUIRED TO BREAK SAMPLE; SAMPLE BREAKS ACROSS GRAINS.

TERMS AND DEFINITIONS

ALLUVIUM (ALLUV.) - SOILS THAT HAVE BEEN TRANSPORTED BY WATER.

AQUIFER - A WATER BEARING FORMATION OR STRATA.

ARENACEOUS - APPLIED TO ROCKS THAT HAVE BEEN DERIVED FROM SAND OR THAT CONTAIN SAND.

ARGILLACEOUS - APPLIED TO ALL ROCKS OR SUBSTANCES COMPOSED OF CLAY MINERALS, OR HAVING A NOTABLE PROPORTION OF CLAY IN THEIR COMPOSITION, SUCH AS SHALE, SLATE, ETC.

ARTESIAN - GROUND WATER THAT IS UNDER SUFFICIENT PRESSURE TO RISE ABOVE THE LEVEL AT WHICH IT IS ENCOUNTERED, BUT WHICH DOES NOT NECESSARILY RISE TO OR ABOVE THE GROUND SURFACE.

CALCAREOUS (CALC.) - SOILS THAT CONTAIN APPRECIABLE AMOUNTS OF CALCIUM CARBONATE.

COLLUVIUM - ROCK FRAGMENTS MIXED WITH SOIL DEPOSITED BY GRAVITY ON SLOPE OR AT BOTTOM OF SLOPE.

CORE RECOVERY (REC.) - TOTAL LENGTH OF ALL MATERIAL RECOVERED IN THE CORE BARREL DIVIDED BY TOTAL LENGTH OF CORE RUN AND EXPRESSED AS A PERCENTAGE.

DIKE - A TABULAR BODY OF IGNEOUS ROCK THAT CUTS ACROSS THE STRUCTURE OF ADJACENT ROCKS OR CUTS MASSIVE ROCK.

DIP - THE ANGLE AT WHICH A STRATUM OR ANY PLANAR FEATURE IS INCLINED FROM THE HORIZONTAL.

DIP DIRECTION (DIP AZIMUTH) - THE DIRECTION OR BEARING OF THE HORIZONTAL TRACE OF THE LINE OF DIP, MEASURED CLOCKWISE FROM NORTH.

FAULT - A FRACTURE OR FRACTURE ZONE ALONG WHICH THERE HAS BEEN DISPLACEMENT OF THE SIDES RELATIVE TO ONE ANOTHER PARALLEL TO THE FRACTURE.

FISSILE - A PROPERTY OF SPLITTING ALONG CLOSELY SPACED PARALLEL PLANES.

FLOAT - ROCK FRAGMENTS ON SURFACE NEAR THEIR ORIGINAL POSITION AND DISLODGED FROM PARENT MATERIAL.

FLOOD PLAIN (FP) - LAND BORDERING A STREAM, BUILT OF SEDIMENTS DEPOSITED BY THE STREAM.

FORMATION (FM.) - A MAPPABLE GEOLOGIC UNIT THAT CAN BE RECOGNIZED AND TRACED IN THE FIELD.

JOINT - FRACTURE IN ROCK ALONG WHICH NO APPRECIABLE MOVEMENT HAS OCCURRED.

LEDGE - A SHELF-LIKE RIDGE OR PROJECTION OF ROCK WHOSE THICKNESS IS SMALL COMPARED TO ITS LATERAL EXTENT.

LENS - A BODY OF SOIL OR ROCK THAT THINS OUT IN ONE OR MORE DIRECTIONS.

MOTTLED (MOT.) - IRREGULARLY MARKED WITH SPOTS OF DIFFERENT COLORS. MOTTLING IN SOILS USUALLY INDICATES POOR AERATION AND LACK OF GOOD DRAINAGE.

PERCHED WATER - WATER MAINTAINED ABOVE THE NORMAL GROUND WATER LEVEL BY THE PRESENCE OF AN INTERVENING IMPERVIOUS STRATUM.

RESIDUAL (RES.) SOIL - SOIL FORMED IN PLACE BY THE WEATHERING OF ROCK.

ROCK QUALITY DESIGNATION (RQD) - A MEASURE OF ROCK QUALITY DESCRIBED BY TOTAL LENGTH OF ROCK SEGMENTS EQUAL TO OR GREATER THAN 4 INCHES DIVIDED BY THE TOTAL LENGTH OF CORE RUN AND EXPRESSED AS A PERCENTAGE.

SAPROLITE (SAP.) - RESIDUAL SOIL THAT RETAINS THE RELIC STRUCTURE OR FABRIC OF THE PARENT ROCK.

SILL - AN INTRUSIVE BODY OF IGNEOUS ROCK OF APPROXIMATELY UNIFORM THICKNESS AND RELATIVELY THIN COMPARED WITH ITS LATERAL EXTENT, THAT HAS BEEN EMPLACED PARALLEL TO THE BEDDING OR SCHISTOSITY OF THE INTRUDED ROCKS.

SLICKENSIDE - POLISHED AND STRIATED SURFACE THAT RESULTS FROM FRICTION ALONG A FAULT OR SLIP PLANE.

STANDARD PENETRATION TEST (PENETRATION RESISTANCE) (SPT) - NUMBER OF BLOWS (N OR BPF) OF A 140 LB. HAMMER FALLING 30 INCHES REQUIRED TO PRODUCE A PENETRATION OF 1 FOOT INTO SOIL WITH A 2 INCH OUTSIDE DIAMETER SPLIT SPOON SAMPLER. SPT REFUSAL IS PENETRATION EQUAL TO OR LESS THAN 0.1 FOOT PER 60 BLOWS.

STRATA CORE RECOVERY (SREC.) - TOTAL LENGTH OF STRATA MATERIAL RECOVERED DIVIDED BY TOTAL LENGTH OF STRATUM AND EXPRESSED AS A PERCENTAGE.

STRATA ROCK QUALITY DESIGNATION (SRQD) - A MEASURE OF ROCK QUALITY DESCRIBED BY TOTAL LENGTH OF ROCK SEGMENTS WITHIN A STRATUM EQUAL TO OR GREATER THAN 4 INCHES DIVIDED BY THE TOTAL LENGTH OF STRATA AND EXPRESSED AS A PERCENTAGE.

TOPSOIL (TS.) - SURFACE SOILS USUALLY CONTAINING ORGANIC MATTER.

BENCH MARK: N/A

ELEVATION: FEET

NOTES:

SURVEY AND ROADWAY DESIGN FILES PROVIDED BY TGS ENGINEERS ON 12/05/2019

DATE: 8-15-14

RETAINING WALL NO. 4:

PROJECT REFERENCE NO.	SHEET NO.
U-6146	3
R/W SHEET NO.	
ROADWAY DESIGN ENGINEER	HYDRAULICS ENGINEER

INCOMPLETE PLANS
DO NOT USE FOR R/W ACQUISITION

DOCUMENT NOT CONSIDERED FINAL UNLESS ALL SIGNATURES COMPLETED

TGS ENGINEERS
804-C N. LAFAYETTE ST
SHELBY, NC 28150
PH (704) 476-0003
CORP. LICENSE NO.: C-0275

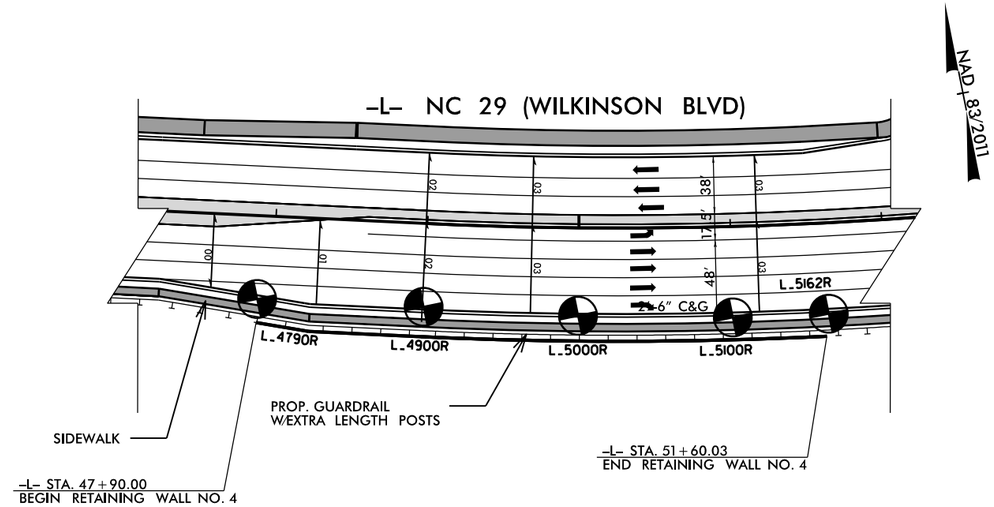

100 FT = 1 INCH

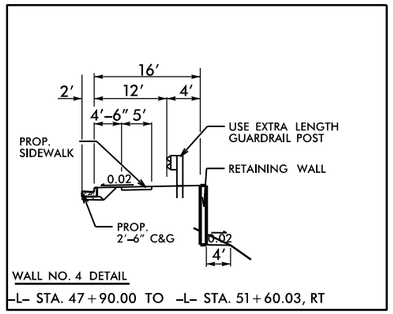

WALL NO. 4 DETAIL
-L- STA. 47+90.00 TO -L- STA. 51+60.03, RT

NOT TO SCALE

THE WALL ENVELOPE DOES NOT ACCURATELY DEPICT THE ACTUAL FACE OF THE WALL AT THE FOLLOWING LOCATION:
-L- STA. 47+90.00 TO 48+50.00, RT

SOIL TEST RESULTS

SAMPLE NO.	OFFSET	STATION	DEPTH INTERVAL	AASHTO CLASS.	L.L.	P.I.	% BY WEIGHT C. SAND	F. SAND	SILT	CLAY	% PASSING (SIEVES) 10	40	200	% MOISTURE	% ORGANIC
SS-181	55' RT	49+00 -L-	6.0 - 7.5'	A-7-5(11)	48	18	18.1	17.5	25.8	38.6	97.0	86.0	65.8	23.4	-
SS-178	58' RT	50+00 -L-	13.5 - 15.0'	A-4(0)	33	0	23.5	32.0	30.8	13.7	98.0	83.0	47.8	20.0	-
SS-169	60' RT	51+00 -L-	3.5 - 5.0'	A-7-5(28)	65	33	8.0	16.2	25.1	50.7	99.0	95.0	77.3	29.0	-

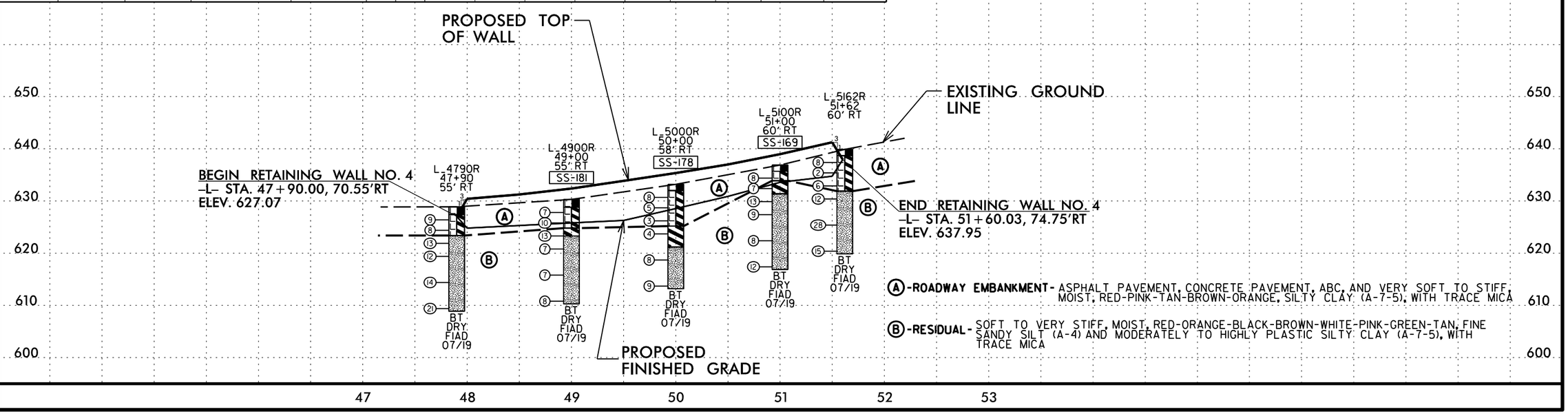

A -ROADWAY EMBANKMENT- ASPHALT PAVEMENT, CONCRETE PAVEMENT, ABC, AND VERY SOFT TO STIFF, MOIST, RED-PINK-TAN-BROWN-ORANGE, SILTY CLAY (A-7-5), WITH TRACE MICA

B -RESIDUAL- SOFT TO VERY STIFF, MOIST, RED-ORANGE-BLACK-BROWN-WHITE-PINK-GREEN-TAN, FINE SANDY SILT (A-4) AND MODERATELY TO HIGHLY PLASTIC SILTY CLAY (A-7-5), WITH TRACE MICA

REVISIONS

8/17/99

16-MAR-2020 09:0
C:\Users\mbrewer\OneDrive - Carolinas Geotechnical Group, PLLC\Projects\0007 - U-6146 Cramerton Bridge and Widening\CADD_GEOTECH\PlanProf\U-6146_Rdy_dsn_RetainingWalls.dgn
$$$$CFNAME$$$$

GEOTECHNICAL BORING REPORT
BORE LOG

WBS 48392.1.1	**TIP** U-6146	**COUNTY** GASTON	**GEOLOGIST** M. Brewer
SITE DESCRIPTION Retaining Wall No. 4 on -L- from 47+90 RT to 51+60 RT			**GROUND WTR (ft)**
BORING NO. L_4790R	**STATION** 47+90	**OFFSET** 55 ft RT	**ALIGNMENT** -L-	**0 HR.** Dry
COLLAR ELEV. 628.9 ft	**TOTAL DEPTH** 20.0 ft	**NORTHING** 551,536	**EASTING** 1,382,567	**24 HR.** FIAD
DRILL RIG/HAMMER EFF./DATE CG20446 Diedrich D50 89% 05/22/2019		**DRILL METHOD** H.S. Augers	**HAMMER TYPE** Automatic
DRILLER C. Odom	**START DATE** 07/19/19	**COMP. DATE** 07/19/19	**SURFACE WATER DEPTH** N/A

ELEV (ft)	DRIVE ELEV (ft)	DEPTH (ft)	BLOW COUNT 0.5ft	0.5ft	0.5ft	BLOWS PER FOOT 0 25 50 75 100	SAMP. NO.	MOI	LOG	SOIL AND ROCK DESCRIPTION ELEV. (ft)	DEPTH (ft)
630										628.9 GROUND SURFACE	0.0
	627.4	1.5								627.4 Asphalt (0.7 ft) and ABC (0.8 ft)	1.5
625	625.4	3.5	4	4	5	9		M		**ROADWAY EMBANKMENT** Medium Stiff to Stiff, Red-Pink-Tan, Silty CLAY (A-7-5), with trace mica	
	622.9	6.0	2	3	5	8		M		623.4	5.5
620	620.4	8.5	3	5	8	13		M		**RESIDUAL** Stiff to Very Stiff, Red-Orange-Black-Brown-White, Fine Sandy SILT (A-4), with trace mica	
			4	5	7	12		M			
615	615.4	13.5	4	7	7	14		M			
610	610.4	18.5	4	6	15	21		M		608.9	20.0
										Boring Terminated at Elevation 608.9 ft In Residual Fine Sandy SILT (A-4)	

WBS 48392.1.1	**TIP** U-6146	**COUNTY** GASTON	**GEOLOGIST** M. Brewer
SITE DESCRIPTION Retaining Wall No. 4 on -L- from 47+90 RT to 51+60 RT			**GROUND WTR (ft)**
BORING NO. L_4900R	**STATION** 49+00	**OFFSET** 55 ft RT	**ALIGNMENT** -L-	**0 HR.** Dry
COLLAR ELEV. 630.3 ft	**TOTAL DEPTH** 20.0 ft	**NORTHING** 551,509	**EASTING** 1,382,674	**24 HR.** FIAD
DRILL RIG/HAMMER EFF./DATE CG20446 Diedrich D50 89% 05/22/2019		**DRILL METHOD** H.S. Augers	**HAMMER TYPE** Automatic
DRILLER C. Odom	**START DATE** 07/19/19	**COMP. DATE** 07/19/19	**SURFACE WATER DEPTH** N/A

ELEV (ft)	DRIVE ELEV (ft)	DEPTH (ft)	BLOW COUNT 0.5ft	0.5ft	0.5ft	BLOWS PER FOOT 0 25 50 75 100	SAMP. NO.	MOI	LOG	SOIL AND ROCK DESCRIPTION	
635											
630										630.3 GROUND SURFACE	0.0
	628.8	1.5	4	3	4	7		M		628.8 Asphalt (0.7 ft) and ABC (0.8 ft)	1.5
	626.8	3.5	3	4	6	10		M		**ROADWAY EMBANKMENT** Medium Stiff to Stiff, Red, Silty CLAY (A-7-5)	
625	624.3	6.0	3	6	7	13	SS-181	23%		624.8	5.5
	621.8	8.5	3	3	4	7		M		623.3 **RESIDUAL** Stiff, Red-Black-Orange, Silty CLAY (A-7-5(11))	7.0
620	616.8	13.5	2	3	4	7		M		Medium Stiff, Green-Orange-Red-Tan-White-Brown, Fine Sandy SILT (A-4), with trace mica	
615	611.8	18.5	3	4	4	8		M		610.3	20.0
										Boring Terminated at Elevation 610.3 ft In Residual Fine Sandy SILT (A-4)	

NCDOT BORE DOUBLE B-5857_U-6146_GEO_RDY_BORINGS.GPJ NC_DOT.GDT 1/7/20

GEOTECHNICAL BORING REPORT
BORE LOG

WBS 48392.1.1	**TIP** U-6146	**COUNTY** GASTON	**GEOLOGIST** M. Brewer
SITE DESCRIPTION Retaining Wall No. 4 on -L- from 47+90 RT to 51+60 RT			**GROUND WTR (ft)**
BORING NO. L_5000R	**STATION** 50+00	**OFFSET** 58 ft RT	**ALIGNMENT** -L-	**0 HR.** Dry
COLLAR ELEV. 633.2 ft	**TOTAL DEPTH** 20.0 ft	**NORTHING** 551,482	**EASTING** 1,382,773	**24 HR.** FIAD
DRILL RIG/HAMMER EFF./DATE CG20446 Diedrich D50 89% 05/22/2019		**DRILL METHOD** H.S. Augers	**HAMMER TYPE** Automatic
DRILLER C. Odom	**START DATE** 07/19/19	**COMP. DATE** 07/19/19	**SURFACE WATER DEPTH** N/A

ELEV (ft)	DRIVE ELEV (ft)	DEPTH (ft)	BLOW COUNT 0.5ft	0.5ft	0.5ft	BLOWS PER FOOT 0 25 50 75 100	SAMP. NO.	MOI	LOG	SOIL AND ROCK DESCRIPTION ELEV. (ft)	DEPTH (ft)
635											
										633.2 GROUND SURFACE	0.0
										632.0 Asphalt (1.2 ft)	1.2
	631.7	1.5								**ROADWAY EMBANKMENT** Soft to Medium Stiff, Red-Pink-Tan, Silty CLAY (A-7-5), with trace mica	
630			5	4	4	8		M			
	629.7	3.5									
			2	2	3	5		M			
	627.2	6.0									
			2	1	2	3		M			
625	624.7	8.5								625.2 **RESIDUAL** Soft, Red, Silty CLAY (A-7-5)	8.0
			2	2	2	4		M			
620	619.7	13.5								621.2 Medium Stiff to Stiff, Red-Orange-Tan, Fine Sandy SILT (A-4(0)), with trace mica	12.0
			4	4	4	8	SS-178	20%			
615	614.7	18.5									
			4	5	4	9		M		613.2 Boring Terminated at Elevation 613.2 ft In Residual Fine Sandy SILT (A-4)	20.0

WBS 48392.1.1	**TIP** U-6146	**COUNTY** GASTON	**GEOLOGIST** M. Brewer
SITE DESCRIPTION Retaining Wall No. 4 on -L- from 47+90 RT to 51+60 RT			**GROUND WTR (ft)**
BORING NO. L_5100R	**STATION** 51+00	**OFFSET** 60 ft RT	**ALIGNMENT** -L-	**0 HR.** Dry
COLLAR ELEV. 636.9 ft	**TOTAL DEPTH** 20.0 ft	**NORTHING** 551,461	**EASTING** 1,382,872	**24 HR.** FIAD
DRILL RIG/HAMMER EFF./DATE CG20446 Diedrich D50 89% 05/22/2019		**DRILL METHOD** H.S. Augers	**HAMMER TYPE** Automatic
DRILLER C. Odom	**START DATE** 07/19/19	**COMP. DATE** 07/19/19	**SURFACE WATER DEPTH** N/A

ELEV (ft)	DRIVE ELEV (ft)	DEPTH (ft)	BLOW COUNT 0.5ft	0.5ft	0.5ft	BLOWS PER FOOT 0 25 50 75 100	SAMP. NO.	MOI	LOG	SOIL AND ROCK DESCRIPTION
640										
										636.9 GROUND SURFACE 0.0
										635.7 Asphalt (1.2 ft) 1.2
635	635.4	1.5								**ROADWAY EMBANKMENT**
			3	4	4	8		M		633.9 Medium Stiff, Red-Brown, Silty CLAY (A-7-5), with trace mica 3.0
	633.4	3.5								
			2	3	4	7	SS-169	29%		
	630.9	6.0								
630			4	6	7	13		M		631.4 **RESIDUAL** Medium Stiff, Red, Silty CLAY (A-7-5(28)), with trace mica 5.5
	628.4	8.5								
			4	4	5	9		M		Medium Stiff to Stiff, Red-Orange-Tan, Fine Sandy SILT (A-4), with trace mica
625										
	623.4	13.5								
			3	4	4	8		M		
620										
	618.4	18.5								
			3	6	6	12		M		616.9 Boring Terminated at Elevation 616.9 ft In Residual Fine Sandy SILT (A-4) 20.0

GEOTECHNICAL BORING REPORT
BORE LOG

WBS 48392.1.1	**TIP** U-6146	**COUNTY** GASTON	**GEOLOGIST** M. Brewer
SITE DESCRIPTION Retaining Wall No. 4 on -L- from 47+90 RT to 51+60 RT			**GROUND WTR (ft)**
BORING NO. L_5162R	**STATION** 51+62	**OFFSET** 60 ft RT	**ALIGNMENT** -L-	**0 HR.** Dry
COLLAR ELEV. 639.9 ft	**TOTAL DEPTH** 20.0 ft	**NORTHING** 551,451	**EASTING** 1,382,935	**24 HR.** FIAD
DRILL RIG/HAMMER EFF./DATE CG20446 Diedrich D50 89% 05/22/2019		**DRILL METHOD** H.S. Augers	**HAMMER TYPE** Automatic
DRILLER C. Odom	**START DATE** 07/19/19	**COMP. DATE** 07/19/19	**SURFACE WATER DEPTH** N/A

ELEV (ft)	DRIVE ELEV (ft)	DEPTH (ft)	BLOW COUNT 0.5ft	0.5ft	0.5ft	BLOWS PER FOOT 0 25 50 75 100	SAMP. NO.	MOI	LOG	SOIL AND ROCK DESCRIPTION ELEV. (ft)	DEPTH (ft)
640										639.9 GROUND SURFACE	0.0
	638.4	1.5								638.7 Asphalt (1.2 ft)	1.2
			4	4	4	8		M		**ROADWAY EMBANKMENT** Very Soft to Medium Stiff, Red-Orange-Brown, Moderately Plastic Silty CLAY (A-7-5), with trace mica	
	636.4	3.5									
635			1	1	1	2		M			
	633.9	6.0									
			1	2	4	6		M			
	631.4	8.5								631.9	8.0
630			2	5	7	12		M		**RESIDUAL** Stiff to Very Stiff, Tan-Pink-Red-Brown-White, Fine Sandy SILT (A-4), with trace mica	
	626.4	13.5									
625			8	16	12	28		M			
	621.4	18.5									
620			5	7	8	15		M		619.9	20.0
										Boring Terminated at Elevation 619.9 ft In Residual Fine Sandy SILT (A-4)	