PROJECT REFERENCE NO.	SHEET NO.
BR-0140	EC-2A
R/W SHEET NO.	
ROADWAY DESIGN ENGINEER	HYDRAULICS ENGINEER

ONSITE CONCRETE WASHOUT STRUCTURE WITH LINER

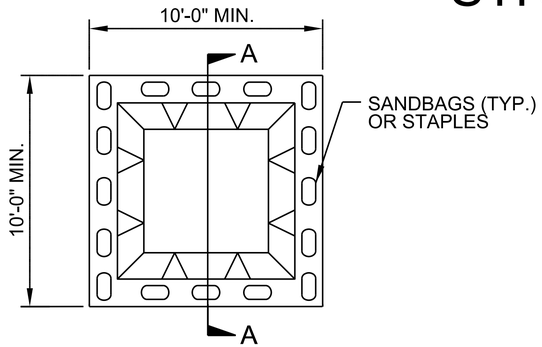

PLAN

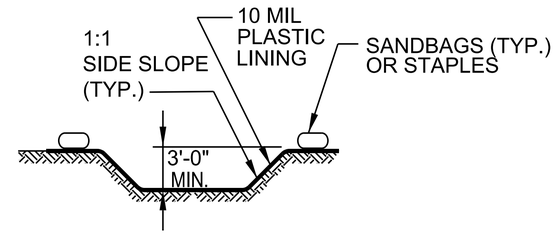

SECTION A-A

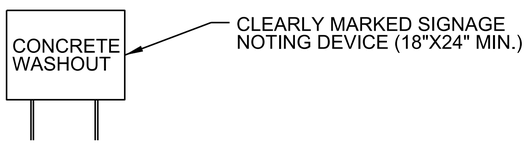

NOTES:
1. ACTUAL LOCATION DETERMINED IN FIELD

2. THE CONCRETE WASHOUT STRUCTURES SHALL BE MAINTAINED WHEN THE LIQUID AND/OR SOLID REACHES 75% OF THE STRUCTURES CAPACITY TO PROVIDE ADEQUATE HOLDING CAPACITY WITH A MINIMUM 12 INCHES OF FREEBOARD.

3.CONCRETE WASHOUT STRUCTURE NEEDS TO BE CLEARLY MARKED WITH SIGNAGE NOTING DEVICE.

BELOW GRADE WASHOUT STRUCTURE

NOT TO SCALE

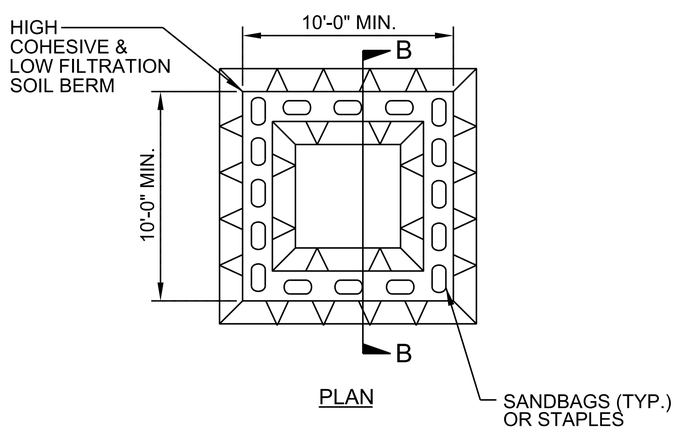

PLAN

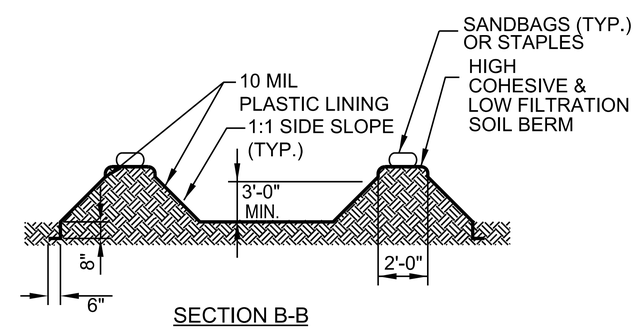

SECTION B-B

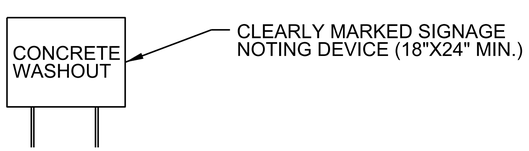

NOTES:
1. ACTUAL LOCATION DETERMINED IN FIELD

2. THE CONCRETE WASHOUT STRUCTURES SHALL BE MAINTAINED WHEN THE LIQUID AND/OR SOLID REACHES 75% OF THE STRUCTURES CAPACITY TO PROVIDE ADEQUATE HOLDING CAPACITY WITH A MINIMUM 12 INCHES OF FREEBOARD.

3.CONCRETE WASHOUT STRUCTURE NEEDS TO BE CLEARLY MARKED WITH SIGNAGE NOTING DEVICE.

ABOVE GRADE WASHOUT STRUCTURE

NOT TO SCALE