Docusign Envelope ID: B74B6280-E780-82D8-80CB-7FD3653FE056

PROJECT REFERENCE NO.	SHEET NO.
U-5728	Sig. 2.2

18 CHANNEL IP CONFLICT MONITOR PROGRAMMING DETAIL

(remove jumpers and set switches as shown)

REMOVE DIODE JUMPERS 1-5, 1-6, 1-9, 2-5, 2-6, 2-9, 2-11, 2-13, 3-7, 3-8, 3-9, 4-7, 4-8, 4-9, 4-12, 4-14, 5-11, 5-13, 6-9, 6-11, 6-13, 7-9, 7-12, 7-14, 8-12, 8-14, 9-11, 9-13, 9-14, 11-13, and 12-14

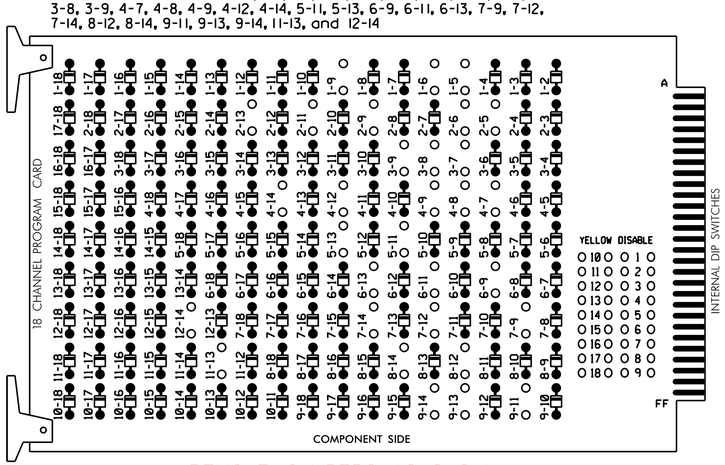

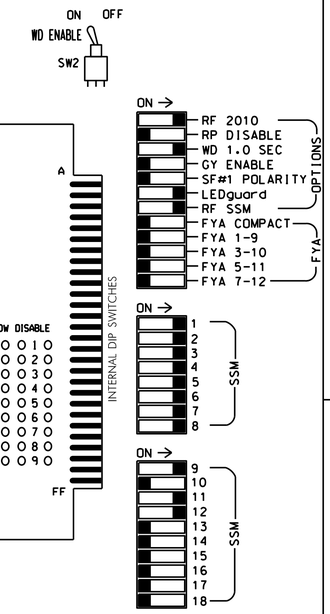

■ = DENOTES POSITION OF SWITCH

REMOVE JUMPERS AS SHOWN

NOTES:

1. Card is provided with all diode jumpers in place. Removal of any jumper allows its channels to run concurrently.
2. Ensure jumpers SEL2-SEL5 and SEL9 are present on the monitor board.
3. Ensure that Red Enable is active at all times during normal operation.
4. Integrate monitor with Ethernet network in cabinet.

NOTES

1. To prevent "flash-conflict" problems, insert red flash program blocks for all vehicle load switches in the output file. The installer shall verify that signal heads flash in accordance with the Signal Plans.
2. Enable Simultaneous Gap-Out for all phases.
3. Program phases 2 and 6 as First Phases.
4. Do Not program phases 2 and 4 for 'STARTUP PED CALL'.
5. Disable all phases for Start up in Green.
6. Disable all phases for Yellow Flash.
7. Program overlap 1 as Wag Overlaps.
8. The cabinet and controller are part of the Jacksonville City Signal System.

EQUIPMENT INFORMATION

CONTROLLER.....2070
CABINET.....332 W/ AUX
SOFTWARE .....ECONOLITE OASIS
CABINET MOUNT.....BASE
OUTPUT FILE POSITIONS..18 WITH AUX. OUTPUT FILE
LOAD SWITCHES USED.....S1, S2, S4, S5, S7, S8, S10, S11, AUX S1, AUX S4, AUX S5
PHASES USED.....1,2,2PED,3,4,4PED,5,6,7,8
OVERLAP "A".....6+7
OVERLAP "B".....NOT USED
OVERLAP "C".....2
OVERLAP "D".....4

SIGNAL HEAD HOOK-UP CHART

LOAD SWITCH NO.	S1	S2	S3	S4	S5	S6	S7	S8	S9	S10	S11	S12	AUX S1	AUX S2	AUX S3	AUX S4	AUX S5	AUX S6
CMU CHANNEL NO.	1	2	13	3	4	14	5	6	15	7	8	16	9	10	17	11	12	18
PHASE	1	2	2 PED	3	4	4 PED	5	6	6 PED	7	8	8 PED	OLA	OLB	SPARE	OLC	OLD	SPARE
SIGNAL HEAD NO.	11	21,22	P21 P22	31,32	41,42	P41 P42	51,52	61,62	NU	71,72	81,82	NU	63★	NU	NU	23★	43★	NU
RED		128			101			134			107		A121			A114	A101	
YELLOW		129			102			135			108							
GREEN		130			103			136			109							
RED ARROW	125			116			131			122								
YELLOW ARROW	126			117			132			123			A122			A115	A102	
FLASHING YELLOW ARROW													A123			A116	A103	
GREEN ARROW	127			118			133			124								
✋			113			104												
🚶			115			106												

NU = Not Used

FYA SIGNAL WIRING DETAIL

(wire signal heads as shown)

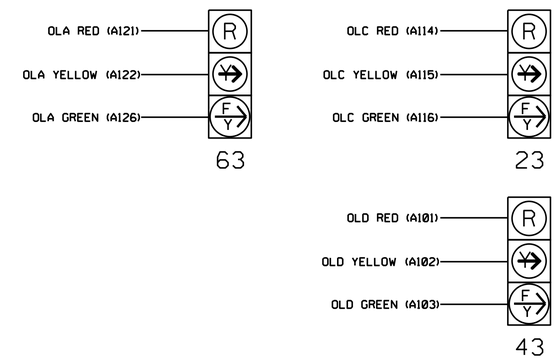

INPUT FILE POSITION LAYOUT

(front view)

		1	2	3	4	5	6	7	8	9	10	11	12	13	14
FILE "I"	U	SLOT EMPTY	SLOT EMPTY	SLOT EMPTY	SLOT EMPTY	SLOT EMPTY	SLOT EMPTY	SLOT EMPTY	SLOT EMPTY	SLOT EMPTY	SLOT EMPTY	SLOT EMPTY	Ø2 PED DC ISOLATOR	SLOT EMPTY	FS DC ISOLATOR
	L												Ø4 PED DC ISOLATOR		ST DC ISOLATOR
FILE "J"	U	SLOT EMPTY	SLOT EMPTY	SLOT EMPTY	SLOT EMPTY	SLOT EMPTY	SLOT EMPTY	SLOT EMPTY	SLOT EMPTY	SLOT EMPTY	SLOT EMPTY	SLOT EMPTY	PRE3 Opticom 2 Ch. Card	SLOT EMPTY	SLOT EMPTY
	L												PRE5		

EX.: 1A, 2A, ETC. = LOOP NO.'S

FS = FLASH SENSE
ST = STOP TIME
PRE = PREEMPT

INPUT FILE CONNECTION & PROGRAMMING CHART

LOOP NO.	LOOP TERMINAL	INPUT FILE POS.	PIN NO.	INPUT ASSIGNMENT NO.	DETECTOR NO.	NEMA PHASE	CALL	EXTEND	FULL TIME DELAY	STRETCH TIME	DELAY TIME
PED PUSH BUTTONS											
P21,P22	TB8-4,6	I12U	67	29	PED 2	2 PED					
P41,P42	TB8-5,6	I12L	69	31	PED 4	4 PED					

NOTE:
INSTALL DC ISOLATORS IN INPUT FILE SLOT I12.

INPUT FILE POSITION LEGEND: J2L
FILE J
SLOT 2
LOWER

SPECIAL DETECTOR NOTE

Install a multizone microwave detection zone for vehicle detection. Perform installation according to manufacturer's directions and NCDOT engineer-approved mounting locations to accomplish the detection schemes shown on the Signal Design Plans.

TYPICAL OPTICOM FIELD WIRE DETAIL

(input file, rear view)

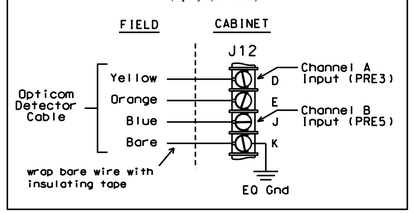

THIS ELECTRICAL DETAIL IS FOR
THE SIGNAL DESIGN: 03-0090
DESIGNED: July 2026
SEALED: 7-21-2026
REVISED: N/A

Project #: 230906

DAVENPORT
HOME OFFICE:
119 BROOKSTOWN AVENUE, SUITE PH1
WINSTON-SALEM, NC 27101
336.744.1636 www.davenportworld.com
NCBELS FIRM LICENSE NO. C-2522

Temporary Design 1 (TMP Phase 2-Step1)
Electrical Detail - Sheet 1 of 3

DOCUMENT NOT CONSIDERED FINAL UNLESS ALL SIGNATURES COMPLETED

ELECTRICAL AND PROGRAMMING DETAILS FOR:

US 17 Bus. (Marine Boulevard) at SR 1308 (Gum Branch Road/ Bell Fork Road)

Division 03 Onslow County Jacksonville

PLAN DATE: July 2026	REVIEWED BY: D. Bennett
PREPARED BY: B. Dowell	REVIEWED BY:

REVISIONS	INIT.	DATE

Prepared for: Traffic Engineering & Signal Management Division, Mobility and Safety Division, NORTH CAROLINA DEPARTMENT OF TRANSPORTATION
750 N.Greenfield Pkwy,Garner,NC 27529

SEAL
NORTH CAROLINA PROFESSIONAL SEAL 020608 ENGINEER DONALD R. BENNETT, II

Signed: Donald R. Bennett II
2CE83701D4D84FC...
7/22/2026
SIGNATURE DATE

SIG. INVENTORY NO. 03-0090T1