TIP PROJECT: I-6011A

CONTRACT: C205205

STRUCTURE

STATE	STATE PROJECT REFERENCE NO.	SHEET NO.	TOTAL SHEETS
N.C.	I-6011A		

STATE PROJ. NO.	F. A. PROJ. NO.	DESCRIPTION
48690.2.1	N/A	PE
48690.2.2	4869001	ROW
48690.2.3	4869001	UTIL
48690.3.2	4869001	CONST

STATE OF NORTH CAROLINA
DIVISION OF HIGHWAYS

ROBESON COUNTY

LOCATION: US 74 CONVERT AT GRADE INTERSECTION OF US 74 AND SR 2225 (CREEK ROAD) TO GRADE SEPARATION

TYPE OF WORK: PAVING, GRADING, DRAINAGE, AND STRUCTURE

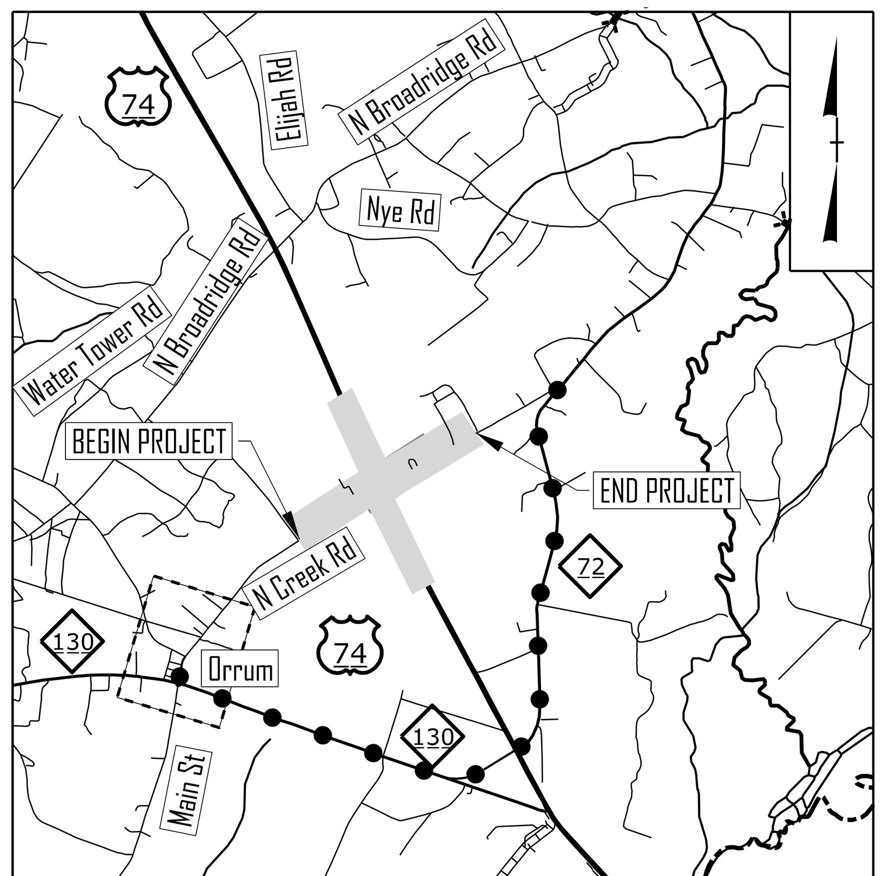

VICINITY MAP (NTS)

DETOUR

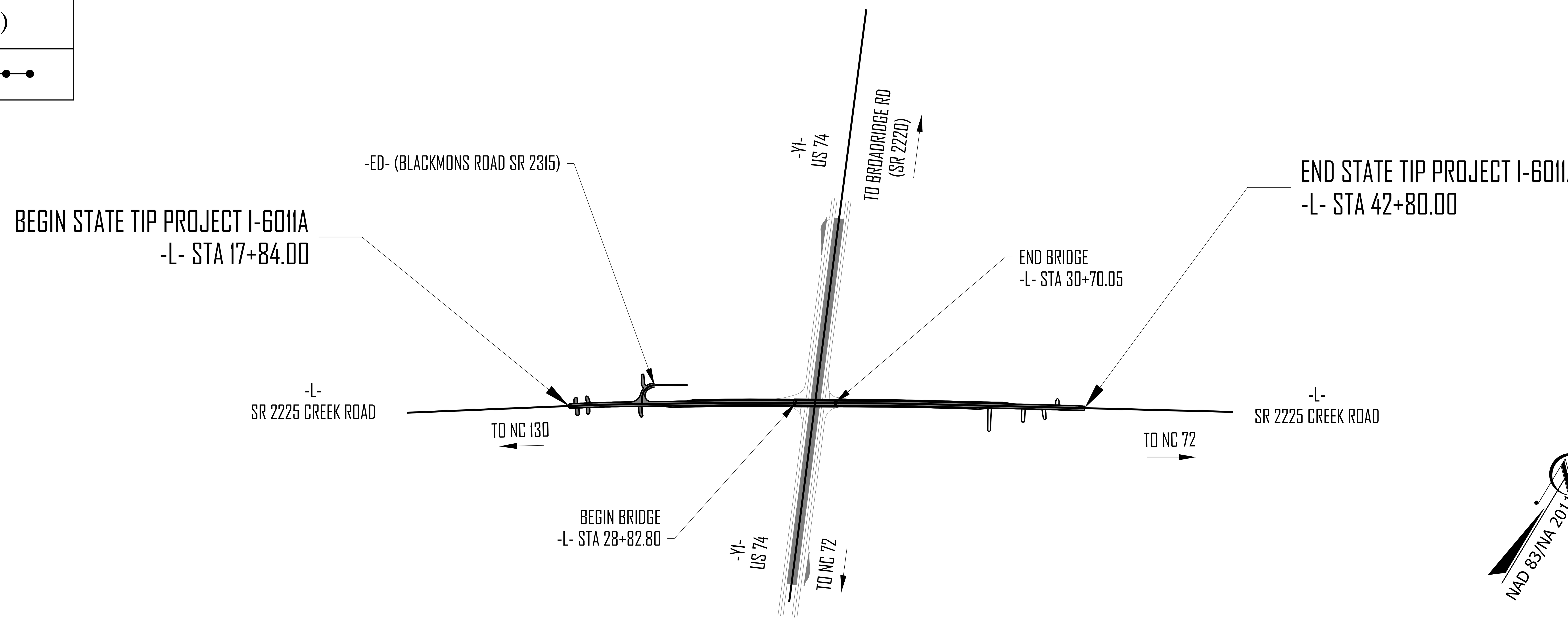

NAD 83/NA 2011

DESIGN DATA

ADT 2027 = 1250
ADT 2047 = 1440
K = 10 %
D = 60 %
T = 3 % *
V = 60 MPH
* TTST =1% DUAL 2%
FUNC CLASS =
LOCAL
SUB-REGIONAL TIER

PROJECT LENGTH

LENGTH ROADWAY PROJECT I-6011A	=	0.438 MILES
LENGTH STRUCTURE PROJECT I-6011A	=	0.035 MILES
TOTAL LENGTH PROJECT I-6011A	=	0.473 MILES

Prepared for NCDOT in the Office of:
moffatt & nichol
4700 FALLS OF NEUSE ROAD, SUITE 300
RALEIGH, NORTH CAROLINA 27609
(919) 781-4626 VOICE (919) 781-4869 FAX
NC License NO.: F-0105

2024 STANDARD SPECIFICATIONS

RIGHT OF WAY DATE:
JANUARY 31, 2025

LETTING DATE:
AUGUST 18, 2026

SANTIAGO AGUILAR, P.E.
PROJECT ENGINEER

SANTIAGO AGUILAR, P.E.
PROJECT STRUCTURAL ENGINEER

DAVID STUTTS, P.E.
NCDOT CONTACT

$$$$SYSTIME$$$$
$$$$$$$$$$$$$$$$$$DGN$$
$$$$USERNAME$$$$

Docusign Envelope ID: B51A3BFD-B61E-8A47-81F7-C89E23847CA8

F.A. PROJECT NO. 4869001

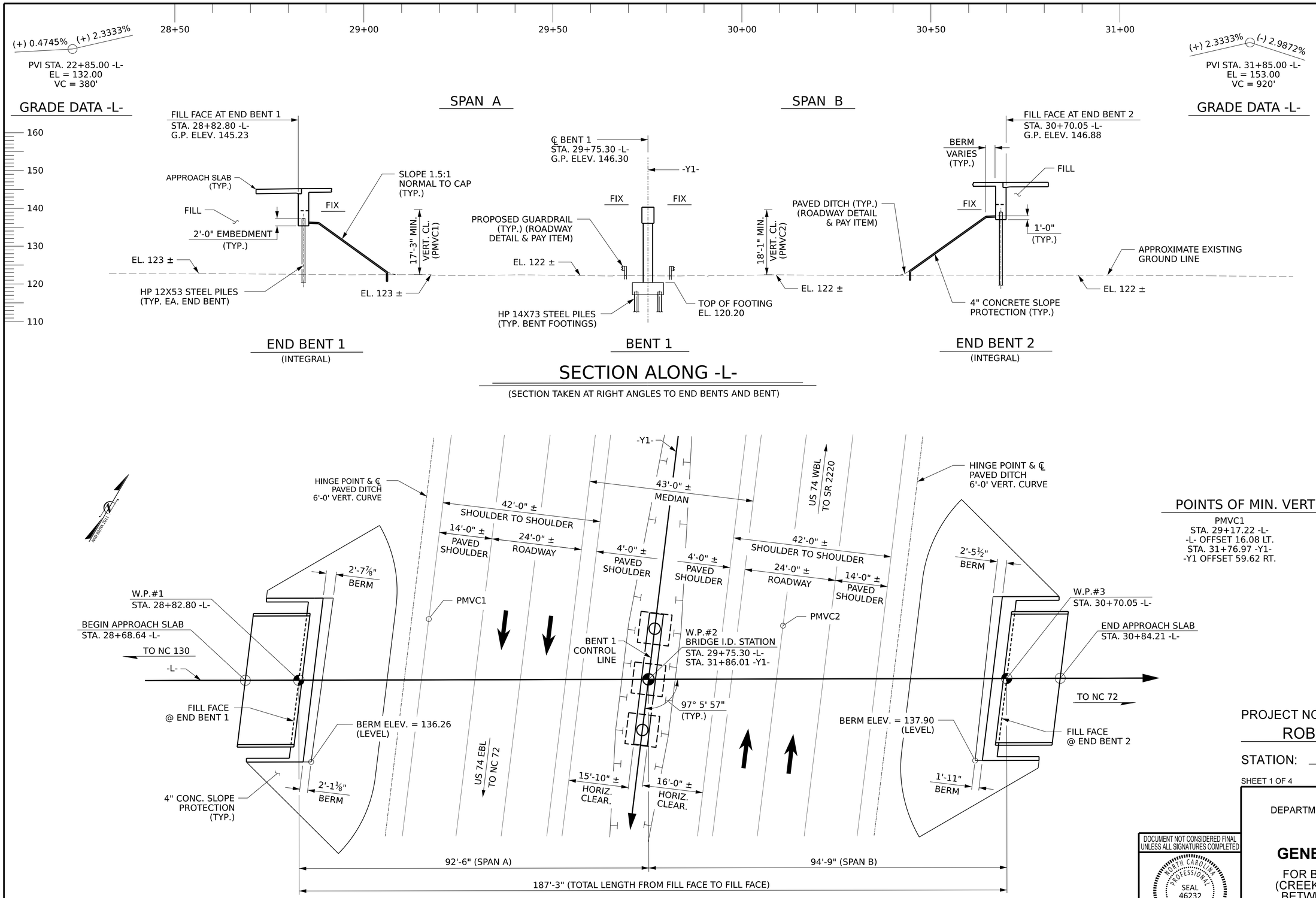

POINTS OF MIN. VERTICAL CLEARANCE

PMVC1	PMVC2
STA. 29+17.22 -L-	STA. 29+99.35 -L-
-L- OFFSET 16.08 LT.	-L- OFFSET 16.08 LT.
STA. 31+76.97 -Y1-	STA. 31+66.82 -Y1-
-Y1 OFFSET 59.62 RT.	-Y1- OFFSET 21.88 LT.

PROJECT NO. I-6011A

ROBESON COUNTY

STATION: 29+75.30 -L-
31+86.01 -Y-

SHEET 1 OF 4

BRIDGE # 770587

STATE OF NORTH CAROLINA
DEPARTMENT OF TRANSPORTATION
RALEIGH

GENERAL DRAWING

FOR BRIDGE ON SR 2225 (CREEK ROAD) OVER US 74 BETWEEN NC 130 & NC 72

DOCUMENT NOT CONSIDERED FINAL UNLESS ALL SIGNATURES COMPLETED

NORTH CAROLINA PROFESSIONAL SEAL 46232 ENGINEER Santiago E. Aguilar

Signed by: Santiago E Aguilar
43B96A78EF64402...
5/14/2026

moffatt & nichol
4700 FALLS OF NEUSE ROAD, SUITE 300
RALEIGH, NORTH CAROLINA 27609
(919) 781-4626 PHONE (919) 781-4869 FAX
NC LICENSE NO.: F-0105

REVISIONS						SHEET NO.
NO.	BY:	DATE:	NO.	BY:	DATE:	S-1
1			3			TOTAL SHEETS
2			4			34

DRAWN BY: T. KIRSCHBAUM DATE: 01/2026
CHECKED BY: P. SHAW DATE: 01/2026
DESIGN ENGINEER OF RECORD: S. AGUILAR DATE: 02/2026

5/13/2026
P:\RA\I11125-0220 CADD\I-6011A\Structures\01-CADD\I-6011A_Print File.dgn
tkirschbaum

Docusign Envelope ID: B51A3BFD-B61E-8A47-81F7-C89E23847CA8

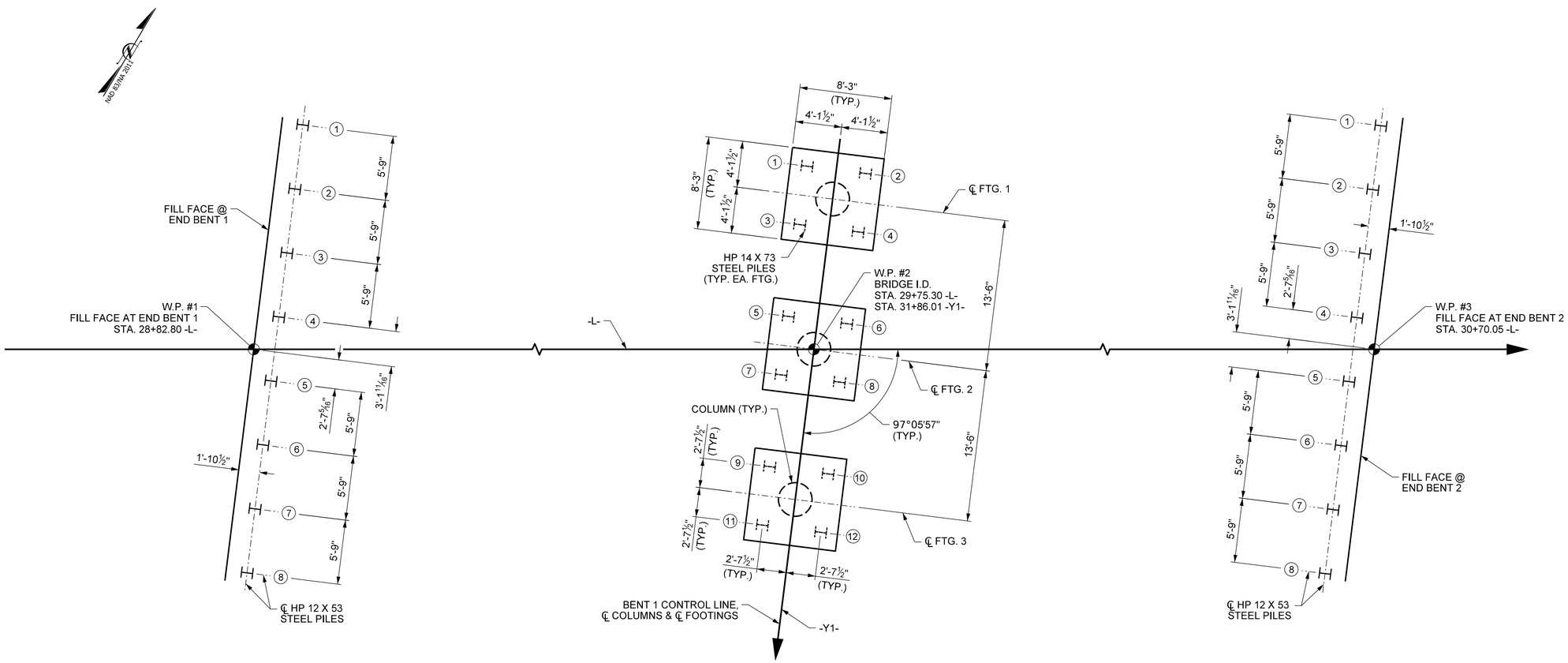

END BENT 1
(INTEGRAL)

BENT 1

END BENT 2
(INTEGRAL)

FOUNDATION LAYOUT

DIMENSIONS LOCATING PILES ARE SHOWN TO CENTERLINE OF PILES.
ORIENT PILES AS SHOWN.

NOTES

1. FOR PILES, SEE SECTION 450 OF THE STANDARD SPECIFICATIONS.
2. SEE ROADWAY PLANS AND SECTION 235 OF THE STANDARD SPECIFICATIONS FOR THE SETTLEMENT GAUGES REQUIRED AT END BENTS NO. 1 AND NO 2.
3. OBSERVE A 2 MONTH WAITING PERIOD AFTER CONSTRUCTING THE EMBANKMENT TO WITHIN 2 FT OF FINISHED GRADE BEFORE BEGINNING END BENT CONSTRUCTION AT END BENTS NO.1 AND NO. 2. FOR BRIDGE WAITING PERIODS, SEE ROADWAY PLANS AND SECTION 235 OF THE STANDARD SPECIFICATIONS.
4. IT HAS BEEN ESTIMATED THAT A HAMMER WITH AND EQUIVALENT RATED ENERGY IN THE RANGE OF 45 TO 75 FT- KIPS PER BLOW WILL BE REQUIRED TO DRIVE PILES AT BENT NO. 1. THIS ESTIMATED ENERGY RANGE DOES NOT RELEASE THE CONTRACTOR FROM PROVIDING DRIVING EQUIPMENT IN ACCORDANCE WITH SUBARTICLE 450-3(D)(2) OF THE STANDARD SPECIFICATIONS.

PROJECT NO. I-6011A
ROBESON COUNTY
STATION: 29+75.30 -L-

SHEET 2 OF 4

STATE OF NORTH CAROLINA
DEPARTMENT OF TRANSPORTATION
RALEIGH

FOUNDATION LAYOUT

DRAWN BY :	T. KIRSCHBAUM	DATE : 01/2026
CHECKED BY :	P. SHAW	DATE : 01/2026
DESIGN ENGINEER OF RECORD:	S. AGUILAR	DATE : 02/2026

moffatt & nichol
4700 FALLS OF NEUSE ROAD, SUITE 300
RALEIGH, NORTH CAROLINA 27609
(919) 781-4626 VOICE (919) 781-4869 FAX
NC LICENSE NO.: F-0105

DOCUMENT NOT CONSIDERED FINAL UNLESS ALL SIGNATURES COMPLETED

NORTH CAROLINA PROFESSIONAL SEAL 46232 ENGINEER Santiago E. Aguilar

Signed by: Santiago E Aguilar
43B96A78EF64402...
5/14/2026

REVISIONS

NO.	BY:	DATE:	NO.	BY:	DATE:
1			3		
2			4		

SHEET NO. S-2
TOTAL SHEETS 34

5/13/2026
P:\RA\11125-02\20 CADD\I-6011A\Structures\01-CADD\I-6011A_Print File.dgn
tkirschbaum

Docusign Envelope ID: B51A3BFD-B61E-8A47-81F7-C89E23847CA8

SUMMARY OF PILE INFORMATION/INSTALLATION

(Blank entries indicate item is not applicable to structure)

End Bent / Bent No, Pile(s) #(-#) (e.g., "Bent 1, Piles 1-5")	Number of Piles per Line	Factored Resistance per Pile KIPS	Pile Cut-Off (Top of Pile) Elevation FT	Estimated Pile Length per Pile FT	Scour Critical Elevation FT	Driven Piles			Predrilling for Piles **			Drilled-In Piles		
						Minimum Pile Tip (Tip No Higher Than) Elevation FT	Required Driving Resistance (RDR)* per pile KIPS	Pile Redrives Quantity EACH	Predrilling Length per Pile LIN FT	Predrilling Elevation (Elevation Not To Predrill Below) FT	Maximum Predrilling Diameter INCHES	Pile Excavation (Bottom of Hole) Elevation FT	Pile Excavation Not In Soil per Pile LIN FT	Pile Excavation In Soil per Pile LIN FT
End Bent No. 1, Piles 1-8	8	215	137.26	80			360	4						
Bent No. 1, Piles 1-12	12	270	117.70	85			450	6						
End Bent No. 2, Piles 1-8	8	215	138.90	80			360	4						
TOTAL QUANTITY:								14						

$$^{*}\,RDR = \frac{Factored\ Resistance + Factored\ Drag\ Load + Factored\ Dead\ Load}{Dynamic\ Resistance\ Factor} + Nominal\ Drag\ Load\ Resistance + Nominal\ Resistance\ from\ Scourable\ Material$$

** Predrilling for Piles is required for end bents/bents with a predrilling length and at the Contractor's option for end bents/bents with predrilling information but no predrilling length.

PILE DESIGN INFORMATION

(Blank entries indicate item is not applicable to structure)

End Bent / Bent No, Pile(s) #(-#) (e.g., "Bent 1, Piles 1-5")	Factored Axial Load per Pile KIPS	Factored Drag Load per Pile KIPS	Factored Dead Load * per Pile KIPS	Dynamic Resistance Factor	Nominal Drag Resistance per Pile KIPS	Nominal Scour Resistance per Pile KIPS
End Bent No. 1, Piles 1-6	215			0.60		
Bent No. 1, Piles 1-12	270			0.60		
End Bent No. 2, Piles 1-6	215			0.60		

* Factored Dead Load is factored weight of pile above the ground line.

SUMMARY OF DPT/PILE ORDER LENGTHS

(Blank entries indicate item is not applicable to structure)

Dynamic Pile Testing (DPT)		
End Bent / Bent No (e.g., "Bent 1 - Bent 3")	DPT Test Pile Length FT	DPT Testing Quantity EACH
End Bent No. 1	85	1
Bent No. 1	90	
End Bent No. 2	85	
TOTAL QUANTITY:		1

Pile Order Lengths for Concrete Piles	
End Bent / Bent No (e.g., "Bent 1 - Bent 3")	Pile Order Length Basis* EST or DPT

* EST = Pile order lengths from estimated pile lengths; DPT = Pile order lengths based on Dynamic Pile Testing. For groups of end bents/bents with pile order lengths based on DPT testing, the first end bent/bent no. listed for each group is the representative end bent/bent with the DPT.

PROJECT NO. I-6011A

Robeson COUNTY

STATION: 29+75.30 -L-

SHEET 3 OF 4

NOTES:

1. The Pile Foundation Tables are based on the bridge substructure design and foundation recommendations sealed by a North Carolina Professional Engineer (Stephen C. Crockett, #048207) on 05-14-2026.
2. Total Pile Driving Equipment Setup quantity (not shown in Pile Foundation Tables) equals the number of driven piles, i.e., the number of piles with a Required Driving Resistance.
3. The Engineer may adjust the quantity for DPT Testing and Pipe Pile Plates when necessary.

NORTH CAROLINA PROFESSIONAL SEAL 46232 ENGINEER Santiago E. Aguilar

Signed by: Santiago E Aguilar 43B96A78EF64402...

5/14/2026

SIGNATURE DATE

DOCUMENT NOT CONSIDERED FINAL UNLESS ALL SIGNATURES COMPLETED

STATE OF NORTH CAROLINA
DEPARTMENT OF TRANSPORTATION
RALEIGH

PILE FOUNDATION TABLES

REVISIONS						SHEET NO.
NO.	BY:	DATE:	NO.	BY:	DATE:	S-3
1			3			TOTAL SHEETS
2			4			34

Docusign Envelope ID: B51A3BFD-B61E-8A47-81F7-C89E23847CA8

BM #3: STA. 30+84.00 -L-, 237' RT, EL. = 119.37; RAILROAD SPIKE IN BASE OF 30" PINE TREE

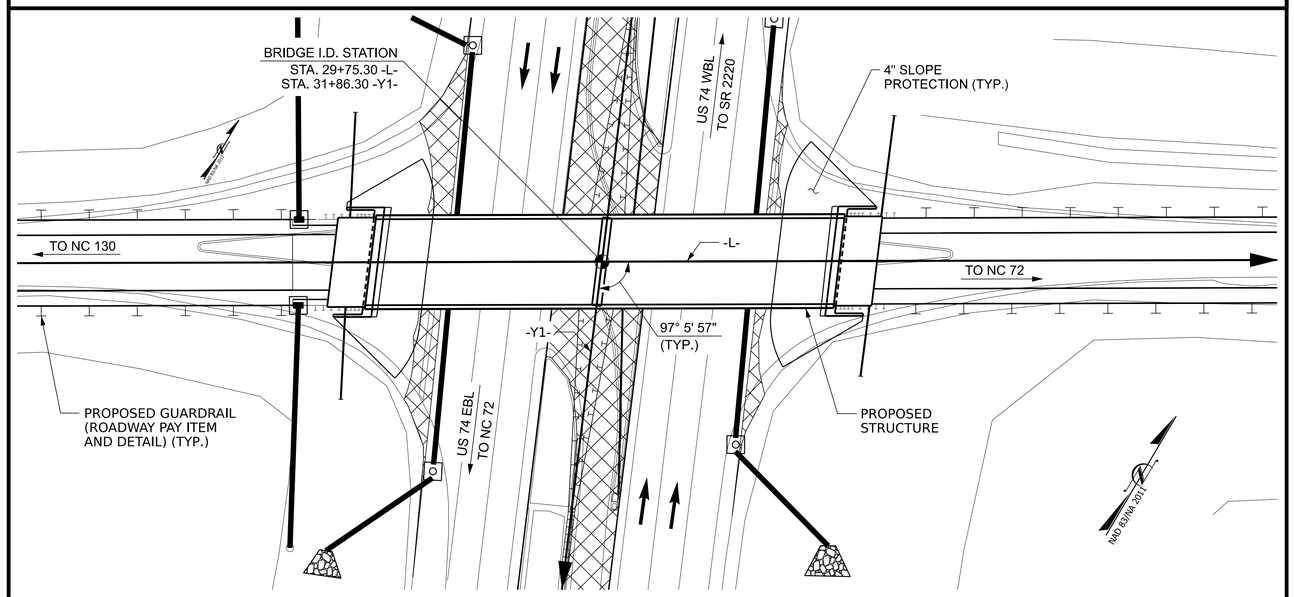

LOCATION SKETCH

FOR UTILITY INFORMATION, SEE UTILITY PLANS AND SPECIAL PROVISIONS

NOTES

ASSUMED LIVE LOAD = HL-93 OR ALTERNATE LOADING.

THIS BRIDGE HAS BEEN DESIGNED IN ACCORDANCE WITH THE AASHTO LRFD BRIDGE DESIGN SPECIFICATIONS.

FOR OTHER DESIGN DATA AND GENERAL NOTES, SEE SHEET SN.

THIS BRIDGE IS LOCATED IN SEISMIC ZONE 2.

FOR SUBMITTAL OF WORKING DRAWINGS, SEE SPECIAL PROVISIONS.

FOR FALSEWORK AND FORMWORK, SEE SPECIAL PROVISIONS.

FOR CRANE SAFETY, SEE SPECIAL PROVISIONS.

FOR GROUT FOR STRUCTURES, SEE SPECIAL PROVISIONS.

FOR FOUNDATION NOTES, SEE "FOUNDATION LAYOUT" SHEET.

THE ELEVATIONS AND CLEARANCES SHOWN ON THE PLANS AT THE POINTS OF MINIMUM VERTICAL CLEARANCE ARE FROM THE BEST INFORMATION AVAILABLE. PRIOR TO BRIDGE CONSTRUCTION, VERIFY THE ELEVATIONS ON THE EXISTING PAVEMENT AND CHECK THE CLEARANCE. REPORT ANY VARIATIONS TO THE ENGINEER. ANY PLAN REVISIONS NECESSARY TO ACHIEVE THE REQUIRED MINIMUM VERTICAL CLEARANCE WILL BE PROVIDED BY THE DEPARTMENT.

FOR MAINTENANCE AND PROTECTION OF TRAFFIC BENEATH PROPOSED STRUCTURE, SEE SPECIAL PROVISIONS.

NEEDLE BEAMS WILL NOT BE ALLOWED UNLESS OTHERWISE CALLED FOR ON THE PLANS OR APPROVED BY THE ENGINEER.

REMOVABLE FORMS MAY BE USED IN LIEU OF METAL STAY-IN-PLACE FORMS IN ACCORDANCE WITH ARTICLE 420-3 OF THE STANDARD SPECIFICATIONS.

PRESTRESSED CONCRETE DECK PANELS MAY BE USED IN LIEU OF METAL STAY-IN-PLACE FORMS IN ACCORDANCE WITH ARTICLE 420-3 OF THE STANDARD SPECIFICATIONS.

THE CONTRACTOR SHALL PROVIDE INDEPENDENT ASSURANCE SAMPLES OF REINFORCING STEEL AS FOLLOWS: FOR PROJECTS REQUIRING UP TO 400 TONS (360,000 KG) OF REINFORCING STEEL, ONE 30 INCH (760 MM) SAMPLE OF EACH SIZE BAR USED, AND FOR PROJECTS REQUIRING OVER 400 TONS (360,000 KG) OF REINFORCING STEEL, TOW 30 INCH STEEL ACTUALLY USED IN THE PROJECT AND THE SAMPLE BARS SHOULD BE REPLACED BY SPLICED BARS AS SPECIFIED IN THE SAMPLE BAR REPLACEMENT CHART. PAYMENT FOR THE SAMPLE BARS AND REPLACEMENT REINFORCING STEEL SHALL BE CONSIDERED INCIDENTAL TO VARIOUS PAY ITEMS.

FOR EROSION CONTROL MEASURES, SEE EROSION CONTROL PLANS.

TOTAL BILL OF MATERIAL

	FOUNDATION EXCAVATION FOR BENT 1 @ STA. 29+75.30 -L-	REINFORCED CONCRETE DECK SLAB	GROOVING BRIDGE FLOORS	CLASS A CONCRETE	BRIDGE APPROACH SLABS AT STA. 29+75.30 -L-	REINFORCING STEEL	SPIRAL COLUMN REINFORCING STEEL	54" PRESTRESSED CONCRETE GIRDERS		PILE DRIVING EQUIPMENT SETUP FOR HP 12 x 53 STEEL PILES	PILE DRIVING EQUIPMENT SETUP FOR HP 14 x 73 STEEL PILES	HP 12 X 53 STEEL PILES		HP 14 X 73 STEEL PILES		PILE REDRIVES	DYNAMIC PILE TESTING	CONCRETE BARRIER RAIL	4" SLOPE PROTECTION	ELASTOMERIC BEARINGS
	LUMP SUM	SQ. FT.	SQ. FT.	CU. YDS.	LUMP SUM	LBS.	LBS.	No.	LIN. FT.	No.	No.	No.	LIN. FT.	No.	LIN. FT.	EA.	EA.	LIN. FT.	SQ. YDS.	LUMP SUM
SUPERSTRUCTURE		6,913	6,652		LUMP SUM			8	736.3									371.14		LUMP SUM
END BENT 1				34.4		5,157				8		8	640			4			248	
BENT 1	LUMP SUM			57.7		10,168	2,020				12			12	1,020	6				
END BENT 2				34.5		5,157				8		8	640			4			274	
TOTAL	LUMP SUM	6,913	6,652	126.6	LUMP SUM	20,482	2,020	8	736.3	16	12	16	1,280	12	1,020	14	1	371.14	522	LUMP SUM

SAMPLE BAR REPLACEMENT

SIZE	LENGTH
#3	6'-2"
#4	7'-4"
#5	8'-6"
#6	9'-8"
#7	10'-10"
#8	12'-0"
#9	13'-2"
#10	14'-6"
#11	15'-10"

SAMPLE BAR REPLACEMENT FOR FEDERAL AID PROJECTS

NOTE: SAMPLE BAR REPLACEMENT LENGTHS
BASED ON 30" (SAMPLE LENGTH)
PLUS TWO SPLICE LENGTHS AND fy = 60 KSI.

PROJECT NO. I-6011A
ROBESON COUNTY
STATION: 29+75.30 -L-

SHEET 4 OF 4

STATE OF NORTH CAROLINA
DEPARTMENT OF TRANSPORTATION
RALEIGH

GENERAL DRAWING

FOR BRIDGE ON SR 2225
(CREEK ROAD) OVER US 74
BETWEEN NC 130 & NC 72

DOCUMENT NOT CONSIDERED FINAL UNLESS ALL SIGNATURES COMPLETED

NORTH CAROLINA PROFESSIONAL SEAL 46232 ENGINEER Santiago E. Aguilar

Signed by: Santiago E Aguilar
43B96A78EF64402...
5/14/2026

moffatt & nichol
4700 FALLS OF NEUSE ROAD, SUITE 300
RALEIGH, NORTH CAROLINA 27609
(919) 781-4626 VOICE (919) 781-4869 FAX
NC LICENSE NO.: F-0105

REVISIONS						SHEET NO.
NO.	BY:	DATE:	NO.	BY:	DATE:	S-4
1			3			TOTAL SHEETS
2			4			34

DRAWN BY : T. KIRSCHBAUM DATE : 01/2026
CHECKED BY : P. SHAW DATE : 01/2026
DESIGN ENGINEER OF RECORD: S. AGUILAR DATE : 02/2026

5/13/2026
P:\RA\11125-02\20 CADD\I-6011A\Structures\01-CADD\I-6011A_Print File.dgn
tkirschbaum

Docusign Envelope ID: B51A3BFD-B61E-8A47-81F7-C89E23847CA8

LOAD AND RESISTANCE FACTOR RATING (LRFR) SUMMARY FOR PRESTRESSED CONCRETE GIRDERS

LOAD TYPE		VEHICLE	WEIGHT (W) (TONS)	CONTROLLING LOAD RATING (#)	MINIMUM RATING FACTORS (RF)	TONS = W x RF	STRENGTH I LIMIT STATE												SERVICE III LIMIT STATE						COMMENT NUMBER
								MOMENT					SHEAR							MOMENT					
							LIVE-LOAD FACTORS (γ LL)	DISTRIBUTION FACTORS (DF)	RATING FACTOR	SPAN	GIRDER LOCATION	DISTANCE FROM LEFT END OF SPAN (ft)	DISTRIBUTION FACTORS (DF)	RATING FACTOR	SPAN	GIRDER LOCATION	DISTANCE FROM LEFT END OF SPAN (ft)	LIVE-LOAD FACTORS (γ LL)	DISTRIBUTION FACTORS (DF)	RATING FACTOR	SPAN	GIRDER LOCATION	DISTANCE FROM LEFT END OF SPAN (ft)	
DESIGN LOAD		HL-93 (INVENTORY)	N/A	1	1.45	--	1.75	0.86	1.76	B	EL	45.87	0.99	1.45	B	I	83.13	0.80	0.86	1.57	B	EL	45.87	
		HL-93 (OPERATING)	N/A		1.90	--	1.35	0.86	2.29	B	EL	45.87	0.99	1.90	B	I	83.13	N/A	--	--	--	--	--	
		HS-20 (INVENTORY)	36.000	2	1.93	69.480	1.75	0.86	2.42	B	EL	45.87	0.99	1.93	B	I	83.13	0.80	0.86	2.15	B	EL	45.87	
		HS-20 (OPERATING)	36.000		2.53	91.080	1.35	0.86	3.13	B	EL	45.87	0.99	2.53	B	I	83.13	N/A	--	--	--	--	--	
LEGAL LOAD	SINGLE VEHICLE (SV)	SNSH	13.500		5.04	64.040	1.40	0.86	7.09	B	EL	45.87	0.99	6.09	B	I	83.13	0.80	0.86	5.04	B	EL	45.87	
		SNGARBS2	20.000		3.67	73.400	1.40	0.86	5.16	B	EL	45.87	0.99	4.25	B	I	83.13	0.80	0.86	3.67	B	EL	45.87	
		SNAGRIS2	22.000		3.44	75.680	1.40	0.86	4.84	B	EL	45.87	0.99	3.92	B	I	83.13	0.80	0.86	3.44	B	EL	45.87	
		SNCOTTS3	27.250		2.50	68.125	1.40	0.86	3.52	B	EL	45.87	0.99	2.98	B	I	83.13	0.80	0.86	2.50	B	EL	45.87	
		SNAGGRS4	34.925		2.06	71.946	1.40	0.86	2.90	B	EL	45.87	0.99	2.42	B	I	83.13	0.80	0.86	2.06	B	EL	45.87	
		SNS5A	35.550		2.02	71.811	1.40	0.86	2.84	B	EL	45.87	0.99	2.44	B	I	83.13	0.80	0.86	2.02	B	EL	45.87	
		SNS6A	39.950		1.84	73.508	1.40	0.86	2.59	B	EL	45.87	0.99	2.20	B	I	83.13	0.80	0.86	1.84	B	EL	45.87	
		SNS7B	42.000		1.75	73.500	1.40	0.86	2.46	B	EL	45.87	0.99	2.15	B	I	83.13	0.80	0.86	1.75	B	EL	45.87	
	TRUCK TRACTOR SEMI-TRAILER (TTST)	TNAGRIT3	33.000		2.24	73.920	1.40	0.86	3.15	B	EL	45.87	0.99	2.65	B	I	83.13	0.80	0.86	2.24	B	EL	45.87	
		TNT4A	33.075		2.24	74.088	1.40	0.86	3.16	B	EL	45.87	0.99	2.60	B	I	83.13	0.80	0.86	2.24	B	EL	45.87	
		TNT6A	41.600		1.82	75.712	1.40	0.86	2.56	B	EL	45.87	0.99	2.26	B	I	83.13	0.80	0.86	1.82	B	EL	45.87	
		TNT7A	42.000		1.82	76.440	1.40	0.86	2.57	B	EL	45.87	0.99	2.22	B	I	83.13	0.80	0.86	1.82	B	EL	45.87	
		TNT7B	42.000		1.87	78.540	1.40	0.86	2.63	B	EL	45.87	0.99	2.10	B	I	83.13	0.80	0.86	1.87	B	EL	45.87	
		TNAGRIT4	43.000		1.79	76.970	1.40	0.86	2.52	B	EL	45.87	0.99	2.04	B	I	83.13	0.80	0.86	1.79	B	EL	45.87	
		TNAGT5A	45.000		1.69	76.050	1.40	0.86	2.39	B	EL	45.87	0.99	2.01	B	I	83.13	0.80	0.86	1.69	B	EL	45.87	
		TNAGT5B	45.000	3	1.68	75.600	1.40	0.86	2.36	B	EL	45.87	0.99	1.94	B	I	83.13	0.80	0.86	1.68	B	EL	45.87	
EMERGENCY VEHICLE (EV)		EV2	28.750		2.58	74.175	1.30	0.86	3.92	B	EL	45.87	0.99	3.18	B	I	83.13	0.80	0.86	2.58	B	EL	45.87	
		EV3	43.000	4	1.70	73.100	1.30	0.86	2.58	B	EL	45.87	0.99	2.11	B	I	83.13	0.80	0.86	1.70	B	EL	45.87	

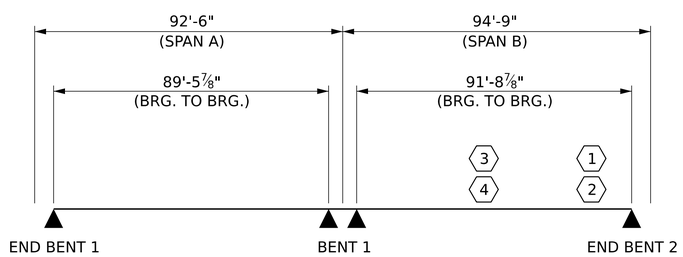

LRFR SUMMARY

LOAD FACTORS:

DESIGN LOAD RATING FACTORS	LIMIT STATE	γDC	γDW
	STRENGTH I	1.25	1.50
	SERVICE III	1.00	1.00

NOTES:

MINIMUM RATING FACTORS ARE BASED ON THE STRENGTH I AND SERVICE III LIMIT STATES.

ALLOWABLE STRESSES FOR SERVICE III LIMIT STATE ARE AS REQUIRED FOR DESIGN.

COMMENTS:

1.
2.
3.
4.

(#) CONTROLLING LOAD RATING

(1) DESIGN LOAD RATING (HL-93)
(2) DESIGN LOAD RATING (HS-20)
(3) LEGAL LOAD RATING * *
(4) EMERGENCY VEHICLE LOAD RATING **
* * SEE CHART FOR VEHICLE TYPE

GIRDER LOCATION

I - INTERIOR GIRDER
EL - EXTERIOR LEFT GIRDER
ER - EXTERIOR RIGHT GIRDER

PROJECT NO. I-6011A
ROBESON COUNTY
STATION: 29+75.30 -L-

STATE OF NORTH CAROLINA
DEPARTMENT OF TRANSPORTATION
RALEIGH

SUPERSTRUCTURE
LRFR SUMMARY FOR PRESTRESSED CONCRETE GIRDERS
(NON-INTERSTATE TRAFFIC)

DOCUMENT NOT CONSIDERED FINAL UNLESS ALL SIGNATURES COMPLETED

NORTH CAROLINA PROFESSIONAL SEAL 46232 ENGINEER Santiago E. Aguilar
Signed by: Santiago E Aguilar
43B96A78BF64402...
5/14/2026

moffatt & nichol
4700 FALLS OF NEUSE ROAD, SUITE 300
RALEIGH, NORTH CAROLINA 27609
(919) 781-4626 FAX: (919) 781-4869 FAX
NC LICENSE NO.: F-0105

REVISIONS						SHEET NO.
NO.	BY:	DATE:	NO.	BY:	DATE:	S-5
1			3			TOTAL SHEETS
2			4			34

ASSEMBLED BY: T. KIRSCHBAUM DATE: 01/2026
CHECKED BY: P. SHAW DATE: 01/2026
DRAWN BY: MAA 1/08
CHECKED BY: GM/DI 2/08
REV. 11/12/08RR MAA/GM
REV. 10/1/11 MAA/GM
REV. 04/23 BNB/AAI

STD. NO. LRFR1

5/13/2026
P:\RA\11125-0220 CADD\I-6011A\Structures\01-CADD\I-6011A_Print File.dgn
tkirschbaum

Docusign Envelope ID: B51A3BFD-B61E-8A47-81F7-C89E23847CA8

NOTES

PROVIDE 1¼" HIGH BEAM BOLSTERS UPPER AT 4'-0" CTS. ATOP THE METAL STAY-IN-PLACE FORMS TO SUPPORT THE BOTTOM MAT OF "A" BARS WHEN USING REMOVABLE FORMS. PROVIDE CONTINUOUS HIGH CHAIRS FOR METAL DECK (C.H.C.M.) @ 4'-0" CTS. WITH A HEIGHT TO SUPPORT THE BOTTOM MAT OF "A" BARS A CLEAR DISTANCE OF 2½" ABOVE THE TOP OF THE REMOVABLE FORM.

LONGITUDINAL STEEL MAY BE SHIFTED SLIGHTLY, AS NECESSARY TO AVOID INTERFERENCE WITH STIRRUPS IN PRESTRESSED CONCRETE GIRDERS.

PREVIOUSLY CAST CONCRETE IN A CONTINUOUS UNIT SHALL HAVE ATTAINED A MINIMUM COMPRESSIVE STRENGTH OF 3,000 PSI. BEFORE ADDITIONAL CONCRETE IS CAST IN THE UNIT.

BARRIER RAIL IN A CONTINUOUS UNIT SHALL NOT BE CAST UNTIL ALL SLAB CONCRETE IN THE UNIT HAS BEEN CAST AND HAS REACHED A MINIMUM COMPRESSIVE STRENGTH OF 3,000 PSI.

FOR BARRIER RAIL DETAILS AND REINFORCEMENT, SEE "CONCRETE BARRIER RAIL" SHEETS.

FOR ADDITIONAL INFORMATION OF DECK SLAB REINFORCEMENT, SEE "PLAN OF SPAN" SHEETS.

** FOR INTERMEDIATE STEEL DIAPHRAGM DETAILS, SEE "INTERMEDIATE STEEL DIAPHRAGMS FOR AASHTO TYPE IV PRESTRESSED GIRDERS" SHEET

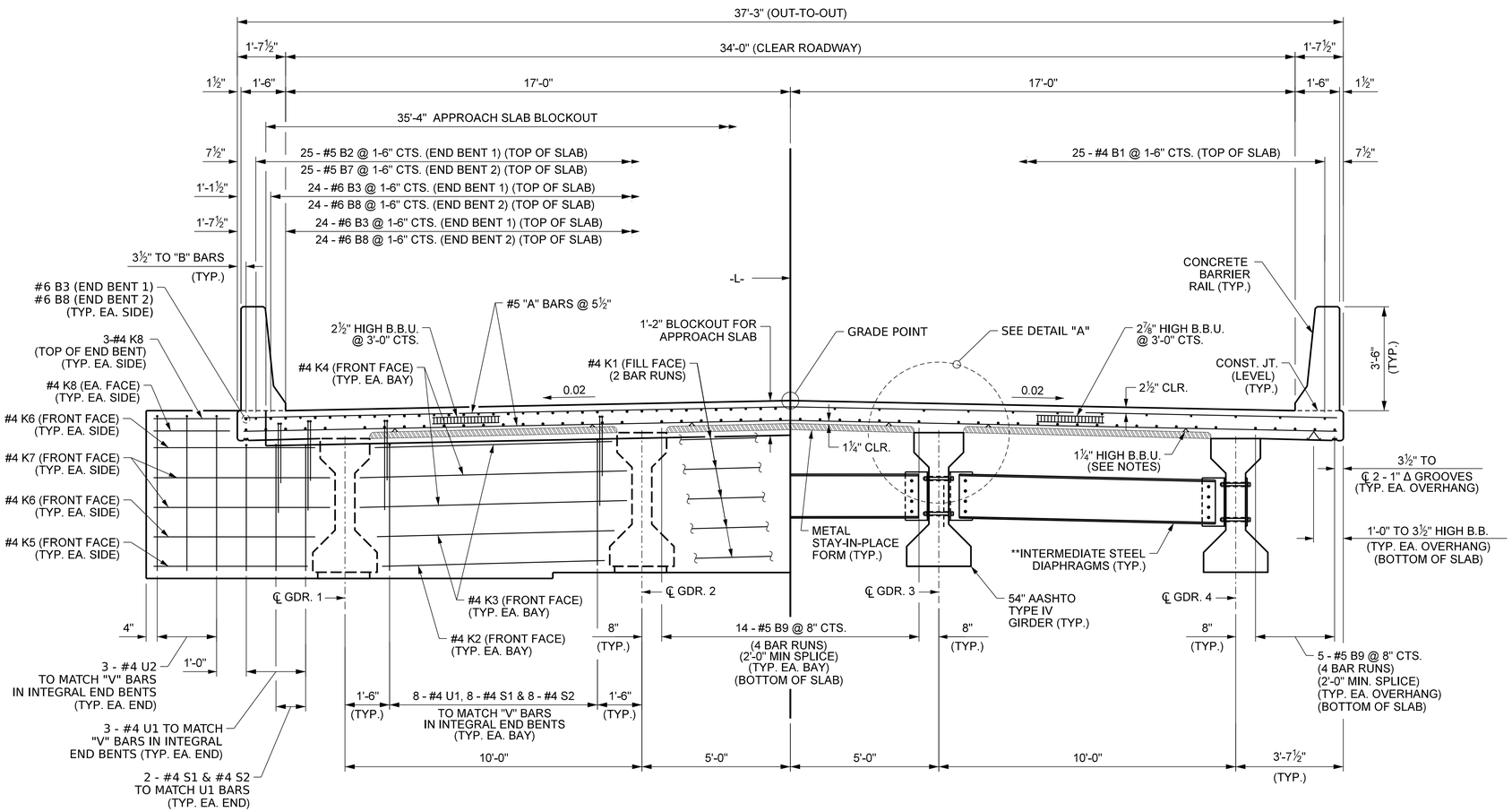

HALF SECTION AT INTEGRAL END BENT

HALF SECTION AT INTERMEDIATE DIAPHRAGM

TYPICAL SECTION

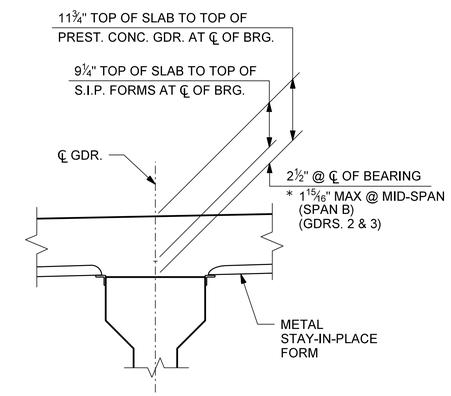

DETAIL "A"

* BASED ON PREDICTED FINAL CAMBER AND THEORETICAL GRADE LINE ELEVATIONS

PROJECT NO. I-6011A

ROBESON COUNTY

STATION: 29+75.30 -L-

SHEET 1 OF 3

STATE OF NORTH CAROLINA
DEPARTMENT OF TRANSPORTATION
RALEIGH

SUPERSTRUCTURE

TYPICAL SECTION

DOCUMENT NOT CONSIDERED FINAL UNLESS ALL SIGNATURES COMPLETED

NORTH CAROLINA PROFESSIONAL SEAL 46232 ENGINEER Santiago E. Aguilar

Signed by: Santiago E Aguilar
43B96A78BF64402...
5/14/2026

moffatt & nichol
4700 FALLS OF NEUSE ROAD, SUITE 300
RALEIGH, NORTH CAROLINA 27609
(919) 781-4626 VOICE (919) 781-4869 FAX
NC LICENSE NO.: F-0105

REVISIONS									SHEET NO.
NO.	BY:	DATE:	NO.	BY:	DATE:				S-6
1			3						TOTAL SHEETS
2			4						34

DRAWN BY: T. KIRSCHBAUM DATE: 01/2026
CHECKED BY: P. SHAW DATE: 01/2026
DESIGN ENGINEER OF RECORD: S. AGUILAR DATE: 02/2026

5/13/2026
P:\RA\11125-02\20 CADD\I-6011A\Structures\01-CADD\I-6011A_Print File.dgn
tkirschbaum

Docusign Envelope ID: B51A3BFD-B61E-8A47-81F7-C89E23847CA8

NOTES

FOR NOTES, SEE SHEET 1 OF 3.

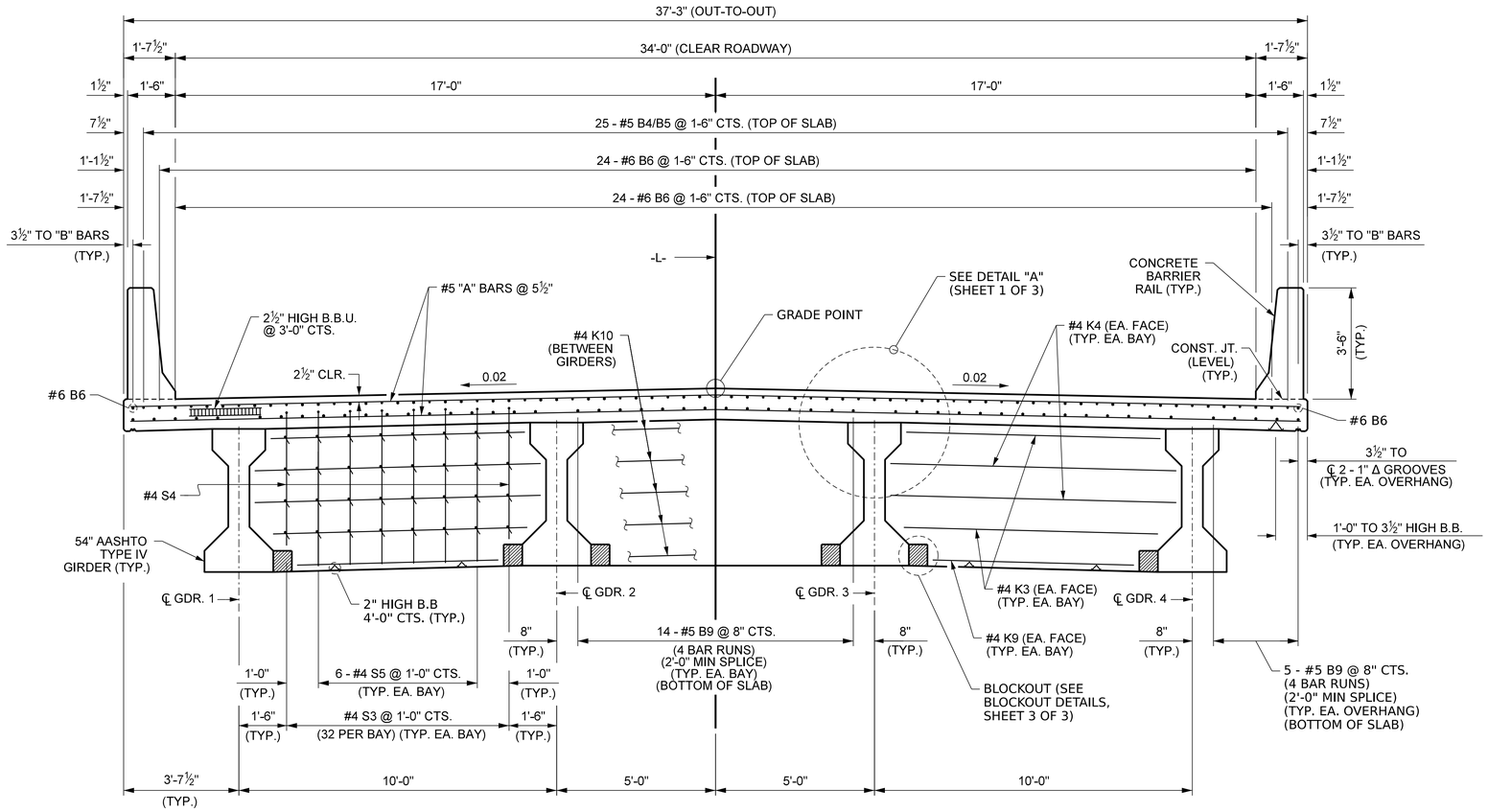

TYPICAL SECTION AT BENT

PROJECT NO. I-6011A

ROBESON COUNTY

STATION: 29+75.30 -L-

SHEET 2 OF 3

STATE OF NORTH CAROLINA
DEPARTMENT OF TRANSPORTATION
RALEIGH

SUPERSTRUCTURE

TYPICAL SECTION

DOCUMENT NOT CONSIDERED FINAL UNLESS ALL SIGNATURES COMPLETED

NORTH CAROLINA PROFESSIONAL SEAL 46232 ENGINEER Santiago E. Aguilar

Signed by: Santiago E Aguilar
43B96A78EF64402...
5/14/2026

moffatt & nichol
4700 FALLS OF NEUSE ROAD, SUITE 300
RALEIGH, NORTH CAROLINA 27609
(919) 781-4626 VOICE (919) 781-4869 FAX
NC LICENSE NO.: F-0105

REVISIONS						SHEET NO.
NO.	BY:	DATE:	NO.	BY:	DATE:	S-7
1			3			TOTAL SHEETS
2			4			34

DRAWN BY :	T. KIRSCHBAUM	DATE :	01/2026
CHECKED BY :	P. SHAW	DATE :	01/2026
DESIGN ENGINEER OF RECORD:	S. AGUILAR	DATE :	02/2026

5/13/2026
P:\RA\11125-02020 CADD\I-6011A\Structures\01-CADD\I-6011A_Print File.dgn
tkirschbaum

Docusign Envelope ID: B51A3BFD-B61E-8A47-81F7-C89E23847CA8

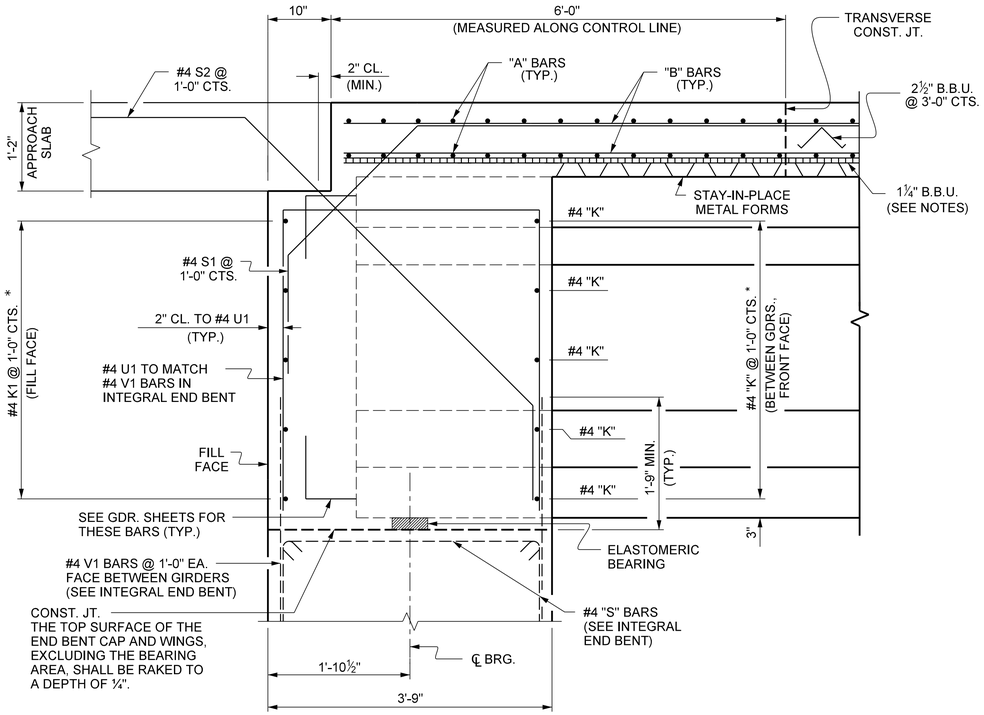

SECTION THRU INTEGRAL END BENT DIAPHRAGM

* 1'-0" CTS. IS MAX. SPACING
END BENT #1 SHOWN, END BENT #2 SIMILAR

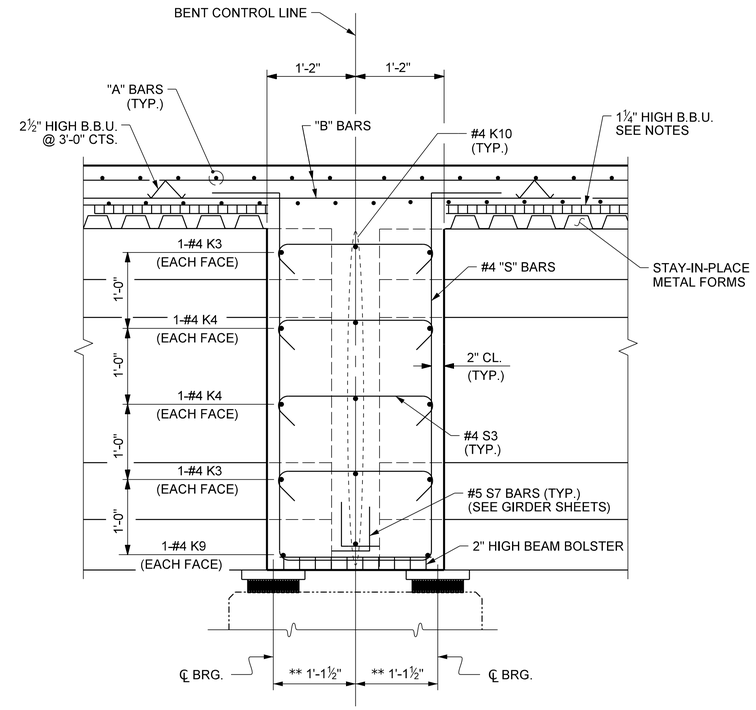

SECTION AT BENT DIAPHRAGM

** MEASURED ALONG ℄ GIRDER

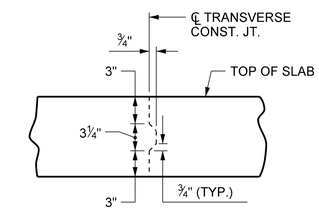

TRANSVERSE CONSTRUCTION JOINT DETAIL

NOTE: REINFORCING STEEL IN SLAB NOT SHOWN. LONGITUDINAL REINFORCING STEEL SHALL BE CONTINUOUS THRU JOINT

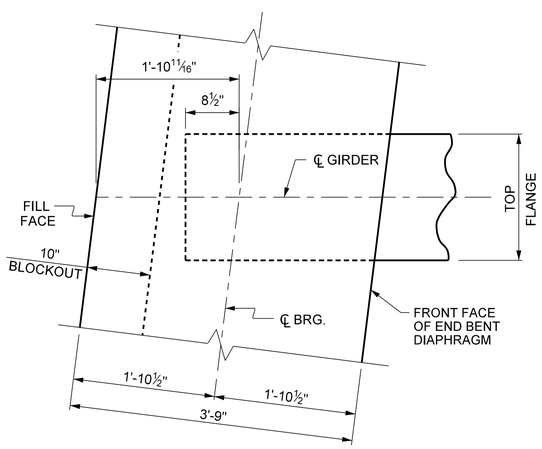

PLAN @ END BENT

END BENT #1 SHOWN, END BENT #2 SIMILAR

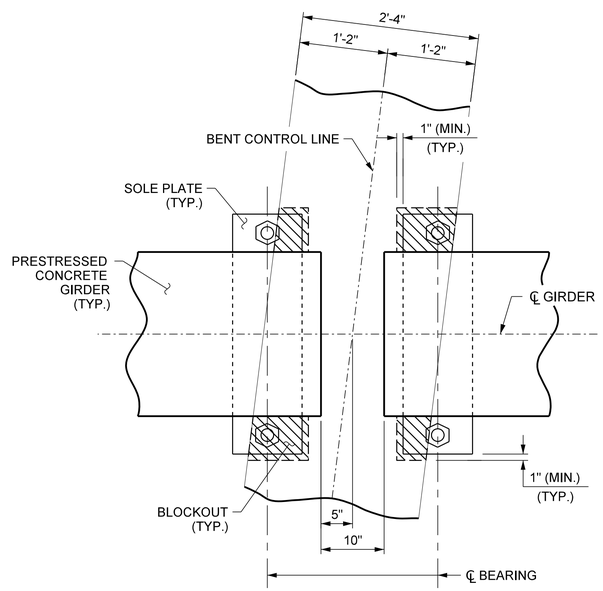

PLAN

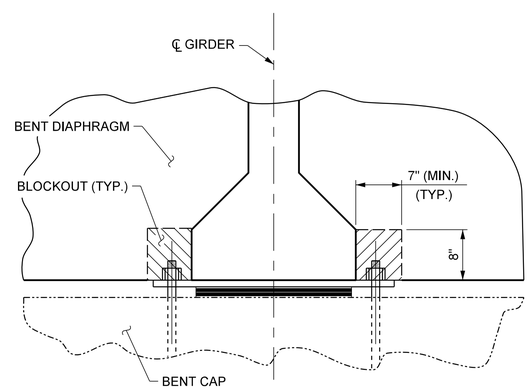

SECTION

BENT DIAPHRAGM BLOCK-OUT DETAIL

PROJECT NO. I-6011A
ROBESON COUNTY
STATION: 29+75.30 -L-

SHEET 3 OF 3

STATE OF NORTH CAROLINA
DEPARTMENT OF TRANSPORTATION
RALEIGH

SUPERSTRUCTURE

TYPICAL SECTION DETAILS

DOCUMENT NOT CONSIDERED FINAL UNLESS ALL SIGNATURES COMPLETED

NORTH CAROLINA PROFESSIONAL SEAL 46232 ENGINEER Santiago E. Aguilar

Signed by: Santiago E Aguilar
43B96A78EF64402...
5/14/2026

moffatt & nichol
4700 FALLS OF NEUSE ROAD, SUITE 300
RALEIGH, NORTH CAROLINA 27609
(919) 781-4626 VOICE (919) 781-4869 FAX
NC LICENSE NO.: F-0105

REVISIONS									SHEET NO.
NO.	BY:	DATE:	NO.	BY:	DATE:				S-8
1			3						TOTAL SHEETS
2			4						34

DRAWN BY :	T. KIRSCHBAUM	DATE :	01/2026
CHECKED BY :	P. SHAW	DATE :	01/2026
DESIGN ENGINEER OF RECORD:	S. AGUILAR	DATE :	02/2026

5/13/2026
P:\RA\11125-02\20 CADD\I-6011A\Structures\01-CADD\I-6011A_Print File.dgn
tkirschbaum

Docusign Envelope ID: B51A3BFD-B61E-8A47-81F7-C89E23847CA8

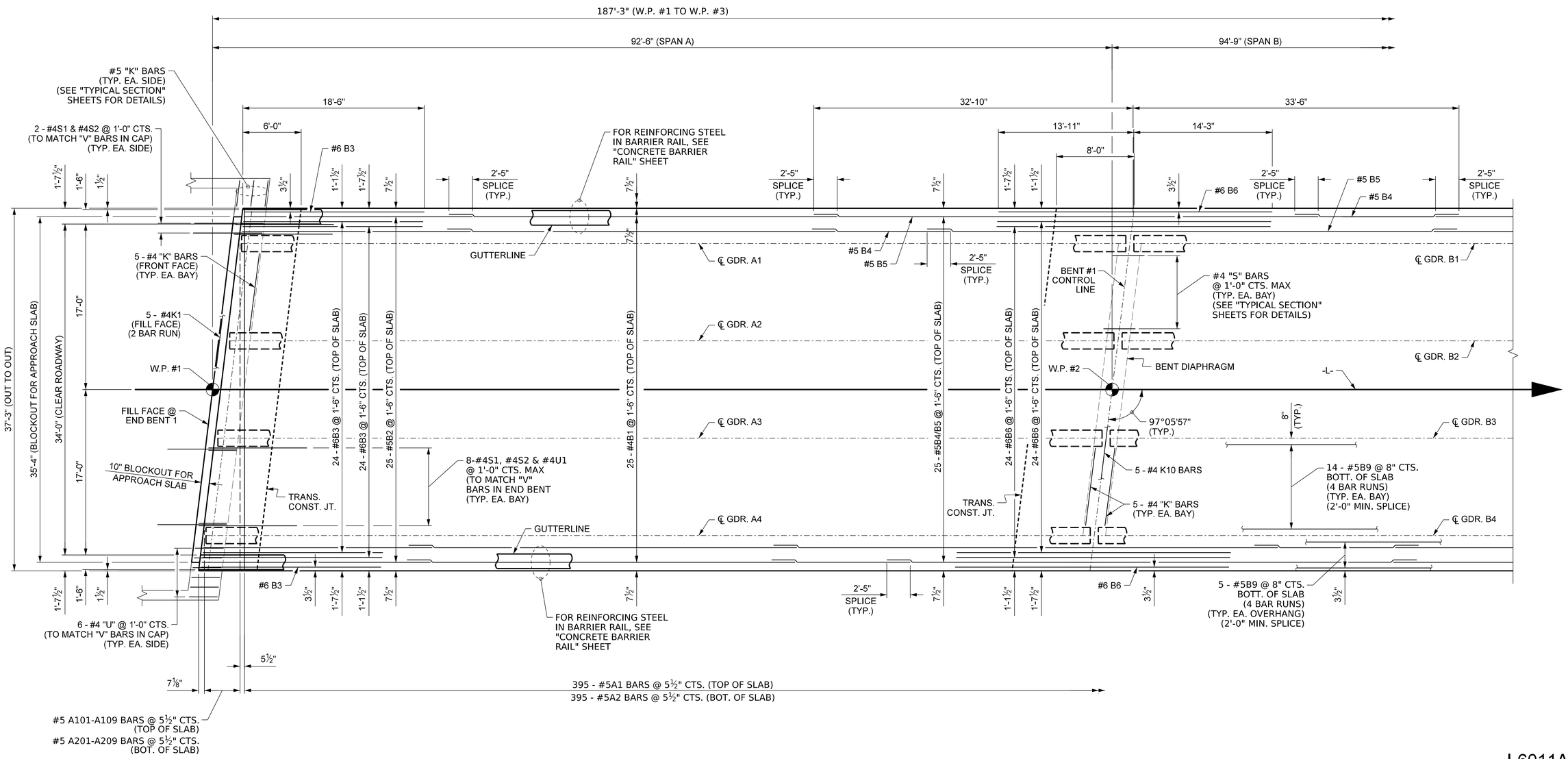

PLAN OF SPAN A

PROJECT NO. I-6011A

ROBESON COUNTY

STATION: 29+75.30 -L-

SHEET 1 OF 2

NOTES

STEEL INTERMEDIATE DIAPHRAGMS NOT SHOWN FOR CLARITY. FOR LOCATIONS, SEE "FRAMING PLAN" SHEET.

DOCUMENT NOT CONSIDERED FINAL UNLESS ALL SIGNATURES COMPLETED

NORTH CAROLINA PROFESSIONAL SEAL 46232 ENGINEER Santiago E. Aguilar

Signed by: Santiago E Aguilar 43B96A78EF64402...

5/14/2026

moffatt & nichol
4700 FALLS OF NEUSE ROAD, SUITE 300
RALEIGH, NORTH CAROLINA 27609
(919) 781-4626 VOICE (919) 781-4869 FAX
NC LICENSE NO.: F-0105

STATE OF NORTH CAROLINA
DEPARTMENT OF TRANSPORTATION
RALEIGH

SUPERSTRUCTURE

PLAN OF SPAN A

REVISIONS						SHEET NO.
NO.	BY:	DATE:	NO.	BY:	DATE:	S-9
1			3			TOTAL SHEETS
2			4			34

DRAWN BY :	T. KIRSCHBAUM	DATE :	01/2026
CHECKED BY :	P. SHAW	DATE :	01/2026
DESIGN ENGINEER OF RECORD:	S. AGUILAR	DATE :	02/2026

5/13/2026
P:\RA\11125-0200 CADD\I-6011A\Structures\01-CADD\I-6011A_Print File.dgn
tkirschbaum

Docusign Envelope ID: B51A3BFD-B61E-8A47-81F7-C89E23847CA8

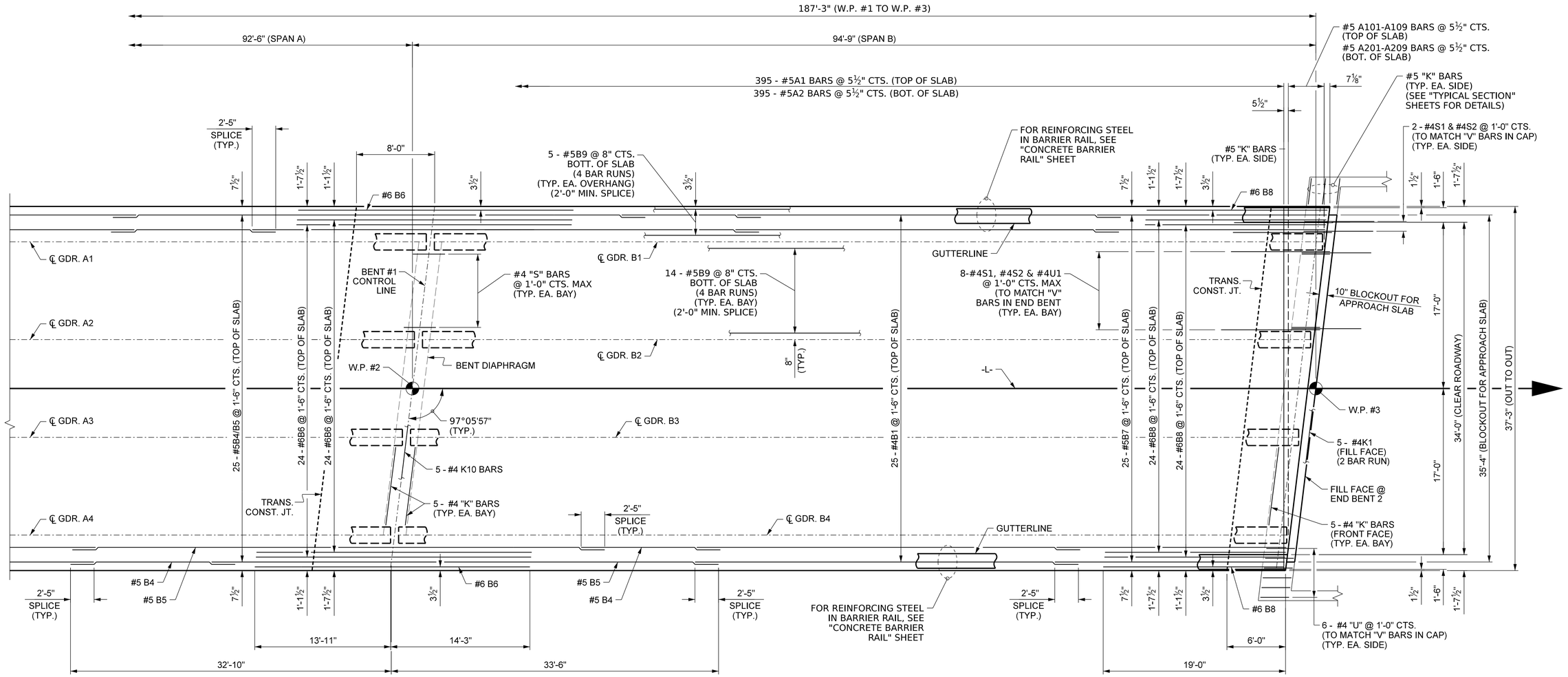

PLAN OF SPAN B

PROJECT NO. I-6011A

ROBESON COUNTY

STATION: 29+75.30 -L-

SHEET 2 OF 2

NOTES

STEEL INTERMEDIATE DIAPHRAGMS NOT SHOWN FOR CLARITY.
FOR LOCATIONS, SEE "FRAMING PLAN" SHEET.

DOCUMENT NOT CONSIDERED FINAL UNLESS ALL SIGNATURES COMPLETED

NORTH CAROLINA PROFESSIONAL SEAL 46232 ENGINEER Santiago E. Aguilar

Signed by: Santiago E Aguilar
438968A7BEF64402...
5/14/2026

moffatt & nichol
4700 FALLS OF NEUSE ROAD, SUITE 300
RALEIGH, NORTH CAROLINA 27609
(919) 781-4626 VOICE (919) 781-4869 FAX
NC LICENSE NO.: F-0105

STATE OF NORTH CAROLINA
DEPARTMENT OF TRANSPORTATION
RALEIGH

SUPERSTRUCTURE

PLAN OF SPAN B

REVISIONS									SHEET NO.
NO.	BY:	DATE:	NO.	BY:	DATE:				S-10
1			3						TOTAL SHEETS
2			4						34

DRAWN BY :	T. KIRSCHBAUM	DATE :	01/2026
CHECKED BY :	P. SHAW	DATE :	01/2026
DESIGN ENGINEER OF RECORD:	S. AGUILAR	DATE :	02/2026

5/13/2026
P:\RA\11125-02\20 CADD\I-6011A\Structures\01-CADD\I-6011A_Print File.dgn
tkirschbaum

Docusign Envelope ID: B51A3BFD-B61E-8A47-81F7-C89E23847CA8

NOTES

** THE SECTION AT WINGWALLS ABOVE THE HORIZONTAL CONSTRUCTION JOINT SHALL BE CLASS A CONCRETE AND CAST SEPARATE FROM THE END BENT DIAPHRAGM AND END SECTION OF BRIDGE DECK NEAR THE INTEGRAL END BENT.

THE QUANTITIES FOR "H" BARS AND CLASS A CONCRETE IN WINGWALLS ABOVE THE HORIZONTAL CONSTRUCTION JOINTS ARE INCLUDED IN THE END BENT BILL OF MATERIALS.

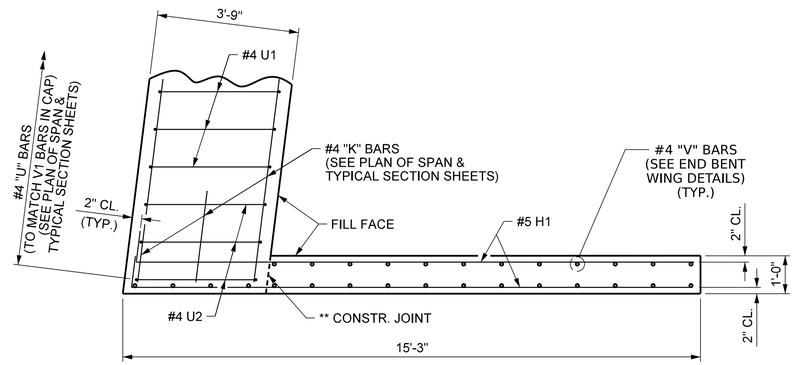

PLAN OF WING (W1)

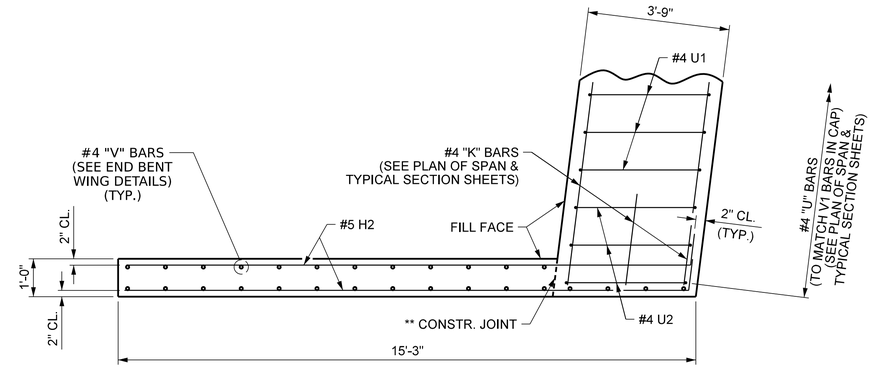

PLAN OF WING (W2)

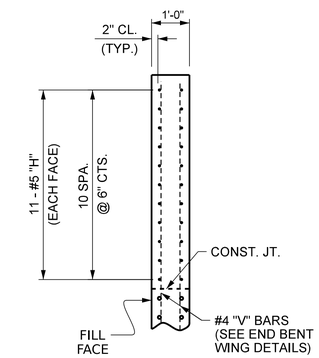

SECTION X-X

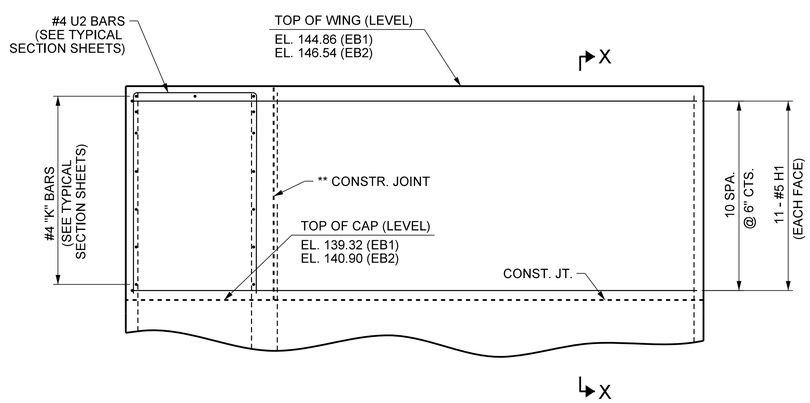

ELEVATION OF WING (W1)

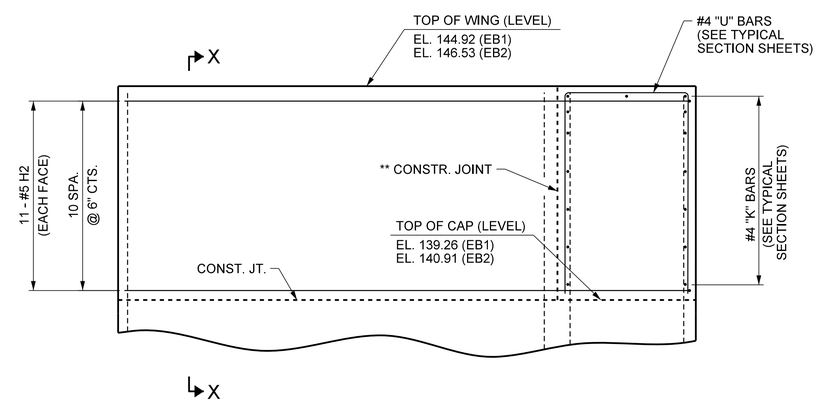

ELEVATION OF WING (W2)

WING DETAILS

FOR LOWER WING REINFORCING STEEL AND DETAILS, SEE "END BENT WING DETAIL" SHEET

PROJECT NO. I-6011A

ROBESON COUNTY

STATION: 29+75.30 -L-

STATE OF NORTH CAROLINA
DEPARTMENT OF TRANSPORTATION
RALEIGH

SUPERSTRUCTURE

UPPER WING DETAILS AT INTEGRAL END BENTS

REVISIONS									SHEET NO.
NO.	BY:	DATE:	NO.	BY:	DATE:				S-11
1			3						TOTAL SHEETS
2			4						34

DOCUMENT NOT CONSIDERED FINAL UNLESS ALL SIGNATURES COMPLETED

NORTH CAROLINA PROFESSIONAL SEAL 46232 ENGINEER Santiago E. Aguilar

Signed by: Santiago E Aguilar
43B96A7BEF94402...
5/14/2026

moffatt & nichol
4700 FALLS OF NEUSE ROAD, SUITE 300
RALEIGH, NORTH CAROLINA 27609
(919) 781-4626 VOICE (919) 781-4869 FAX
NC LICENSE NO.: F-0105

DRAWN BY :	T. KIRSCHBAUM	DATE :	01/2026
CHECKED BY :	P. SHAW	DATE :	01/2026
DESIGN ENGINEER OF RECORD:	S. AGUILAR	DATE :	02/2026

5/13/2026
P:\RA\11125-02\20 CADD\I-6011A\Structures\01-CADD\I-6011A_Print File.dgn
tkirschbaum

Docusign Envelope ID: B51A3BFD-B61E-8A47-81F7-C89E23847CA8

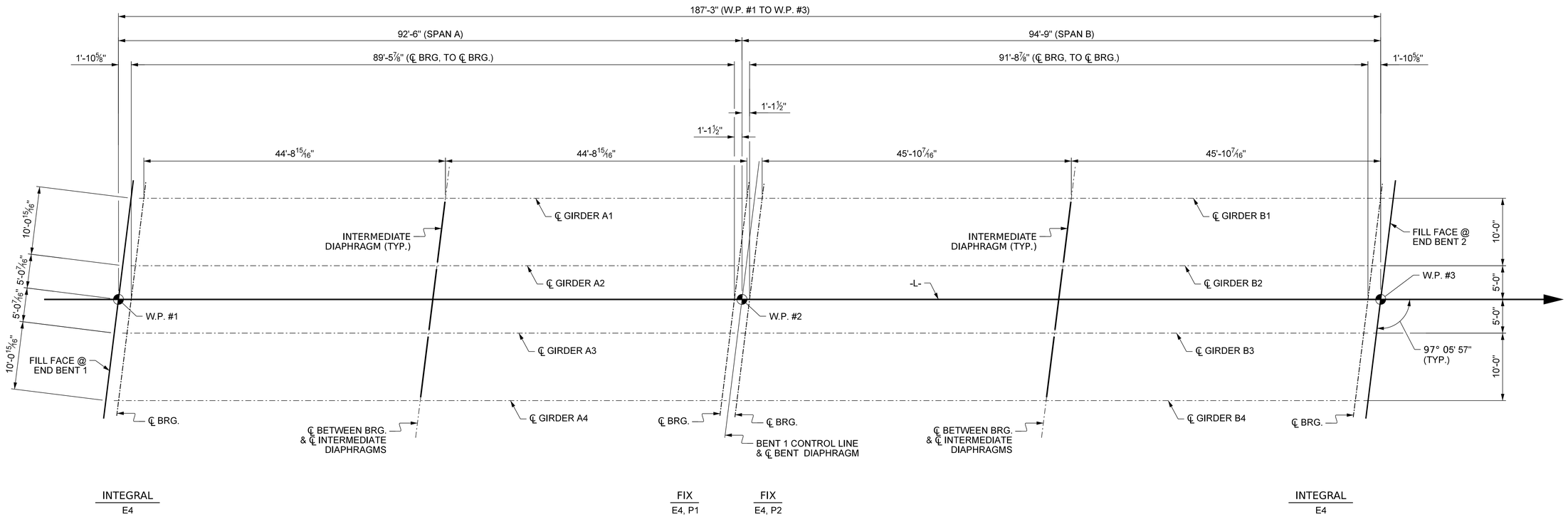

FRAMING PLAN

PROJECT NO. I-6011A

ROBESON COUNTY

STATION: 29+75.30 -L-

NOTES

FOR INTERMEDIATE STEEL DIAPHRAGMS, SEE "INTERMEDIATE STEEL DIAPHRAGMS FOR TYPE IV PRESTRESSED CONCRETE GIRDERS" SHEET.

FOR ELASTOMERIC BEARING DETAILS, SEE "ELASTOMERIC BEARING DETAILS" SHEET.

END BENTS AND INTERMEDIATE BENT ARE PARALLEL.

ALL GIRDERS ARE PARALLEL TO -L-.

CONTRACTOR IS RESPONSIBLE FOR FURNISHING ANY NECESSARY TEMPORARY BRACING FOR GIRDERS DURING ERECTION PRIOR TO PLACING DIAPHRAGMS AND DECK.

ALL DIMENSIONS SHOWN ARE HORIZONTAL.

DRAWN BY :	T. KIRSCHBAUM	DATE :	01/2026
CHECKED BY :	P. SHAW	DATE :	01/2026
DESIGN ENGINEER OF RECORD:	S. AGUILAR	DATE :	02/2026

moffatt & nichol
4700 FALLS OF NEUSE ROAD, SUITE 300
RALEIGH, NORTH CAROLINA 27609
(919) 781-4626 VOICE (919) 781-4869 FAX
NC LICENSE NO.: F-0105

DOCUMENT NOT CONSIDERED FINAL UNLESS ALL SIGNATURES COMPLETED

NORTH CAROLINA PROFESSIONAL SEAL 46232 ENGINEER Santiago E. Aguilar

Signed by: Santiago E Aguilar
438996A7BEF64402
5/14/2026

STATE OF NORTH CAROLINA
DEPARTMENT OF TRANSPORTATION
RALEIGH

SUPERSTRUCTURE

FRAMING PLAN

REVISIONS								SHEET NO.
NO.	BY:	DATE:	NO.	BY:	DATE:			S-12
1			3					TOTAL SHEETS
2			4					34

5/13/2026
P:\RA\11125-00\20 CADD\I-6011A\Structures\01-CADD\I-6011A_Print File.dgn
tkirschbaum

Docusign Envelope ID: B51A3BFD-B61E-8A47-81F7-C89E23847CA8

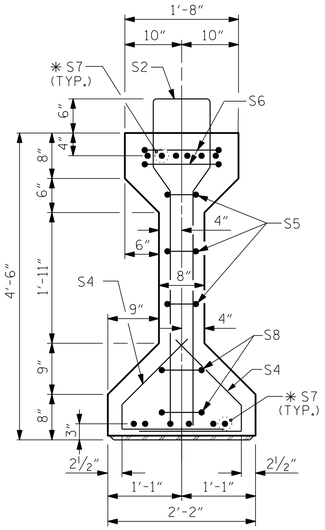

SECTION A-A

✱ FOR S7 BARS, SEE DETAIL "C" OF PRESTRESSED CONCRETE GIRDER CONTINUOUS FOR LIVE LOAD DETAILS SHEET

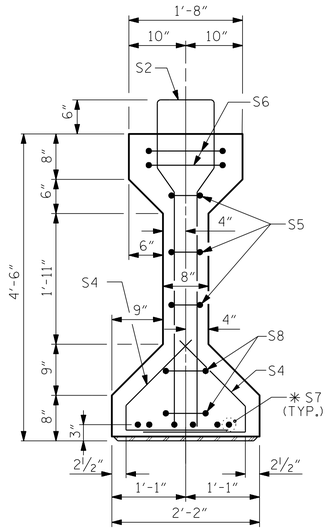

SECTION B-B

✱ FOR S7 BARS, SEE DETAIL "D" OF PRESTRESSED CONCRETE GIRDER CONTINUOUS FOR LIVE LOAD DETAILS SHEET

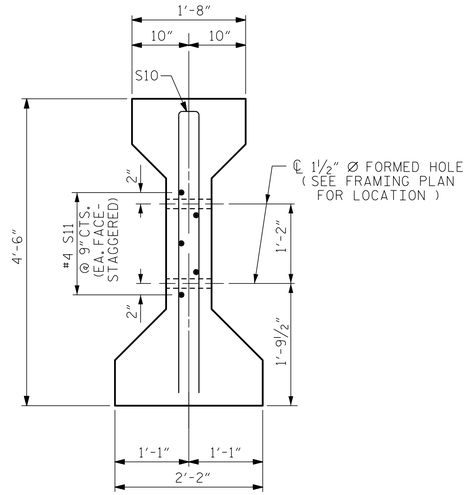

SECTION C-C

(S1 BARS NOT SHOWN)

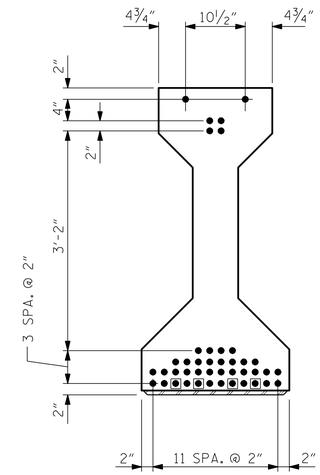

AT END OF GIRDER

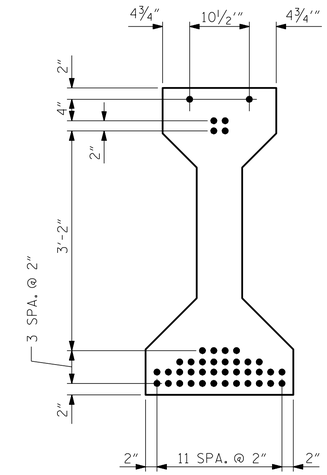

AT ℄ OF GIRDER

0.6" Ø LOW RELAXATION STRAND LAYOUT

DEBONDING LEGEND

- ● FULLY BONDED STRANDS
- ◉ STRANDS DEBONDED FOR 14'-0" FROM END OF GIRDER

0.6" Ø L. R. GRADE 270 STRANDS

AREA (SQUARE INCHES)	ULTIMATE STRENGTH (LBS. PER STRAND)	APPLIED PRESTRESS (LBS. PER STRAND)
0.217	58,600	43,950

REINFORCING STEEL FOR ONE GIRDER

BAR	NUMBER	SIZE	TYPE	LENGTH	WEIGHT
S1	64	#4	1	10'-8"	456
S2	12	#6	1	10'-8"	192
S3	20	#5	1	10'-8"	223
S4	64	#4	3	3'-5"	146
S5	6	#4	2	8'-5"	34
S6	4	#4	2	9'-1"	24
✱ S7	18	#5	STR	3'-8"	69
S8	4	#4	2	8'-7"	23
S9	2	#3	STR	1'-10"	1
S10	2	#5	2	8'-8"	18
S11	5	#4	STR	7'-0"	23
S12	1	#3	STR	1'-4"	1

✱ NOTE: S7 BARS SHALL BE BENT BEFORE SHIPMENT. HEAT BENDING SHALL NOT BE ALLOWED.

BAR TYPES

ALL BAR DIMENSIONS ARE OUT-TO-OUT

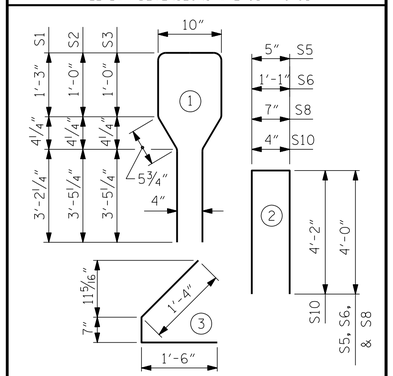

QUANTITIES FOR ONE GIRDER

	REINFORCING STEEL LB.	8,500 PSI CONCRETE C.Y.	0.6" Ø L. R. STRANDS No.
GIRDER	1,210	18.4	42

GIRDERS REQUIRED

NUMBER	LENGTH	TOTAL LENGTH
4	90'-10⅞"	363'-7½"

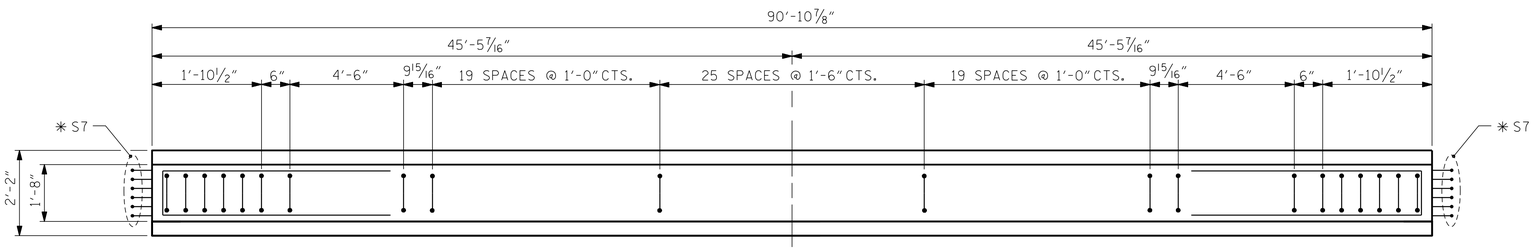

PLAN OF GIRDER

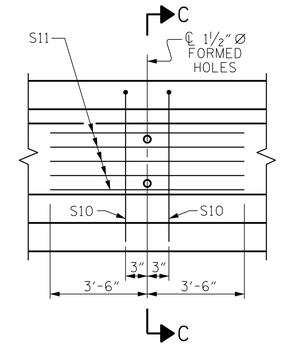

PARTIAL ELEVATION

SHOWING INTERMEDIATE DIAPHRAGM REINFORCING STEEL FOR ALL GIRDERS

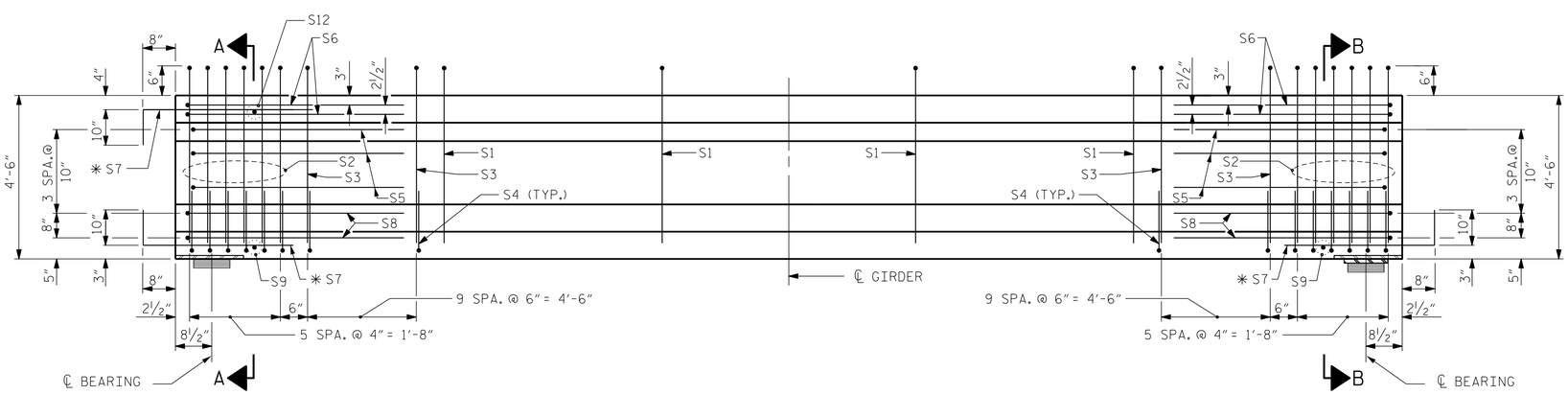

INTEGRAL END BENT

ELEVATION OF GIRDER

(SEE PARTIAL ELEVATION FOR ADDITIONAL "S" BARS)

FIX

PROJECT NO. I-6011A

ROBESON COUNTY

STATION: 29+75.30 -L-

SHEET 1 OF 4

STATE OF NORTH CAROLINA
DEPARTMENT OF TRANSPORTATION
RALEIGH

STANDARD

AASHTO TYPE IV PRESTRESSED CONCRETE GIRDER - SPAN A

ASSEMBLED BY: T. KIRSCHBAUM	DATE: 01/2026
CHECKED BY: P. SHAW	DATE: 01/2026

DRAWN BY:	JMB	12/87	REV.	1/15	MAA/TMG
CHECKED BY:	ARB	12/87	REV.	12/17	MAA/THC
			REV.	10/23	BNB/AKP

moffatt & nichol
4700 FALLS OF NEUSE ROAD, SUITE 300
RALEIGH, NORTH CAROLINA 27609
(919) 781-4626 VOICE (919) 781-4869 FAX
NC LICENSE NO.: F-0105

DOCUMENT NOT CONSIDERED FINAL UNLESS ALL SIGNATURES COMPLETED

NORTH CAROLINA PROFESSIONAL SEAL 46232 ENGINEER Santiago E. Aguilar

Signed by: Santiago E Aguilar
43B96A78EF64402...
5/14/2026

REVISIONS								SHEET NO.
NO.	BY:	DATE:	NO.	BY:	DATE:			S-13
1			3					TOTAL SHEETS
2			4					34

STD. NO. PCG3

5/13/2026
P:\RA\11125-02\20 CADD\I-6011A\Structures\01-CADD\I-6011A_Print File.dgn
tkirschbaum

Docusign Envelope ID: B51A3BFD-B61E-8A47-81F7-C89E23847CA8

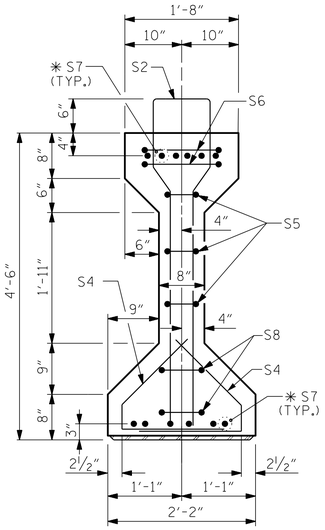

SECTION A-A

* FOR S7 BARS, SEE DETAIL "C" OF PRESTRESSED CONCRETE GIRDER CONTINUOUS FOR LIVE LOAD DETAILS SHEET

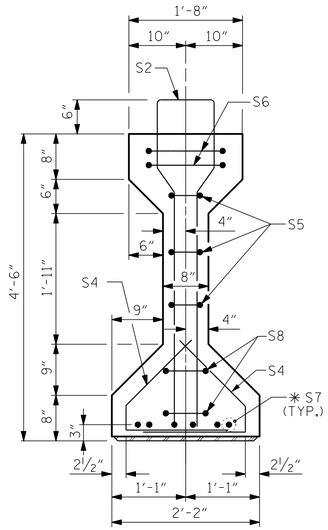

SECTION B-B

* FOR S7 BARS, SEE DETAIL "D" OF PRESTRESSED CONCRETE GIRDER CONTINUOUS FOR LIVE LOAD DETAILS SHEET

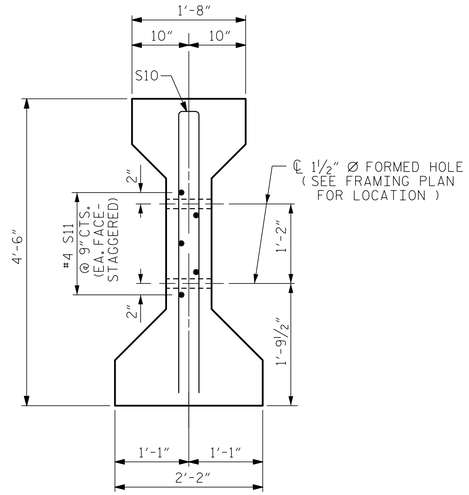

SECTION C-C

(S1 BARS NOT SHOWN)

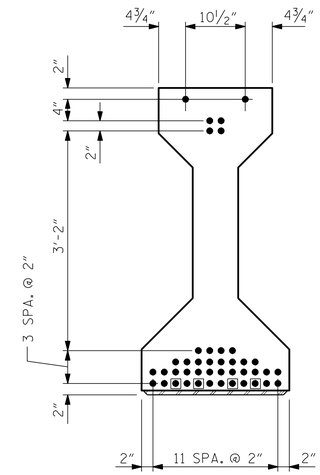

AT END OF GIRDER

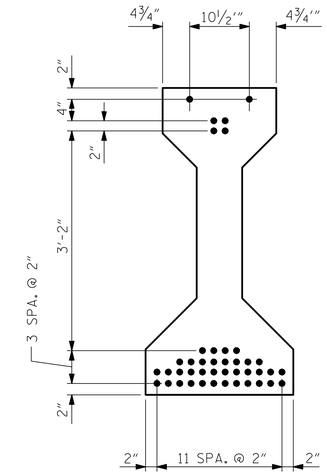

AT ℄ OF GIRDER

0.6" Ø LOW RELAXATION STRAND LAYOUT

DEBONDING LEGEND

- ● FULLY BONDED STRANDS
- ◉ STRANDS DEBONDED FOR 14'-0" FROM END OF GIRDER

0.6" Ø L. R. GRADE 270 STRANDS

AREA (SQUARE INCHES)	ULTIMATE STRENGTH (LBS. PER STRAND)	APPLIED PRESTRESS (LBS. PER STRAND)
0.217	58,600	43,950

REINFORCING STEEL FOR ONE GIRDER

BAR	NUMBER	SIZE	TYPE	LENGTH	WEIGHT
S1	66	#4	1	10'-8"	470
S2	12	#6	1	10'-8"	192
S3	20	#5	1	10'-8"	223
S4	64	#4	3	3'-5"	146
S5	6	#4	2	8'-5"	34
S6	4	#4	2	9'-1"	24
* S7	18	#5	STR	3'-8"	69
S8	4	#4	2	8'-7"	23
S9	2	#3	STR	1'-10"	1
S10	2	#5	2	8'-8"	18
S11	5	#4	STR	7'-0"	23
S12	1	#3	STR	1'-4"	1

* NOTE: S7 BARS SHALL BE BENT BEFORE SHIPMENT. HEAT BENDING SHALL NOT BE ALLOWED.

BAR TYPES

ALL BAR DIMENSIONS ARE OUT-TO-OUT

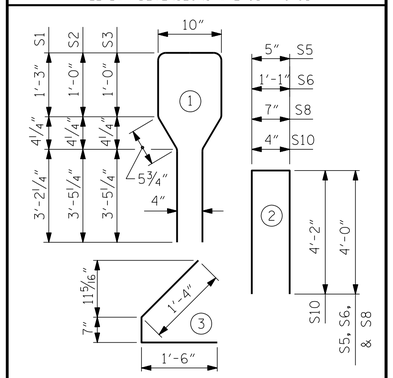

QUANTITIES FOR ONE GIRDER

	REINFORCING STEEL LB.	8,500 PSI CONCRETE C.Y.	0.6" Ø L. R. STRANDS No.
GIRDER	1,224	18.9	42

GIRDERS REQUIRED

NUMBER	LENGTH	TOTAL LENGTH
4	93'-1⅞"	372'-7½"

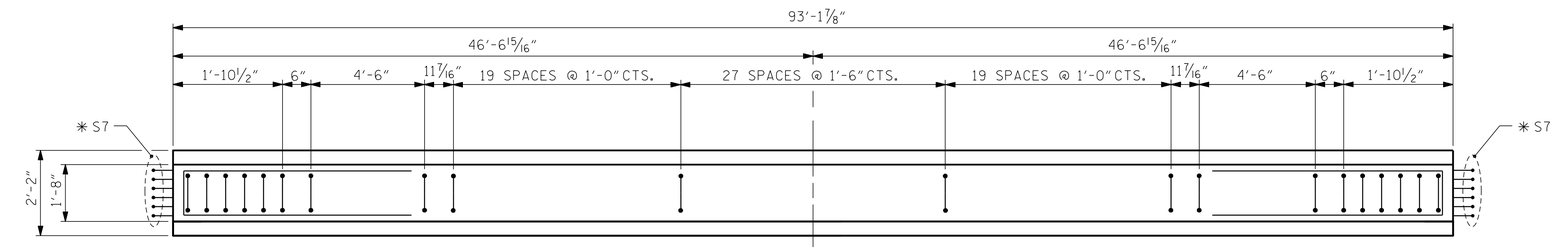

PLAN OF GIRDER

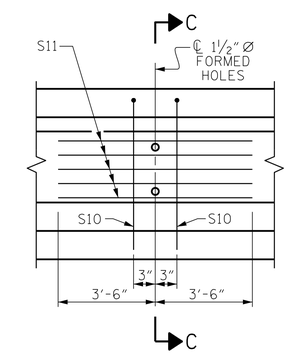

PARTIAL ELEVATION

SHOWING INTERMEDIATE DIAPHRAGM REINFORCING STEEL FOR ALL GIRDERS

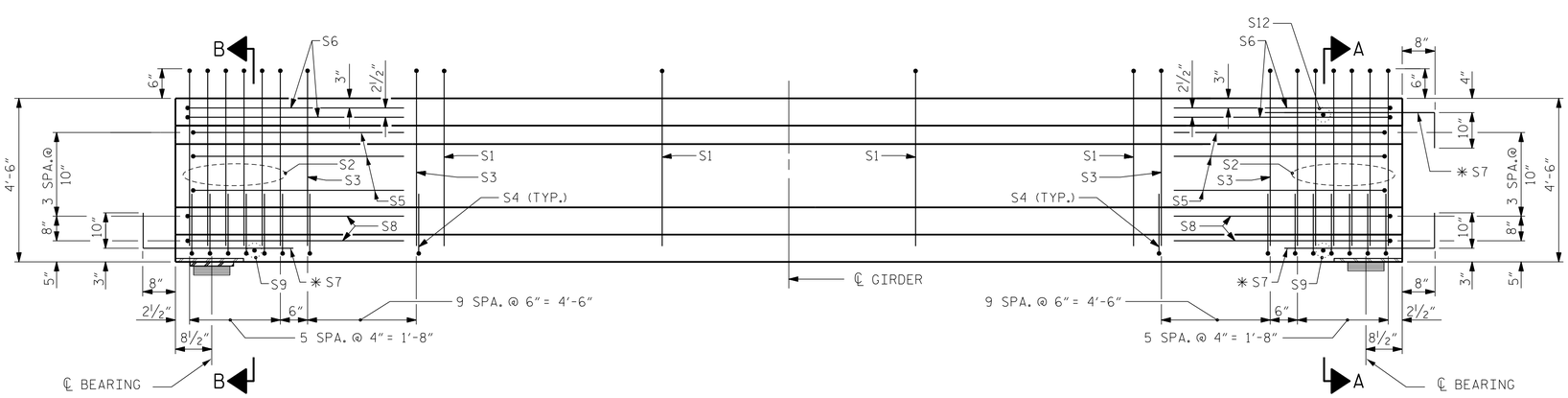

ELEVATION OF GIRDER

(SEE PARTIAL ELEVATION FOR ADDITIONAL "S" BARS)

ASSEMBLED BY: T. KIRSCHBAUM	DATE: 01/2026		
CHECKED BY: P. SHAW	DATE: 01/2026		
DRAWN BY: JMB 12/87	REV. 1/15	MAA/TMG	
CHECKED BY: ARB 12/87	REV. 12/17	MAA/THC	
	REV. 10/23	BNB/AKP	

moffatt & nichol
4700 FALLS OF NEUSE ROAD, SUITE 300
RALEIGH, NORTH CAROLINA 27609
(919) 781-4626 VOICE (919) 781-4869 FAX
NC LICENSE NO.: F-0105

DOCUMENT NOT CONSIDERED FINAL UNLESS ALL SIGNATURES COMPLETED

NORTH CAROLINA PROFESSIONAL SEAL 46232 ENGINEER Santiago E. Aguilar

Signed by: Santiago E Aguilar
438996A7BEF64402
5/14/2026

PROJECT NO. I-6011A

ROBESON COUNTY

STATION: 29+75.30 -L-

SHEET 2 OF 4

STATE OF NORTH CAROLINA
DEPARTMENT OF TRANSPORTATION
RALEIGH

STANDARD

AASHTO TYPE IV PRESTRESSED CONCRETE GIRDER - SPAN B

REVISIONS								SHEET NO.
NO.	BY:	DATE:	NO.	BY:	DATE:			S-14
1			3					TOTAL SHEETS
2			4					34

STD. NO. PCG3

5/13/2026
P:\RA\11125-02\20 CADD\I-6011A\Structures\01-CADD\I-6011A_Print File.dgn
tkirschbaum

Docusign Envelope ID: B51A3BFD-B61E-8A47-81F7-C89E23847CA8

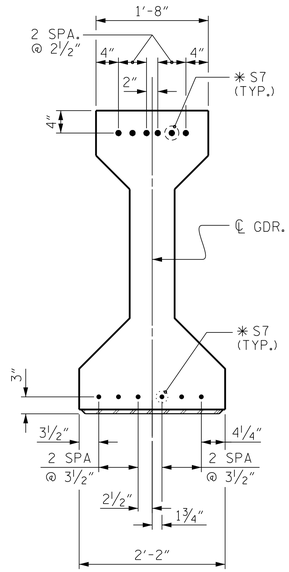

DETAIL "C"

(AT INTEGRAL END BENT)

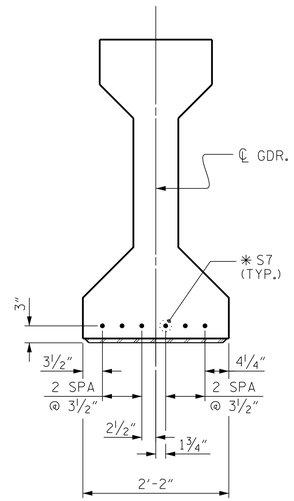

DETAIL "D"

(AT CONTINUOUS BENT)

✱ NOTE: S7 BARS SHALL BE BENT BEFORE SHIPMENT. HEAT BENDING SHALL NOT BE ALLOWED

NOTES

ALL PRESTRESSING STRANDS SHALL BE 7-WIRE LOW-RELAXATION GRADE 270 STRANDS AND SHALL CONFORM TO AASHTO M203 EXCEPT FOR SAMPLING REQUIREMENTS WHICH SHALL BE IN ACCORDANCE WITH THE STANDARD SPECIFICATIONS.

ALL REINFORCING STEEL SHALL BE GRADE 60.

EMBEDDED PLATE "B-1" SHALL BE GALVANIZED IN ACCORDANCE WITH THE STANDARD SPECIFICATIONS.

ANCHOR STUDS SHALL CONFORM TO AASHTO M169 GRADES 1010 THROUGH 1020 OR APPROVED EQUAL, AND SHALL MEET THE TYPE "B" REQUIREMENTS OF SUBSECTION 7.3 OF THE ANSI/AASHTO/AWS D1.5 BRIDGE WELDING CODE.

AT ENDS OF GIRDERS TO BE EMBEDDED IN CONCRETE DIAPHRAGMS OR END WALLS, PRESTRESSING STRANDS MAY EXTEND A MAXIMUM OF 2" BEYOND THE GIRDER ENDS. OTHERWISE, PRESTRESSING STRANDS SHALL BE CUT FLUSH WITH THE GIRDER ENDS.

THE TRANSFER OF LOAD FROM THE ANCHORAGES TO THE GIRDER SHALL BE DONE WHEN CONCRETE HAS REACHED A COMPRESSIVE STRENGTH OF NOT LESS THAN 6800 PSI.

DEPENDING ON THE TYPE OF SYSTEM USED TO SUPPORT THE DECK SLAB FORMS, PRESET ANCHORS MAY BE NECESSARY IN THE PRESTRESSED CONCRETE GIRDER.

THE TOP SURFACE OF THE GIRDER, EXCLUDING THE OUTSIDE 4", SHALL BE RAKED TO A DEPTH OF ¼".

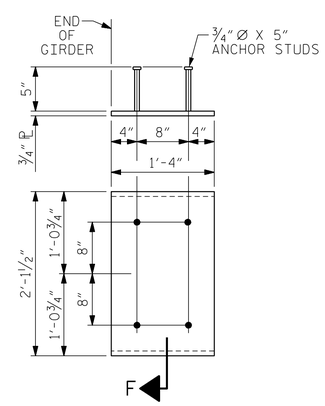

EMBEDDED PLATE "B-1" DETAILS FOR AASHTO TYPE IV GIRDER

(2 REQ'D PER GIRDER)

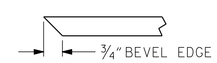

SECTION "F"

(SEE NOTES)

PROJECT NO. I-6011A

ROBESON COUNTY

STATION: 29+75.30 -L-

SHEET 3 OF 4

STATE OF NORTH CAROLINA
DEPARTMENT OF TRANSPORTATION
RALEIGH

STANDARD

PRESTRESSED CONCRETE GIRDER FOR CONTINUOUS LIVE LOAD DETAILS

REVISIONS						SHEET NO.
NO.	BY:	DATE:	NO.	BY:	DATE:	S-15
1			3			TOTAL SHEETS
2			4			34

DOCUMENT NOT CONSIDERED FINAL UNLESS ALL SIGNATURES COMPLETED

NORTH CAROLINA PROFESSIONAL SEAL 46232 ENGINEER Santiago E. Aguilar

Signed by: Santiago E Aguilar
43B96A78EF64402...
5/14/2026

moffatt & nichol
4700 FALLS OF NEUSE ROAD, SUITE 300
RALEIGH, NORTH CAROLINA 27609
(919) 781-4626 VOICE (919) 781-4869 FAX
NC LICENSE NO.: F-0105

ASSEMBLED BY:	T. KIRSCHBAUM	DATE:	01/2026
CHECKED BY:	P. SHAW	DATE:	01/2026
DRAWN BY:	ELR 11/91	REV. 1/15	MAA/TMC
CHECKED BY:	GRP 11/91	REV. 12/17	MAA/THC
		REV. 10/23	BNB/AKP

STD. NO. PCG9 (Sht. 3a)

5/13/2026
P:\RA\11125-0020 CADD\I-6011A\Structures\01-CADD\I-6011A_Print File.dgn
tkirschbaum

Docusign Envelope ID: B51A3BFD-B61E-8A47-81F7-C89E23847CA8

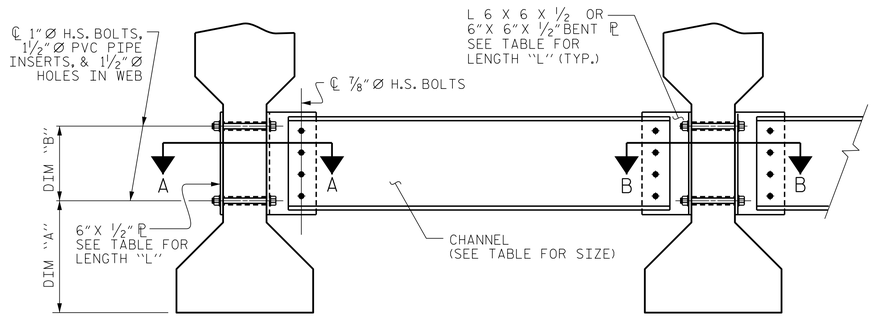

EXTERIOR GIRDER

INTERIOR GIRDER

PART SECTION AT INTERMEDIATE DIAPHRAGM

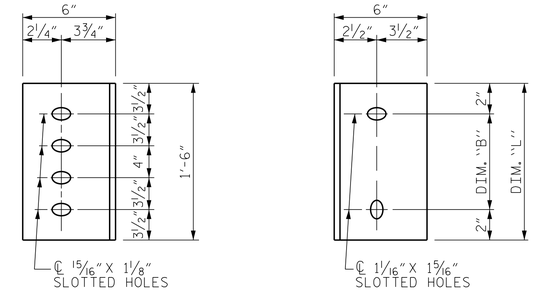

DIAPHRAGM FACE

WEB FACE

CONNECTOR PLATE DETAILS

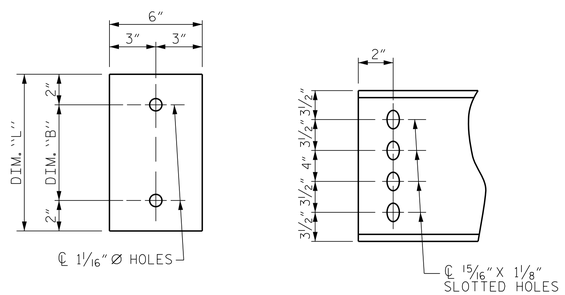

PLATE DETAILS

CHANNEL END

STRUCTURAL STEEL NOTES

ALL INTERMEDIATE DIAPHRAGM STEEL AND CONNECTOR PLATES SHALL BE AASHTO M270 GRADE 50 OR APPROVED EQUAL.

TENSION ON THE ASTM A325 BOLTS THROUGH THE CHANNEL MEMBER SHALL BE CALIBRATED USING DIRECT TENSION INDICATOR WASHERS IN ACCORDANCE WITH THE STANDARD SPECIFICATIONS.

TENSION ON THE ASTM A449 BOLTS THROUGH THE GIRDER WEB SHALL BE SNUG TIGHTENED FOLLOWED BY AN ADDITIONAL ¼ TURN.

THE PLATES, BENT PLATES, CHANNELS, AND ANGLES SHALL BE GALVANIZED OR METALLIZED IN ACCORDANCE WITH THE STANDARD SPECIFICATIONS. FOR THERMAL SPRAYED COATINGS (METALLIZATION), SEE SPECIAL PROVISIONS.

FOR METALLIZATION, APPLY A THERMAL SPRAYED COATING WITH A SEAL COAT TO ALL STEEL DIAPHRAGM SURFACES IN ACCORDANCE WITH THE DEPARTMENT'S THERMAL SPRAYED COATINGS (METALLIZATION) PROGRAM, THERMAL SPRAYED COATINGS SPECIAL PROVISION AND SECTION 442 OF THE STANDARD SPECIFICATIONS.

GALVANIZE THE HIGH STRENGTH BOLTS, NUTS, WASHERS AND DIRECT TENSION INDICATORS IN ACCORDANCE WITH THE STANDARD SPECIFICATIONS.

USE AN ASTM F436 HARDENED WASHER WITH STANDARD AND SLOTTED HOLES UNDER EACH BOLT HEAD AND NUT.

FOR BOLTS THROUGH THE GIRDER WEB, PROVIDE SUFFICIENT LENGTH OF THREADS ON ALL BOLTS TO ACCOMMODATE WASHERS AND THE THICKNESS OF CONNECTING MEMBER PLUS AT LEAST ¼" PROJECTION BEYOND THE NUT.

INTERMEDIATE DIAPHRAGM ASSEMBLY SHALL COMPLY WITH SECTION 1072 OF THE STANDARD SPECIFICATIONS.

SUBMIT TWO SETS OF WORKING DRAWINGS FOR THE INTERMEDIATE DIAPHRAGM ASSEMBLY FOR REVIEW, COMMENTS AND ACCEPTANCE. AFTER REVIEW, COMMENTS, AND ACCEPTANCE, SUBMIT SEVEN SETS FOR DISTRIBUTION.

IN THE EXTERIOR BAYS, PLACE TEMPORARY STRUTS BETWEEN PRESTRESSED GIRDERS ADJACENT TO THE STEEL DIAPHRAGMS. STRUTS SHALL REMAIN IN PLACE 3 DAYS AFTER CONCRETE IS PLACED.

THE COST OF THE STEEL DIAPHRAGMS AND ASSEMBLIES SHALL BE INCLUDED IN THE UNIT PRICE BID FOR PRESTRESSED CONCRETE GIRDERS.

TABLE

GIRDER TYPE	CHANNEL SIZE	DIM "A"	DIM "B"	DIM "L"
IV	MC 18 x 42.7	1'-9½"	1'-2"	1'-6"

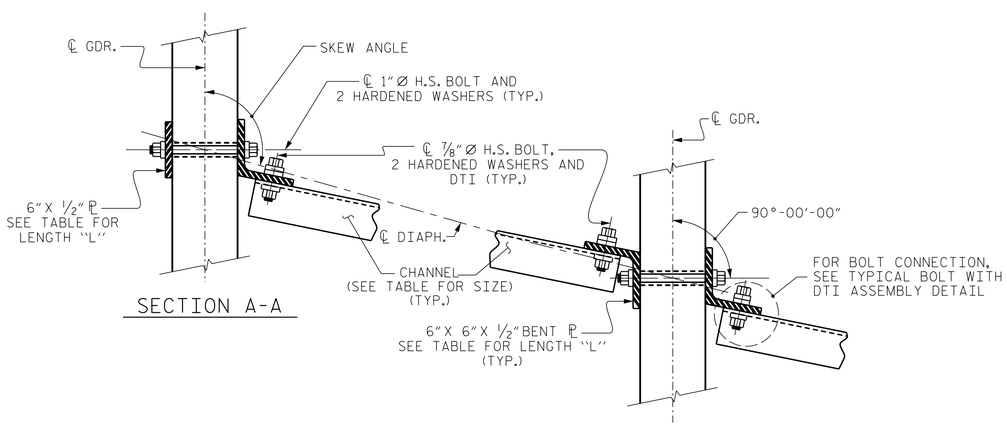

SECTION A-A

SECTION B-B

CONNECTION DETAILS

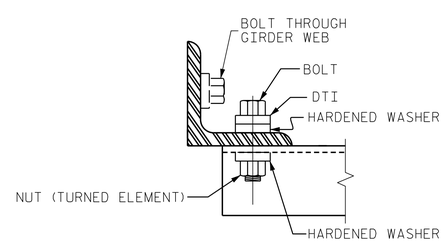

BOLT WITH DTI ASSEMBLY DETAIL

PROJECT NO. I-6011A

ROBESON COUNTY

STATION: 29+75.30 -L-

SHEET 4 OF 4

STATE OF NORTH CAROLINA
DEPARTMENT OF TRANSPORTATION
RALEIGH

STANDARD

INTERMEDIATE STEEL DIAPHRAGMS FOR AASHTO TYPE IV PRESTRESSED CONCRETE GIRDERS

REVISIONS						SHEET NO.
NO.	BY:	DATE:	NO.	BY:	DATE:	S-16
1			3			TOTAL SHEETS
2			4			34

DOCUMENT NOT CONSIDERED FINAL UNLESS ALL SIGNATURES COMPLETED

NORTH CAROLINA PROFESSIONAL SEAL 46232 ENGINEER Santiago E. Aguilar

Signed by: Santiago E Aguilar
43896A7BEF94422...
5/14/2026

moffatt & nichol
4700 FALLS OF NEUSE ROAD, SUITE 300
RALEIGH, NORTH CAROLINA 27609
(919) 781-4626 VOICE (919) 781-4869 FAX
NC LICENSE NO.: F-0105

ASSEMBLED BY:	T. KIRSCHBAUM	DATE:	01/2026
CHECKED BY:	P. SHAW	DATE:	01/2026
DRAWN BY:	TLA 6/05	REV. 5/1/06RRR	KMM/GM
CHECKED BY:	VC 6/05	REV. 10/1/11	MAA/GM
		REV. 12/17	MAA/THC

5/13/2026
P:\RA\11125-02\20 CADD\I-6011A\Structures\01-CADD\I-6011A_Print File.dgn
tkirschbaum

STD. NO. PCG10

Docusign Envelope ID: B51A3BFD-B61E-8A47-81F7-C89E23847CA8

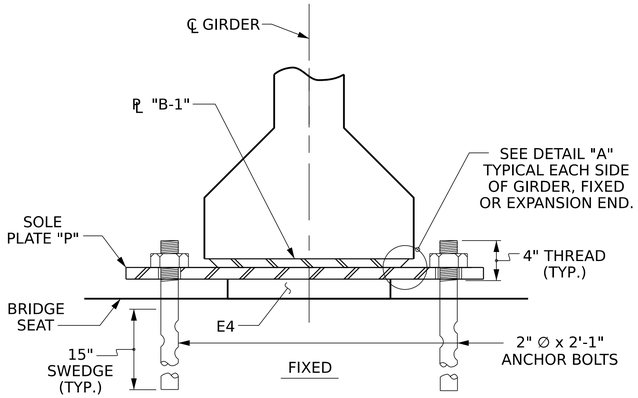

SECTION E-E

(SHOWING CONTINUOUS BENT)

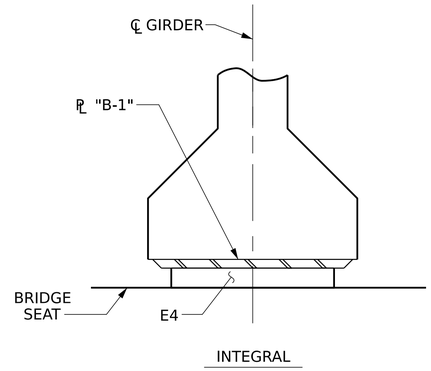

SECTION D-D

(SHOWING INTEGRAL END BENT)

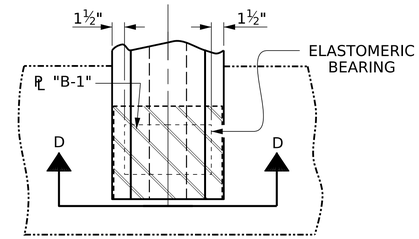

TYPICAL PLAN

(SHOWING INTEGRAL END BENT)

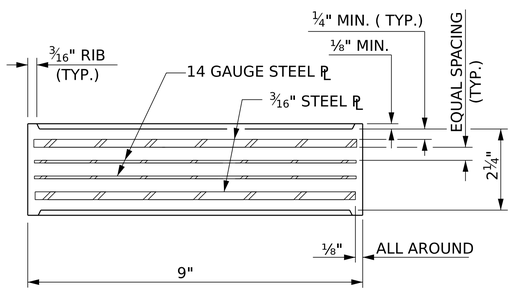

TYPICAL SECTION OF ELASTOMERIC BEARINGS

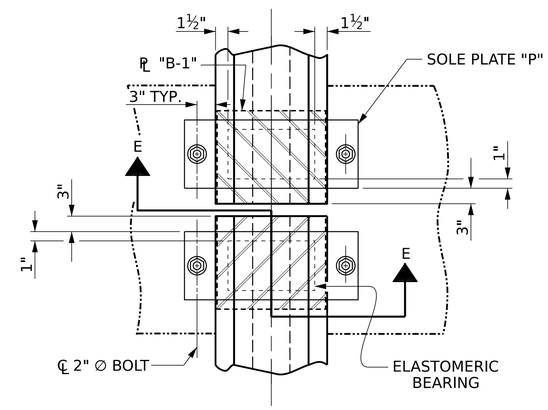

TYPICAL PLAN

(SHOWING CONTINUOUS BENT)

NOTES

AT ALL FIXED POINTS OF SUPPORT, NUTS FOR ANCHOR BOLTS ARE TO BE TIGHTENED FINGER TIGHT AND THEN BACKED OFF ½ TURN. THE THREAD OF THE NUT AND BOLT SHALL THEN BE BURRED WITH A SHARP POINTED TOOL.

STEEL SOLE PLATES, ANCHOR BOLTS, NUTS, AND WASHERS SHALL BE GALVANIZED IN ACCORDANCE WITH THE STANDARD SPECIFICATIONS.

PRIOR TO WELDING, GRIND THE GALVANIZED SURFACE OF THE PORTION OF THE EMBEDDED PLATE AND SOLE PLATE THAT ARE TO BE WELDED. AFTER WELDING, DAMAGED GALVANIZED SURFACES SHALL BE REPAIRED IN ACCORDANCE WITH THE STANDARD SPECIFICATIONS.

WHEN WELDING THE SOLE PLATE TO THE EMBEDDED PLATE IN THE GIRDER, USE TEMPERATURE INDICATING WAX PENS, OR OTHER SUITABLE MEANS, TO ENSURE THAT THE TEMPERATURE OF THE SOLE PLATE DOES NOT EXCEED 300°F. TEMPERATURES ABOVE THIS MAY DAMAGE THE ELASTOMER.

SOLE PLATE "P", BOLTS, NUTS, WASHERS, AND PIPE SLEEVE SHALL BE INCLUDED IN THE PAY ITEM FOR PRESTRESSED CONCRETE GIRDERS.

ANCHOR BOLTS SHALL MEET THE REQUIREMENTS OF ASTM A449. NUTS SHALL MEET THE REQUIREMENTS OF AASHTO M291-DH OR AASHTO M292-2H. WASHERS SHALL MEET THE REQUIREMENTS OF AASHTO M293. SHOP DRAWINGS ARE NOT REQUIRED FOR ANCHOR BOLT, NUTS AND WASHERS. SHOP INSPECTION IS REQUIRED.

ALL SURFACES OF BEARING PLATES SHALL BE SMOOTH AND STRAIGHT.

THE ELASTOMER IN THE STEEL REINFORCED BEARINGS SHALL HAVE A SHEAR MODULUS OF 0.160 KSI, IN ACCORDANCE WITH AASHTO M251.

FOR STEEL REINFORCED ELASTOMERIC BEARINGS, SEE STANDARD SPECIFICATIONS.

ALL SOLE PLATES SHALL BE AASHTO M270 GRADE 36.

MAXIMUM ALLOWABLE SERVICE LOADS	
D.L.+L.L. (NO IMPACT)	
TYPE V	365 k

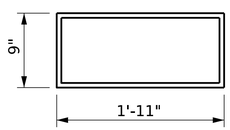

E4 (16 REQ'D)

PLAN VIEW OF ELASTOMERIC BEARING

TYPE V

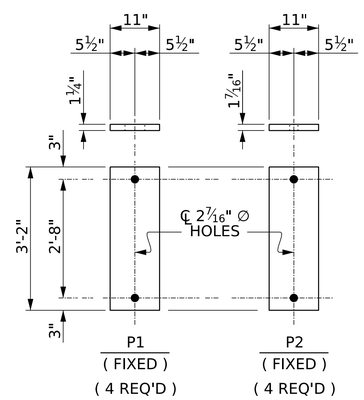

SOLE PLATE DETAILS ("P")

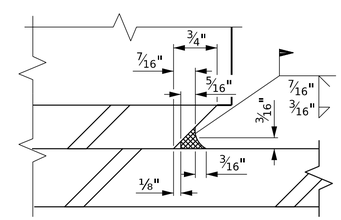

DETAIL "A"

PROJECT NO. I-6011A

ROBESON COUNTY

STATION: 29+75.30 -L-

STATE OF NORTH CAROLINA
DEPARTMENT OF TRANSPORTATION
RALEIGH

STANDARD

ELASTOMERIC BEARING DETAILS

PRESTRESSED CONCRETE GIRDER SUPERSTRUCTURE

DOCUMENT NOT CONSIDERED FINAL UNLESS ALL SIGNATURES COMPLETED

NORTH CAROLINA PROFESSIONAL SEAL 46232 ENGINEER Santiago E. Aguilar

Signed by: Santiago E Aguilar
438996A7BEF64402
5/14/2026

moffatt & nichol
4700 FALLS OF NEUSE ROAD, SUITE 300
RALEIGH, NORTH CAROLINA 27609
(919) 781-4626 VOICE (919) 781-4869 FAX
NC LICENSE NO.: F-0105

REVISIONS							SHEET NO.
NO.	BY:	DATE:	NO.	BY:	DATE:		S-17
1			3				TOTAL SHEETS
2			4				34

ASSEMBLED BY: T. KIRSCHBAUM		DATE:	01/2026
CHECKED BY: P. SHAW		DATE:	01/2026
DRAWN BY: WJH 8/89	REV. 12/17		MAA/THC
CHECKED BY: CRK 8/89	REV. 10/21		BNB/AAI
	REV. 10/23		BNB/SNM

5/13/2026
P:\RA\11125-00\20 CADD\I-6011A\Structures\01-CADD\I-6011A_Print File.dgn
tkirschbaum

STD. NO. EB4 (SHT. 1)

Docusign Envelope ID: B51A3BFD-B61E-8A47-81F7-C89E23847CA8

NOTES

* INCLUDES FUTURE WEARING SURFACE

ALL VALUES ARE SHOWN IN FEET (DECIMAL FORM), EXCEPT `` FINAL CAMBER '', WHICH IS GIVEN IN INCHES (FRACTION FORM).

DEAD LOAD DEFLECTION TABLE FOR GIRDERS

0.6" Ø LOW RELAXATION	SPAN A GIRDERS 1 & 4																				
TWENTIETH POINTS	0	.05	.10	.15	.20	.25	.30	.35	.40	.45	.50	.55	.60	.65	.70	.75	.80	.85	.90	.95	0
CAMBER (GIRDER ALONE IN PLACE) ↑	0.000	0.029	0.057	0.083	0.107	0.128	0.147	0.161	0.172	0.178	0.180	0.178	0.172	0.161	0.147	0.128	0.107	0.083	0.057	0.029	0.000
* DEFLECTION DUE TO SUPERIMPOSED D.L. ↓	0.000	0.017	0.034	0.050	0.066	0.080	0.092	0.101	0.108	0.112	0.114	0.112	0.108	0.101	0.092	0.080	0.066	0.050	0.034	0.017	0.000
FINAL CAMBER ↑	0	1/8"	1/4"	3/8"	1/2"	9/16"	11/16"	3/4"	3/4"	13/16"	13/16"	13/16"	3/4"	3/4"	11/16"	9/16"	1/2"	3/8"	1/4"	1/8"	0

DEAD LOAD DEFLECTION TABLE FOR GIRDERS

0.6" Ø LOW RELAXATION	SPAN A GIRDERS 2 & 3																				
TWENTIETH POINTS	0	.05	.10	.15	.20	.25	.30	.35	.40	.45	.50	.55	.60	.65	.70	.75	.80	.85	.90	.95	0
CAMBER (GIRDER ALONE IN PLACE) ↑	0.000	0.029	0.057	0.083	0.107	0.128	0.147	0.161	0.172	0.178	0.180	0.178	0.172	0.161	0.147	0.128	0.107	0.083	0.057	0.029	0.000
* DEFLECTION DUE TO SUPERIMPOSED D.L. ↓	0.000	0.018	0.037	0.056	0.073	0.088	0.101	0.111	0.119	0.123	0.125	0.123	0.119	0.111	0.101	0.088	0.073	0.056	0.037	0.018	0.000
FINAL CAMBER ↑	0	1/8"	1/4"	5/16"	7/16"	1/2"	9/16"	5/8"	5/8"	11/16"	11/16"	11/16"	5/8"	5/8"	9/16"	1/2"	7/16"	5/16"	1/4"	1/8"	0

DEAD LOAD DEFLECTION TABLE FOR GIRDERS

0.6" Ø LOW RELAXATION	SPAN B GIRDERS 1 & 4																				
TWENTIETH POINTS	0	.05	.10	.15	.20	.25	.30	.35	.40	.45	.50	.55	.60	.65	.70	.75	.80	.85	.90	.95	0
CAMBER (GIRDER ALONE IN PLACE) ↑	0.000	0.029	0.058	0.085	0.109	0.131	0.150	0.165	0.175	0.182	0.184	0.182	0.175	0.165	0.150	0.131	0.109	0.085	0.058	0.029	0.000
* DEFLECTION DUE TO SUPERIMPOSED D.L. ↓	0.000	0.019	0.037	0.056	0.073	0.088	0.101	0.112	0.119	0.124	0.125	0.124	0.119	0.112	0.101	0.088	0.073	0.056	0.037	0.019	0.000
FINAL CAMBER ↑	0	1/8"	1/4"	3/8"	7/16"	1/2"	9/16"	5/8"	11/16"	11/16"	11/16"	11/16"	11/16"	5/8"	9/16"	1/2"	7/16"	3/8"	1/4"	1/8"	0

DEAD LOAD DEFLECTION TABLE FOR GIRDERS

0.6" Ø LOW RELAXATION	SPAN B GIRDERS 2 & 3																				
TWENTIETH POINTS	0	.05	.10	.15	.20	.25	.30	.35	.40	.45	.50	.55	.60	.65	.70	.75	.80	.85	.90	.95	0
CAMBER (GIRDER ALONE IN PLACE) ↑	0.000	0.029	0.058	0.085	0.109	0.131	0.150	0.165	0.175	0.182	0.184	0.182	0.175	0.165	0.150	0.131	0.109	0.085	0.058	0.029	0.000
* DEFLECTION DUE TO SUPERIMPOSED D.L. ↓	0.000	0.020	0.041	0.062	0.081	0.097	0.112	0.123	0.131	0.136	0.138	0.136	0.131	0.123	0.112	0.097	0.081	0.062	0.041	0.020	0.000
FINAL CAMBER ↑	0	1/8"	3/16"	1/4"	3/8"	3/8"	7/16"	1/2"	1/2"	9/16"	9/16"	9/16"	1/2"	1/2"	7/16"	3/8"	3/8"	1/4"	3/16"	1/8"	0

PROJECT NO. I-6011A

ROBESON COUNTY

STATION: 29+75.30 -L-

STATE OF NORTH CAROLINA
DEPARTMENT OF TRANSPORTATION
RALEIGH

SUPERSTRUCTURE

DEAD LOAD DEFLECTIONS

DOCUMENT NOT CONSIDERED FINAL UNLESS ALL SIGNATURES COMPLETED

NORTH CAROLINA PROFESSIONAL SEAL 46232 ENGINEER Santiago E. Aguilar

Signed by: Santiago E Aguilar
43B96A78EF54402...
5/14/2026

moffatt & nichol
4700 FALLS OF NEUSE ROAD, SUITE 300
RALEIGH, NORTH CAROLINA 27609
(919) 781-4626 VOICE (919) 781-4869 FAX
NC LICENSE NO.: F-0105

REVISIONS						
NO.	BY:	DATE:	NO.	BY:	DATE:	
1			3			
2			4			

SHEET NO. S-18

TOTAL SHEETS 34

DRAWN BY : T. KIRSCHBAUM DATE : 01/2026
CHECKED BY : P. SHAW DATE : 01/2026
DESIGN ENGINEER OF RECORD: S. AGUILAR DATE : 02/2026

5/13/2026
P:\RA\11125-02\20 CADD\I-6011A\Structures\01-CADD\I-6011A_Print File.dgn
tkirschbaum

Docusign Envelope ID: B51A3BFD-B61E-8A47-81F7-C89E23847CA8

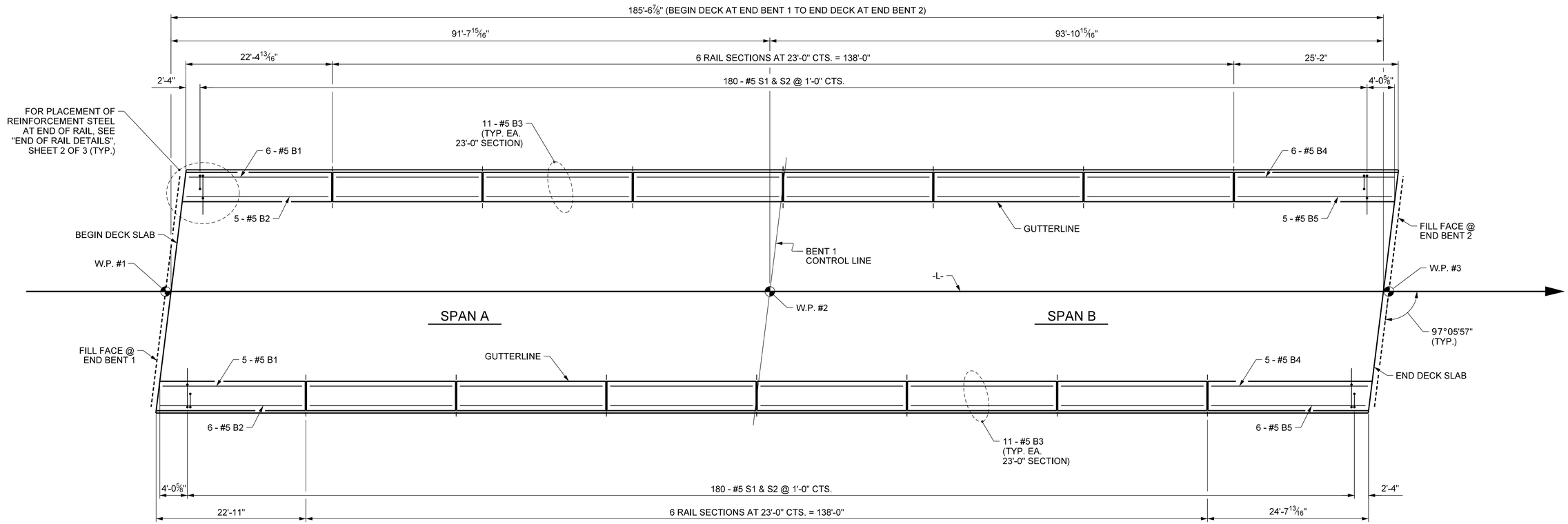

PLAN OF CONCRETE BARRIER RAIL

PROJECT NO. I-6011A

ROBESON COUNTY

STATION: 29+75.30 -L-

SHEET 1 OF 2

NOTES

#5 S1 AND S2 BARS MAY BE SHIFTED SLIGHTLY TO MAINTAIN 2" CLEAR TO EXPANSION JOINT IN RAIL.

DIMENSIONS ARE MEASURED ALONG THE OUSIDE FACE OF RAIL TO ℄ OF JOINTS, WHERE APPLICABLE.

DOCUMENT NOT CONSIDERED FINAL UNLESS ALL SIGNATURES COMPLETED

NORTH CAROLINA PROFESSIONAL SEAL 46232 ENGINEER Santiago E. Aguilar

Signed by: Santiago E Aguilar
43B96A78BF64402...
5/14/2026

moffatt & nichol
4700 FALLS OF NEUSE ROAD, SUITE 300
RALEIGH, NORTH CAROLINA 27609
(919) 781-4626 VOICE (919) 781-4869 FAX
NC LICENSE NO.: F-0105

STATE OF NORTH CAROLINA
DEPARTMENT OF TRANSPORTATION
RALEIGH

SUPERSTRUCTURE

CONCRETE BARRIER RAIL

REVISIONS						
NO.	BY:	DATE:	NO.	BY:	DATE:	
1			3			
2			4			

SHEET NO. S-19

TOTAL SHEETS 34

DRAWN BY :	T. KIRSCHBAUM	DATE :	01/2026
CHECKED BY :	P. SHAW	DATE :	01/2026
DESIGN ENGINEER OF RECORD:	S. AGUILAR	DATE :	02/2026

5/13/2026
P:\RA\11125-02\20 CADD\I-6011A\Structures\01-CADD\I-6011A_Print File.dgn
tkirschbaum

Docusign Envelope ID: B51A3BFD-B61E-8A47-81F7-C89E23847CA8

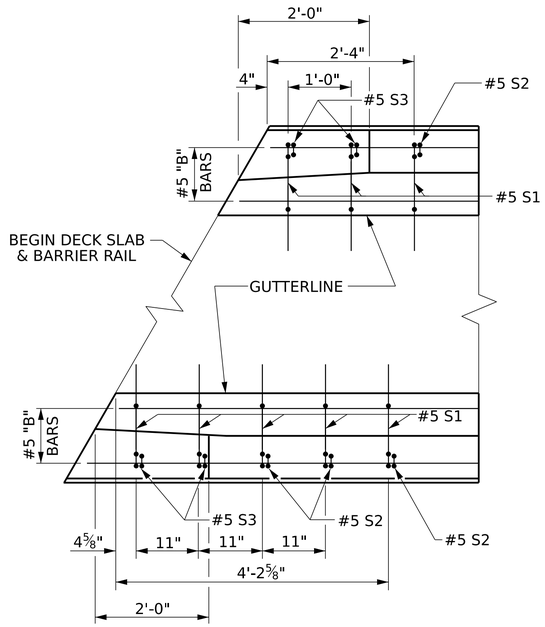

PLAN

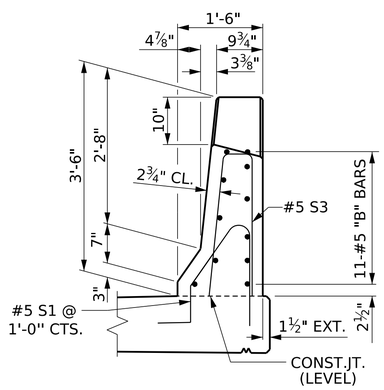

END VIEW

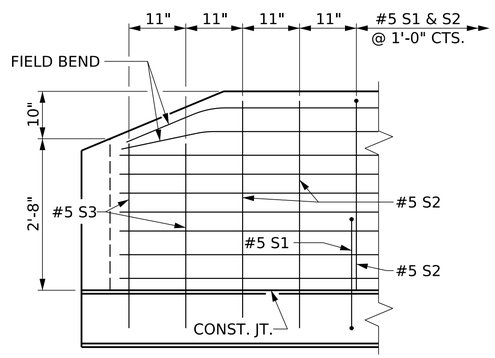

SIDE VIEW

END OF RAIL DETAILS

NOTES

THE BARRIER RAIL IN EACH SPAN SHALL NOT BE CAST UNTIL ALL SLAB CONCRETE IN THAT SPAN HAS BEEN CAST AND HAS REACHED A MINIMUM COMPRESSIVE STRENGTH OF 3,000 PSI.

ALL REINFORCING STEEL IN BARRIER RAILS SHALL BE EPOXY COATED.

GROOVED CONTRACTION JOINTS, ½" IN DEPTH, SHALL BE TOOLED IN ALL EXPOSED FACES OF THE BARRIER RAIL AND IN ACCORDANCE WITH ARTICLE 825-10(B) OF THE STANDARD SPECIFICATIONS. THE CONTRACTION JOINT SHALL BE LOCATED AT EACH THIRD POINT BETWEEN BARRIER RAIL EXPANSION JOINTS. ONLY ONE CONTRACTION JOINT IS REQUIRED AT MIDPOINT OF BARRIER RAIL SEGMENTS LESS THAN 20 FEET IN LENGTH AND NO CONTRACTION JOINTS ARE REQUIRED FOR THOSE SEGMENTS LESS THAN 10 FEET IN LENGTH.

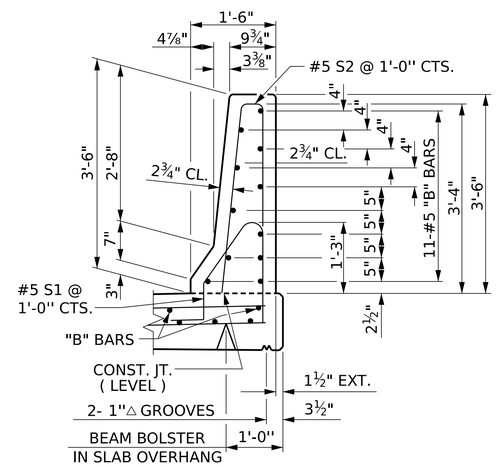

SECTION THRU RAIL

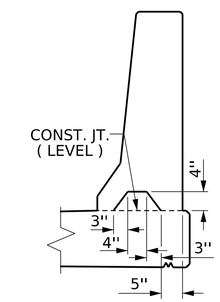

SECTION S-S

AT DAM IN OPEN JOINT
(THIS IS TO BE USED ONLY WHEN SLIP FORM IS USED)

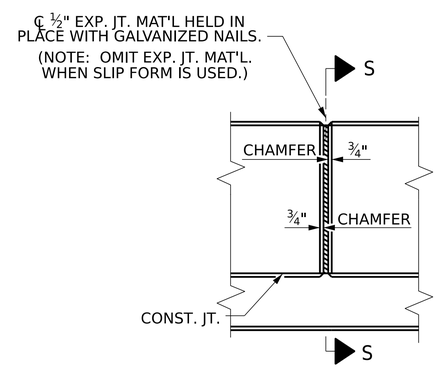

ELEVATION AT EXPANSION JOINTS

BARRIER RAIL DETAILS

BAR TYPES

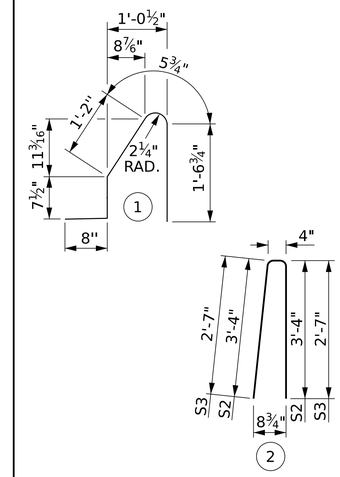

ALL BAR DIMENSIONS ARE OUT TO OUT

BILL OF MATERIAL

FOR CONCRETE BARRIER RAIL ONLY

BAR	NO.	SIZE	TYPE	LENGTH	WEIGHT
* B1	11	#5	STR	22'-2"	254
* B2	11	#5	STR	22'-4"	256
* B3	132	#5	STR	22'-7"	3109
* B4	11	#5	STR	24'-7"	282
* B5	11	#5	STR	24'-5"	280
* S1	372	#5	1	4'-7"	1746
* S2	360	#5	2	7'-0"	2628
* S3	8	#5	3	5'-6"	46

* EPOXY COATED REINFORCING STEEL	8,601 LBS.
CLASS AA CONCRETE	50.4 CU. YDS.
CONCRETE BARRIER RAIL	371.14 LIN. FT.

PROJECT NO. I-6011A

ROBESON COUNTY

STATION: 29+75.30 -L-

SHEET 2 OF 2

STATE OF NORTH CAROLINA
DEPARTMENT OF TRANSPORTATION
RALEIGH

STANDARD

CONCRETE BARRIER RAIL DETAILS

DOCUMENT NOT CONSIDERED FINAL UNLESS ALL SIGNATURES COMPLETED

NORTH CAROLINA PROFESSIONAL SEAL 46232 ENGINEER Santiago E. Aguilar

Signed by: Santiago E Aguilar
43B96A78EF64402...
5/14/2026

moffatt & nichol
4700 FALLS OF NEUSE ROAD, SUITE 300
RALEIGH, NORTH CAROLINA 27609
(919) 781-4626 VOICE (919) 781-4869 FAX
NC LICENSE NO.: F-0105

REVISIONS						SHEET NO.
NO.	BY:	DATE:	NO.	BY:	DATE:	S-20
1			3			TOTAL SHEETS
2			4			34

ASSEMBLED BY:	T. KIRSCHBAUM	DATE:	01/2026
CHECKED BY:	P. SHAW	DATE:	01/2026

DRAWN BY:	ARB	5/87	REV. 7/12	MAA/GM
CHECKED BY:	SJD	9/87	REV. 6/13	MAA/GM
			REV. 12/17	MAA/THC

5/13/2026
P:\RA\11125-02\20 CADD\I-6011A\Structures\01-CADD\I-6011A_Print File.dgn
tkirschbaum

Docusign Envelope ID: B51A3BFD-B61E-8A47-81F7-C89E23847CA8

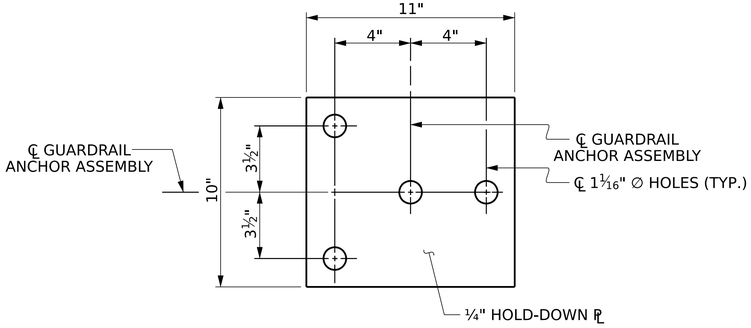

PLAN

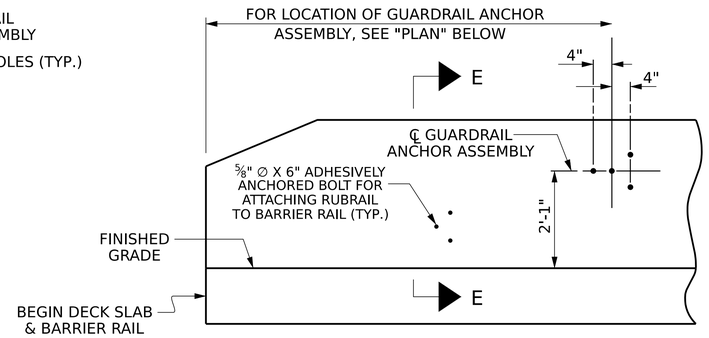

ELEVATION

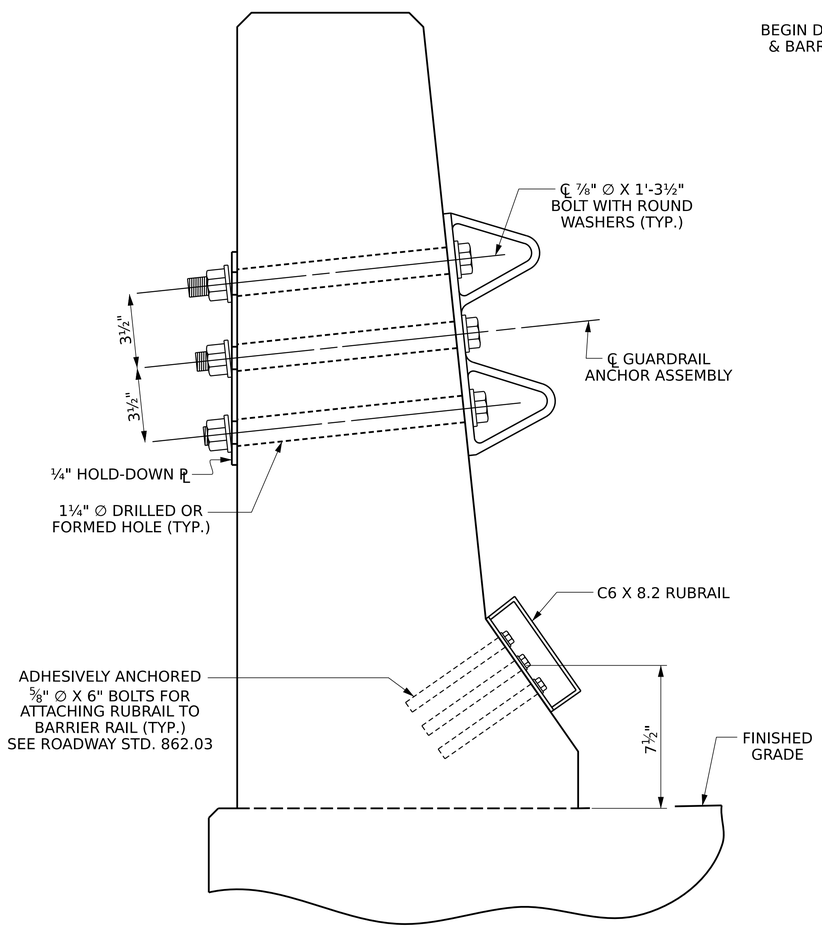

SECTION E-E

GUARDRAIL ANCHOR ASSEMBLY DETAILS

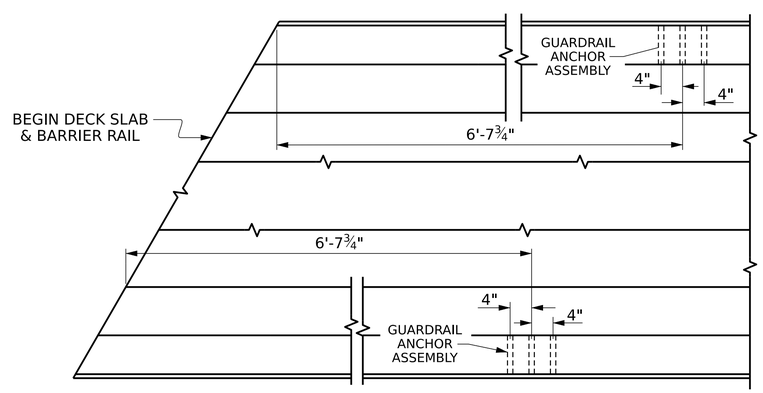

PLAN

LOCATION OF ANCHORS FOR GUARDRAIL

END BENT #1 SHOWN, END BENT #2 SIMILAR.

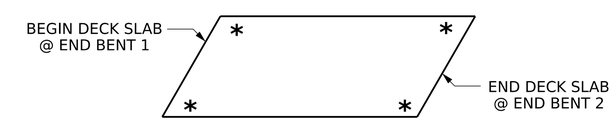

SKETCH SHOWING POINTS OF ATTACHMENTS

∗ DENOTES GUARDRAIL ANCHOR ASSEMBLY

NOTES

THE GUARDRAIL ANCHOR ASSEMBLY SHALL CONSIST OF A ¼" HOLD-DOWN PLATE AND 4 -⅞"∅ BOLTS WITH NUTS AND WASHERS, RUBRAIL, AND ADHESIVELY ANCHORED BOLTS.

THE HOLD-DOWN PLATE SHALL CONFORM TO AASHTO M270 GRADE 36. AFTER FABRICATION, THE HOLD-DOWN PLATE SHALL BE HOT-DIP GALVANIZED IN ACCORDANCE WITH AASHTO M111.

BOLTS SHALL CONFORM TO THE REQUIREMENTS OF ASTM A307 AND NUTS SHALL CONFORM TO THE REQUIREMENTS OF AASHTO M291. BOLTS, NUTS AND WASHERS SHALL BE GALVANIZED. (AT THE CONTRACTOR'S OPTION, STAINLESS STEEL BOLTS, NUTS AND WASHERS MAY BE USED AS AN ALTERNATE FOR THE ⅞" ∅ GALVANIZED BOLTS, NUTS AND WASHERS. THEY SHALL CONFORM TO OR EXCEED THE MECHANICAL REQUIREMENTS OF ASTM A307. THE USE OF THIS ALTERNATE SHALL BE APPROVED BY THE ENGINEER.)

THE GUARDRAIL ANCHOR ASSEMBLY IS REQUIRED AT ALL POINTS WHERE APPROACH GUARDRAIL IS TO BE ATTACHED TO THE END OF BARRIER RAIL. FOR POINTS OF ATTACHMENT, SEE SKETCH.

AFTER INSTALLATION, THE EXPOSED THREAD OF THE BOLT SHALL BE BURRED WITH A SHARP POINTED TOOL.

THE COST OF THE GUARDRAIL ANCHOR ASSEMBLY SHALL BE INCLUDED IN THE UNIT CONTRACT PRICE BID FOR CONCRETE BARRIER RAIL.

THE 1¼'' ∅ HOLES SHALL BE FORMED OR DRILLED WITH A CORE BIT. IMPACT TOOLS WILL NOT BE PERMITTED. ANY CONCRETE DAMAGED BY THIS WORK SHALL BE REPAIRED TO THE SATISFACTION OF THE ENGINEER.

THE C6 X 8.2 RUBRAIL IS TO BE ADHESIVELY ANCHORED TO THE RAIL USING THREE ⅝" ∅ X 6" BOLTS WITH WASHERS. LEVEL ONE FIELD TESTING IS REQUIRED, AND THE YIELD LOAD OF THE ⅝" ∅ BOLT IS 12 KIPS. FOR ADHESIVELY ANCHORED ANCHOR BOLTS OR DOWELS, SEE STANDARD SPECIFICATIONS. SEE ROADWAY STANDARD 862.03 FOR DETAILS AND LOCATION OF THE RUBRAIL.

PROJECT NO. I-6011A
ROBESON COUNTY
STATION: 29+75.30 -L-

STATE OF NORTH CAROLINA
DEPARTMENT OF TRANSPORTATION
RALEIGH
STANDARD

GUARDRAIL ANCHORAGE FOR BARRIER RAIL

ASSEMBLED BY: T. KIRSCHBAUM	DATE: 01/2026
CHECKED BY: P. SHAW	DATE: 01/2026

DRAWN BY:	TLA	5/06	REV. 6/13	MAA/GM
CHECKED BY:	GM	5/06	REV. 12/17	MAA/THC
			REV. 6/22	BNB/AAI

moffatt & nichol
4700 FALLS OF NEUSE ROAD, SUITE 300
RALEIGH, NORTH CAROLINA 27609
(919) 781-4626 VOICE (919) 781-4869 FAX
NC LICENSE NO.: F-0105

DOCUMENT NOT CONSIDERED FINAL UNLESS ALL SIGNATURES COMPLETED

NORTH CAROLINA PROFESSIONAL SEAL 46232 ENGINEER Santiago E. Aguilar

Signed by: Santiago E Aguilar
43B96A78EF64402...
5/14/2026

REVISIONS							SHEET NO.
NO.	BY:	DATE:	NO.	BY:	DATE:		S-21
1			3				TOTAL SHEETS
2			4				34

STD. NO. GRA2 (SHT 1b)

5/13/2026
P:\RA\11125-0220 CADD\I-6011A\Structures\01-CADD\I-6011A_Print File.dgn
kirschbaum

Docusign Envelope ID: B51A3BFD-B61E-8A47-81F7-C89E23847CA8

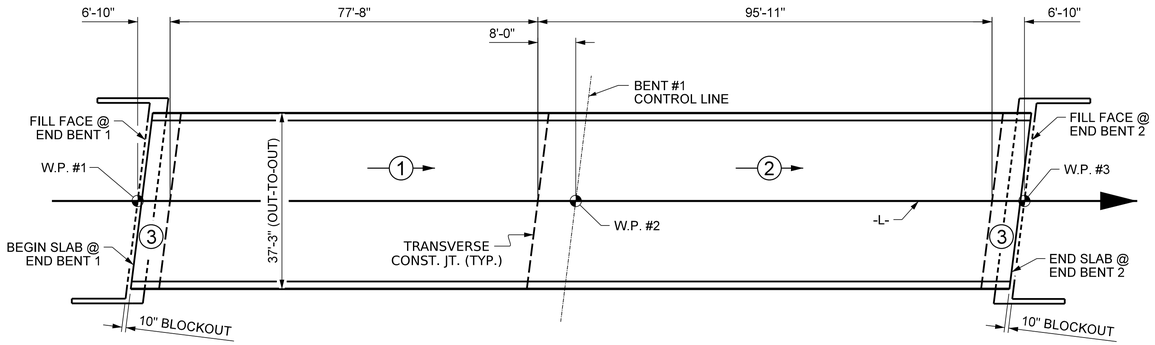

KEY

(#) → = INDICATES POUR NUMBER AND DIRECTION OF POUR

POURING SEQUENCE

POURS CANNOT BE STARTED UNTIL ADJACENT POURS REACH A MINIMUM OF 3000 PSI.

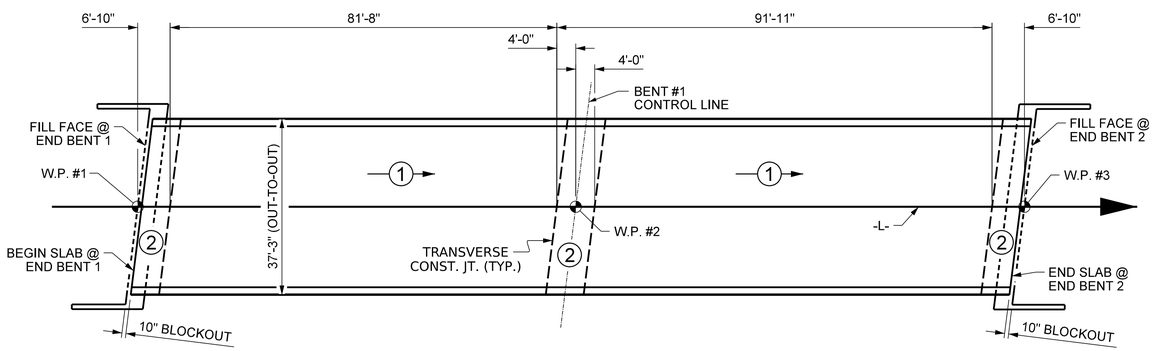

KEY

(#) → = INDICATES POUR NUMBER AND DIRECTION OF POUR

OPTIONAL POURING SEQUENCE

POUR 2 CANNOT BE STARTED UNTIL POUR 1 REACHES A MINIMUM OF 3000 PSI.

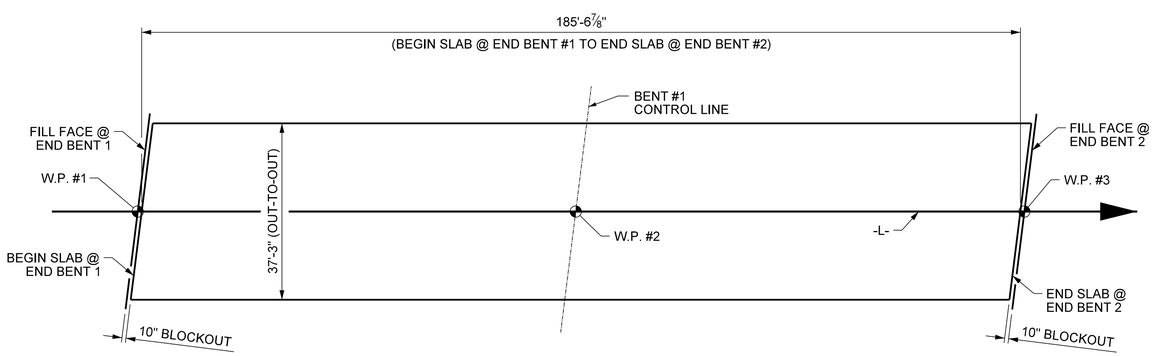

LAYOUT FOR COMPUTING AREA REINFORCED CONCRETE DECK SLAB (SQ. FT. = 6,913)

BILL OF MATERIAL

BAR	NO.	SIZE	TYPE	LENGTH	WEIGHT
* A1	395	#5	STR	36'-11"	15,209
A2	395	#5	STR	36'-11"	15,209
* A101	2	#5	STR	33'-5"	70
* A102	2	#5	STR	29'-9"	62
* A103	2	#5	STR	26'-1"	54
* A104	2	#5	STR	22'-4"	47
* A105	2	#5	STR	18'-8"	39
* A106	2	#5	STR	15'-0"	31
* A107	2	#5	STR	11'-4"	24
* A108	2	#5	STR	7'-8"	16
* A109	2	#5	STR	4'-0"	8
A201	2	#5	STR	33'-5"	70
A202	2	#5	STR	29'-9"	62
A203	2	#5	STR	26'-1"	54
A204	2	#5	STR	22'-4"	47
A205	2	#5	STR	18'-8"	39
A206	2	#5	STR	15'-0"	31
A207	2	#5	STR	11'-4"	24
A208	2	#5	STR	7'-8"	16
A209	2	#5	STR	4'-0"	8
* B1	50	#4	STR	40'-0"	1,336
* B2	25	#5	STR	23'-0"	600
* B3	50	#6	STR	18'-4"	1,377
* B4	25	#5	STR	14'-3"	372
* B5	25	#5	STR	55'-6"	1,447
* B6	50	#6	STR	28-2"	2,115
* B7	25	#5	STR	24'-7"	641
* B8	50	#5	STR	18'-10"	982
B9	208	#5	STR	47'-10"	10,377
K1	20	#4	STR	24'-10"	332
K2	6	#4	STR	7'-6"	30
K3	24	#4	STR	8'-0"	128
K4	24	#4	STR	9'-0"	144
K5	4	#4	STR	5'-2"	14
K6	8	#4	STR	5'-5"	29
K7	8	#4	STR	5'-11"	32
K8	20	#4	STR	2'-6"	33
K9	6	#4	STR	6'-4"	25
K10	5	#4	STR	29'-8"	99
* S1	56	#4	1	11'-11"	446
* S2	56	#4	1	10'-6"	393
S3	96	#4	2	2'-9"	176
S4	6	#4	3	11'-8"	47
S5	18	#4	3	13'-0"	156
U1	60	#4	4	11'-11"	478
U2	12	#4	4	13'-11"	112

* DENOTES EPOXY COATED REINFORCEMENT

BAR TYPES

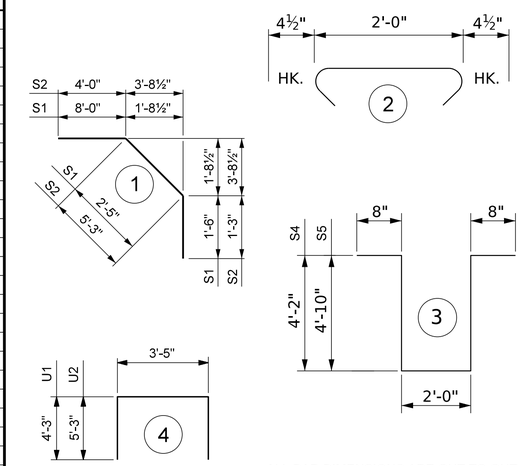

ALL BAR DIMENSIONS ARE OUT TO OUT

SUPERSTRUCTURE BILL OF MATERIAL

	CLASS AA CONCRETE	REINFORCING STEEL	* EPOXY COATED REINFORCING STEEL
	(CU. YDS.)	(LBS.)	(LBS.)
POUR 1	82.0		
POUR 2	116.3		
POUR 3	67.1		
TOTALS * *	265.4	27,772	25,269

* * QUANTITIES FOR CONCRETE BARRIER RAIL NOT INCLUDED

GROOVING BRIDGE FLOORS

APPROACH SLABS	899	SQ.FT.
BRIDGE DECK	5,753	SQ.FT.
TOTAL	6,652	SQ.FT.

SUPERSTRUCTURE REINFORCING STEEL LENGTHS ARE BASED ON THE FOLLOWING MINIMUM SPLICE LENGTHS

BAR SIZE	SUPERSTRUCTURE EXCEPT APPROACH SLABS, PARAPETS, AND BARRIER RAILS		APPROACH SLABS		PARAPETS AND BARRIER RAILS
	EPOXY COATED	UNCOATED	EPOXY COATED	UNCOATED	
#4	1'-11"	1'-7"	1'-11"	1'-7"	2'-6"
#5	2'-5"	2'-0"	2'-5"	2'-0"	3'-1"
#6	2'-10"	2'-5"	3'-7"	2'-5"	3'-8"
#7	4'-2"	2'-9"			
#8	4'-9"	3'-2"			

PROJECT NO. I-6011A

ROBESON COUNTY

STATION: 29+75.30 -L-

STATE OF NORTH CAROLINA
DEPARTMENT OF TRANSPORTATION
RALEIGH

SUPERSTRUCTURE BILL OF MATERIAL

DOCUMENT NOT CONSIDERED FINAL UNLESS ALL SIGNATURES COMPLETED

NORTH CAROLINA PROFESSIONAL SEAL 46232 ENGINEER Santiago E. Aguilar

Signed by: Santiago E Aguilar
438996A7BEF64402
5/14/2026

moffatt & nichol
4700 FALLS OF NEUSE ROAD, SUITE 300
RALEIGH, NORTH CAROLINA 27609
(919) 781-4626 VOICE (919) 781-4869 FAX
NC LICENSE NO.: F-0105

REVISIONS								SHEET NO.
NO.	BY:	DATE:	NO.	BY:	DATE:			S-22
1			3					TOTAL SHEETS
2			4					34

DRAWN BY :	T. KIRSCHBAUM	DATE :	01/2026
CHECKED BY :	P. SHAW	DATE :	01/2026
DESIGN ENGINEER OF RECORD:	S. AGUILAR	DATE :	02/2026

5/13/2026
P:\RA\11125-00\20 CADD\I-6011A\Structures\01-CADD\I-6011A_Print File.dgn
tkirschbaum

Docusign Envelope ID: B51A3BFD-B61E-8A47-81F7-C89E23847CA8

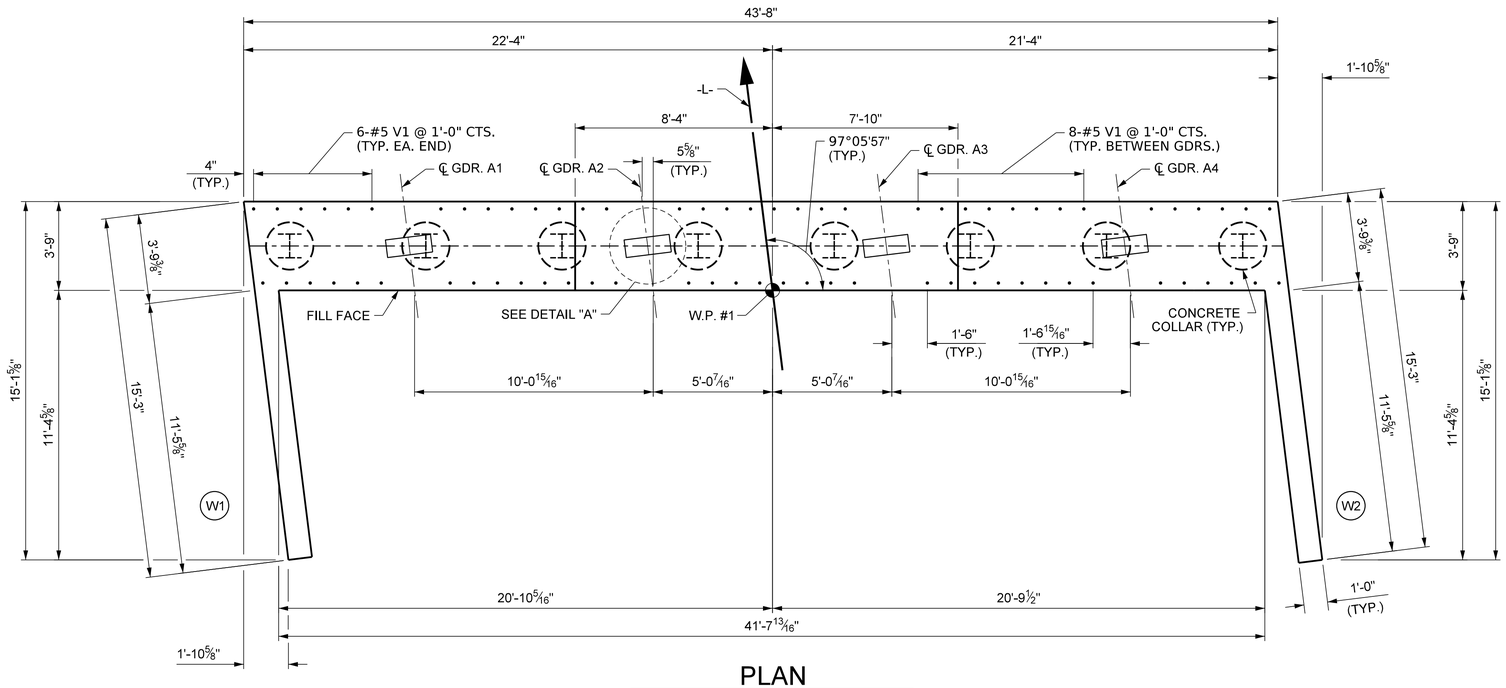

PLAN

NOTES:

STIRRUPS IN CAP MAY BE SHIFTED AS NECESSARY TO CLEAR #5 V1 BARS.

SEE THE SUPERSTRUCTURE SHEETS FOR UPPER PART OF THE INTEGRAL END BENT DETAIL.

THE TOP SURFACE OF THE END BENT CAP AND WINGS, EXCLUDING THE BEARING AREA, SHALL BE RAKED TO A DEPTH OF ¼".

FOR SECTIONS A-A & B-B, SEE SHEET 3 OF 3.

FOR "CORROSION PROTECTION FOR STEEL PILES DETAIL", SEE SHEET 3 OF 3.

FOR PILE SPLICE DETAILS, SEE SHEET 3 OF 3.

FOR TEMPORARY DRAINAGE AT END BENT, SEE SHEET 3 OF 3.

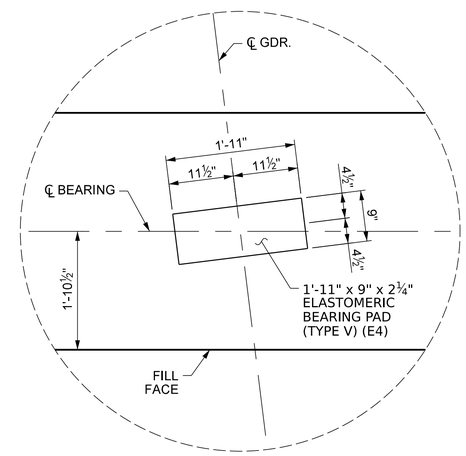

DETAIL "A"

(TYP. EA. GIRDER)

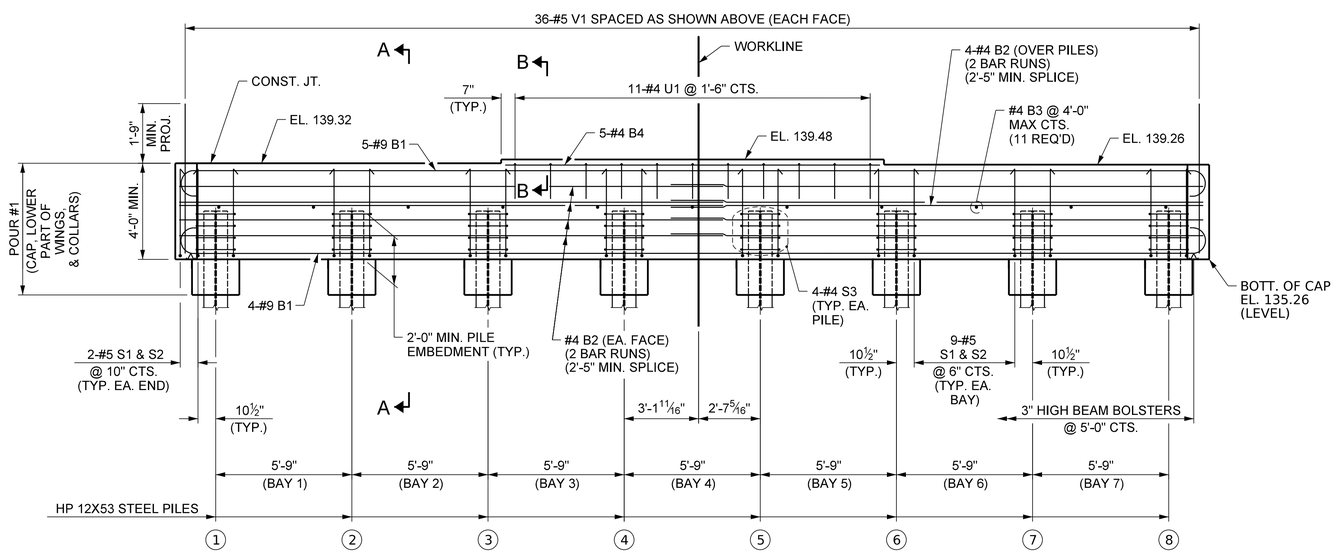

ELEVATION

(REINFORCING IN WING NOT SHOWN FOR CLARITY)

PROJECT NO. I-6011A

ROBESON COUNTY

STATION: 29+75.30 -L-

SHEET 1 OF 3

STATE OF NORTH CAROLINA
DEPARTMENT OF TRANSPORTATION
RALEIGH

SUBSTRUCTURE

INTEGRAL END BENT 1

DOCUMENT NOT CONSIDERED FINAL UNLESS ALL SIGNATURES COMPLETED

NORTH CAROLINA PROFESSIONAL ENGINEER SEAL 46232 Santiago E. Aguilar

Signed by: Santiago E Aguilar
43B96A78EF64402...
5/14/2026

moffatt & nichol
4700 FALLS OF NEUSE ROAD, SUITE 300
RALEIGH, NORTH CAROLINA 27609
(919) 781-4626 VOICE (919) 781-4869 FAX
NC LICENSE NO.: F-0105

REVISIONS						SHEET NO.
NO.	BY:	DATE:	NO.	BY:	DATE:	S-23
1			3			TOTAL SHEETS
2			4			34

DRAWN BY :	T. KIRSCHBAUM	DATE :	01/2026
CHECKED BY :	P. SHAW	DATE :	01/2026
DESIGN ENGINEER OF RECORD:	S. AGUILAR	DATE :	02/2026

5/13/2026
P:\RA\11125-0020 CADD\I-6011A\Structures\01-CADD\I-6011A_Print File.dgn
tkirschbaum

Docusign Envelope ID: B51A3BFD-B61E-8A47-81F7-C89E23847CA8

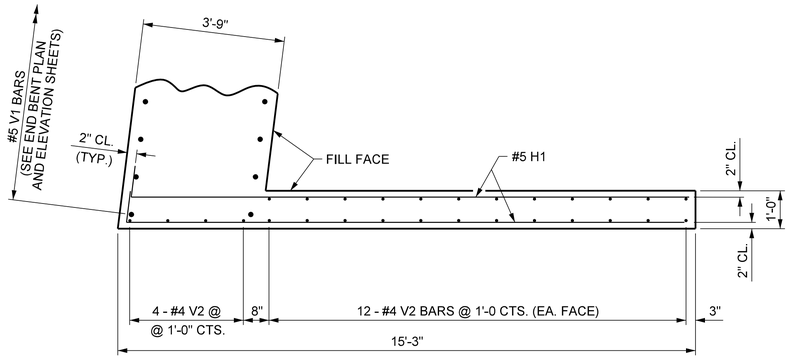

PLAN OF WING W1

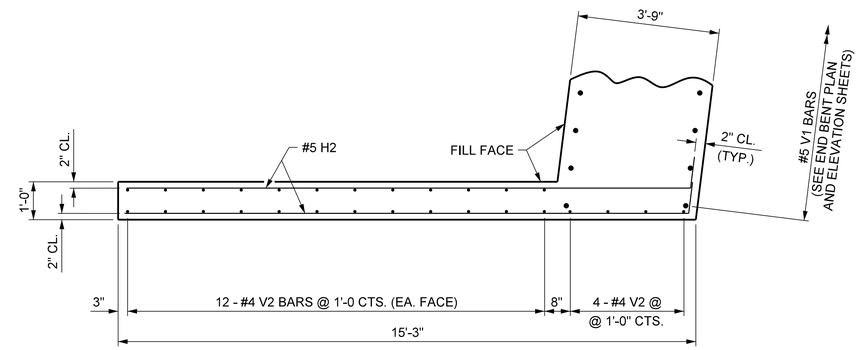

PLAN OF WING W2

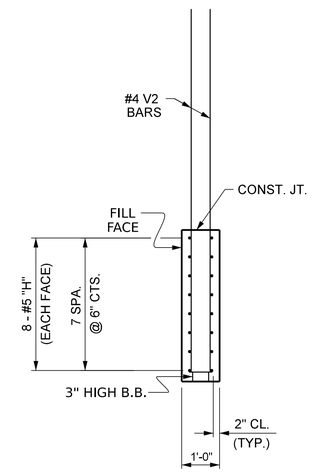

SECTION X-X

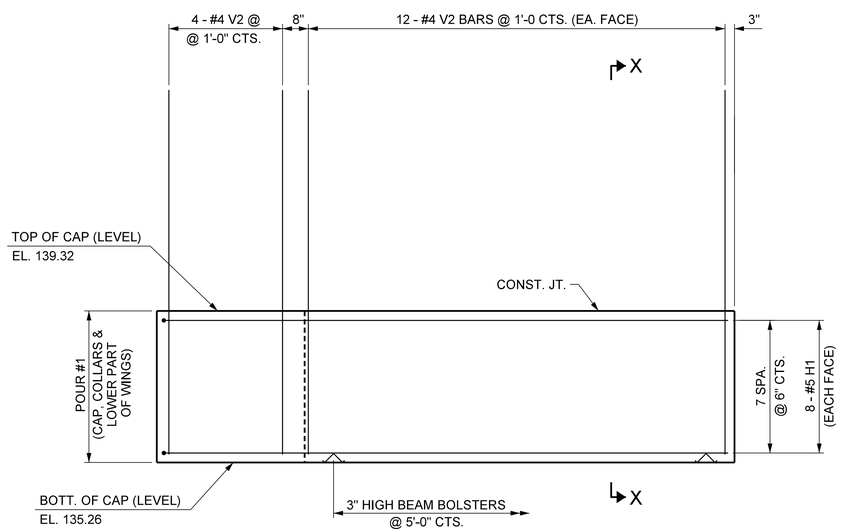

ELEVATION OF WING W1

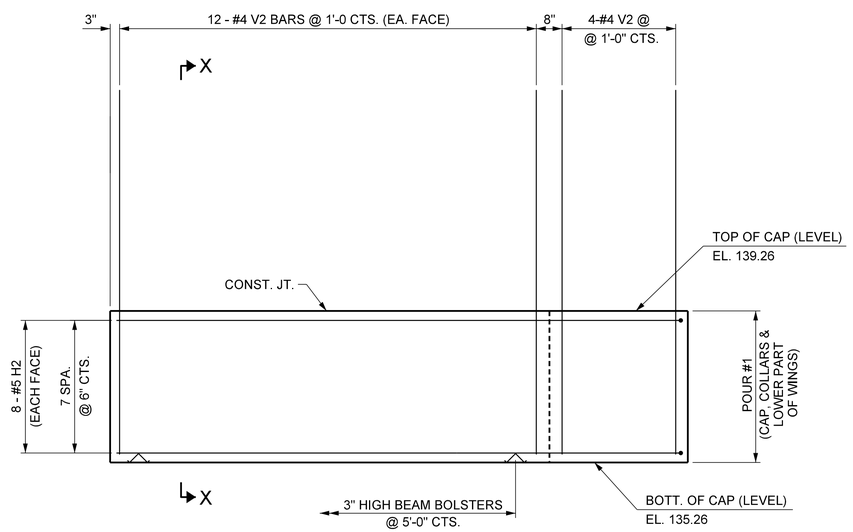

ELEVATION OF WING W2

PROJECT NO. I-6011A

ROBESON COUNTY

STATION: 29+75.30 -L-

SHEET 2 OF 3

STATE OF NORTH CAROLINA
DEPARTMENT OF TRANSPORTATION
RALEIGH

SUBSTRUCTURE

END BENT 1
WING DETAILS

DOCUMENT NOT CONSIDERED FINAL UNLESS ALL SIGNATURES COMPLETED

NORTH CAROLINA PROFESSIONAL SEAL 46232 ENGINEER Santiago E. Aguilar

Signed by: Santiago E Aguilar
43B96A78EF64402...
5/14/2026

REVISIONS						
NO.	BY:	DATE:	NO.	BY:	DATE:	
1			3			
2			4			

SHEET NO. S-24

TOTAL SHEETS 34

WING DETAILS

DRAWN BY : T. KIRSCHBAUM DATE : 01/2026
CHECKED BY : P. SHAW DATE : 01/2026
DESIGN ENGINEER OF RECORD: S. AGUILAR DATE : 02/2026

moffatt & nichol
4700 FALLS OF NEUSE ROAD, SUITE 300
RALEIGH, NORTH CAROLINA 27609
(919) 781-4626 VOICE (919) 781-4869 FAX
NC LICENSE NO.: F-0105

5/14/2026

5/13/2026
P:\RA\11125-0220 CADD\I-6011A\Structures\01-CADD\I-6011A_Print File.dgn
tkirschbaum

Docusign Envelope ID: B51A3BFD-B61E-8A47-81F7-C89E23847CA8

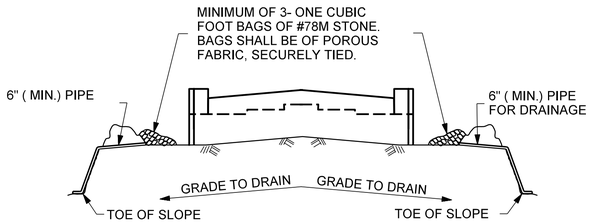

BAGGED STONE AND PIPE SHALL BE PLACED IMMEDIATELY AFTER COMPLETION OF END BENT EXCAVATION. PIPE MAY BE EITHER CONCRETE, CORRUGATED STEEL, CORRUGATED ALUMINUM ALLOY, OR CORRUGATED PLASTIC. PERFORATED PIPE WILL NOT BE ALLOWED.

BAGGED STONE SHALL REMAIN IN PLACE UNTIL THE ENGINEER DIRECTS THAT IT BE REMOVED. THE CONTRACTOR SHALL REMOVE AND DISPOSE OF SILT ACCUMULATIONS AT BAGGED STONE WHEN SO DIRECTED BY THE ENGINEER. BAGS SHALL BE REMOVED AND REPLACED WHENEVER THE ENGINEER DETERMINES THAT THEY HAVE DETERIORATED AND LOST THEIR EFFECTIVENESS.

NO SEPARATE PAYMENT WILL BE MADE FOR THIS WORK AND THE ENTIRE COST OF THIS WORK SHALL BE INCLUDED IN THE UNIT CONTRACT PRICE BID FOR THE SEVERAL PAY ITEMS.

TEMPORARY DRAINAGE AT END BENT

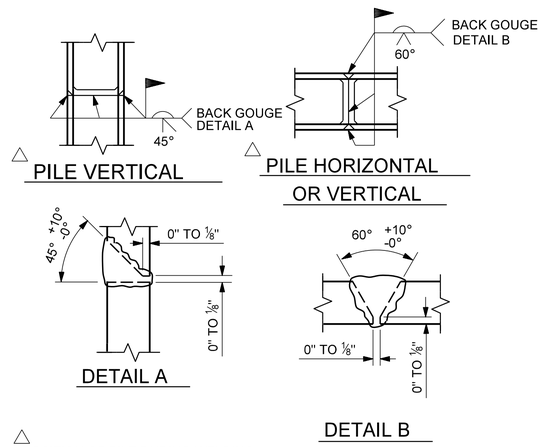

PILE SPLICE DETAILS

BAR TYPES

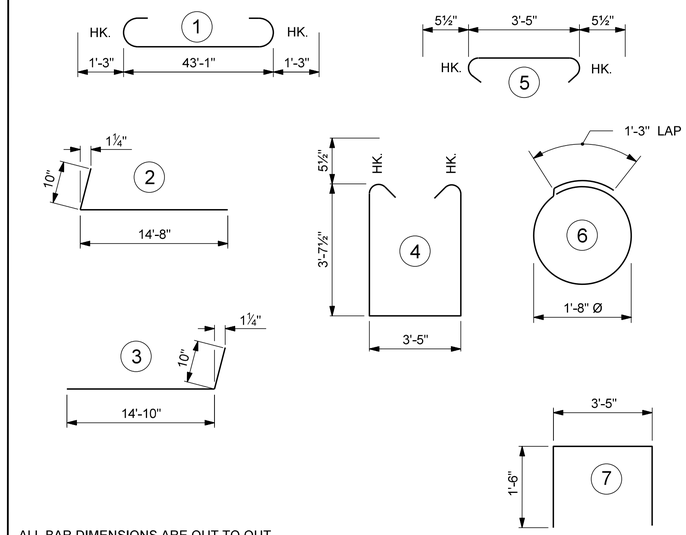

ALL BAR DIMENSIONS ARE OUT TO OUT.

BILL OF MATERIAL

END BENT 1

BAR	NO.	SIZE	TYPE	LENGTH	WEIGHT
B1	9	#9	1	45'-7"	1,395
B2	24	#4	STR	22'-11"	367
B3	11	#4	STR	3'-5"	25
B4	5	#4	STR	15'-10"	53
H1	38	#5	2	15'-6"	614
H2	38	#5	3	15'-8"	621
S1	67	#5	4	11'-7"	809
S2	67	#5	5	4'-4"	303
S3	32	#4	6	6'-6"	139
U1	11	#4	7	6'-5"	47
V1	72	#5	STR	5'-10"	438
V2	56	#4	STR	9'-3"	346

REINFORCING STEEL 5,157 LBS.

CLASS A CONCRETE BREAKDOWN

POUR #1	CAP, COLLARS & LOWER PART OF WINGS	29.7 C.Y.
POUR #2	UPPER PART OF WINGS	4.7 C.Y.
TOTAL CLASS A CONCRETE		34.4 C.Y.

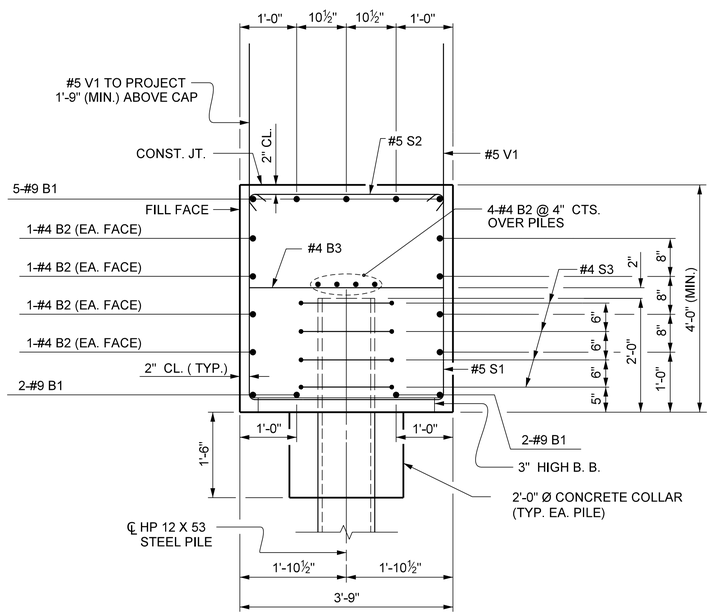

SECTION A-A

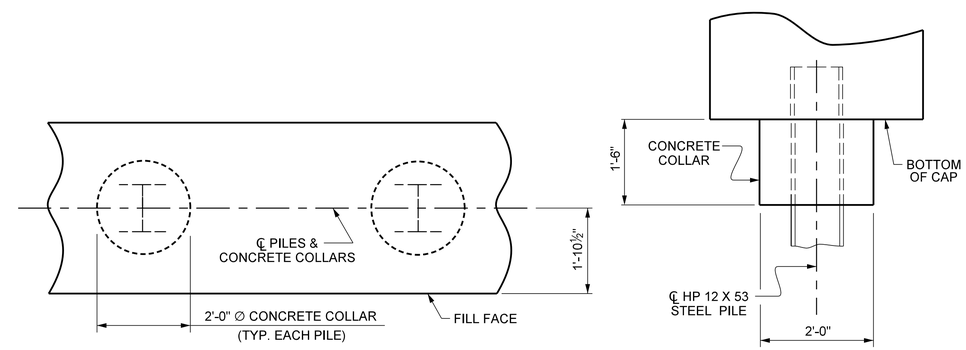

CORROSION PROTECTION FOR STEEL PILES DETAIL

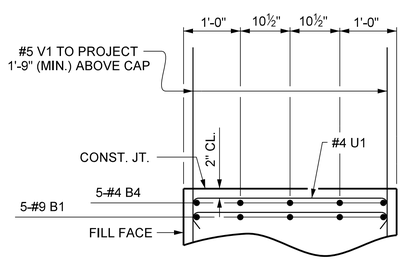

PARTIAL SECTION B-B

SEE SECTION A-A FOR INFORMATION NOT SHOWN IN THIS SECTION

PROJECT NO. I-6011A

ROBESON COUNTY

STATION: 29+75.30 -L-

SHEET 3 OF 3

STATE OF NORTH CAROLINA
DEPARTMENT OF TRANSPORTATION
RALEIGH

SUBSTRUCTURE

END BENT 1 DETAILS

DOCUMENT NOT CONSIDERED FINAL UNLESS ALL SIGNATURES COMPLETED

NORTH CAROLINA PROFESSIONAL SEAL 46232 ENGINEER Santiago E. Aguilar

Signed by: Santiago E Aguilar
43B96A78EF64402...
5/14/2026

moffatt & nichol
4700 FALLS OF NEUSE ROAD, SUITE 300
RALEIGH, NORTH CAROLINA 27609
(919) 781-4626 FAX (919) 781-4869
NC LICENSE NO.: F-0105

REVISIONS						SHEET NO.
NO.	BY:	DATE:	NO.	BY:	DATE:	S-25
1			3			TOTAL SHEETS
2			4			34

DRAWN BY :	T. KIRSCHBAUM	DATE :	01/2026
CHECKED BY :	P. SHAW	DATE :	01/2026
DESIGN ENGINEER OF RECORD:	S. AGUILAR	DATE :	02/2026

5/13/2026
P:\RA\I11125-0220 CADD\I-6011A\Structures\01-CADD\I-6011A_Print File.dgn
tkirschbaum

Docusign Envelope ID: B51A3BFD-B61E-8A47-81F7-C89E23847CA8

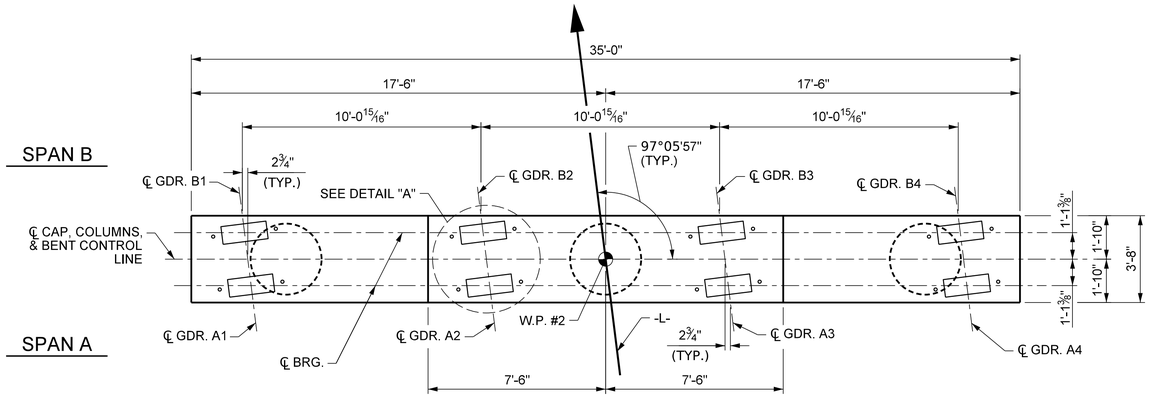

PLAN

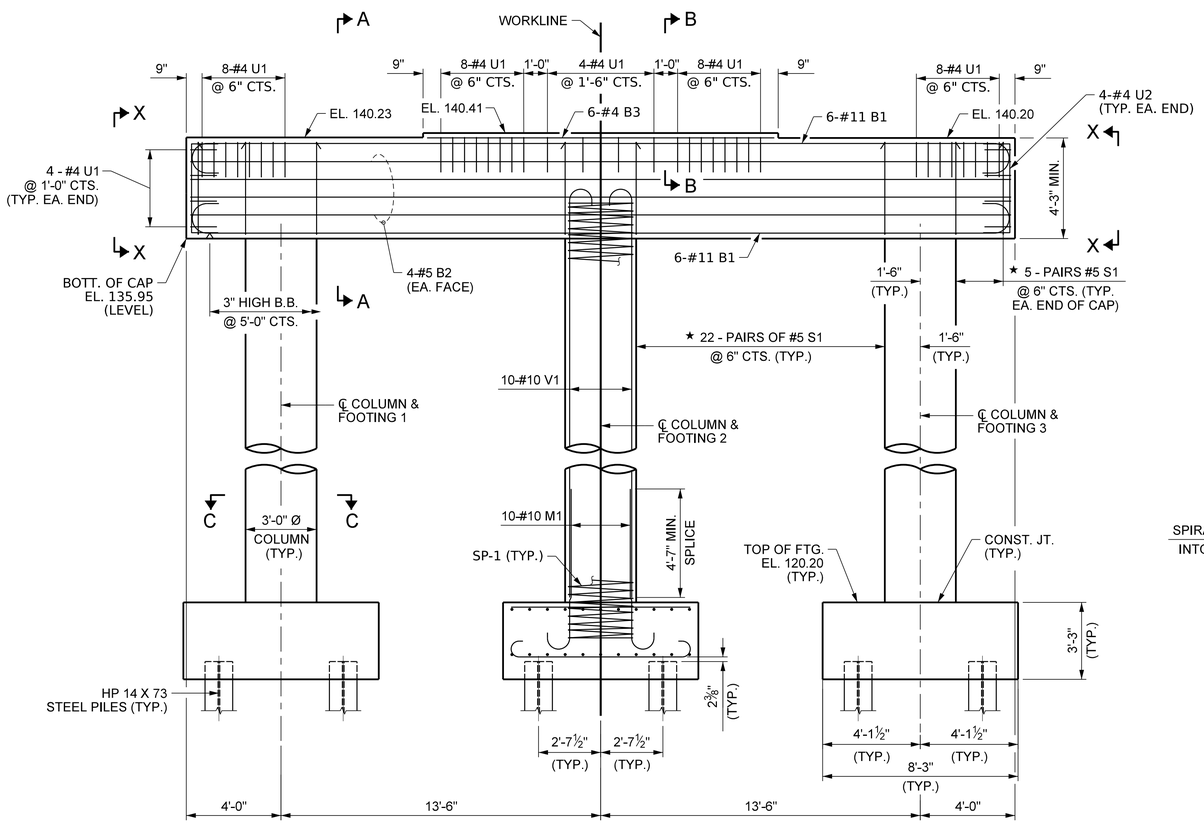

ELEVATION

DIMENSIONS & REINFORCING STEEL ARE TYPICAL FOR EACH COLUMN & FOOTING UNLESS OTHERWISE NOTED.

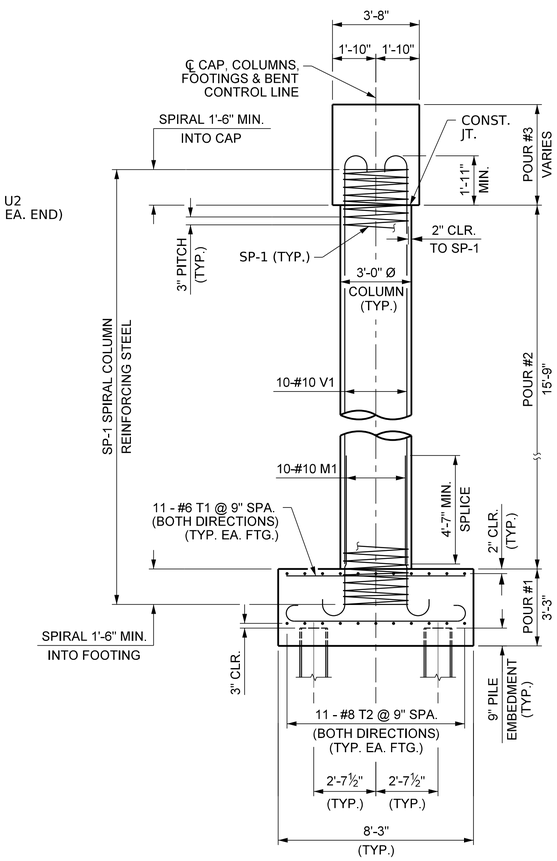

END ELEVATION

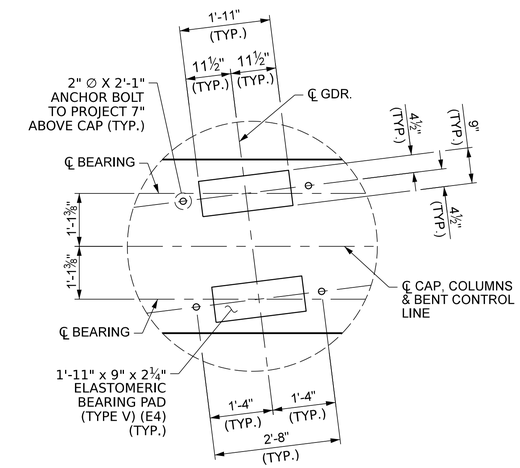

DETAIL "A"

(TYP. EACH GIRDER)

NOTES:

STIRRUPS AND "U" BARS IN CAP MAY BE SHIFTED AS NECESSARY TO CLEAR ANCHOR BOLTS.

HOOKS ON "V" BARS MAY BE TURNED AS NECESSARY FOR PLACING REINFORCING STEEL.

★ INVERT ALTERNATE STIRRUPS.

FOR SECTION A-A, SECTION C-C AND PARTIAL SECTION B-B, SEE SHEET 2 OF 2.

FOR END VIEW X-X, SEE SHEET 2 OF 2.

FOR PILE SPLICE DETAIL. SEE SHEET 2 OF 2.

PROJECT NO. I-6011A

ROBESON COUNTY

STATION: 29+75.30 -L-

SHEET 1 OF 2

STATE OF NORTH CAROLINA
DEPARTMENT OF TRANSPORTATION
RALEIGH

SUBSTRUCTURE

BENT 1

DRAWN BY :	T. KIRSCHBAUM	DATE :	01/2026
CHECKED BY :	P. SHAW	DATE :	01/2026
DESIGN ENGINEER OF RECORD:	S. AGUILAR	DATE :	02/2026

moffatt & nichol
4700 FALLS OF NEUSE ROAD, SUITE 300
RALEIGH, NORTH CAROLINA 27609
(919) 781-4626 VOICE (919) 781-4869 FAX
NC LICENSE NO.: F-0105

DOCUMENT NOT CONSIDERED FINAL UNLESS ALL SIGNATURES COMPLETED

NORTH CAROLINA PROFESSIONAL SEAL 46232 ENGINEER Santiago E. Aguilar

Signed by: Santiago E Aguilar
43B96A78BF64402...
5/14/2026

REVISIONS								SHEET NO.
NO.	BY:	DATE:	NO.	BY:	DATE:			S-26
1			3					TOTAL SHEETS
2			4					34

5/13/2026
P:\RA\11125-0220 CADD\I-6011A\Structures\01-CADD\I-6011A_Print File.dgn
tkirschbaum

Docusign Envelope ID: B51A3BFD-B61E-8A47-81F7-C89E23847CA8

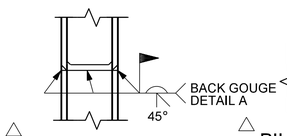

△ PILE VERTICAL

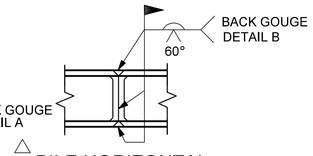

△ PILE HORIZONTAL OR VERTICAL

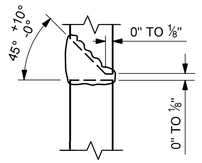

DETAIL A

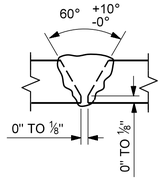

DETAIL B

△ POSITION OF PILE DURING WELDING.

PILE SPLICE DETAILS

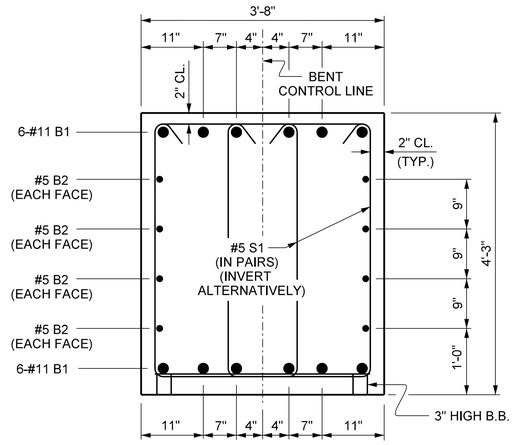

SECTION A-A

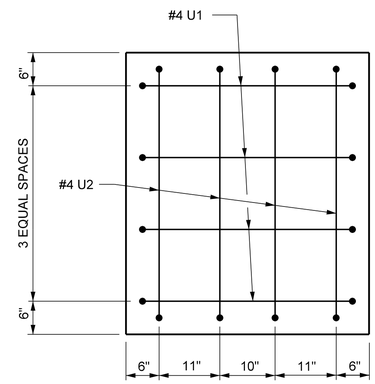

END VIEW X-X

(TYPICAL BOTH ENDS)

BAR TYPES

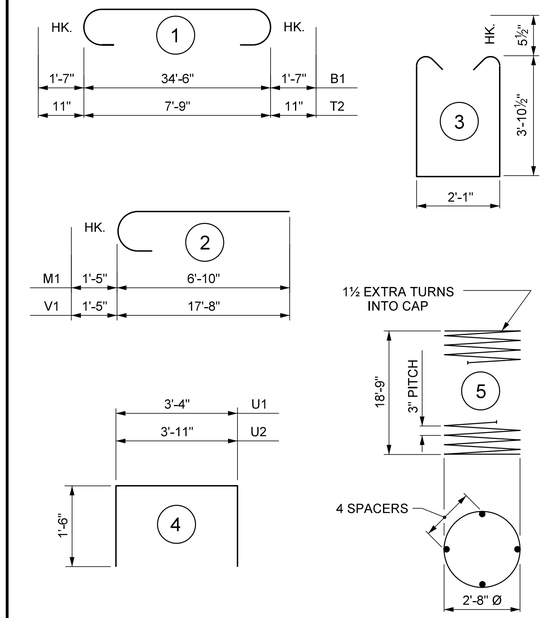

ALL BAR DIMENSIONS ARE OUT-TO-OUT.

BILL OF MATERIAL

BENT 1

BAR	NO.	SIZE	TYPE	LENGTH	WEIGHT
B1	12	#11	1	37'-8"	2,401
B2	8	#5	STR	34'-8"	289
B3	6	#4	STR	14'-8"	59
M1	30	#10	STR	8'-3"	1,065
S1	108	#5	3	10'-9"	1,211
T1	66	#6	STR	7'-9"	768
T2	66	#8	1	9'-7"	1,689
U1	44	#4	4	6'-4"	186
U2	8	#4	4	6'-11"	37
V1	30	#10	2	19'-1"	2,463

REINFORCING STEEL 10,168 LBS.

BAR	NO.	SIZE	TYPE	LENGTH	WEIGHT
SP-1	3	*	5	645'-5"	2,020

SPIRAL COLUMN REINFORCING STEEL 2,020 LBS.

* THE SP-1 SPIRAL REINFORCING STEEL SHALL BE W31 OR D-31 COLD DRAWN WIRE OR #5 PLAIN OR DEFORMED BAR

CLASS A CONCRETE

POUR #1 (FOOTINGS)	24.6 C.Y.
POUR #2 (COLUMNS)	12.4 C.Y.
POUR #3 (CAP)	20.7 C.Y.
TOTAL CLASS A CONCRETE	57.7 C.Y.

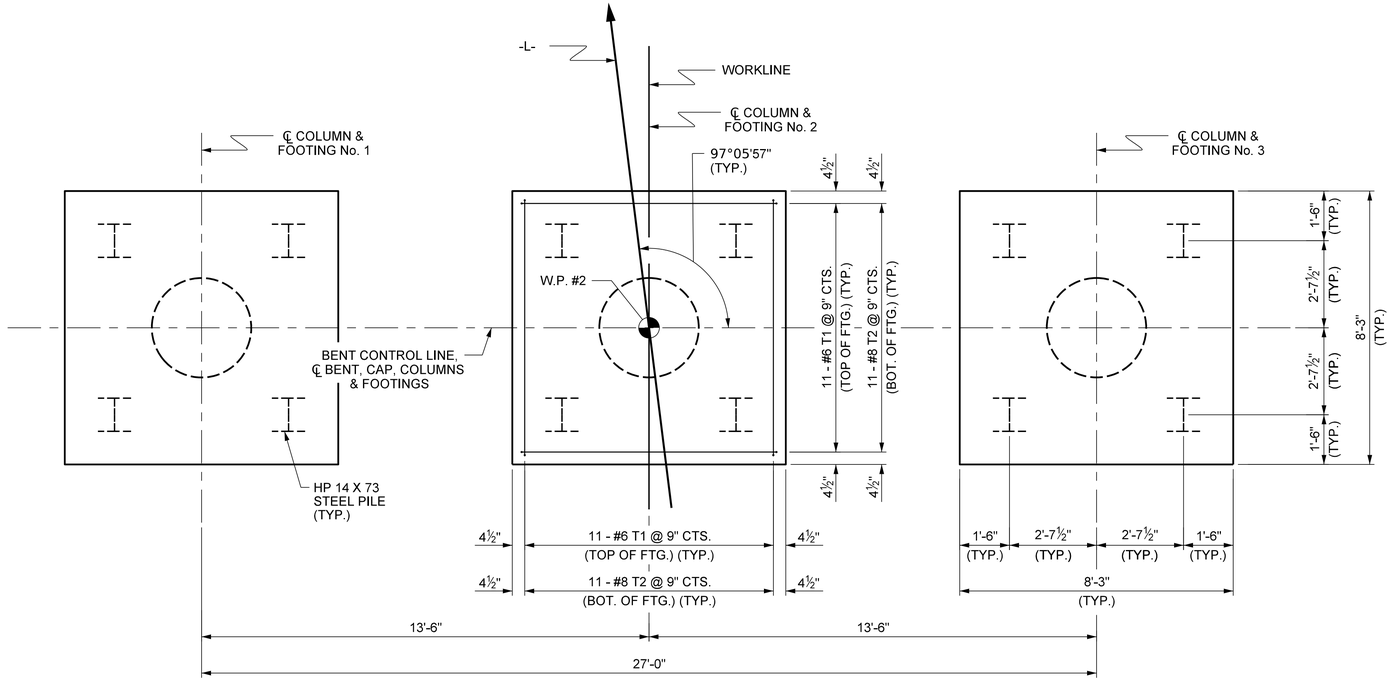

PLAN OF COLUMNS & FOOTINGS

DIMENSIONS & REINFORCING STEEL ARE TYPICAL FOR EACH COLUMN & FOOTING UNLESS OTHERWISE NOTED.

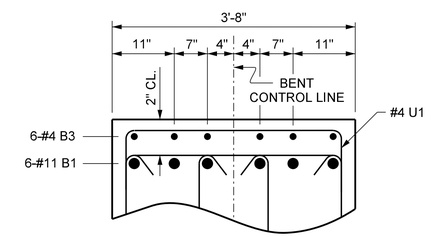

PARTIAL SECTION B-B

SEE SECTION A-A FOR INFORMATION NOT SHOWN IN THIS SECTION

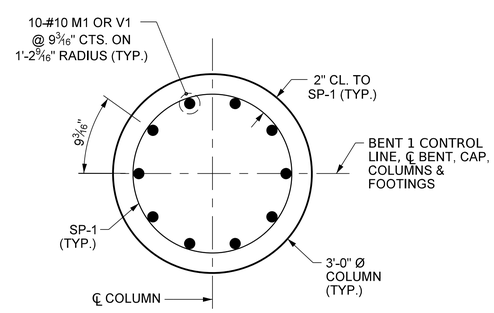

SECTION C-C

(TYPICAL EA. COLUMN)

PROJECT NO. I-6011A

ROBESON COUNTY

STATION: 29+75.30 -L-

SHEET 2 OF 2

STATE OF NORTH CAROLINA
DEPARTMENT OF TRANSPORTATION
RALEIGH

SUBSTRUCTURE

BENT 1 DETAILS

DOCUMENT NOT CONSIDERED FINAL UNLESS ALL SIGNATURES COMPLETED

NORTH CAROLINA PROFESSIONAL SEAL 46232 ENGINEER Santiago E. Aguilar

Signed by: Santiago E Aguilar
43B96A78EF64402...
5/14/2026

moffatt & nichol
4700 FALLS OF NEUSE ROAD, SUITE 300
RALEIGH, NORTH CAROLINA 27609
(919) 781-4626 VOICE (919) 781-4869 FAX
NC LICENSE NO.: F-0105

REVISIONS						
NO.	BY:	DATE:	NO.	BY:	DATE:	
1			3			
2			4			

SHEET NO. S-27

TOTAL SHEETS 34

DRAWN BY :	T. KIRSCHBAUM	DATE :	01/2026
CHECKED BY :	P. SHAW	DATE :	01/2026
DESIGN ENGINEER OF RECORD:	S. AGUILAR	DATE :	02/2026

5/13/2026
P:\RA\11125-0020 CADD\I-6011A\Structures\01-CADD\I-6011A_Print File.dgn
tkirschbaum

Docusign Envelope ID: B51A3BFD-B61E-8A47-81F7-C89E23847CA8

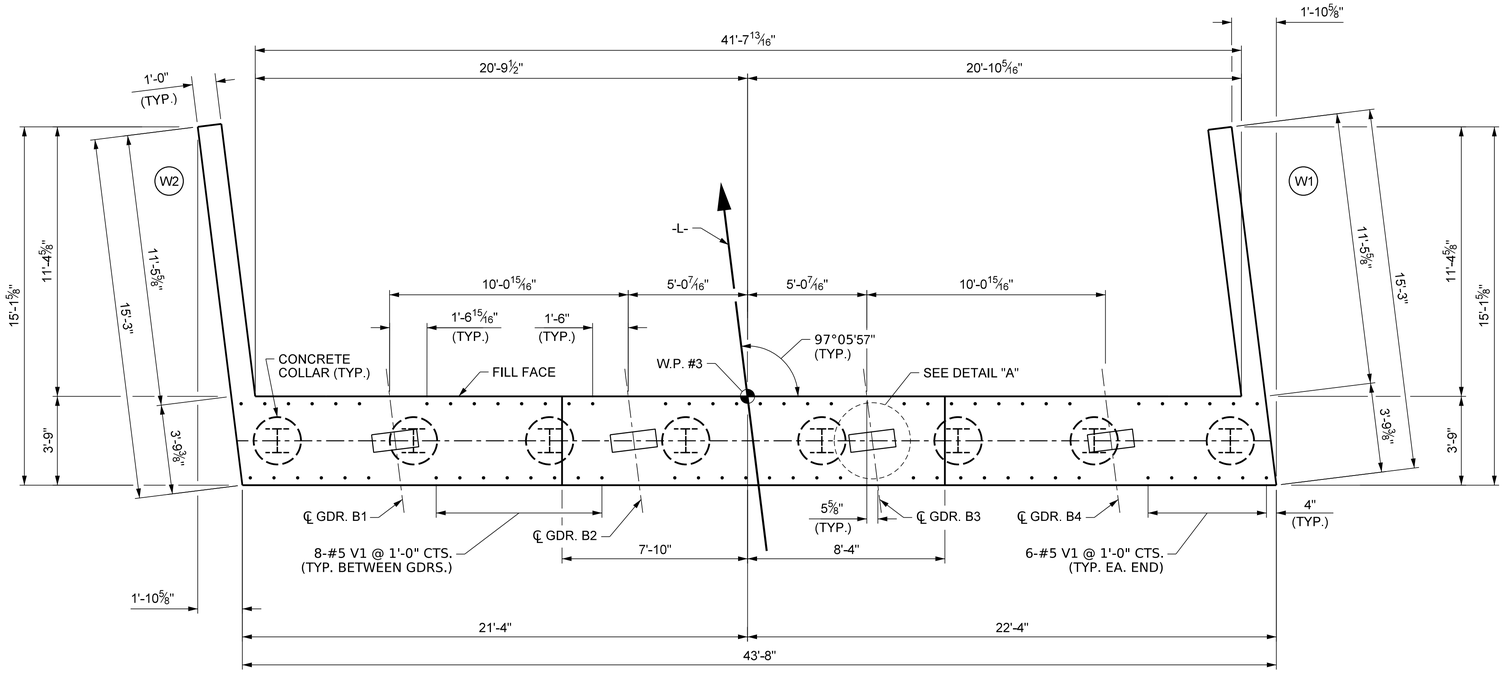

PLAN

NOTES:

STIRRUPS IN CAP MAY BE SHIFTED AS NECESSARY TO CLEAR #5 V1 BARS.

SEE THE SUPERSTRUCTURE SHEETS FOR UPPER PART OF THE INTEGRAL END BENT DETAIL.

THE TOP SURFACE OF THE END BENT CAP AND WINGS, EXCLUDING THE BEARING AREA, SHALL BE RAKED TO A DEPTH OF ¼".

FOR SECTIONS A-A & B-B, SEE SHEET 3 OF 3.

FOR "CORROSION PROTECTION FOR STEEL PILES DETAIL", SEE SHEET 3 OF 3.

FOR PILE SPLICE DETAILS, SEE SHEET 3 OF 3.

FOR TEMPORARY DRAINAGE AT END BENT, SEE SHEET 3 OF 3.

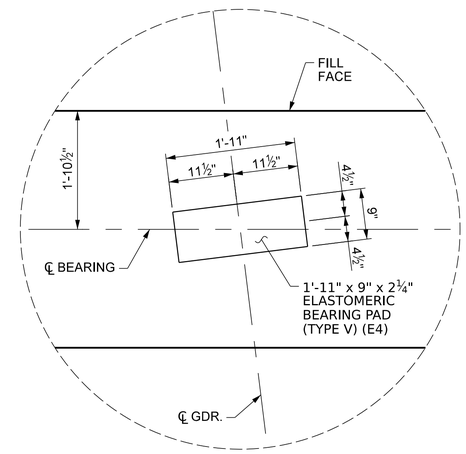

DETAIL "A"

(TYP. EA. GIRDER)

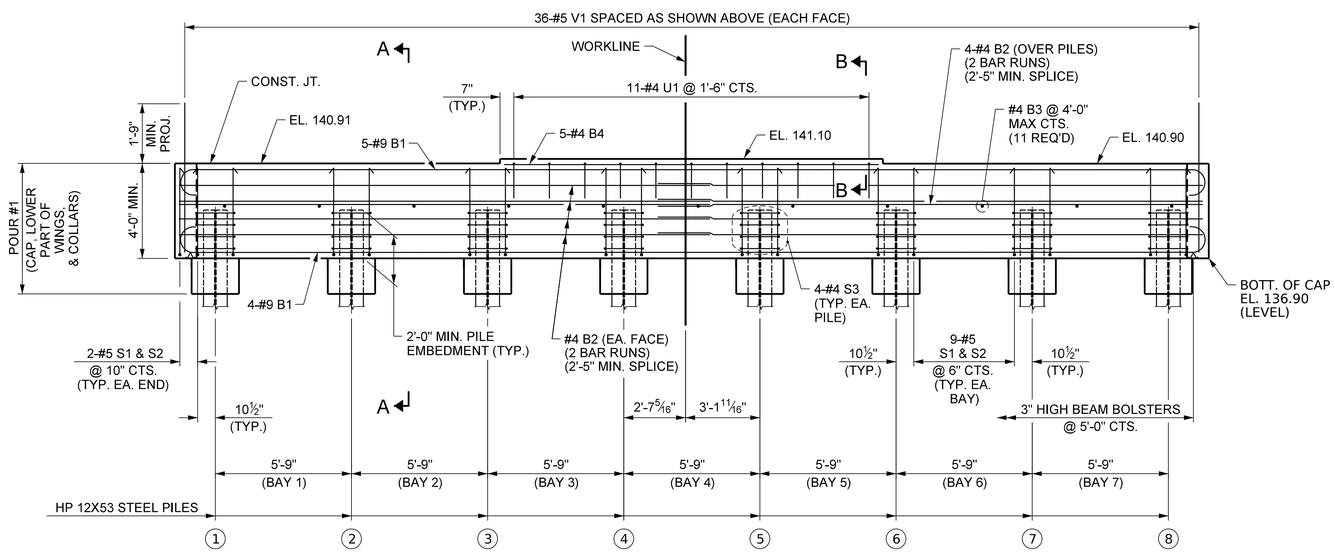

ELEVATION

(REINFORCING IN WING NOT SHOWN FOR CLARITY)

PROJECT NO. I-6011A

ROBESON COUNTY

STATION: 29+75.30 -L-

SHEET 1 OF 3

STATE OF NORTH CAROLINA
DEPARTMENT OF TRANSPORTATION
RALEIGH

SUBSTRUCTURE

INTEGRAL END BENT 2

DOCUMENT NOT CONSIDERED FINAL UNLESS ALL SIGNATURES COMPLETED

NORTH CAROLINA PROFESSIONAL SEAL 46232 ENGINEER Santiago E. Aguilar

Signed by: Santiago E. Aguilar
43B96A78EF94402...
5/14/2026

moffatt & nichol
4700 FALLS OF NEUSE ROAD, SUITE 300
RALEIGH, NORTH CAROLINA 27609
(919) 781-4626 VOICE (919) 781-4869 FAX
NC LICENSE NO.: F-0105

REVISIONS						SHEET NO.
NO.	BY:	DATE:	NO.	BY:	DATE:	S-28
1			3			TOTAL SHEETS
2			4			34

DRAWN BY :	T. KIRSCHBAUM	DATE :	01/2026
CHECKED BY :	P. SHAW	DATE :	01/2026
DESIGN ENGINEER OF RECORD:	S. AGUILAR	DATE :	02/2026

5/13/2026
P:\RA\11125-02\20 CADD\I-6011A\Structures\01-CADD\I-6011A_Print File.dgn
tkirschbaum

Docusign Envelope ID: B51A3BFD-B61E-8A47-81F7-C89E23847CA8

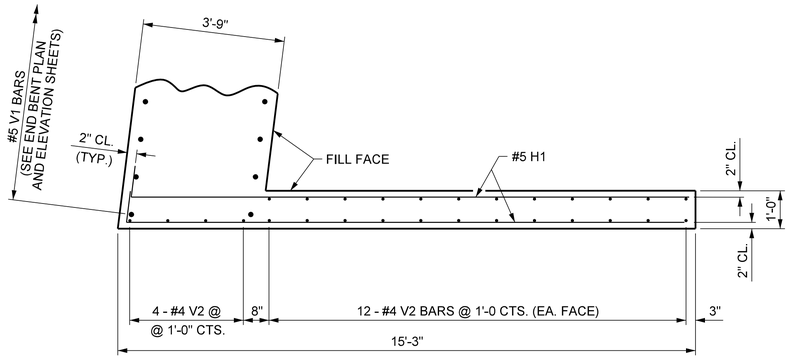

PLAN OF WING W1

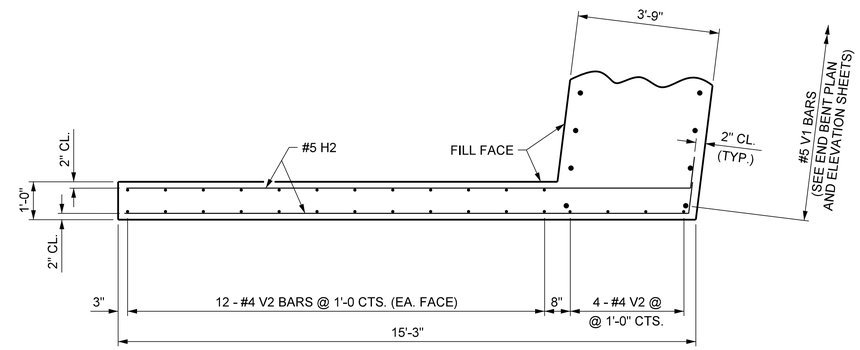

PLAN OF WING W2

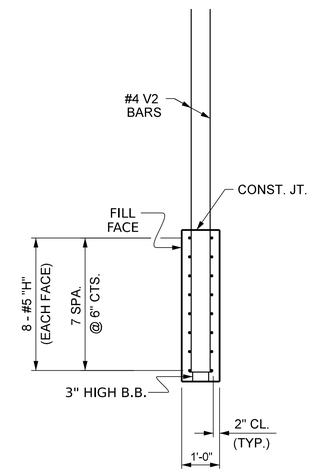

SECTION X-X

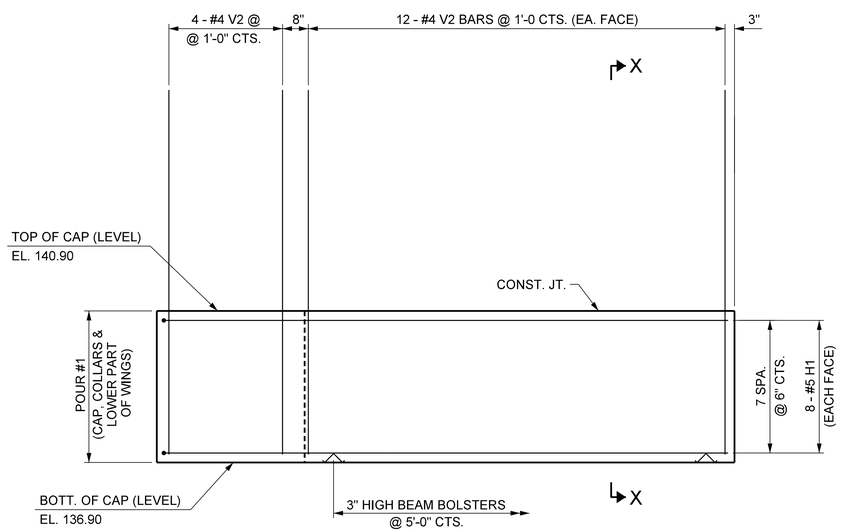

ELEVATION OF WING W1

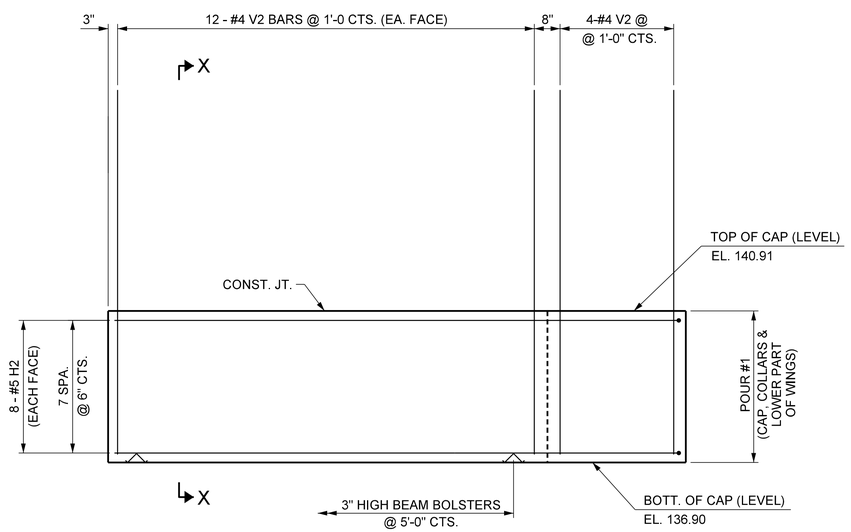

ELEVATION OF WING W2

PROJECT NO. I-6011A

ROBESON COUNTY

STATION: 29+75.30 -L-

SHEET 2 OF 3

STATE OF NORTH CAROLINA
DEPARTMENT OF TRANSPORTATION
RALEIGH

SUBSTRUCTURE

END BENT 2
WING DETAILS

DOCUMENT NOT CONSIDERED FINAL UNLESS ALL SIGNATURES COMPLETED

NORTH CAROLINA PROFESSIONAL SEAL 46232 ENGINEER Santiago E. Aguilar

Signed by: Santiago E Aguilar
43B96A78EF64402...
5/14/2026

REVISIONS						
NO.	BY:	DATE:	NO.	BY:	DATE:	
1			3			
2			4			

SHEET NO. S-29

TOTAL SHEETS 34

WING DETAILS

DRAWN BY :	T. KIRSCHBAUM	DATE :	01/2026
CHECKED BY :	P. SHAW	DATE :	01/2026
DESIGN ENGINEER OF RECORD:	S. AGUILAR	DATE :	02/2026

moffatt & nichol
4700 FALLS OF NEUSE ROAD, SUITE 300
RALEIGH, NORTH CAROLINA 27609
(919) 781-4626 VOICE (919) 781-4869 FAX
NC LICENSE NO.: F-0105

5/13/2026
P:\RA\11125-0220 CADD\I-6011A\Structures\01-CADD\I-6011A_Print File.dgn
tkirschbaum

Docusign Envelope ID: B51A3BFD-B61E-8A47-81F7-C89E23847CA8

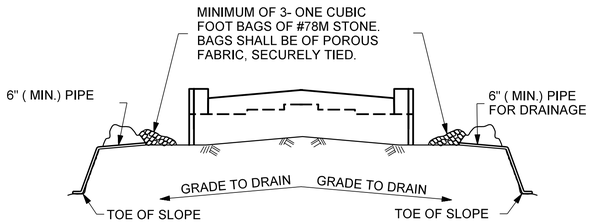

BAGGED STONE AND PIPE SHALL BE PLACED IMMEDIATELY AFTER COMPLETION OF END BENT EXCAVATION. PIPE MAY BE EITHER CONCRETE, CORRUGATED STEEL, CORRUGATED ALUMINUM ALLOY, OR CORRUGATED PLASTIC. PERFORATED PIPE WILL NOT BE ALLOWED.

BAGGED STONE SHALL REMAIN IN PLACE UNTIL THE ENGINEER DIRECTS THAT IT BE REMOVED. THE CONTRACTOR SHALL REMOVE AND DISPOSE OF SILT ACCUMULATIONS AT BAGGED STONE WHEN SO DIRECTED BY THE ENGINEER. BAGS SHALL BE REMOVED AND REPLACED WHENEVER THE ENGINEER DETERMINES THAT THEY HAVE DETERIORATED AND LOST THEIR EFFECTIVENESS.

NO SEPARATE PAYMENT WILL BE MADE FOR THIS WORK AND THE ENTIRE COST OF THIS WORK SHALL BE INCLUDED IN THE UNIT CONTRACT PRICE BID FOR THE SEVERAL PAY ITEMS.

TEMPORARY DRAINAGE AT END BENT

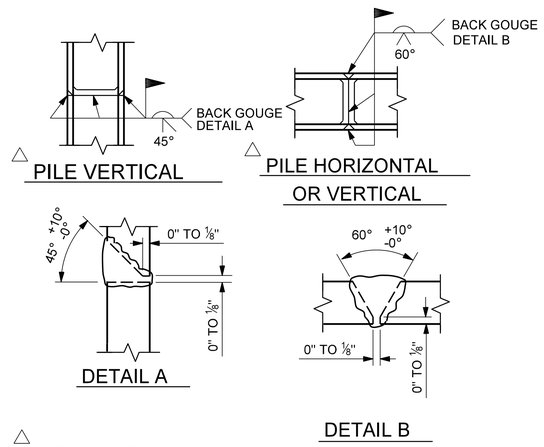

PILE SPLICE DETAILS

BAR TYPES

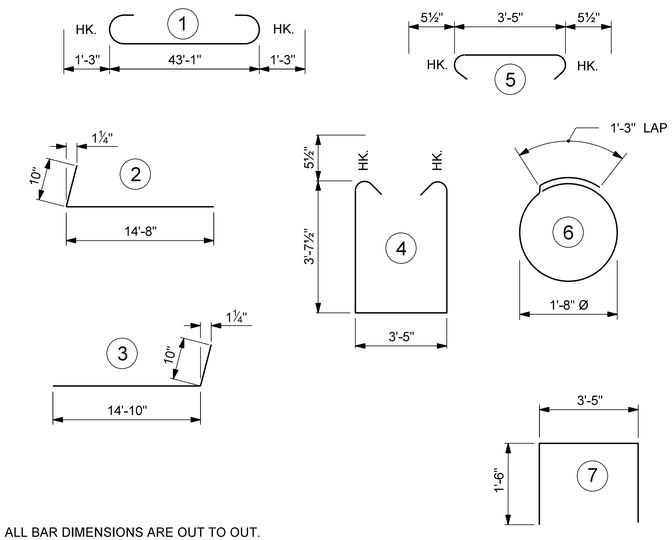

ALL BAR DIMENSIONS ARE OUT TO OUT.

BILL OF MATERIAL

END BENT 2

BAR	NO.	SIZE	TYPE	LENGTH	WEIGHT
B1	9	#9	1	45'-7"	1,395
B2	24	#4	STR	22'-11"	367
B3	11	#4	STR	3'-5"	25
B4	5	#4	STR	15'-10"	53
H1	38	#5	2	15'-6"	614
H2	38	#5	3	15'-8"	621
S1	67	#5	4	11'-7"	809
S2	67	#5	5	4'-4"	303
S3	32	#4	6	6'-6"	139
U1	11	#4	7	6'-5"	47
V1	72	#5	STR	5'-10"	438
V2	56	#4	STR	9'-3"	346

REINFORCING STEEL 5,157 LBS.

CLASS A CONCRETE BREAKDOWN

POUR #1	CAP, COLLARS & LOWER PART OF WINGS	29.7 C.Y.
POUR #2	UPPER PART OF WINGS	4.8 C.Y.
TOTAL CLASS A CONCRETE		34.5 C.Y.

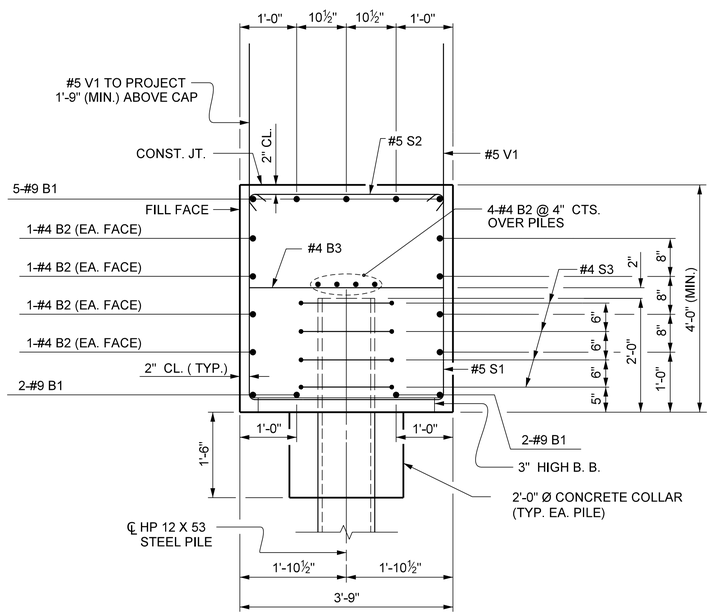

SECTION A-A

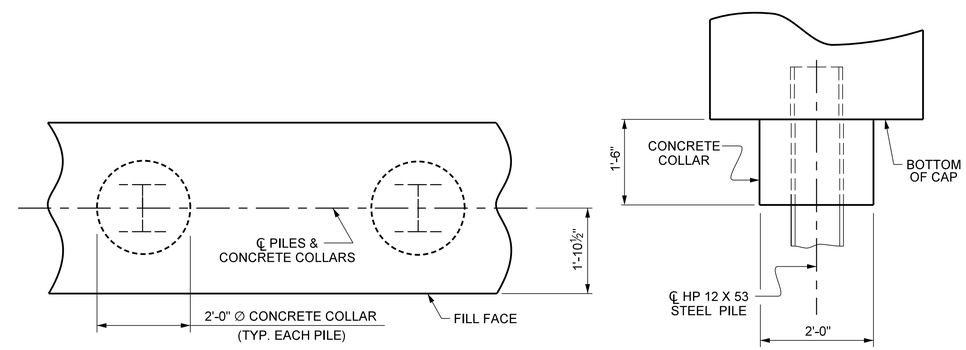

CORROSION PROTECTION FOR STEEL PILES DETAIL

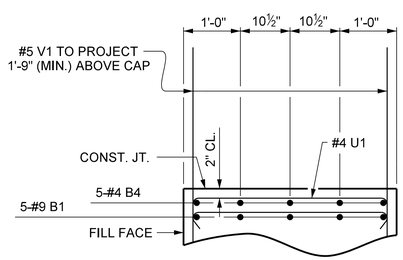

PARTIAL SECTION B-B

SEE SECTION A-A FOR INFORMATION NOT SHOWN IN THIS SECTION

PROJECT NO. I-6011A

ROBESON COUNTY

STATION: 29+75.30 -L-

SHEET 3 OF 3

STATE OF NORTH CAROLINA
DEPARTMENT OF TRANSPORTATION
RALEIGH

SUBSTRUCTURE

END BENT 2 DETAILS

DOCUMENT NOT CONSIDERED FINAL UNLESS ALL SIGNATURES COMPLETED

NORTH CAROLINA PROFESSIONAL SEAL 46232 ENGINEER Santiago E. Aguilar

Signed by: Santiago E Aguilar
43B96A78EF64402...
5/14/2026

moffatt & nichol
4700 FALLS OF NEUSE ROAD, SUITE 300
RALEIGH, NORTH CAROLINA 27609
(919) 781-4626 NORTH CAROLINA 27609 -4869 FAX
NC LICENSE NO.: F-0105

REVISIONS						SHEET NO.
NO.	BY:	DATE:	NO.	BY:	DATE:	S-30
1			3			TOTAL SHEETS
2			4			34

DRAWN BY :	T. KIRSCHBAUM	DATE :	01/2026
CHECKED BY :	P. SHAW	DATE :	01/2026
DESIGN ENGINEER OF RECORD:	S. AGUILAR	DATE :	02/2026

5/13/2026
P:\RA\1125-0220 CADD\I-6011A\Structures\01-CADD\I-6011A_Print File.dgn
tkirschbaum

Docusign Envelope ID: B51A3BFD-B61E-8A47-81F7-C89E23847CA8

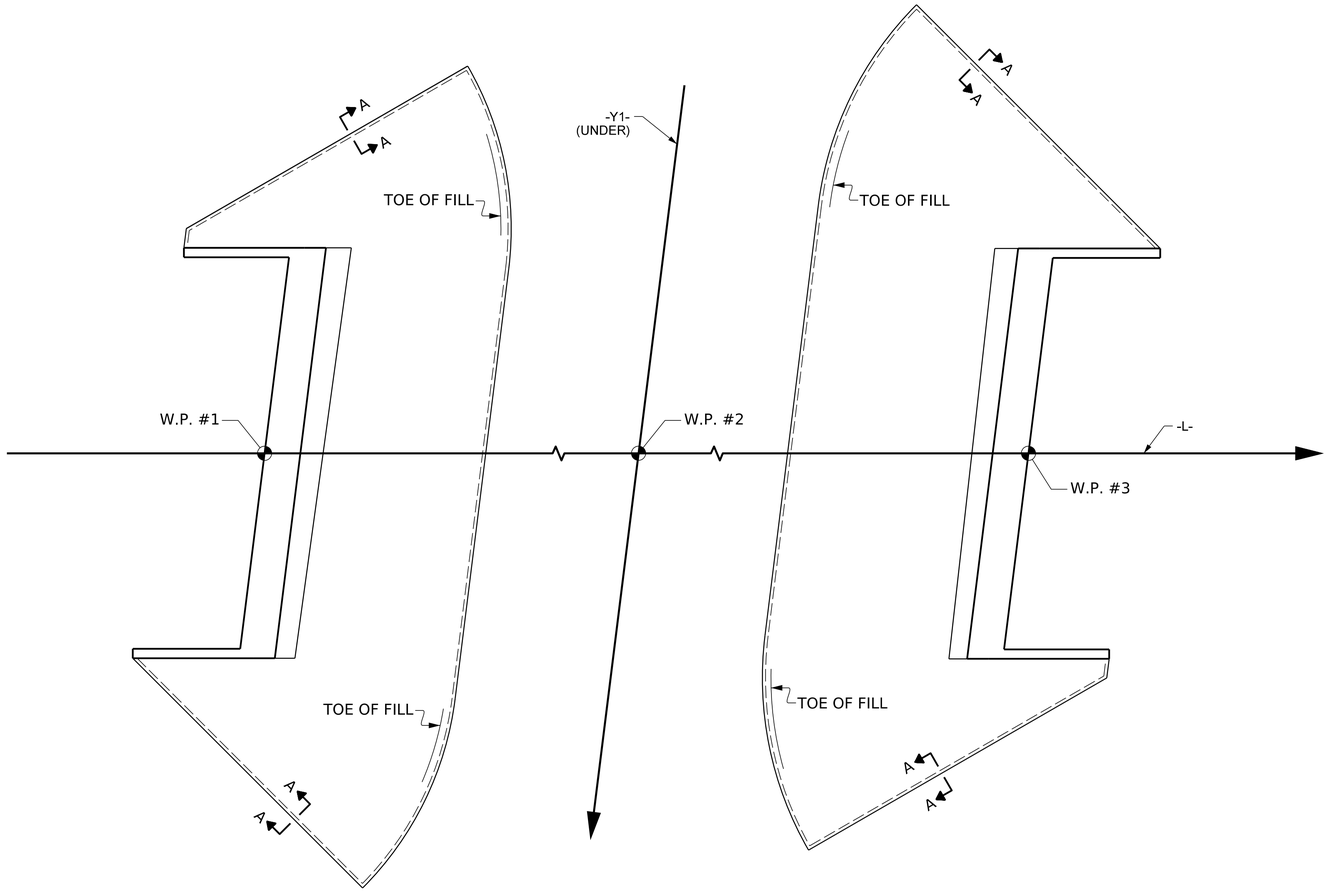

PLAN

GENERAL NOTES

STRAIGHT EDGING WILL NOT BE REQUIRED UNLESS, IN THE OPINION OF THE ENGINEER, VISUAL INSPECTION INDICATES A NEED FOR IT. MEASUREMENT AND PAYMENT SHALL BE AS PRESCRIBED IN SECTION 462 OF THE STANDARD SPECIFICATIONS. FOR BERM WIDTH, SEE GENERAL DRAWING.

SLOPE PROTECTION SHALL CONSIST OF 4'' POURED-IN-PLACE CONCRETE SLOPE PROTECTION AS SHOWN IN THE DETAILS ON THIS SHEET. CONCRETE SHALL BE CLASS "B". THE CONCRETE SURFACE SHALL BE FLOATED WITH A WOODEN FLOAT AND FINISHED. WELDED WIRE FABRIC REINFORCING SHALL BE 6 X 6 - W1.4 X W1.4, 60'' WIDE. SLOPE PROTECTION SHALL BE POURED IN 5' STRIPS AS SHOWN IN THE "POURING DETAIL" WITH 2'-0" LONG #4 BARS PLACED ALONG THE SLOPE BETWEEN STRIPS AT 1'-6" MAXIMUM SPACING. SLOPE PROTECTION MAY BE POURED IN ALTERNATE 4' AND 5' STRIPS AS SHOWN IN THE "OPTIONAL POURING DETAIL" WITH ADJACENT RUNS OF WELDED WIRE FABRIC LAPPING AT LEAST 6''. THE COST OF THE WELDED WIRE FABRIC AND #4 BARS, IF USED, SHALL BE INCLUDED IN THE CONTRACT UNIT PRICE BID PER SQUARE YARD FOR SLOPE PROTECTION.

BRIDGE @ STA. 29+75.30 -L-	4" INCH SLOPE PROTECTION	* WELDED WIRE FABRIC 60 INCHES WIDE
	SQUARE YARDS	APPROX. L.F.
END BENT 1	248	469
END BENT 2	274	543

* QUANTITY SHOWN IS BASED ON 5' POURS.

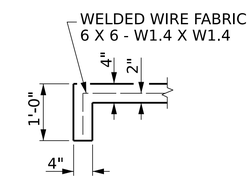

SECTION A-A

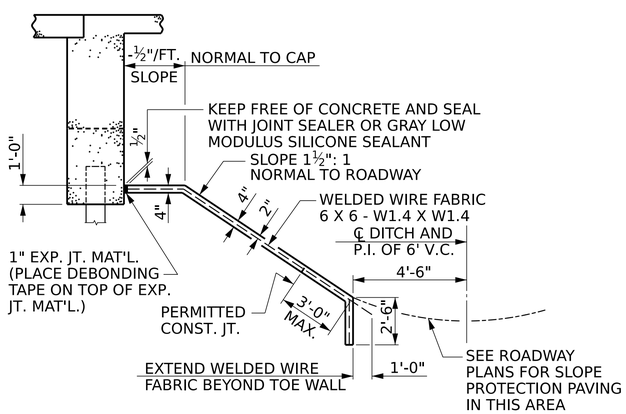

SECTION ALONG ℄ SURVEY WHEN FILL CATCHES IN DITCH

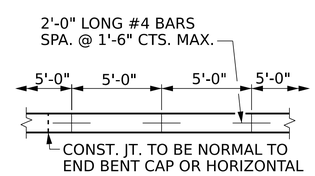

STRIP WIDTHS MAY VARY IN CURVED PORTION.

POURING DETAIL

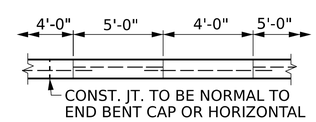

POUR A 4'-0'' STRIP FIRST. STRIP WIDTHS MAY VARY IN CURVED PORTION.

OPTIONAL POURING DETAIL

PROJECT NO. I-6011A

ROBESON COUNTY

STATION: 29+75.30 -L-

SHEET 1 OF 2

STATE OF NORTH CAROLINA
DEPARTMENT OF TRANSPORTATION
RALEIGH

STANDARD

SLOPE PROTECTION DETAILS

DOCUMENT NOT CONSIDERED FINAL UNLESS ALL SIGNATURES COMPLETED

NORTH CAROLINA PROFESSIONAL SEAL 46232 ENGINEER Santiago E. Aguilar

Signed by: Santiago E Aguilar
43B96A78BF64402...
5/14/2026

moffatt & nichol
4700 FALLS OF NEUSE ROAD, SUITE 300
RALEIGH, NORTH CAROLINA 27609
(919) 781-4626 VOICE (919) 781-4869 FAX
NC LICENSE NO.: F-0105

REVISIONS									SHEET NO.
NO.	BY:	DATE:	NO.	BY:	DATE:				S-31
1			3						TOTAL SHEETS
2			4						34

ASSEMBLED BY: T. KIRSCHBAUM		DATE: 01/2026	
CHECKED BY: P. SHAW		DATE: 01/2026	
DRAWN BY: ELR 5/92	REV. 12/21/11	MAA/GM	
CHECKED BY: GRP 6/92	REV. 1/16	MAA/TMG	
	REV. 12/17	MAA/THC	

5/13/2026
P:\RA\11125-02\20 CADD\I-6011A\Structures\01-CADD\I-6011A_Print File.dgn
tkirschbaum

Docusign Envelope ID: B51A3BFD-B61E-8A47-81F7-C89E23847CA8

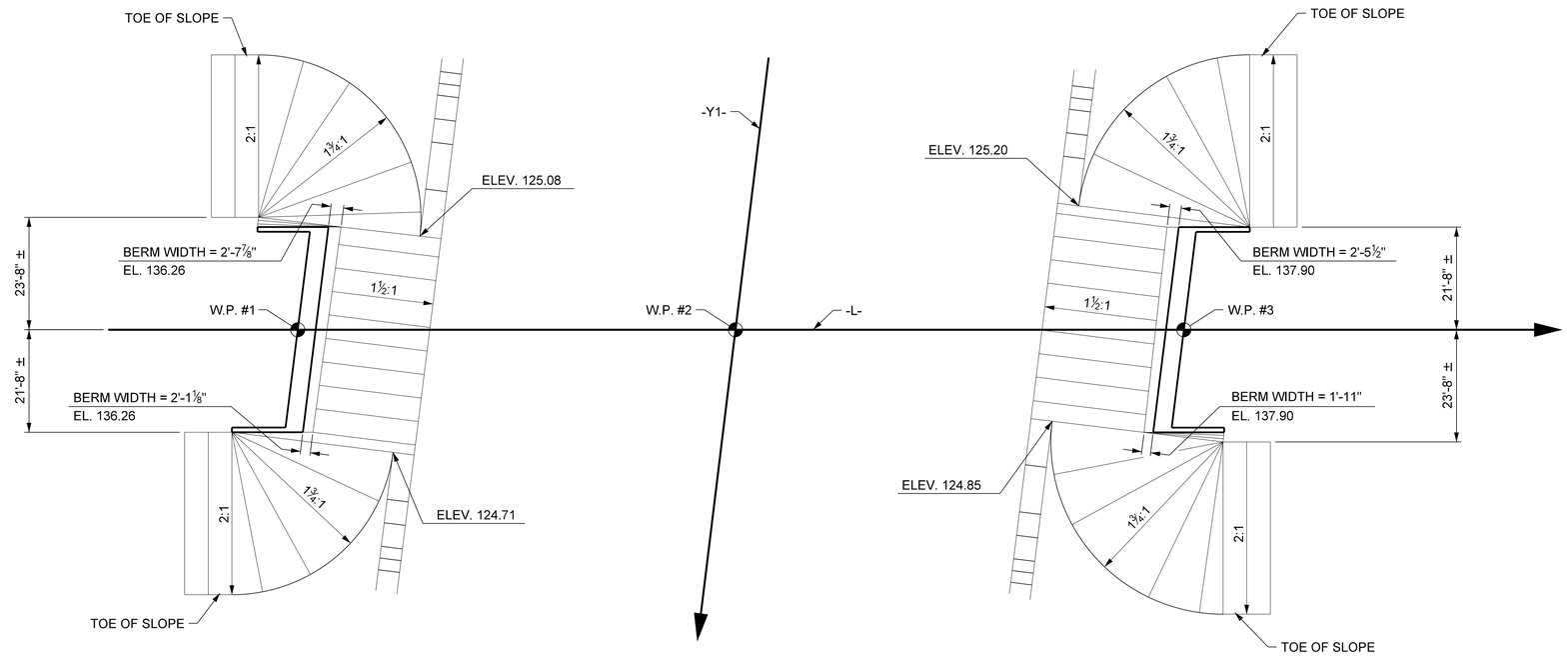

END BENT 1

END BENT 2

PLAN - GRADING

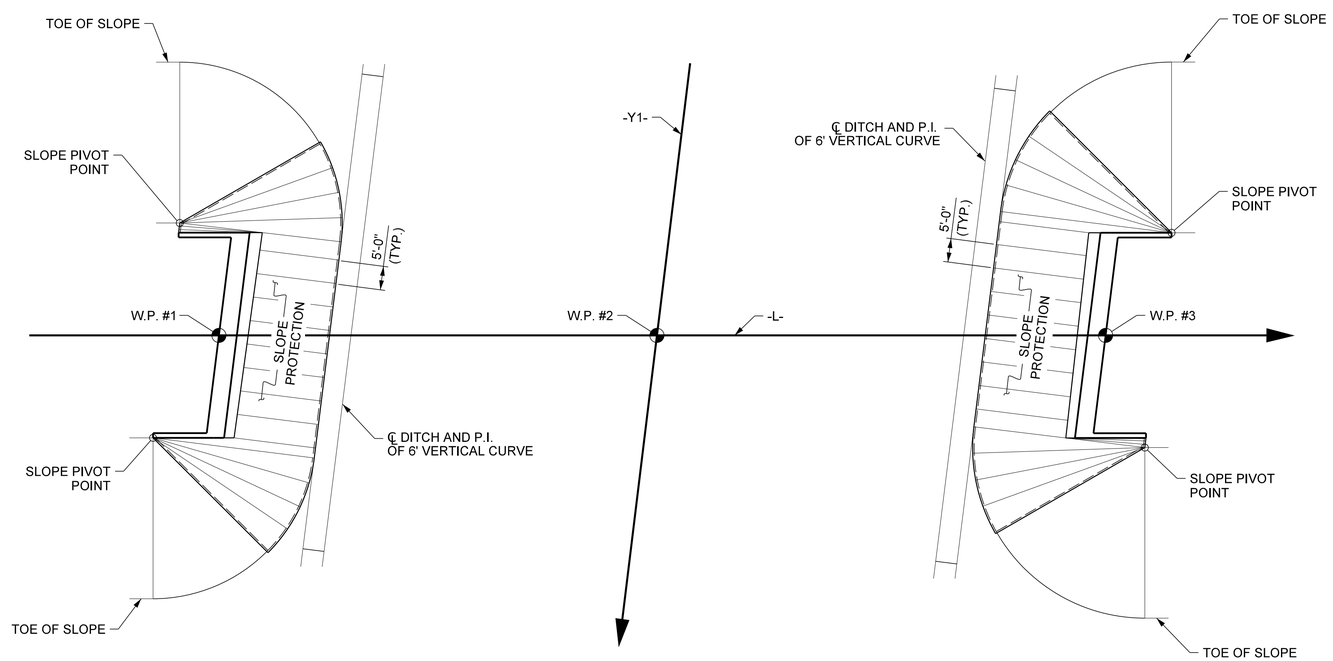

END BENT 1

END BENT 2

PLAN - CONCRETE PLACEMENT

ASSEMBLED BY: T. KIRSCHBAUM	DATE: 01/2026		
CHECKED BY: P. SHAW	DATE: 01/2026		
DRAWN BY: WJH 10/88	REV. 10/1/11	MAA/GM	
CHECKED BY: FCJ 10/88	REV. 1/16	MAA/TMG	
	REV. 12/17	MAA/THC	

moffatt & nichol
4700 FALLS OF NEUSE ROAD, SUITE 300
RALEIGH, NORTH CAROLINA 27609
(919) 781-4626 VOICE (919) 781-4869 FAX
NC LICENSE NO.: F-0105

DOCUMENT NOT CONSIDERED FINAL UNLESS ALL SIGNATURES COMPLETED

NORTH CAROLINA PROFESSIONAL SEAL 46232 ENGINEER Santiago E. Aguilar

Signed by: Santiago E Aguilar
43B96A78EF64402...
5/14/2026

PROJECT NO. I-6011A

ROBESON COUNTY

STATION: 29+75.30 -L-

SHEET 2 OF 2

STATE OF NORTH CAROLINA
DEPARTMENT OF TRANSPORTATION
RALEIGH

STANDARD

SLOPE PROTECTION DETAILS

REVISIONS								SHEET NO.
NO.	BY:	DATE:	NO.	BY:	DATE:			S-32
1			3					TOTAL SHEETS
2			4					34

STD. NO. SP2 (SHT 6)

5/13/2026
P:\RA\11125-0020 CADD\I-6011A\Structures\01-CADD\I-6011A_Print File.dgn
tkirschbaum

Docusign Envelope ID: B51A3BFD-B61E-8A47-81F7-C89E23847CA8

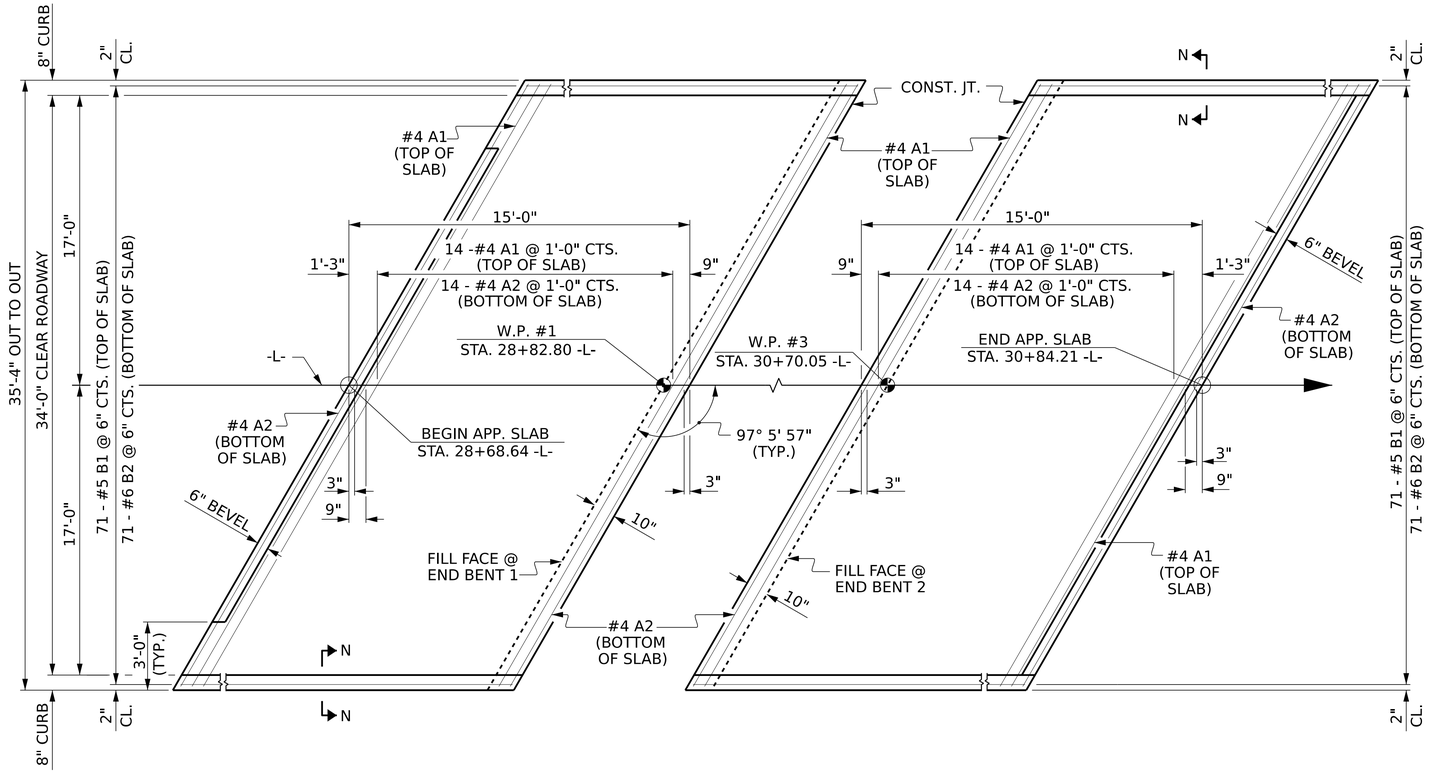

PLAN @ END BENT 1

PLAN @ END BENT 2

DIMENSIONS SHOWN ARE TYPICAL FOR BOTH APPROACH SLABS

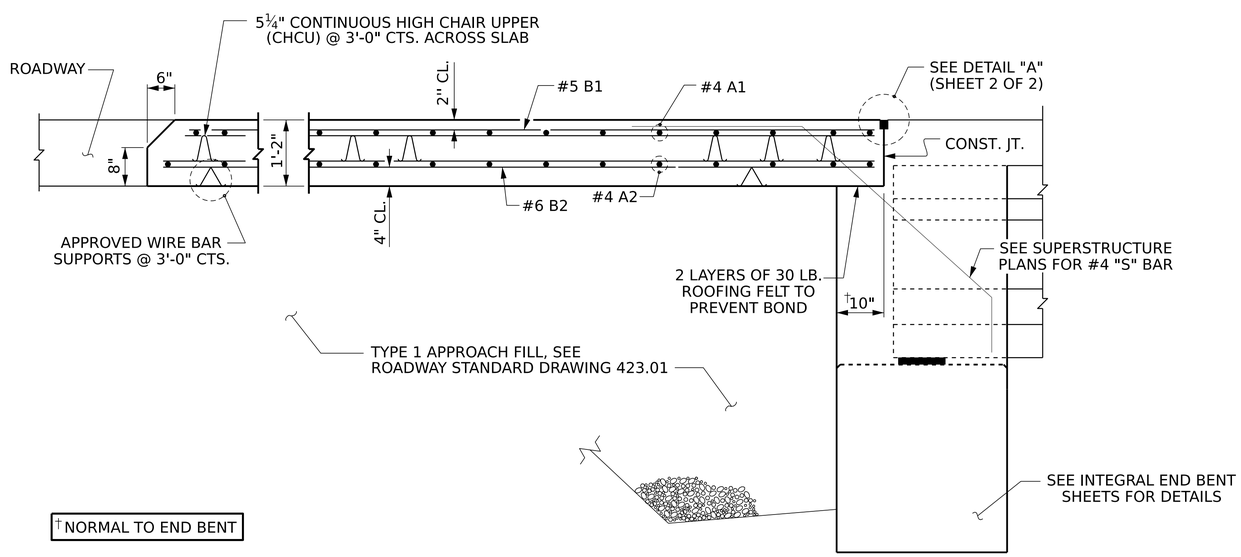

† NORMAL TO END BENT

SECTION THRU SLAB

NOTES

FOR BRIDGE APPROACH FILL, SEE ROADWAY PLANS.

APPROACH SLAB SHALL NOT BE CONSTRUCTED PRIOR TO COMPLETION OF THE BRIDGE DECK.

AREA BETWEEN THE WINGWALL AND APPROACH SLAB SHALL BE GRADED TO DRAIN THE WATER AWAY FROM THE FILL FACE OF THE BRIDGE AND SHALL BE PAVED. SEE ROADWAY PLANS.

THE JOINT OPENING AT THE APPROACH SLAB/DECK INTERFACE SHALL BE SAWED NO MORE THAN 12 HOURS AFTER THE APPROACH SLAB IS CAST. THE JOINT SHALL BE CLEANED OF ALL DEBRIS BEFORE THE SEALANT IS APPLIED. THE JOINT SEALER MATERIAL SHALL CONFORM TO THE REQUIREMENTS OF SECTION 1028-3 OF THE STANDARD SPECIFICATIONS.

AT THE CONTRACTORS OPTION "TYPE 1A - ALTERNATE APPROACH FILL" (ROADWAY STD. 423.02) MAY BE CONSTRUCTED AT NO ADDITIONAL COST TO THE DEPARTMENT IN LIEU OF "TYPE 1 - APPROACH FILL".

BILL OF MATERIAL

FOR ONE APPROACH SLAB (2 REQ'D)

BAR	NO.	SIZE	TYPE	LENGTH	WEIGHT
*A1	16	#4	STR	35'-3"	377
A2	16	#4	STR	35'-3"	377
*B1	71	#5	STR	14'-2"	1049
B2	71	#6	STR	14'-8"	1564
REINFORCING STEEL				LBS.	1,941
* EPOXY COATED REINFORCING STEEL				LBS.	1,426
CLASS AA CONCRETE				C. Y.	23.2

SPLICE LENGTHS

BAR SIZE	EPOXY COATED	UNCOATED
#4	1'-11"	1'-7"
#5	2'-5"	2'-0"
#6	3'-7"	2'-5"

PROJECT NO. I-6011A

ROBESON COUNTY

STATION: 29+75.30 -L-

SHEET 1 OF 2

STATE OF NORTH CAROLINA
DEPARTMENT OF TRANSPORTATION
RALEIGH

STANDARD

BRIDGE APPROACH SLAB FOR INTEGRAL ABUTMENT WITH FLEXIBLE PAVEMENT

DOCUMENT NOT CONSIDERED FINAL UNLESS ALL SIGNATURES COMPLETED

NORTH CAROLINA PROFESSIONAL SEAL 46232 ENGINEER Santiago E. Aguilar

Signed by: Santiago E Aguilar
43B96A78EF64402...
5/14/2026

moffatt & nichol
4700 FALLS OF NEUSE ROAD, SUITE 300
RALEIGH, NORTH CAROLINA 27609
(919) 781-4626 VOICE (919) 781-4869 FAX
NC LICENSE NO.: F-0105

REVISIONS								SHEET NO.
NO.	BY:	DATE:	NO.	BY:	DATE:			S-33
1			3					TOTAL SHEETS
2			4					34

ASSEMBLED BY:	T. KIRSCHBAUM	DATE:	01/2026
CHECKED BY:	P. SHAW	DATE:	01/2026
DRAWN BY:	TLA 10/05	REV. 12/17	MAA/THC
CHECKED BY:	GM 5/06	REV. 06/19	BNB/THC
		REV. 07/23	BNB/SNM

5/13/2026
P:\RA\11125-02\20 CADD\I-6011A\Structures\01-CADD\I-6011A_Print File.dgn
tkirschbaum

STD. NO. BAS5 Sht. 02b

Docusign Envelope ID: B51A3BFD-B61E-8A47-81F7-C89E23847CA8

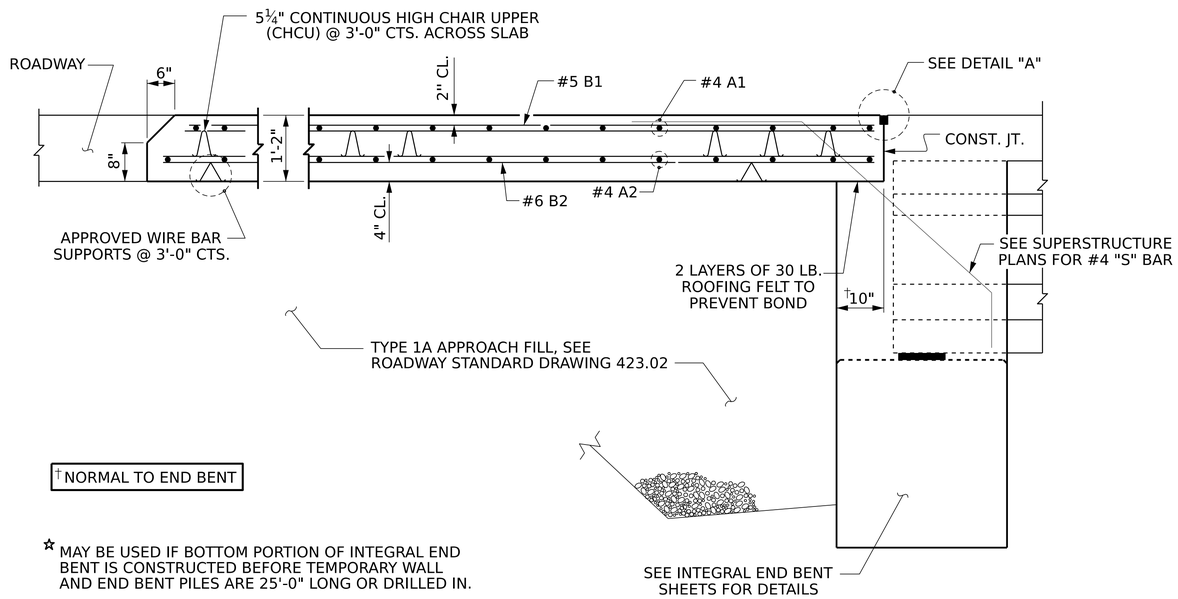

SECTION THRU SLAB

☆(TYPE 1A - ALTERNATE APPROACH FILL)

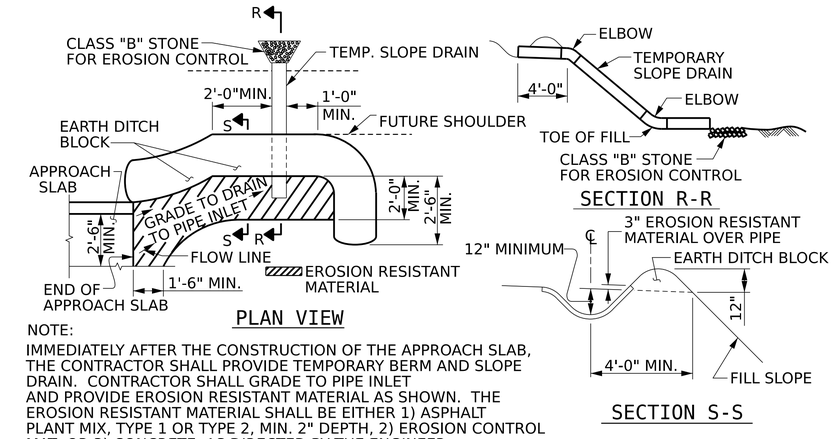

NOTE:
IMMEDIATELY AFTER THE CONSTRUCTION OF THE APPROACH SLAB, THE CONTRACTOR SHALL PROVIDE TEMPORARY BERM AND SLOPE DRAIN. CONTRACTOR SHALL GRADE TO PIPE INLET AND PROVIDE EROSION RESISTANT MATERIAL AS SHOWN. THE EROSION RESISTANT MATERIAL SHALL BE EITHER 1) ASPHALT PLANT MIX, TYPE 1 OR TYPE 2, MIN. 2" DEPTH, 2) EROSION CONTROL MAT, OR 3) CONCRETE, AS DIRECTED BY THE ENGINEER. THE SLOPE DRAIN SHALL CONSIST OF A NON-PERFORATED TEMPORARY DRAINAGE PIPE, 12 INCHES IN DIAMETER.

TEMPORARY BERM AND SLOPE DRAIN DETAILS

(TO BE USED WHEN SHOULDER BERM GUTTER IS REQUIRED)

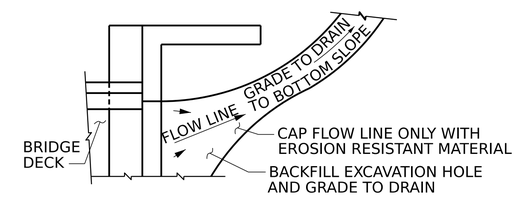

NOTE: IF THE APPROACH SLAB IS NOT CONSTRUCTED IMMEDIATELY AFTER THE BACKFILLING OF THE END BENT EXCAVATION, GRADE TO DRAIN TO THE BOTTOM OF THE SLOPE AND PROVIDE EROSION RESISTANT MATERIAL, SUCH AS FIBERGLASS ROVING OR AS DIRECTED BY THE ENGINEER TO PREVENT SOIL EROSION AND TO PROTECT THE AREA ADJACENT TO THE STRUCTURE. THE CONTRACTOR WILL BE REQUIRED TO REMOVE THESE MATERIALS PRIOR TO CONSTRUCTION OF THE APPROACH SLAB.

TEMPORARY DRAINAGE DETAIL

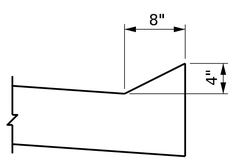

SECTION N-N

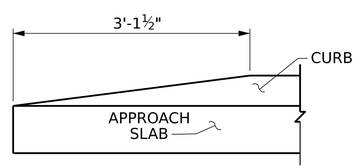

END OF CURB WITHOUT SHOULDER BERM GUTTER

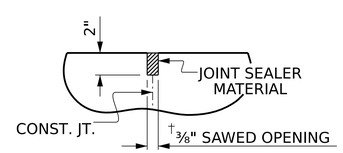

DETAIL "A"

PROJECT NO. I-6011A
ROBESON COUNTY
STATION: 29+75.30 -L-

SHEET 2 OF 2

STATE OF NORTH CAROLINA
DEPARTMENT OF TRANSPORTATION
RALEIGH

STANDARD

BRIDGE APPROACH SLAB DETAILS

REVISIONS						SHEET NO.
NO.	BY:	DATE:	NO.	BY:	DATE:	S-34
1			3			TOTAL SHEETS
2			4			34

DOCUMENT NOT CONSIDERED FINAL UNLESS ALL SIGNATURES COMPLETED

NORTH CAROLINA PROFESSIONAL SEAL 46232 ENGINEER Santiago E. Aguilar
Signed by: Santiago E Aguilar
43B96A78EF64402...
5/14/2026

moffatt & nichol
4700 FALLS OF NEUSE ROAD, SUITE 300
RALEIGH, NORTH CAROLINA 27609
(919) 781-4626 VOICE (919) 781-4869 FAX
NC LICENSE NO.: F-0105

ASSEMBLED BY:	T. KIRSCHBAUM	DATE:	01/2026
CHECKED BY:	P. SHAW	DATE:	01/2026

DRAWN BY:	TLA	10/05	REV. 12/17	MAA/THC
CHECKED BY:	GM	5/06	REV. 06/19	BNB/THC
			REV. 07/23	BNB/SNM

5/13/2026
P:\RA\11125-02\20 CADD\I-6011A\Structures\01-CADD\I-6011A_Print File.dgn
tkirschbaum

STD. NO. BAS5 Sht. 02b

8/26/21

STANDARD NOTES

DESIGN DATA:

SPECIFICATIONS	AASHTO (CURRENT)
LIVE LOAD	SEE PLANS
IMPACT ALLOWANCE	SEE AASHTO
STRESS IN EXTREME FIBER OF STRUCTURAL STEEL - AASHTO M270 GRADE 36	20,000 LBS. PER SQ. IN.
- AASHTO M270 GRADE 50W	27,000 LBS. PER SQ. IN.
- AASHTO M270 GRADE 50	27,000 LBS. PER SQ. IN.
REINFORCING STEEL IN TENSION - GRADE 60	24,000 LBS. PER SQ. IN.
CONCRETE IN COMPRESSION	1,200 LBS. PER SQ. IN.
CONCRETE IN SHEAR	SEE AASHTO
STRUCTURAL TIMBER - TREATED OR UNTREATED EXTREME FIBER STRESS	1,800 LBS. PER SQ. IN.
COMPRESSION PERPENDICULAR TO GRAIN OF TIMBER	375 LBS. PER SQ. IN.
EQUIVALENT FLUID PRESSURE OF EARTH	30 LBS. PER CU. FT. (MINIMUM)

MATERIAL AND WORKMANSHIP:

EXCEPT AS MAY OTHERWISE BE SPECIFIED ON PLANS OR IN THE SPECIAL PROVISIONS, ALL MATERIAL AND WORKMANSHIP SHALL BE IN ACCORDANCE WITH THE 2024 "STANDARD SPECIFICATIONS FOR ROADS AND STRUCTURES" OF THE N. C. DEPARTMENT OF TRANSPORTATION.

STEEL SHEET PILING FOR PERMANENT OR TEMPORARY APPLICATIONS SHALL BE HOT ROLLED.

CONCRETE:

UNLESS OTHERWISE REQUIRED ON PLANS, CLASS A CONCRETE SHALL BE USED FOR ALL PORTIONS OF ALL STRUCTURES WITH THE EXCEPTION THAT: CLASS AA CONCRETE SHALL BE USED IN BRIDGE SUPERSTRUCTURES, ABUTMENT BACKWALLS, AND APPROACH SLABS; AND CLASS B CONCRETE SHALL BE USED FOR SLOPE PROTECTION AND RIP RAP.

CONCRETE CHAMFERS:

UNLESS OTHERWISE NOTED ON THE PLANS, ALL EXPOSED CORNERS ON STRUCTURES SHALL BE CHAMFERED ¾" WITH THE FOLLOWING EXCEPTIONS: TOP CORNERS OF CURBS MAY BE ROUNDED TO 1½" RADIUS WHICH IS BUILT INTO CURB FORMS; CORNERS OF TRANSVERSE FLOOR EXPANSION JOINTS SHALL BE ROUNDED WITH A ¼" FINISHING TOOL UNLESS OTHERWISE REQUIRED ON PLANS; AND CORNERS OF EXPANSION JOINTS IN THE ROADWAY FACES AND TOPS OF CURBS AND SIDEWALKS SHALL BE ROUNDED TO A ¼" RADIUS WITH A FINISHING STONE OR TOOL UNLESS OTHERWISE REQUIRED ON PLANS.

DOWELS:

DOWELS WHEN INDICATED ON PLANS AS FOR CULVERT EXTENSIONS, SHALL BE EMBEDDED AT LEAST 12" INTO THE OLD CONCRETE AND GROUTED INTO PLACE WITH 1:2 CEMENT MORTAR.

ALLOWANCE FOR DEAD LOAD DEFLECTION, SETTLEMENT, ETC. IN CASTING SUPERSTRUCTURES:

BRIDGES SHALL BE BUILT ON THE GRADE OR VERTICAL CURVE SHOWN ON PLANS. SLABS, CURBS AND PARAPETS SHALL CONFORM TO THE GRADE OR CURVE.

ALL DIMENSIONS WHICH ARE GIVEN IN SECTION AND ARE AFFECTED BY DEAD LOAD DEFLECTIONS ARE DIMENSIONS AT CENTER LINE OF BEARING UNLESS OTHERWISE NOTED ON PLANS. IN SETTING FORMS FOR STEEL BEAM BRIDGES AND PRESTRESSED CONCRETE GIRDER BRIDGES, ADJUSTMENTS SHALL BE MADE DUE TO THE DEAD LOAD DEFLECTIONS FOR THE ELEVATIONS SHOWN. WHERE BLOCKS ARE SHOWN OVER BEAMS FOR BUILDING UP TO THE SLAB, THE VERTICAL DIMENSIONS OF THE BLOCKS SHALL BE ADJUSTED BETWEEN BEARINGS TO COMPENSATE FOR DEAD LOAD DEFLECTIONS, VERTICAL CURVE ORDINATE, AND ACTUAL BEAM CAMBER. WHERE BOTTOM OF SLAB IS IN LINE WITH BOTTOM OF TOP FLANGES, DEPTH OF SLAB BETWEEN BEARINGS SHALL BE ADJUSTED TO COMPENSATE FOR DEAD LOAD DEFLECTION, VERTICAL CURVE ORDINATE, AND ACTUAL BEAM CAMBER.

IN SETTING FALSEWORK AND FORMS FOR REINFORCED CONCRETE SPANS, AN ALLOWANCE SHALL BE MADE FOR DEAD LOAD DEFLECTIONS, SETTLEMENT OF FALSEWORK, AND PERMANENT CAMBER WHICH SHALL BE PROVIDED FOR IN ADDITION TO THE ELEVATIONS SHOWN. AFTER REMOVAL OF THE FALSEWORK, THE FINISHED STRUCTURES SHALL CONFORM TO THE PROFILE AND ELEVATIONS SHOWN ON THE PLANS AND CONSTRUCTION ELEVATIONS FURNISHED BY THE ENGINEER.

DETAILED DRAWINGS FOR FALSEWORK OR FORMS FOR BRIDGE SUPERSTRUCTURE AND ANY STRUCTURE OR PARTS OF A STRUCTURE AS NOTED ON THE PLANS SHALL BE SUBMITTED TO THE ENGINEER FOR APPROVAL BEFORE CONSTRUCTION OF THE FALSEWORK OR FORMS IS STARTED.

REINFORCING STEEL:

ALL REINFORCING STEEL SHALL BE DEFORMED. DIMENSIONS RELATIVE TO PLACEMENT OF REINFORCING ARE TO CENTERS OF BARS UNLESS OTHERWISE INDICATED IN THE PLANS. DIMENSIONS ON BAR DETAILS ARE TO CENTERS OF BARS OR ARE OUT TO OUT AS INDICATED ON PLANS.

WIRE BAR SUPPORTS SHALL BE PROVIDED FOR REINFORCING STEEL WHERE INDICATED ON THE PLANS. WHEN BAR SUPPORT PIECES ARE PLACED IN CONTINUOUS LINES, THEY SHALL BE SO PLACED THAT THE ENDS OF THE SUPPORTING WIRES SHALL BE LAPPED TO LOCK LEGS ON ADJOINING PIECES.

STRUCTURAL STEEL:

AT THE CONTRACTOR'S OPTION, HE MAY SUBSTITUTE ⅞" ∅ SHEAR STUDS FOR THE ¾" ∅ STUDS SPECIFIED ON THE PLANS. THIS SUBSTITUTION SHALL BE MADE AT THE RATE OF 3 - ⅞" ∅ STUDS FOR 4 - ¾" ∅ STUDS, AND STUD SPACING CHANGES SHALL BE MADE AS NECESSARY TO PROVIDE THE SAME EQUIVALENT NUMBER OF ⅞" ∅ STUDS ALONG THE BEAM AS SHOWN FOR ¾" ∅ STUDS BASED ON THE RATIO OF 3 - ⅞"∅ STUDS FOR 4 - ¾" ∅ STUDS. STUDS OF THE LENGTH SPECIFIED ON THE PLANS MUST BE PROVIDED. THE MAXIMUM SPACING SHALL BE 2'-0".

EXCEPT AT THE INTERIOR SUPPORTS OF CONTINUOUS BEAMS WHERE THE COVER PLATE IS IN CONTACT WITH BEARING PLATE, THE CONTRACTOR MAY, AT HIS OPTION, SUBSTITUTE FOR THE COVER PLATES DESIGNATED ON THE PLANS COVER PLATES OF THE EQUIVALENT AREA PROVIDED THESE PLATES ARE AT LEAST 5/16" IN THICKNESS AND DO NOT EXCEED A WIDTH EQUAL TO THE FLANGE WIDTH LESS 2" OR A THICKNESS EQUAL TO 2 TIMES THE FLANGE THICKNESS. THE SIZE OF FILLET WELDS SHALL CONFORM TO THE REQUIREMENTS OF THE CURRENT ANSI/AASHTO/AWS "BRIDGE WELDING CODE". ELECTROSLAG WELDING WILL NOT BE PERMITTED.

WITH THE SOLE EXCEPTION OF EDGES AT SURFACES WHICH BEAR ON OTHER SURFACES, ALL SHARP EDGES AND ENDS OF SHAPES AND PLATES SHALL BE SLIGHTLY ROUNDED BY SUITABLE MEANS TO A RADIUS OF APPROXIMATELY 1/16" OR EQUIVALENT FLAT SURFACE AT A SUITABLE ANGLE PRIOR TO PAINTING, GALVANIZING, OR METALLIZING.

HANDRAILS AND POSTS:

METAL STANDARDS AND FACES OF THE CONCRETE END POSTS FOR THE METAL RAIL SHALL BE SET NORMAL TO THE GRADE OF THE CURB, UNLESS OTHERWISE SHOWN ON PLANS. THE METAL RAIL AND TOPS OF CONCRETE POSTS USED WITH THE ALUMINUM RAIL SHALL BE BUILT PARALLEL TO THE GRADE OF THE CURB.

METAL HANDRAILS SHALL BE IN ACCORDANCE WITH THE PLANS. RAILS SHALL BE AS MANUFACTURED FOR BRIDGE RAILING. CASTINGS SHALL BE OF A UNIFORM APPEARANCE. FINS AND OTHER DEFORMATIONS RESULTING FROM CASTING OR OTHERWISE SHALL BE REMOVED IN A MANNER SO THAT A UNIFORM COLORING OF THE COMPLETED CASTING SHALL BE OBTAINED. CASTINGS WITH DISCOLORATIONS OR OF NON-UNIFORM COLORING WILL NOT BE ACCEPTED. CERTIFIED MILL REPORTS ARE REQUIRED FOR METAL RAILS AND POSTS.

SPECIAL NOTES:

GENERALLY, IN CASE OF DISCREPANCY, THIS STANDARD SHEET OF NOTES SHALL GOVERN OVER THE SPECIFICATIONS, BUT THE REMAINDER OF THE PLANS SHALL GOVERN OVER NOTES HEREON, AND SPECIAL PROVISIONS SHALL GOVERN OVER ALL. SEE SPECIFICATIONS ARTICLE 105-4.

ENGLISH

JANUARY, 1990

STD. NO. SN