Docusign Envelope ID: 4C5B106F-A7DB-426B-891B-DBFC9FE48D1D

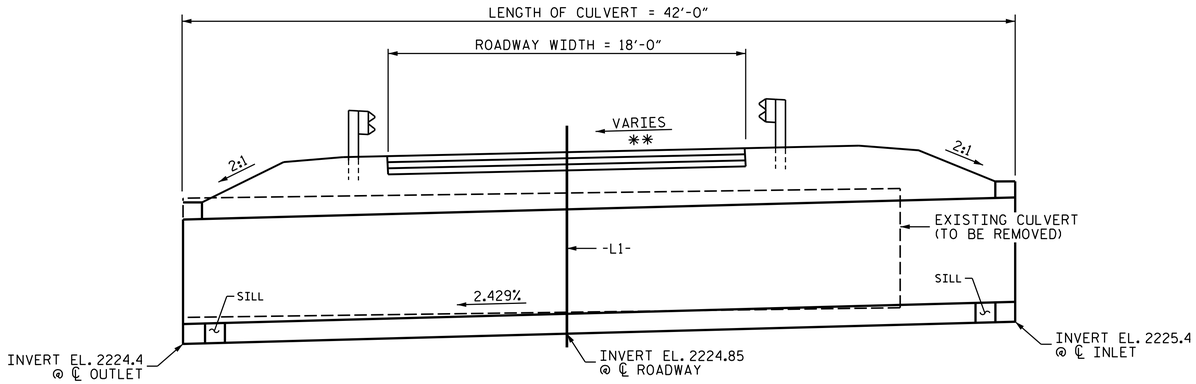

CULVERT SECTION ALONG ℄

**SEE ROADWAY PLANS FOR SLOPES

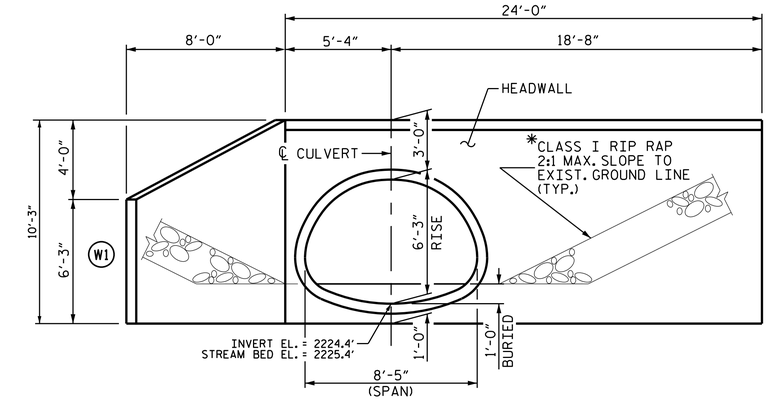

OUTLET HEADWALL ELEVATION

(SEE SECTION A-A FOR SILL DETAILS)

* ROADWAY PAY ITEM, SEE ROADWAY PLANS FOR DETAILS AND QUANTITIES.

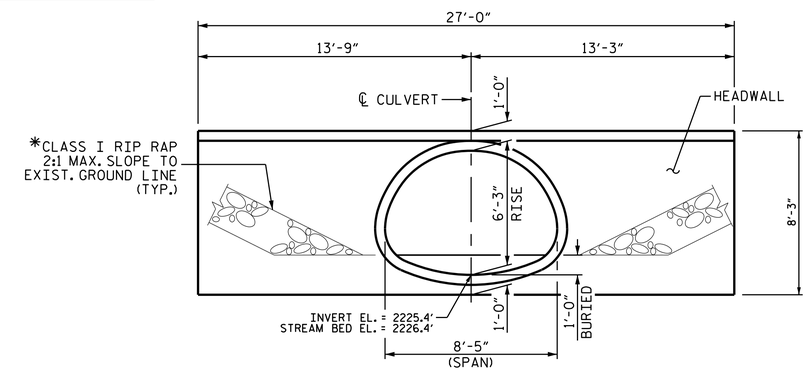

INLET HEADWALL ELEVATION

(SEE SECTION A-A FOR SILL DETAILS)

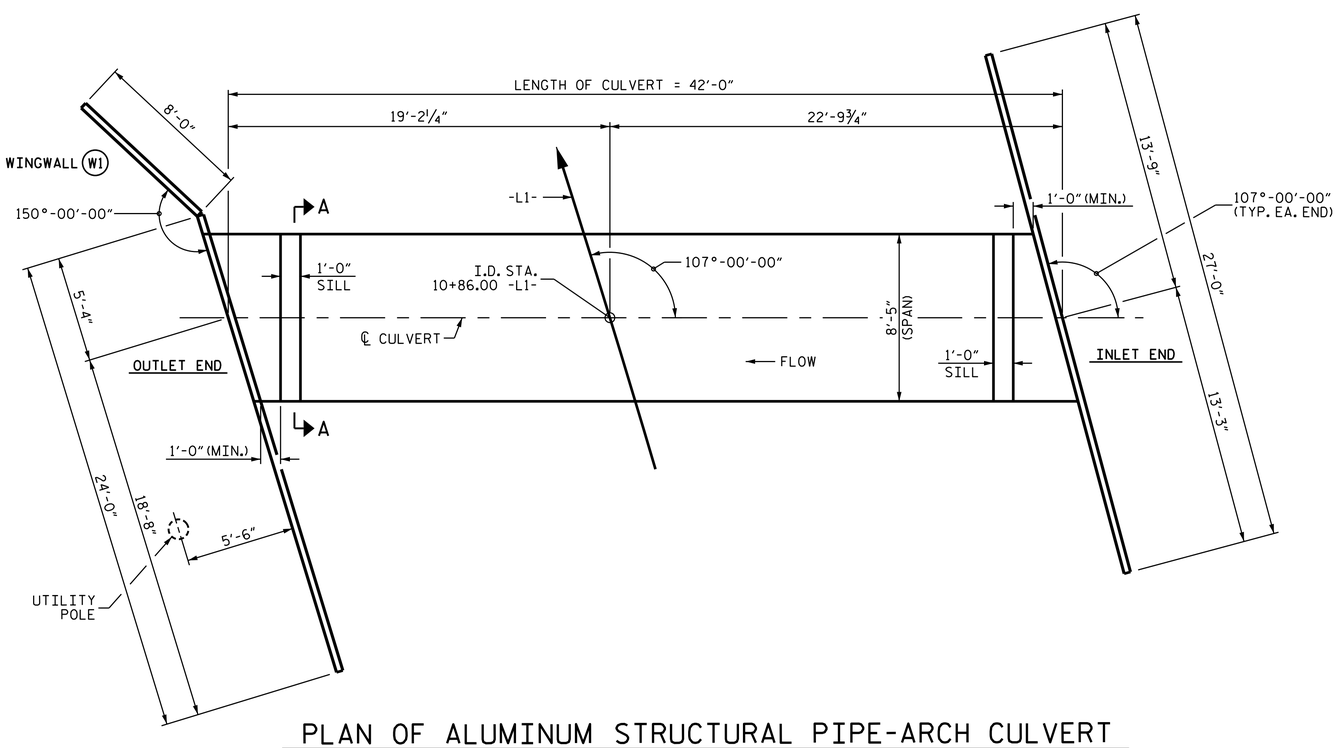

PLAN OF ALUMINUM STRUCTURAL PIPE-ARCH CULVERT

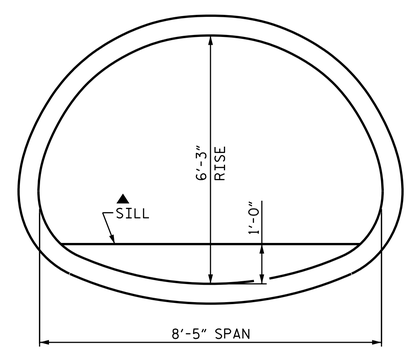

SECTION A-A

(TYPICAL EACH SILL)

▲ CULVERT TO BE FILLED WITH NATIVE STREAM BED MATERIAL TO TOP OF SILLS.

PROJECT NO. DF 18314.2045181

HENDERSON COUNTY

STATION. 10+86.00 -L1-

SHEET 2 OF 2

NORTH CAROLINA PROFESSIONAL SEAL 045410 ENGINEER RAFAEL ASENCIO
12/04/2026

DOCUMENT NOT CONSIDERED FINAL UNLESS ALL SIGNATURES COMPLETED

STATE OF NORTH CAROLINA
DEPARTMENT OF TRANSPORTATION
RALEIGH

SITE 925
SINGLE 8'-5" X 6'-3"
ALUMINUM STRUCTURAL
PIPE-ARCH CULVERT
107° SKEW

Johnson, Mirmiran, & Thompson Inc.
108 ASHEVILLE COMMERCE PARKWAY
CANDLER, NC, 28715
License No: C-3097

ENG. OF RECORD: RA	DATE: 12/2025	
DWN. BY: WDC	DATE: 12/2025	
CHKD. BY: RA	DATE: 12/2025	

REVISIONS						SHEET NO.
NO.	BY:	DATE:	NO.	BY:	DATE:	C-2
1			3			TOTAL SHEETS
2			4			2

wdcrutcher
DGN: pw://jmt-pw.bentley.com:jmt-pw-01/Documents/Projects/2024/24-00277/24-00277-019/Design/Structures/2 Plans/410 005 DF18314.2045181 SMU C2.dgn
TIME: 2/4/2026