PROJECT REFERENCE NO.	SHEET NO.
U-5302	Sig.17.2

OVERLAP PROGRAMMING DETAIL

1. From Main Menu select 4 - UNIT DATA
2. From UNIT DATA Submenu select 3 - OVERLAP DATA

Use Up/Dn/Left/Right keys to position cursor on the desired Overlap. Use the NEXT key to select the overlap type. Press the ENT key and then program as per the Overlap screen(s) shown.

```
OVERLAP DATA

   A: ---   E: ---   I: ---   M: ---
   B: STD   F: ---   J: ---   N: ---
   C: ---   G: ---   K: ---   O: ---
   D: ---   H: ---   L: ---   P: ---

 PREV/NEXT TO CYCLE
```

↓

OVERLAP B

Use Up/Dn/Left/Right keys to position cursor on Overlap 'B', use the NEXT key to select 'STD', then press ENT

```
OVERLAP - B        12345678 90123456
         PARENTS: 00100000 00000000
     +GRN PHASES: 00000000 00000000
     -G/Y PHASES: 00000000 00000000
     -PED PHASES: 00000000 00000000
 TRAIL GREEN STANDARD:   0  YEL/10:  40
 TRAIL GREEN  PREEMPT:   0  RED/10:  20
```

END OVERLAP PROGRAMMING

THIS ELECTRICAL DETAIL IS FOR
THE SIGNAL DESIGN: 05-1813
DESIGNED: February 2025
SEALED: 03/27/2025
REVISED: N/A

Electrical Detail - Sheet 2 of 2

ELECTRICAL AND PROGRAMMING DETAILS FOR:

Prepared for the Offices of:

750 N.Greenfield Pkwy,Garner,NC 27529

US 401 SB (Fayetteville Road)
at
U-Turn North of Purser Drive

Division 5 Wake County Raleigh

PLAN DATE:	March 2025	REVIEWED BY:	
PREPARED BY:	S.Kirkpatrick	REVIEWED BY:	

REVISIONS	INIT.	DATE

DOCUMENT NOT CONSIDERED FINAL UNLESS ALL SIGNATURES COMPLETED

SEAL

NORTH CAROLINA PROFESSIONAL SEAL 036833 ENGINEER RYAN W. HOUGH

Signed by: Ryan W. Hough 03/28/2025

SIGNATURE DATE

SIG. INVENTORY NO. 05-1813

28-MAR-2025 09:56
pw://ncdot-pw.bentley.com:ncdot-pw-01/Documents/NCDOT TSMO/Signal Design Section/Division_05/05-1813/Signals Management/051813_sm_ele_20250328.dgn
sgkirkpatrick

METAL POLE No. 9

PROJECT REFERENCE NO.	SHEET NO.
U-5302	Sig 17.3

Design Loading for METAL POLE NO. 9

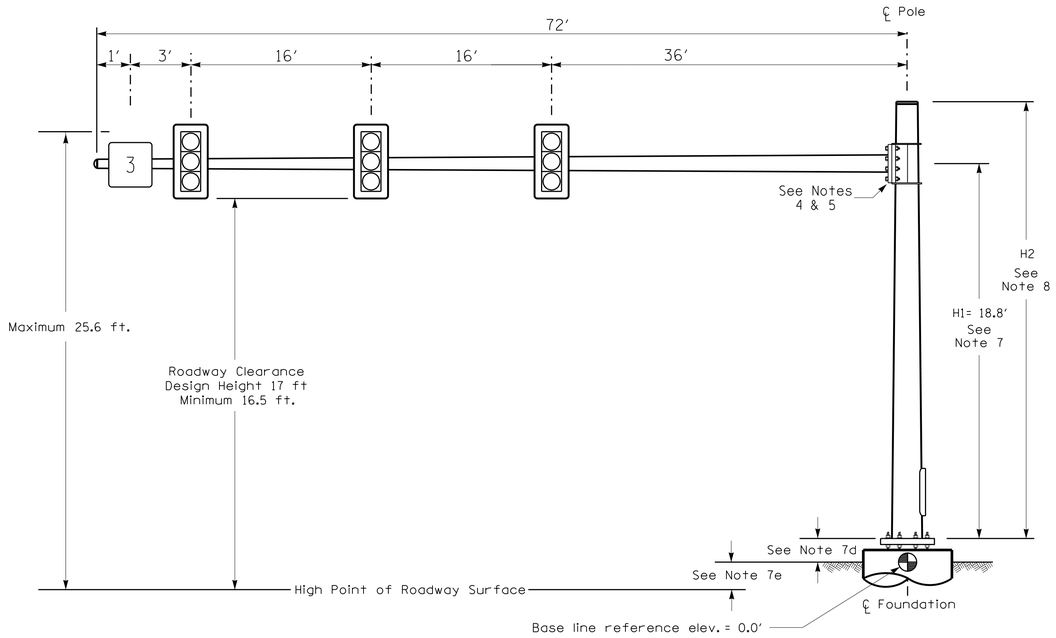

Elevation View

SPECIAL NOTE

The contractor is responsible for verifying that the mast arm attachment height (H1) will provide the "Design Height" clearance from the roadway before submitting final shop drawings for approval. Verify elevation data below which was obtained by field measurement or from available project survey data.

Elevation Data for Mast Arm Attachment (H1)

Elevation Differences for:	Pole 9	
Baseline reference point at ℄ Foundation @ ground level	0.0 ft.	
Elevation difference at High point of roadway surface	0.3 ft.	
Elevation difference at Edge of travelway or face of curb	-1.0 ft.	

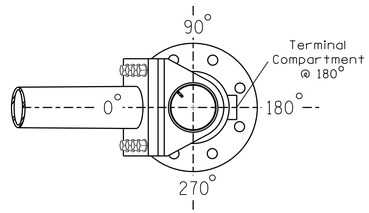

POLE RADIAL ORIENTATION

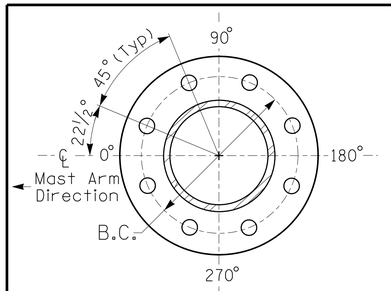

8 BOLT BASE PLATE DETAIL

See Note 6

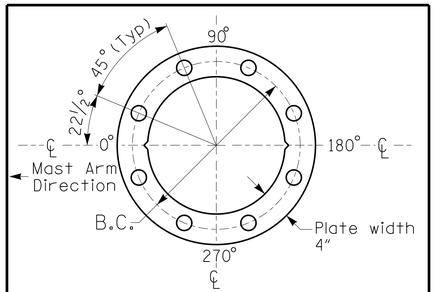

BASE PLATE TEMPLATE & ANCHOR BOLT LOCK PLATE DETAIL
For 8 Bolt Base Plate

MAST ARM LOADING SCHEDULE

LOADING SYMBOL	DESCRIPTION	AREA	SIZE	WEIGHT
	RIGID MOUNTED SIGNAL HEAD 12"-3 SECTION-WITH BACKPLATE	9.3 S.F.	25.5" W X 52.5" L	60 LBS
3	SIGN RIGID MOUNTED	9.0 S.F.	36.0" W X 36.0" L	17 LBS

NOTES

DESIGN REFERENCE MATERIAL

1. Design the traffic signal structure and foundation in accordance with:
   - The 1st Edition 2015 AASHTO LRFD "Standard Specifications for Structural Supports for Highway Signs, Luminaires, and Traffic Signals, including all of the latest interim revisions.
   - The 2024 NCDOT "Standard Specifications for Roads and Structures." The latest addenda to the specifications can be found in the traffic signal project special provisions.
   - The 2024 NCDOT Roadway Standard Drawings.
   - The traffic signal project plans and special provisions.
   - The NCDOT "Metal Pole Standards" located at the following NCDOT website: https://connect.ncdot.gov/resources/safety/Pages/ITS-Design-Resources.aspx

DESIGN REQUIREMENTS

2. Design the traffic signal structure using the loading conditions shown in the elevation views. These are anticipated worst case "design loads" and may not represent the actual loads that will be applied at the time of the installation. The contractor should refer to the traffic signal plans for the actual loads that will be applied at the time of the installation.
3. Design all signal supports using force ratios that do not exceed 0.9.
4. The camber design for the mast arm deflection should provide an appearance of a low pitched arch where the tip or the free end of the mast arm does not deflect below horizontal when fully loaded.
5. A clamp-type bolted mast arm-to-pole connection may be used instead of the welded ring stiffened box connection shown as long as the connection meets all of the design requirements.
6. Design base plate with 8 anchor bolt holes. Provide 2 inch x 60 inch anchor bolts.
7. The mast arm attachment height (H1) shown is based on the following design assumptions:
   a. Mast arm slope and deflection are not considered in determining the arm attachment height as they are assumed to offset each other.
   b. Signal heads are rigidly mounted and vertically centered on the mast arm.
   c. The roadway clearance height for design is as shown in the elevation views.
   d. The top of the pole base plate is 0.75 feet above the ground elevation.
   e. Refer to the Elevation Data Chart for the elevation differences between the proposed foundation ground level and the high point of the roadway.
8. The pole manufacturer will determine the total height (H2) of each pole using the greater of the following:
   - Mast arm attachment height (H1) plus 2 feet, or
   - H1 plus 1/2 of the total height of the mast arm attachment assembly plus 1 foot.
9. If pole location adjustments are required, the contractor must gain approval from the Engineer as this may affect the mast arm lengths and arm attachment heights. The contractor may contact the Signal Design Section Senior Structural Engineer for assistance at (919) 814-5000.
10. The contractor is responsible for verifying that the mast arm length shown will allow proper positioning of the signal heads over the roadway.
11. The contractor is responsible for providing soil penetration testing data (SPT) to the pole manufacturer so site specific foundations can be designed.

NCDOT Wind Zone 4 (120 mph)

DOCUMENT NOT CONSIDERED FINAL UNLESS ALL SIGNATURES COMPLETED

Prepared in the Offices of:
Transportation Mobility and Safety Division
Signal Design Section
750 N.Greenfield Pkwy.Garner,NC 27529

US 401 SB (Fayetteville Road)
at
U-Turn North of Purser Drive

Division 5 | Wake County | Raleigh

PLAN DATE: February 2025 | REVIEWED BY:
PREPARED BY: J.A. Lohr | REVIEWED BY:

SCALE: 0 N/A N/A

REVISIONS	INIT.	DATE

SEAL
NORTH CAROLINA PROFESSIONAL SEAL 026486 ENGINEER ROBERT J. ZIEMBA

DocuSigned by: Robert J. Ziemba 04/01/2025 DATE

SIG. INVENTORY NO. 05-1813

01-APR-2025 07:23
S:\TSG\IMT\TS\Signals\Signal Design Section\Central Region\Div 5\WU-5302\2025 Updates\05181 3_sig_mp_2025nmods.dgn
JALOHr

PROJECT REFERENCE NO.	SHEET NO.
U-5302	Sig. 18.0

DEFAULT PHASING DIAGRAM

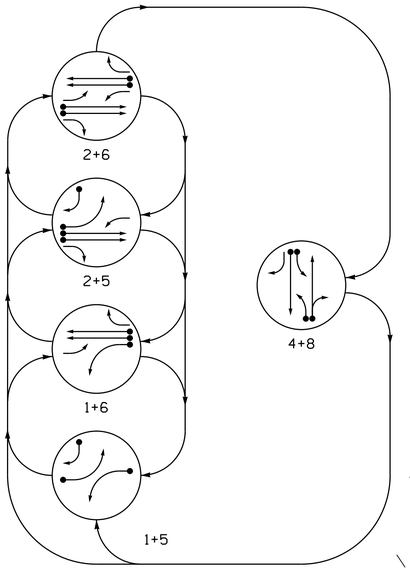

DEFAULT PHASING TABLE OF OPERATION

SIGNAL FACE	PHASE 1+5	1+6	2+5	2+6	4+8	FLASH
11	↚	↚	F Y	F Y	R̸	R̸
21, 22	R	R	G	G	R	R
41	R̸	R̸	R̸	R̸	F Y	R̸
42	R	R	R	R	G	R
43	R/→	R	R/→	R	G	R
51	↚	F Y	↚	F Y	R̸	R̸
61, 62	R	G	R	G	R	R
81	R̸	R̸	R̸	R̸	F Y	R̸
82, 83	R	R	R	R	G	R

SIGNAL FACE I.D.

All Heads L.E.D.

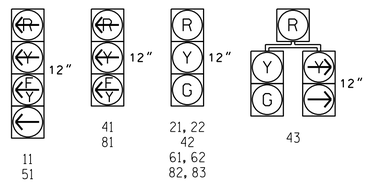

PHASING DIAGRAM DETECTION LEGEND

- DETECTED MOVEMENT
- UNDETECTED MOVEMENT (OVERLAP)
- UNSIGNALIZED MOVEMENT
- PEDESTRIAN MOVEMENT

ALTERNATE PHASING DIAGRAM

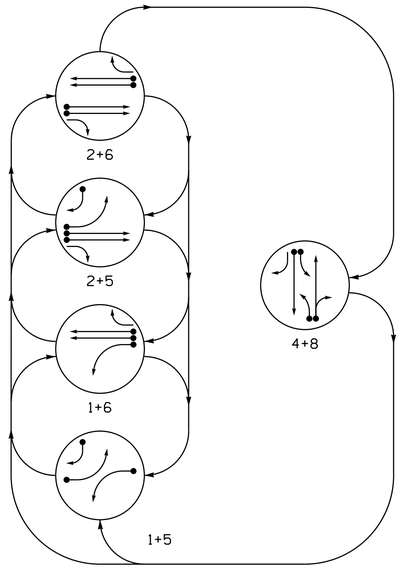

ALTERNATE PHASING TABLE OF OPERATION

SIGNAL FACE	PHASE 1+5	1+6	2+5	2+6	4+8	FLASH
11	↚	↚	R̸	R̸	R̸	R̸
21, 22	R	R	G	G	R	R
41	R̸	R̸	R̸	R̸	F Y	R̸
42	R	R	R	R	G	R
43	R/→	R	R/→	R	G	R
51	↚	R̸	↚	R̸	R̸	R̸
61, 62	R	G	R	G	R	R
81	R̸	R̸	R̸	R̸	F Y	R̸
82, 83	R	R	R	R	G	R

5 Phase
Fully Actuated
(Raleigh Signal System)

NOTES

1. Refer to "Roadway Standard Drawings NCDOT" dated January 2024 and "Standard Specifications for Roads and Structures" dated January 2024.
2. Do not program signal for late night flashing operation unless otherwise directed by the Engineer.
3. Phase 1 and/or 5 may be lagged.
4. Set all detector units to presence mode.
5. Locate new cabinet so as not to obstruct sight distance of vehicles turning right on red.
6. The City Traffic Engineer will determine the hours of use for each phasing plan.
7. This intersection uses non-intrusive detection. Install detectors according to the manufacturer's instructions to achieve the desired detection.
8. Maximum times shown in timing chart are for free-run operation only. Coordinated signal system timing values supersede these values.

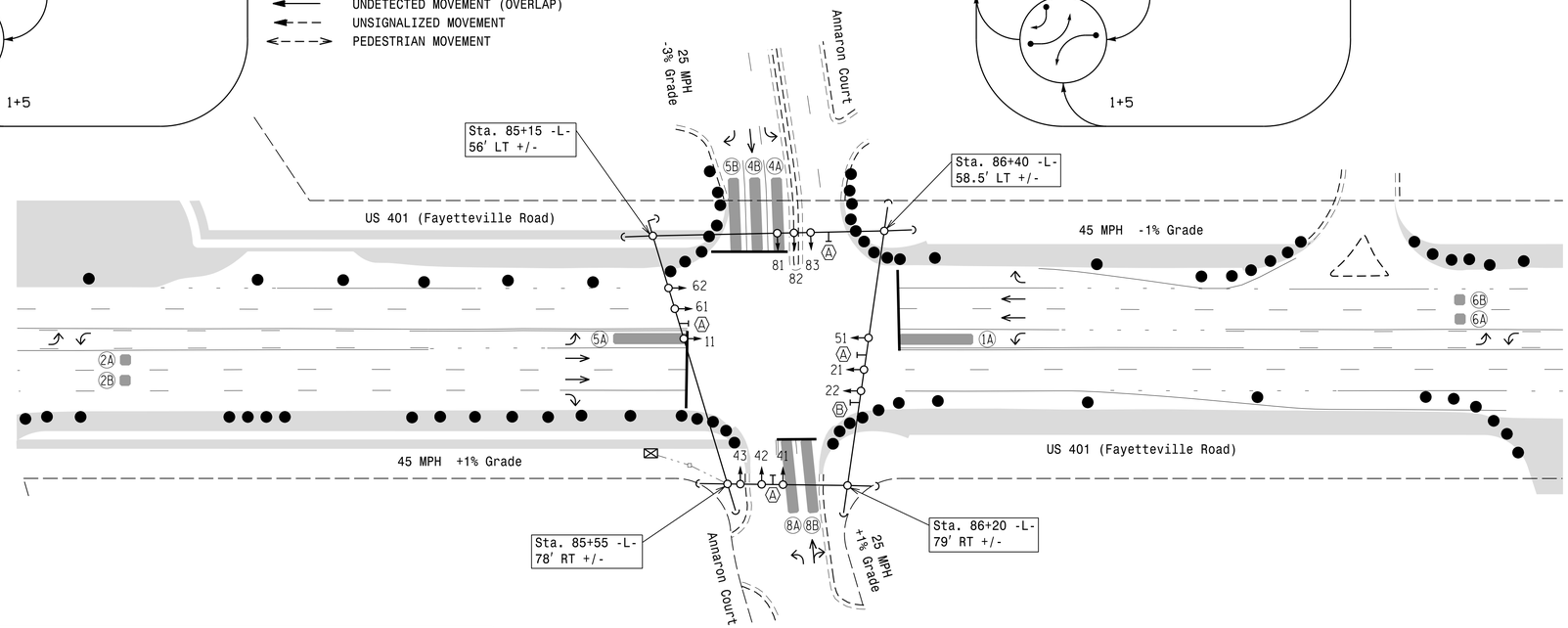

LEGEND

PROPOSED		EXISTING
○→	Traffic Signal Head	●→
◐→	Modified Signal Head	N/A
⊣	Sign	⊣
-□-	Pedestrian Signal Head	■
○	Signal Pole with Guy	●
○ ◡	Signal Pole with Sidewalk Guy	● ◡
▭	Inductive Loop Detector	▭
⊠	Controller & Cabinet	⊠
□	Junction Box	■
·-·-·	2-in Underground Conduit	·-·-·
N/A	Right of Way	– – –
→	Directional Arrow	→
▬	Non-Intrusive Detection Zone	▬
▬	Construction Zone	▬
●●	Construction Zone Drums	●●
Ⓐ	Street Name Sign (D3-1)	Ⓐ
Ⓑ	Right Arrow "ONLY" Sign (R3-5R)	Ⓑ

SE-PAC 2070 TIMING CHART

FEATURE	PHASE 1	2	4	5	6	8
Min Green *	7	12	7	7	12	7
Passage Gap *	2.0	6.0	2.0	2.0	6.0	2.0
Maximum Green *	20	75	30	20	75	30
Yellow Change	3.0	4.6	3.3	3.0	4.6	3.3
Red Clear	2.8	1.5	2.6	2.8	1.5	2.6
Walk *	-	-	-	-	-	-
Pedestrian Clear	-	-	-	-	-	-
Added Initial *	-	1.5	-	-	1.5	-
Maximum Initial *	-	34	-	-	34	-
Time Before Reduction *	-	15	-	-	15	-
Time To Reduce *	-	30	-	-	30	-
Minimum Gap	-	3.0	-	-	3.0	-
Recall Mode	-	MIN RECALL	-	-	MIN RECALL	-
Vehicle Call Memory	NON-LOCK	LOCK	NON-LOCK	NON-LOCK	LOCK	NON-LOCK
Dual Entry	-	-	ON	-	-	ON
Simultaneous Gap	ON	ON	ON	ON	ON	ON

* These values may be field adjusted. Do not adjust Min Green and Extension times for phases 2 and 6 lower than what is shown. Min Green for all other phases should not be lower than 4 seconds.

SE-PAC 2070 LOOP & DETECTOR UNIT INSTALLATION CHART

INDUCTIVE LOOPS: ZONE	SIZE (ft)	TURNS	DIST. FROM STOPBAR (ft)	NEW	EXISTING	DETECTOR PROGRAMMING: ASSIGNED PHASE	TIMING: DELAY	TIMING: EXTEND (STRETCH)	OPERATION MODE: VEHICLE	0 PEDESTRIAN	1 CALL	2 STOP A	3 STOP B	4 PASSER LEFT	5 PASSER THROUGH	6	7 AND	SWITCH	SYSTEM LOOPS	STATUS: NEW	EXISTING
1A	6X40	✳	0	X	-	1	5.0 SEC.	- SEC.	X	-	-	-	-	-	-	-	-	-	-	✳	-
2A	6X6	✳	300	X	-	2	- SEC.	- SEC.	X	-	-	-	-	-	-	-	-	-	-	✳	-
2B	6X6	✳	300	X	-	2	- SEC.	- SEC.	X	-	-	-	-	-	-	-	-	-	-	✳	-
4A	6X40	✳	0	X	-	4	- SEC.	- SEC.	X	-	-	-	-	-	-	-	-	-	-	✳	-
4B	6X40	✳	0	X	-	4	- SEC.	- SEC.	X	-	-	-	-	-	-	-	-	-	-	✳	-
5A	6X40	✳	0	X	-	5	5.0 SEC.	- SEC.	X	-	-	-	-	-	-	-	-	-	-	✳	-
5B	6X40	✳	0	X	-	5	15.0SEC.	- SEC.	X	-	-	-	-	-	-	-	-	-	-	✳	-
6A	6X6	✳	300	X	-	6	- SEC.	- SEC.	X	-	-	-	-	-	-	-	-	-	-	✳	-
6B	6X6	✳	300	X	-	6	- SEC.	- SEC.	X	-	-	-	-	-	-	-	-	-	-	✳	-
8A	6X40	✳	0	X	-	8	3.0 SEC.	- SEC.	X	-	-	-	-	-	-	-	-	-	-	✳	-
8B	6X40	✳	0	X	-	8	10.0SEC.	- SEC.	X	-	-	-	-	-	-	-	-	-	-	✳	-

* Non-intrusive detection zone.

Signal Upgrade - Temporary Design 1 (TMP Phases I & II)

DOCUMENT NOT CONSIDERED FINAL UNLESS ALL SIGNATURES COMPLETED

Prepared In the Offices of:
Transportation Mobility and Safety Division
NORTH CAROLINA DEPARTMENT OF TRANSPORTATION
Signal Design Section
750 N.Greenfield Pkwy.Garner,NC 27529

US 401 (Fayetteville Road) at Annaron Court

Division 5 Wake County Raleigh

PLAN DATE: February 2025 REVIEWED BY:

PREPARED BY: J.A. Lohr REVIEWED BY:

SCALE 0 40 1"=40'

REVISIONS	INIT.	DATE

SEAL
NORTH CAROLINA PROFESSIONAL SEAL 026486 ENGINEER ROBERT J. ZIEMBA

DocuSigned by: Robert J. Ziemba 03/27/2025

SIG. INVENTORY NO. 05-1714TI

21-MAR-2025 14:59
M:\Groups\TEC\HITS&SU\ITS Signals\Signal Design Section\Central Region\Div 5\U-5302\2025 Updates\U5171411_sig_dsn_2025mmdd.dgn
JALohr

PROJECT REFERENCE NO.	SHEET NO.
U-5302	Sig. 18.1

18 CHANNEL CONFLICT MONITOR PROGRAMMING DETAIL

(remove jumpers and set switches as shown)

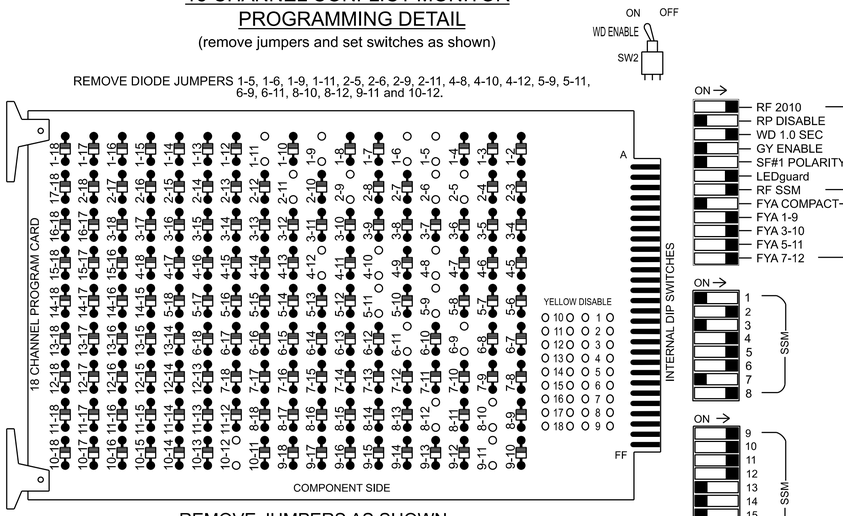

REMOVE JUMPERS AS SHOWN

NOTES:

1. Card is provided with all diode jumpers in place. Removal of any jumper allows its channels to run concurrently.
2. Ensure jumpers SEL2-SEL5 and SEL9 are present on the monitor board.
3. Ensure that the Red Enable is active at all times during normal operation.
4. Connect serial cable from conflict monitor to comm. port 1 of 2070 controller. Ensure conflict monitor communicates with 2070.

NOTES

1. To prevent "flash-conflict" problems, insert red flash program blocks for all vehicle load switches in the output file. The installer shall verify that signal heads flash in accordance with the Signal Plans.
2. Program controller to start up in phases 2 and 6 green Don't Walk.
3. Enable simultaneous gap-out feature for all phases.
4. Program phases 4 and 8 for dual entry.
5. Program phases 2 and 6 for volume density operation.
6. The cabinet and controller are part of the Raleigh City Signal System.

EQUIPMENT INFORMATION

Controller.....2070LX
Cabinet.....332 w/ Aux
Software.....SE-PAC2070 (version 5)
Cabinet Mount.....Base
Output File Positions.....18 With Aux. Output File
Load Switches Used.....S1, S2, S5, S7, S8, S11, AUX S1, AUX S2, AUX S4, AUX S5
Phases Used.....1, 2, 4, 5, 6, 8
Overlap "A".....*
Overlap "B".....*
Overlap "C".....*
Overlap "D".....*

*See overlap programming detail on sheet 2

SIGNAL HEAD HOOK-UP CHART

LOAD SWITCH NO.	S1	S2	S3	S4	S5	S6	S7		S8	S9	S10	S11	S12	AUX S1	AUX S2	AUX S3	AUX S4	AUX S5	AUX S6
CMU CHANNEL NO.	1	2	13	3	4	14	5		6	15	7	8	16	9	10	17	11	12	18
PHASE	1	2	2 PED	3	4	4 PED	5		6	6 PED	7	8	8 PED	OLA	OLB	SPARE	OLC	OLD	SPARE
SIGNAL HEAD NO.	11★	21,22	NU	NU	42,43	NU	43	51★	61,62	NU	NU	82,83	NU	11★	81★	NU	51★	41★	NU
RED		128			101		*		134			107							
YELLOW	*	129			102				135			108							
GREEN		130			103				136			109							
RED ARROW														A121	A124		A114	A101	
YELLOW ARROW							132							A122	A125		A115	A102	
FLASHING YELLOW ARROW														A123	A126		A116	A103	
GREEN ARROW	127						133	133											
✋																			
🚶																			

NU = Not Used
*Denotes install load resistor. See load resistor installation detail this sheet.
★See pictorial of head wiring in detail this sheet.

FYA SIGNAL WIRING DETAIL

(wire signal heads as shown)

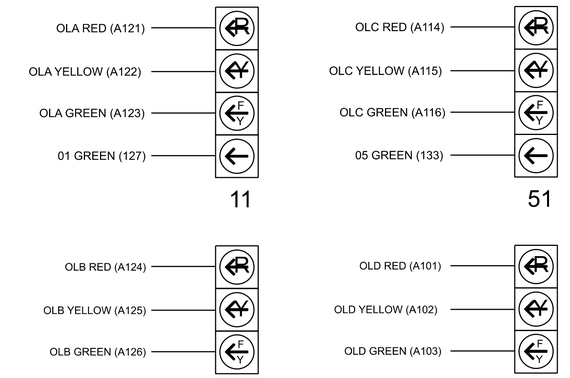

INPUT FILE POSITION LAYOUT

(front view)

		1	2	3	4	5	6	7	8	9	10	11	12	13	14
FILE "I"	U	SLOT EMPTY	SLOT EMPTY	SLOT EMPTY	SLOT EMPTY	SLOT EMPTY	SLOT EMPTY	SLOT EMPTY	SLOT EMPTY	SLOT EMPTY	SLOT EMPTY	SLOT EMPTY	SLOT EMPTY	SLOT EMPTY	FS DC ISOLATOR
	L														ST DC ISOLATOR
FILE "J"	U	SLOT EMPTY	SLOT EMPTY	SLOT EMPTY	SLOT EMPTY	SLOT EMPTY	SLOT EMPTY	SLOT EMPTY	SLOT EMPTY	SLOT EMPTY	SLOT EMPTY	SLOT EMPTY	SLOT EMPTY	SLOT EMPTY	SLOT EMPTY
	L														

EX. : 1A, 2A, ETC. = LOOP NO.'S

FS = FLASH SENSE
ST = STOP TIME

SPECIAL DETECTOR NOTE

Install non-intrusive detection system for vehicle detection. Perform installation according to manufacturer's directions and NCDOT engineer-approved mounting locations to accomplish the detection scheme shown on the Signal Design Plans.

LOAD RESISTOR INSTALLATION DETAIL

(install resistors as shown)

ACCEPTABLE VALUES	
Value (ohms)	Wattage
1.5K - 1.9K	25W (min)
2.0K - 3.0K	10W (min)

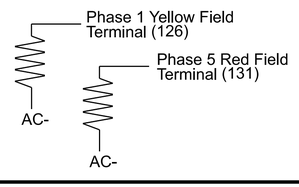

INIT & N.A. RESP PROGRAMMING DETAIL

(program controller as shown below)

1. From Main Menu select `3-PHASE DATA`
2. From PHASE DATA Submenu select `4-INIT & N.A. RESP+`

```
PHASE.....1...2...3...4...5...6...7...8
 INITIAL   1   4   0   1   1   4   0   1
 NA RESP   0   1   0   2   0   1   0   2
 UPDT GRN  0   0   0   0   0   0   0   0
CODES.....0....1....2...3...4...5...6
 INIL    NONE INACT RED YEL GRN DRK G/DW
 NA RSP NONE  NA1  NA2 1&2 --- --- ---
                                    ***
```

← Phases 3 & 7 NOT used!

INIT & N.A. RESP PROGRAMMING COMPLETE

THIS ELECTRICAL DETAIL IS FOR
THE SIGNAL DESIGN: 05-1714T1
DESIGNED: February 2025
SEALED: 3/27/2025
REVISED: N/A

Electrical Detail - Temporary Design 1 (TMP Phases I & II) - Sheet 1 of 3

DOCUMENT NOT CONSIDERED FINAL UNLESS ALL SIGNATURES COMPLETED

Electrical and Programming Details For:

US 401 (Fayetteville Road) at Annaron Court

Division 5 | Wake County | Raleigh

PLAN DATE: March 2025 | REVIEWED BY:

PREPARED BY: Tim Langston | REVIEWED BY:

REVISIONS	INIT.	DATE

Prepared in the Offices of:
Transportation Mobility and Safety Division
NORTH CAROLINA DEPARTMENT OF TRANSPORTATION
Signals Management Section
750 N. Greenfield Pkwy, Garner, NC 27529

SEAL
NORTH CAROLINA PROFESSIONAL SEAL 031001 ENGINEER D. TODD JOYCE

DocuSigned by: D. Todd Joyce 03/28/2025
A90CADEF8D424ED... DATE

SIG. INVENTORY NO. 05-1714T1

28-MAR-2025 08:49
dgn: K:\TPD\Projects\05-1714\Design Section\Division_05\05-1714\Signals Management\05171411_sm_ele_yyyymmdd.dgn
user: pwbenfley.com:ncdot-pw-01/Documents/NCDOT TSMO/Signal Design Section/Division_05/05-1714/Signals Management/05171411_sm_ele_yyyymmdd.dgn
ts: <ts_signature>

PROJECT REFERENCE NO.	SHEET NO.
U-5302	Sig. 18.2

OVERLAP PROGRAMMING DETAIL

(program controller as shown below)

1. From Main Menu select `4-UNIT DATA`
2. From UNIT DATA Submenu select `3-OVERLAP DATA`

Use Up/Dn/Left/Right keys to position cursor on the desired Overlap. Use the NEXT key to select the overlap type. Press the ENT key and then program as per the Overlap screen(s) shown.

```
OVERLAP DATA

   A: FYA   E: ---   I: ---   M: ---
   B: FYA   F: ---   J: ---   N: ---
   C: FYA   G: ---   K: ---   O: ---
   D: FYA   H: ---   L: ---   P: ---

 PREV/NEXT TO CYCLE
```

OVERLAP A

Use Up/Dn/Left/Right keys to position cursor on Overlap 'A', use the NEXT key to select 'FYA', then press ENT

```
FYA OVERLAP - A            MIN PERM:  1
     PHASES..12345678 90123456
PROT PHASES: 10000000 00000000  DELAY/10
PERM PHASES: 01000000 00000000   FYA:  0
-PED PHASES: 00000000 00000000  -PED: 30
   OVERLAPS..ABCDEFGH IJKLMNOP
PROT O-LAPS: x0000000 00000000
PERM O-LAPS: x0000000 00000000
```

← NOTICE FYA DELAY/10 = 0

Press ESC

OVERLAP B

Use Up/Dn/Left/Right keys to position cursor on Overlap 'B', use the NEXT key to select 'FYA', then press ENT

```
FYA OVERLAP - B            MIN PERM:  1
     PHASES..12345678 90123456
PROT PHASES: 00100000 00000000  DELAY/10
PERM PHASES: 00010000 00000000   FYA:  0
-PED PHASES: 00000000 00000000  -PED: 30
   OVERLAPS..ABCDEFGH IJKLMNOP
PROT O-LAPS: 0x000000 00000000
PERM O-LAPS: 0x000000 00000000
```

← NOTICE FYA DELAY/10 = 0

Press ESC

OVERLAP C

Use Up/Dn/Left/Right keys to position cursor on Overlap 'C', use the NEXT key to select 'FYA', then press ENT

```
FYA OVERLAP - C            MIN PERM:  1
     PHASES..12345678 90123456
PROT PHASES: 00001000 00000000  DELAY/10
PERM PHASES: 00000100 00000000   FYA:  0
-PED PHASES: 00000000 00000000  -PED: 30
   OVERLAPS..ABCDEFGH IJKLMNOP
PROT O-LAPS: 00x00000 00000000
PERM O-LAPS: 00x00000 00000000
```

← NOTICE FYA DELAY/10 = 0

Press ESC

OVERLAP D

Use Up/Dn/Left/Right keys to position cursor on Overlap 'D', use the NEXT key to select 'FYA', then press ENT

```
FYA OVERLAP - D            MIN PERM:  1
     PHASES..12345678 90123456
PROT PHASES: 00000010 00000000  DELAY/10
PERM PHASES: 00000001 00000000   FYA:  0
-PED PHASES: 00000000 00000000  -PED: 30
   OVERLAPS..ABCDEFGH IJKLMNOP
PROT O-LAPS: 000x0000 00000000
PERM O-LAPS: 000x0000 00000000
```

← NOTICE FYA DELAY/10 = 0

OVERLAP PROGRAMMING COMPLETE

REMOTE FLASH PROGRAMMING DETAIL

(program controller as shown below)

1. From Main Menu select `4-UNIT DATA`
2. From UNIT DATA Submenu select `2-FLASH`
3. From FLASH Submenu select `1-REMOTE FLASH SETTINGS`

```
REMOTE FLASH SETTINGS    TEST-A FLASH: 0

LDSW:123456789 0123456789 0123456789 012
FLSH:110010110 0101101100 0000000000 000
 ALT:010010100 0000001100 0000000000 000

0-DARK  1-RED  2-YELLOW  3-STEADY YELLOW
```

PRESS 'F' TO RETURN TO FLASH

4. From REMOTE FLASH Submenu select `2-REMOTE FLASH ENTRY/EXIT PHASES`

```
REMOTE FLASH  ENTRY/EXIT PHASES

      PHASES:  12345678 90123456
       ENTRY:  01000100 00000000
        EXIT:  01000100 00000000
```

REMOTE FLASH PROGRAMMING COMPLETE

ALL RED FLASH STARTUP PROGRAMMING DETAIL

(program controller as shown below)

1. From Main Menu select `4-UNIT DATA`
2. From UNIT DATA Submenu select `1-STARTUP & MISC`

```
STARTUP & MISC
STARTUP TIME.:  6 (SEC) STATE: 2 (0-FL
RED REV/10...: 40 (TSEC)         1-RED
AUTO PED CLR.:  0 (0-NO 1-YES)   2-RAF)
STOP T RESET.:  0 (0-NO 1-YES)
SEQUENCE.....:  1 (1-19)
SPECIAL SEQ  :  0 (SEE HELP)
```

STARTUP PROGRAMMING COMPLETE

PRESS 'F' TO RETURN TO UNIT DATA

FLASHER CIRCUIT MODIFICATION DETAIL

IN ORDER TO INSURE THAT SIGNALS FLASH CONCURRENTLY ON THE SAME APPROACH, MAKE THE FOLLOWING FLASHER CIRCUIT CHANGES:

1. ON REAR OF PDA - REMOVE WIRE FROM TERM. T2-4 AND TERMINATE ON T2-2.
2. ON REAR OF PDA - REMOVE WIRE FROM TERM. T2-5 AND TERMINATE ON T2-3.
3. REMOVE FLASHER UNIT 2.

THE CHANGES LISTED ABOVE TIES ALL PHASES AND OVERLAPS TO FLASHER UNIT 1.

THIS ELECTRICAL DETAIL IS FOR
THE SIGNAL DESIGN: 05-1714T1
DESIGNED: February 2025
SEALED: 3/27/2025
REVISED: N/A

DOCUMENT NOT CONSIDERED FINAL UNLESS ALL SIGNATURES COMPLETED

Electrical and Programming Details For:

Prepared in the Offices of:

Transportation Mobility and Safety Division
Traffic Engineering Branch
Signals & Signal Management Section
DEPT. OF TRANSPORTATION

750 N. Greenfield Pkwy, Garner, NC 27529

US 401 (Fayetteville Road)
at
Annaron Court

Division 5 | Wake County | Raleigh

PLAN DATE:	March 2025	REVIEWED BY:	
PREPARED BY:	Tim Langston	REVIEWED BY:	

REVISIONS	INIT.	DATE

SEAL

NORTH CAROLINA PROFESSIONAL SEAL 031001 ENGINEER D. TODD JOYCE

DocuSigned by: D. Todd Joyce 03/28/2025
A80CADFDBD4241D... DATE

SIG. INVENTORY NO. 05-1714T1

28-MAR-2025 08:49
d:\projects\tmp\tmp_sheets\tmp_sheet_05-1714T1_sm.dgn
tslongston

e:\yyymmdd.dgn
tslongston
pw:\\pwbentley.com:ncdot-pw-01\Documents\NCDOT TSMD\Signal Design Section\Division_05\05-1714\Signals Management\05171411_sm_ele_yyymmdd.dgn

PROJECT REFERENCE NO.	SHEET NO.
U-5302	Sig. 18.3

PROGRAMMING DETAILS TO CALL ALTERNATE PHASING

To run the Alternate phasing, schedule a Day Plan that calls an Action that is programmed to enable Phase Function 1.

Actions can be programmed to run free run or call a coordination pattern.

PHASE FUNCTION MAPPING PROGRAMMING DETAIL

(program controller as shown below)

Step 1 - Assign OVERLAP A OMIT and OVERLAP C OMIT to Phase Function 1.

1. From Main Menu select `6-TIME BASE DATA`
2. From TIME BASE DATA Submenu select `9-PHS FUNC MAPPING`

Use Up/Dn Keys to position cursor on NUM 1

```
TIME BASE PHS FUNC MAPING
                PHS FUNC SEL(0-OFF/1-ON)
 NUM..P-FUNCT NAME.....123456789 0123456
   1  PHS-01 MAX # 2   000000000 0000000
   2  PHS-02 MAX # 2   000000000 0000000
   3  PHS-03 MAX # 2   000000000 0000000
   4  PHS-04 MAX # 2   000000000 0000000
 UP/DOWN TO SCROLL               E-EDIT
```

BEFORE PROCEEDING, SCROLL THRU ENTIRE RANGE OF FUNCTIONS TO ENSURE ALL P-FUNCT 1 NUM x VALUES ARE SET TO '0' (OFF)

Use Up/Dn/Left/Right keys to position cursor on NUM 145 and program P-FUNCT 1 as shown.

```
TIME BASE PHS FUNC MAPPING
                PHS FUNC SEL(0-OFF/1-ON)
 NUM..P-FUNCT NAME.....123456789 0123456
 145  OVERLAP A OMIT   100000000 0000000
 146  OVERLAP B OMIT   000000000 0000000
 147  OVERLAP C OMIT   100000000 0000000
 148  OVERLAP D OMIT   000000000 0000000
 UP/DOWN TO SCROLL               E-EDIT
```

← SET P-FUNCT 1 VALUE TO '1' (ON) AS SHOWN FOR OVERLAP A OMIT & OVERLAP C OMIT

PHASE FUNCTION PROGRAMMING COMPLETE

TIME BASE ACTIONS PROGRAMMING

(program controller as shown below)

Step 2 - Set up an Action to run Phase Function 1.

1. From Main Menu select `6-TIME BASE DATA`
2. From TIME BASE DATA Submenu select `5-ACTIONS`

```
TIME BASE ACTION # ***
                  123456789 0123456
  PATN:001   PHS: 100000000 0000000
   0=I'CONN  AUX: 000-----
   1-253=PATN SPC: 0000000-     0=NO
   254=FREE   DIM: 0-------     1=YES
   255=FLASH  DET: 000-----
 UP/DOWN TO SCROLL              E-EDIT
```

← NOTICE PHASE 1

SPECIAL FUNCTION PROGRAMMING COMPLETE

*** Action #(s) are to be determined by the Division and/or City Traffic Engineer and are scheduled to run in Day Plan(s).

THIS ELECTRICAL DETAIL IS FOR
THE SIGNAL DESIGN: 05-1714T1
DESIGNED: February 2025
SEALED: 3/27/2025
REVISED: N/A

Electrical Detail - Temporary Design 1 (TMP Phases I & II) - Sheet 3 of 3

DOCUMENT NOT CONSIDERED FINAL UNLESS ALL SIGNATURES COMPLETED

Electrical and Programming Details For:

US 401 (Fayetteville Road) at Annaron Court

Division 5 | Wake County | Raleigh

PLAN DATE: March 2025 | REVIEWED BY:

PREPARED BY: Tim Langston | REVIEWED BY:

REVISIONS	INIT.	DATE

Prepared in the Offices of:

Transportation Mobility and Safety Division, Traffic Engineering Branch, Signals & Signals Management Section, NC Department of Transportation

750 N. Greenfield Pkwy, Garner, NC 27529

SEAL

NORTH CAROLINA PROFESSIONAL SEAL 031001 ENGINEER D. TODD JOYCE

DocuSigned by: D. Todd Joyce 03/28/2025

SIG. INVENTORY NO. 05-1714T1

28-MAR-2025 08:50
mwilkinson
\\ncdot.gov\dfs\tpw\Traffic Engineering\Documents\NCDOT TSMO\Signal Design Section\Division_05\05-1714\Signals Management\05171411_sm.ele_yyyymmdd.dgn
tslongston

PROJECT REFERENCE NO.	SHEET NO.
U-5302	Sig. 19.0

PHASING DIAGRAM

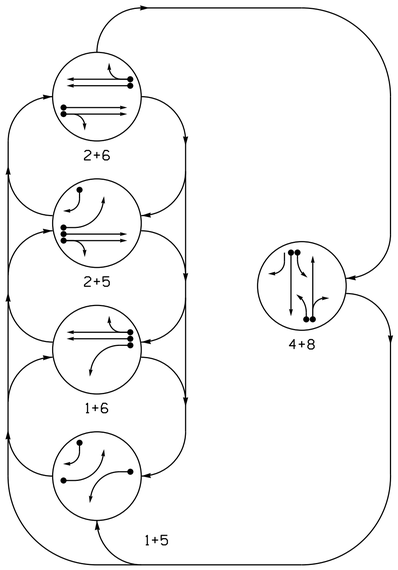

ALTERNATE PHASING TABLE OF OPERATION

SIGNAL FACE	PHASE 1+5	1+6	2+5	2+6	4+8	FLASH
11	←̶	←̶	R̶	R̶	R̶	R̶
21, 22	R	R	G	G	R	R
41	R̶	R̶	R̶	R̶	Y̶	R̶
42	R	R	R	R	G	R
43	R	R	R	R	G	R
51	←̶	R̶	←̶	R̶	R̶	R̶
61, 62	R	G	R	G	R	R
81	R̶	R̶	R̶	R̶	Y̶	R̶
82, 83	R	R	R	R	G	R

SE-PAC 2070 LOOP & DETECTOR UNIT INSTALLATION CHART

INDUCTIVE LOOPS						DETECTOR PROGRAMMING																	
							TIMING		OPERATION MODE												STATUS	
									0	1	2	3	4	5	6	7						
ZONE	SIZE (ft)	TURNS	DIST. FROM STOPBAR (ft)	NEW	EXISTING	ASSIGNED PHASE	DELAY	EXTEND (STRETCH)	VEHICLE	PEDESTRIAN	1 CALL	STOP A	STOP B	FREQ PER LEFT	FREQ PER THROUGH	AND	SWITCH	SYSTEM LOOPS	NEW	EXISTING
1A	6X40	✳	0	X	-	1	- SEC.	- SEC.	X	-	-	-	-	-	-	-	-	-	✳	-
2A	6X6	✳	300	X	-	2	- SEC.	- SEC.	X	-	-	-	-	-	-	-	-	-	-	✳
2B	6X6	✳	300	X	-	2	- SEC.	- SEC.	X	-	-	-	-	-	-	-	-	-	-	✳
4A	6X40	✳	0	X	-	4	3.0 SEC.	- SEC.	X	-	-	-	-	-	-	-	-	-	✳	-
4B	6X40	✳	0	X	-	4	- SEC.	- SEC.	X	-	-	-	-	-	-	-	-	-	-	✳
5A	6X40	✳	0	X	-	5	- SEC.	- SEC.	X	-	-	-	-	-	-	-	-	-	✳	-
5B	6X40	✳	0	X	-	5	15.0 SEC.	- SEC.	X	-	-	-	-	-	-	-	-	-	-	✳
6A	6X6	✳	300	X	-	6	- SEC.	- SEC.	X	-	-	-	-	-	-	-	-	-	-	✳
6B	6X6	✳	300	X	-	6	- SEC.	- SEC.	X	-	-	-	-	-	-	-	-	-	-	✳
8A	6X40	✳	0	X	-	8	3.0 SEC.	- SEC.	X	-	-	-	-	-	-	-	-	-	✳	-
8B	6X40	✳	0	X	-	8	10.0 SEC.	- SEC.	X	-	-	-	-	-	-	-	-	-	✳	-

* Non-intrusive detection zone.

5 Phase
Fully Actuated
(Raleigh Signal System)

NOTES

1. Refer to "Roadway Standard Drawings NCDOT" dated January 2024 and "Standard Specifications for Roads and Structures" dated January 2024.
2. Do not program signal for late night flashing operation unless otherwise directed by the Engineer.
3. Phase 1 and/or 5 may be lagged.
4. Reposition existing signal heads numbered 11, 21, 22, 51, 61, and 62.
5. Set all detector units to presence mode.
6. This intersection uses non-intrusive detection. Install detectors according to the manufacturer's instructions to achieve the desired detection.
7. Maximum times shown in timing chart are for free-run operation only. Coordinated signal system timing values supersede these values.

PHASING DIAGRAM DETECTION LEGEND

- DETECTED MOVEMENT
- UNDETECTED MOVEMENT (OVERLAP)
- UNSIGNALIZED MOVEMENT
- PEDESTRIAN MOVEMENT

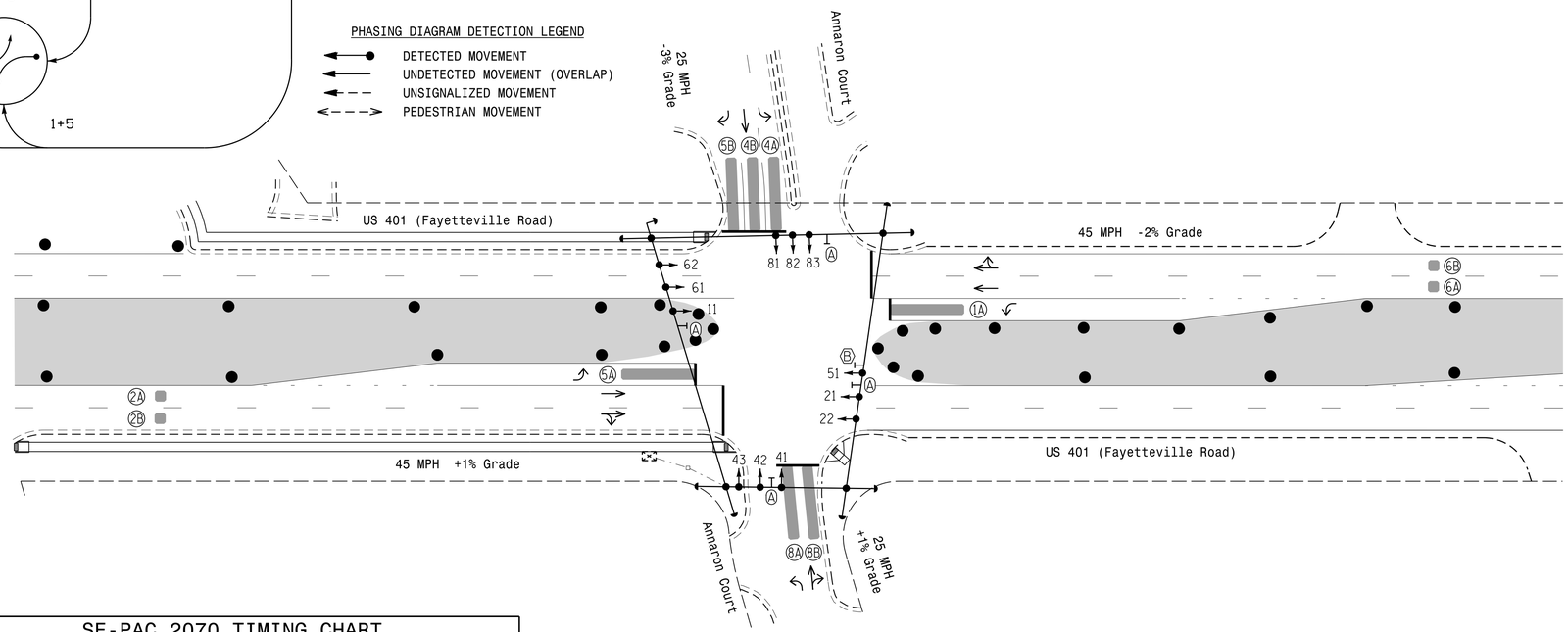

SE-PAC 2070 TIMING CHART

FEATURE	PHASE 1	2	4	5	6	8
Min Green *	7	12	7	7	12	7
Passage Gap *	2.0	6.0	2.0	2.0	6.0	2.0
Maximum Green *	20	75	35	20	75	35
Yellow Change	3.0	4.6	3.3	3.0	4.6	3.3
Red Clear	3.2	1.0	3.2	3.2	1.3	3.2
Walk *	-	-	-	-	-	-
Pedestrian Clear	-	-	-	-	-	-
Added Initial *	-	1.5	-	-	1.5	-
Maximum Initial *	-	34	-	-	34	-
Time Before Reduction *	-	15	-	-	15	-
Time To Reduce *	-	30	-	-	30	-
Minimum Gap	-	3.0	-	-	3.0	-
Recall Mode	-	MIN RECALL	-	-	MIN RECALL	-
Vehicle Call Memory	NON-LOCK	LOCK	NON-LOCK	NON-LOCK	LOCK	NON-LOCK
Dual Entry	-	-	ON	-	-	ON
Simultaneous Gap	ON	ON	ON	ON	ON	ON

* These values may be field adjusted. Do not adjust Min Green and Extension times for phases 2 and 6 lower than what is shown. Min Green for all other phases should not be lower than 4 seconds.

SIGNAL FACE I.D.

All Heads L.E.D.

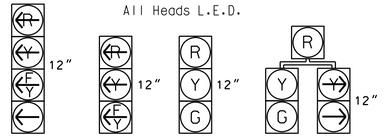

LEGEND

PROPOSED		EXISTING
○→	Traffic Signal Head	●→
◐→	Modified Signal Head	N/A
⊣	Sign	⊣
□→	Pedestrian Signal Head	■→
○—	Signal Pole with Guy	●—
○↓	Signal Pole with Sidewalk Guy	●↓
▭	Inductive Loop Detector	▭
⊠	Controller & Cabinet	⛶
□	Junction Box	■
·-·-·	2-in Underground Conduit	·-·-·
N/A	Right of Way	- - - - -
→	Directional Arrow	→
▬	Non-Intrusive Detection Zone	▬
▭	Construction Zone	▭
● ●	Construction Zone Drums	● ●
N/A	Wheelchair Ramp	♿
Ⓐ	Street Name Sign (D3-1)	Ⓐ
Ⓑ	"U-TURN YIELD TO RIGHT TURN" Sign (R10-16)	Ⓑ

Signal Upgrade - Temporary Design 2 (TMP Phases III & IV)

DOCUMENT NOT CONSIDERED FINAL UNLESS ALL SIGNATURES COMPLETED

Prepared In the Offices of:
Transportation Mobility and Safety Division
Signal Design Section
750 N.Greenfield Pkwy.Garner,NC 27529

US 401 (Fayetteville Road)
at
Annaron Court

Division 5 Wake County Raleigh

PLAN DATE: February 2025 REVIEWED BY:

PREPARED BY: J.A. Lohr REVIEWED BY:

SCALE 0 40 1"=40'

REVISIONS	INIT.	DATE

SEAL
NORTH CAROLINA PROFESSIONAL SEAL 026486 ENGINEER ROBERT J. ZIEMBA

DocuSigned by: Robert J Ziemba 03/27/2025
SIGNATURE DATE

SIG. INVENTORY NO. 05-1714T2

27-MAR-2025 15:00
k:\doh\ferconlon\Groups-TEC*ITS&SU*ITS Signals\Signal Design Section\Control Regions\Div 5\U-5302\2025 Updates\U5171472_sig_dsn_2025mmdd.dgn
JALOHr

PROJECT REFERENCE NO.	SHEET NO.
U-5302	Sig. 19.1

18 CHANNEL CONFLICT MONITOR PROGRAMMING DETAIL

(remove jumpers and set switches as shown)

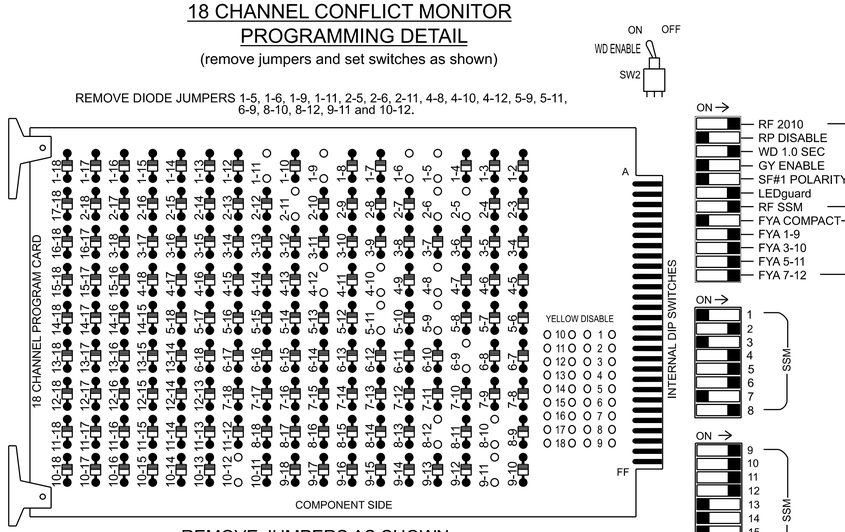

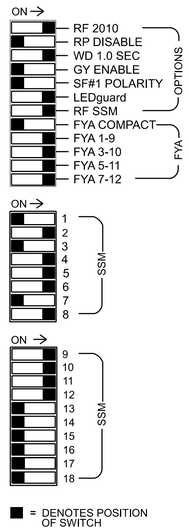

REMOVE JUMPERS AS SHOWN

NOTES:

1. Card is provided with all diode jumpers in place. Removal of any jumper allows its channels to run concurrently.
2. Ensure jumpers SEL2-SEL5 and SEL9 are present on the monitor board.
3. Ensure that the Red Enable is active at all times during normal operation.
4. Connect serial cable from conflict monitor to comm. port 1 of 2070 controller. Ensure conflict monitor communicates with 2070.

NOTES

1. To prevent "flash-conflict" problems, insert red flash program blocks for all vehicle load switches in the output file. The installer shall verify that signal heads flash in accordance with the Signal Plans.
2. Program controller to start up in phases 2 and 6 green Don't Walk.
3. Enable simultaneous gap-out feature for all phases.
4. Program phases 4 and 8 for dual entry.
5. Program phases 2 and 6 for volume density operation.
6. The cabinet and controller are part of the Raleigh City Signal System.

EQUIPMENT INFORMATION

Controller.....2070LX
Cabinet.....332 w/ Aux
Software.....SE-PAC2070 (version 5)
Cabinet Mount.....Base
Output File Positions.....18 With Aux. Output File
Load Switches Used.....S1, S2, S5, S7, S8, S11, AUX S1, AUX S2, AUX S4, AUX S5
Phases Used.....1, 2, 4, 5, 6, 8
Overlap "A".....*
Overlap "B".....*
Overlap "C".....*
Overlap "D".....*

*See overlap programming detail on sheet 2

SIGNAL HEAD HOOK-UP CHART

LOAD SWITCH NO.	S1	S2	S3	S4	S5	S6	S7		S8	S9	S10	S11	S12	AUX S1	AUX S2	AUX S3	AUX S4	AUX S5	AUX S6
CMU CHANNEL NO.	1	2	13	3	4	14	5		6	15	7	8	16	9	10	17	11	12	18
PHASE	1	2	2 PED	3	4	4 PED	5		6	6 PED	7	8	8 PED	OLA	OLB	SPARE	OLC	OLD	SPARE
SIGNAL HEAD NO.	11★	21,22	NU	NU	42,43	NU	43	51★	61,62	NU	NU	82,83	NU	11★	81★	NU	51★	41★	NU
RED		128			101		*		134			107							
YELLOW	*	129			102				135			108							
GREEN		130			103				136			109							
RED ARROW														A121	A124		A114	A101	
YELLOW ARROW							132							A122	A125		A115	A102	
FLASHING YELLOW ARROW														A123	A126		A116	A103	
GREEN ARROW	127						133	133											
✋																			
🚶																			

NU = Not Used
*Denotes install load resistor. See load resistor installation detail this sheet.
★See pictorial of head wiring in detail this sheet.

FYA SIGNAL WIRING DETAIL

(wire signal heads as shown)

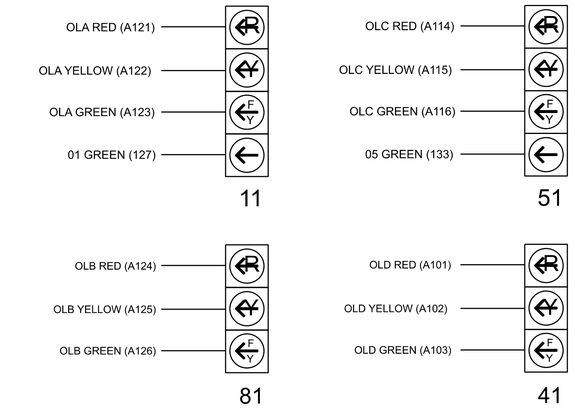

INPUT FILE POSITION LAYOUT

(front view)

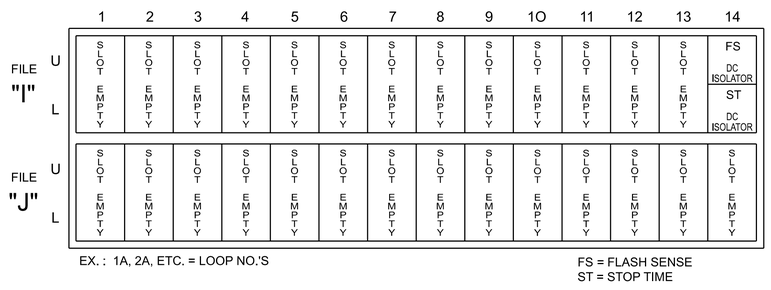

SPECIAL DETECTOR NOTE

Install non-intrusive detection system for vehicle detection. Perform installation according to manufacturer's directions and NCDOT engineer-approved mounting locations to accomplish the detection scheme shown on the Signal Design Plans.

! FULL-TIME ALTERNATE PHASING NOTE !

To run the controller in Alternate Phasing at all times, refer to page 3.

LOAD RESISTOR INSTALLATION DETAIL

(install resistors as shown)

ACCEPTABLE VALUES	
Value (ohms)	Wattage
1.5K - 1.9K	25W (min)
2.0K - 3.0K	10W (min)

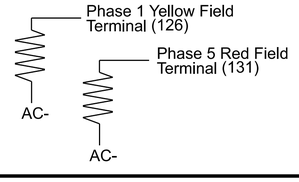

INIT & N.A. RESP PROGRAMMING DETAIL

(program controller as shown below)

1. From Main Menu select `3-PHASE DATA`
2. From PHASE DATA Submenu select `4-INIT & N.A. RESP+`

```
PHASE.....1...2...3...4...5...6...7...8
 INITIAL   1   4   0   1   1   4   0   1
 NA RESP   0   1   0   2   0   1   0   2
 UPDT GRN  0   0   0   0   0   0   0   0
CODES.....0....1....2...3...4...5...6
 INIL    NONE INACT RED YEL GRN DRK G/DW
 NA RSP NONE  NA1  NA2 1&2 --- --- ---
                                    ***
```

← Phases 3 & 7 NOT used!

INIT & N.A. RESP PROGRAMMING COMPLETE

THIS ELECTRICAL DETAIL IS FOR
THE SIGNAL DESIGN: 05-1714T2
DESIGNED: February 2025
SEALED: 3/27/2025
REVISED: N/A

Electrical Detail - Temporary Design 2 (TMP Phases III & IV)
Sheet 1 of 3

DOCUMENT NOT CONSIDERED FINAL UNLESS ALL SIGNATURES COMPLETED

Electrical and Programming Details For:

US 401 (Fayetteville Road) at Annaron Court

Division 5 | Wake County | Raleigh

PLAN DATE: March 2025 | REVIEWED BY:
PREPARED BY: Tim Langston | REVIEWED BY:

REVISIONS	INIT.	DATE

Prepared in the Offices of:
Traffic Engineering Branch, Traffic Engineering Unit, Traffic Signal & Signage Management Section, Transportation Mobility and Safety Division, NC DEPARTMENT OF TRANSPORTATION
750 N. Greenfield Pkwy, Garner, NC 27529

SEAL
NORTH CAROLINA PROFESSIONAL ENGINEER SEAL 031001 D. TODD JOYCE

DocuSigned by: D. Todd Joyce 03/28/2025
A90CADEFB0F643D... DATE

SIG. INVENTORY NO. 05-1714T2

28-MAR-2025 08:55
d:\projects\kimley.com\ncdot-pw-01\Documents\NCDOT TSMO\Signal Design Section\Division_05\05-1714\Signals Management\05171412_sm_ele_yyyymmdd.dgn
tslangston

PROJECT REFERENCE NO.	SHEET NO.
U-5302	Sig. 19.2

OVERLAP PROGRAMMING DETAIL

(program controller as shown below)

1. From Main Menu select `4-UNIT DATA`
2. From UNIT DATA Submenu select `3-OVERLAP DATA`

Use Up/Dn/Left/Right keys to position cursor on the desired Overlap. Use the NEXT key to select the overlap type. Press the ENT key and then program as per the Overlap screen(s) shown.

```
OVERLAP DATA

   A: FYA   E: ---   I: ---   M: ---
   B: FYA   F: ---   J: ---   N: ---
   C: FYA   G: ---   K: ---   O: ---
   D: FYA   H: ---   L: ---   P: ---

 PREV/NEXT TO CYCLE
```

OVERLAP A

Use Up/Dn/Left/Right keys to position cursor on Overlap 'A', use the NEXT key to select 'FYA', then press ENT

```
FYA OVERLAP - A            MIN PERM:  1
     PHASES..12345678 90123456
PROT PHASES: 10000000 00000000  DELAY/10
PERM PHASES: 01000000 00000000   FYA:  0
-PED PHASES: 00000000 00000000  -PED: 30
   OVERLAPS..ABCDEFGH IJKLMNOP
PROT O-LAPS: x0000000 00000000
PERM O-LAPS: x0000000 00000000
```

← NOTICE FYA DELAY/10 = 0

Press ESC

OVERLAP B

Use Up/Dn/Left/Right keys to position cursor on Overlap 'B', use the NEXT key to select 'FYA', then press ENT

```
FYA OVERLAP - B            MIN PERM:  1
     PHASES..12345678 90123456
PROT PHASES: 00100000 00000000  DELAY/10
PERM PHASES: 00010000 00000000   FYA:  0
-PED PHASES: 00000000 00000000  -PED: 30
   OVERLAPS..ABCDEFGH IJKLMNOP
PROT O-LAPS: 0x000000 00000000
PERM O-LAPS: 0x000000 00000000
```

← NOTICE FYA DELAY/10 = 0

Press ESC

OVERLAP C

Use Up/Dn/Left/Right keys to position cursor on Overlap 'C', use the NEXT key to select 'FYA', then press ENT

```
FYA OVERLAP - C            MIN PERM:  1
     PHASES..12345678 90123456
PROT PHASES: 00001000 00000000  DELAY/10
PERM PHASES: 00000100 00000000   FYA:  0
-PED PHASES: 00000000 00000000  -PED: 30
   OVERLAPS..ABCDEFGH IJKLMNOP
PROT O-LAPS: 00x00000 00000000
PERM O-LAPS: 00x00000 00000000
```

← NOTICE FYA DELAY/10 = 0

Press ESC

OVERLAP D

Use Up/Dn/Left/Right keys to position cursor on Overlap 'D', use the NEXT key to select 'FYA', then press ENT

```
FYA OVERLAP - D            MIN PERM:  1
     PHASES..12345678 90123456
PROT PHASES: 00000010 00000000  DELAY/10
PERM PHASES: 00000001 00000000   FYA:  0
-PED PHASES: 00000000 00000000  -PED: 30
   OVERLAPS..ABCDEFGH IJKLMNOP
PROT O-LAPS: 000x0000 00000000
PERM O-LAPS: 000x0000 00000000
```

← NOTICE FYA DELAY/10 = 0

OVERLAP PROGRAMMING COMPLETE

REMOTE FLASH PROGRAMMING DETAIL

(program controller as shown below)

1. From Main Menu select `4-UNIT DATA`
2. From UNIT DATA Submenu select `2-FLASH`
3. From FLASH Submenu select `1-REMOTE FLASH SETTINGS`

```
REMOTE FLASH SETTINGS    TEST-A FLASH: 0

LDSW:123456789 0123456789 0123456789 012
FLSH:110010110 0101101100 0000000000 000
 ALT:010010100 0000001100 0000000000 000

0-DARK  1-RED  2-YELLOW  3-STEADY YELLOW
```

PRESS 'F' TO RETURN TO FLASH

4. From REMOTE FLASH Submenu select `2-REMOTE FLASH ENTRY/EXIT PHASES`

```
REMOTE FLASH  ENTRY/EXIT PHASES

      PHASES:  12345678 90123456
       ENTRY:  01000100 00000000
        EXIT:  01000100 00000000
```

REMOTE FLASH PROGRAMMING COMPLETE

ALL RED FLASH STARTUP PROGRAMMING DETAIL

(program controller as shown below)

1. From Main Menu select `4-UNIT DATA`
2. From UNIT DATA Submenu select `1-STARTUP & MISC`

```
STARTUP & MISC
STARTUP TIME.:  6 (SEC) STATE: 2 (0-FL
RED REV/10...: 40 (TSEC)          1-RED
AUTO PED CLR.:  0 (0-NO 1-YES)    2-RAF)
STOP T RESET.:  0 (0-NO 1-YES)
SEQUENCE.....:  1 (1-19)
SPECIAL SEQ  :  0 (SEE HELP)
```

STARTUP PROGRAMMING COMPLETE

PRESS 'F' TO RETURN TO UNIT DATA

FLASHER CIRCUIT MODIFICATION DETAIL

IN ORDER TO INSURE THAT SIGNALS FLASH CONCURRENTLY ON THE SAME APPROACH, MAKE THE FOLLOWING FLASHER CIRCUIT CHANGES:

1. ON REAR OF PDA - REMOVE WIRE FROM TERM. T2-4 AND TERMINATE ON T2-2.
2. ON REAR OF PDA - REMOVE WIRE FROM TERM. T2-5 AND TERMINATE ON T2-3.
3. REMOVE FLASHER UNIT 2.

THE CHANGES LISTED ABOVE TIES ALL PHASES AND OVERLAPS TO FLASHER UNIT 1.

THIS ELECTRICAL DETAIL IS FOR
THE SIGNAL DESIGN: 05-1714T2
DESIGNED: February 2025
SEALED: 3/27/2025
REVISED: N/A

Electrical Detail - Temporary Design 2 (TMP Phases III & IV)
Sheet 2 of 3

DOCUMENT NOT CONSIDERED FINAL UNLESS ALL SIGNATURES COMPLETED

Electrical and Programming Details For:

Prepared in the Offices of:

Transportation Mobility and Safety Division
Traffic Engineering Branch
Traffic & Signals Management Section
NORTH CAROLINA DEPARTMENT OF TRANSPORTATION

750 N. Greenfield Pkwy, Garner, NC 27529

US 401 (Fayetteville Road)
at
Annaron Court

Division 5 | Wake County | Raleigh

PLAN DATE:	March 2025	REVIEWED BY:	
PREPARED BY:	Tim Langston	REVIEWED BY:	

REVISIONS	INIT.	DATE

SEAL
NORTH CAROLINA PROFESSIONAL SEAL 031001 ENGINEER D. TODD JOYCE

DocuSigned by: D. Todd Joyce 03/28/2025
A9CADEDB9D4A1D...
DATE

SIG. INVENTORY NO. 05-1714T2

28-MAR-2025 08:56
D:\Projects\tbentley.connidot+pw~01\Documents\NCDOT TSMD/Signal Design Section/Division_05/05-1714/Signals Management/05171412_sm_ele_yyyymmdd.dgn
tslangston

PROJECT REFERENCE NO.	SHEET NO.
U-5302	Sig. 19.3

PROGRAMMING DETAILS TO CALL ALTERNATE PHASING

To run the Alternate phasing, schedule a Day Plan that calls an Action that is programmed to enable Phase Function 1.

Actions can be programmed to run free run or call a coordination pattern.

PHASE FUNCTION MAPPING PROGRAMMING DETAIL

(program controller as shown below)

Step 1 - Assign OVERLAP A OMIT and OVERLAP C OMIT to Phase Function 1.

1. From Main Menu select `6-TIME BASE DATA`
2. From TIME BASE DATA Submenu select `9-PHS FUNC MAPPING`

Use Up/Dn Keys to position cursor on NUM 1

```
TIME BASE PHS FUNC MAPING
                PHS FUNC SEL(0-OFF/1-ON)
 NUM..P-FUNCT NAME.....123456789 0123456
   1  PHS-01 MAX # 2   000000000 0000000
   2  PHS-02 MAX # 2   000000000 0000000
   3  PHS-03 MAX # 2   000000000 0000000
   4  PHS-04 MAX # 2   000000000 0000000
 UP/DOWN TO SCROLL                E-EDIT
```

BEFORE PROCEEDING, SCROLL THRU ENTIRE RANGE OF FUNCTIONS TO ENSURE ALL P-FUNCT 1 NUM x VALUES ARE SET TO '0' (OFF)

Use Up/Dn/Left/Right keys to position cursor on NUM 145 and program P-FUNCT 1 as shown.

```
TIME BASE PHS FUNC MAPPING
                PHS FUNC SEL(0-OFF/1-ON)
 NUM..P-FUNCT NAME.....123456789 0123456
 145  OVERLAP A OMIT   100000000 0000000
 146  OVERLAP B OMIT   000000000 0000000
 147  OVERLAP C OMIT   100000000 0000000
 148  OVERLAP D OMIT   000000000 0000000
 UP/DOWN TO SCROLL                E-EDIT
```

← SET P-FUNCT 1 VALUE TO '1' (ON) AS SHOWN FOR OVERLAP A OMIT & OVERLAP C OMIT

PHASE FUNCTION PROGRAMMING COMPLETE

TIME BASE ACTIONS PROGRAMMING

(program controller as shown below)

Step 2 - Set up an Action to run Phase Function 1.

1. From Main Menu select `6-TIME BASE DATA`
2. From TIME BASE DATA Submenu select `5-ACTIONS`

```
TIME BASE ACTION # 001
                      123456789 0123456
  PATN:001      PHS: 100000000 0000000
   0=I'CONN     AUX: 000-----
   1-253=PATN   SPC: 0000000-      0=NO
   254=FREE     DIM: 0-------      1=YES
   255=FLASH    DET: 000-----
 UP/DOWN TO SCROLL                E-EDIT
```

← NOTICE PHASE 1

SPECIAL FUNCTION PROGRAMMING COMPLETE

Time Base Schedule Programming and Time Base Day Plan Programming (steps 3 and 4) are used to run Alternate Phasing at all times during TMP Phases III & IV.

TIME BASE SCHEDULE PROGRAMMING

(program controller as shown below)

Step 3 - Edit TIME BASE SCHEDULE #001 to be active all days of the week.

1. From Main Menu select `6-TIME BASE DATA`
2. From TIME BASE DATA Submenu select `3-SCHEDULE`

NOTICE ALL DAYS SET TO 1 →

```
TIME BASE SCHEDULE # 001
        SMTWTFS         JFMAMJJASOND
    DAY:1111111    MONTH:111111111111
       123456789 0123456789 0123456789 01
DATE:111111111 1111111111 1111111111 11
PLAN:001

 UP/DOWN TO SCROLL                E-EDIT
```

TIME BASE DAY PLAN PROGRAMMING

(program controller as shown below)

Step 4 - Edit TIME BASE DAY PLAN #001 to be active at all times.

1. From Main Menu select `6-TIME BASE DATA`
2. From TIME BASE DATA Submenu select `4-DAY PLAN`

NOTICE FIRST ACT SET TO 001 →

```
TIME BASE DAY PLAN # 001
NO HH:MM ACT  NO HH:MM ACT  NO HH:MM ACT
01 00 00 001  06 00 00 000  11 00 00 000
02 00 00 000  07 00 00 000  12 00 00 000
03 00 00 000  08 00 00 000  13 00 00 000
04 00 00 000  09 00 00 000  14 00 00 000
05 00 00 000  10 00 00 000  15 00 00 000
 UP/DOWN TO SCROLL                E-EDIT
```

! Ensure Time Base memory is cleared before programming the controller for the final design. To accomplish this, from the Main Menu, press 6-TIME BASE DATA, then 7-CLEAR MEMORY. Enter code "1" and press enter to delete SCHEDULE, then enter code "2" and press enter to delete DAY PLAN. !

THIS ELECTRICAL DETAIL IS FOR THE SIGNAL DESIGN: 05-1714T2
DESIGNED: February 2025
SEALED: 3/27/2025
REVISED: N/A

Electrical Detail - Temporary Design 2 (TMP Phases III & IV)
Sheet 3 of 3

DOCUMENT NOT CONSIDERED FINAL UNLESS ALL SIGNATURES COMPLETED

Electrical and Programming Details For:

US 401 (Fayetteville Road) at Annaron Court

Division 5 | Wake County | Raleigh

PLAN DATE: March 2025 | REVIEWED BY:

PREPARED BY: Tim Langston | REVIEWED BY:

REVISIONS	INIT.	DATE

Prepared in the Offices of:

Transportation Mobility and Safety Division, Traffic Engineering Branch, Signal & Signal Management Section, North Carolina Department of Transportation

750 N. Greenfield Pkwy, Garner, NC 27529

SEAL
NORTH CAROLINA PROFESSIONAL SEAL 031001 ENGINEER D. TODD JOYCE

DocuSigned by: D. Todd Joyce 03/28/2025
A90CAEFBD0E410...
DATE

SIG. INVENTORY NO. 05-1714T2

28-MAR-2025 14:17
D:\Projects\bentley.connectdot+pw~01\Documents\NCDOT TSMO\Signal Design Section\Division_05\05-1714\Signals Management\05171412_sm_ele_yyyymmdd.dgn
tslangston

PROJECT REFERENCE NO.	SHEET NO.
U-5302	Sig. 20.0

DEFAULT PHASING DIAGRAM

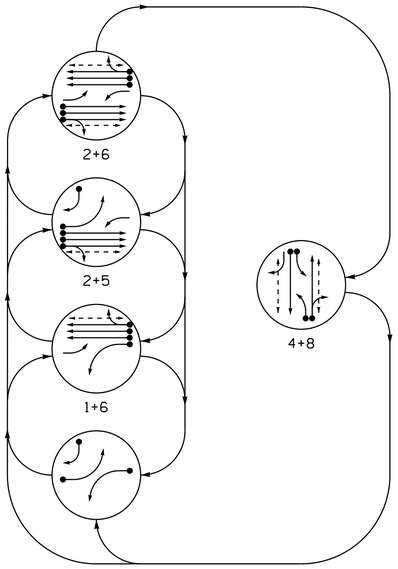

ALTERNATE PHASING DIAGRAM

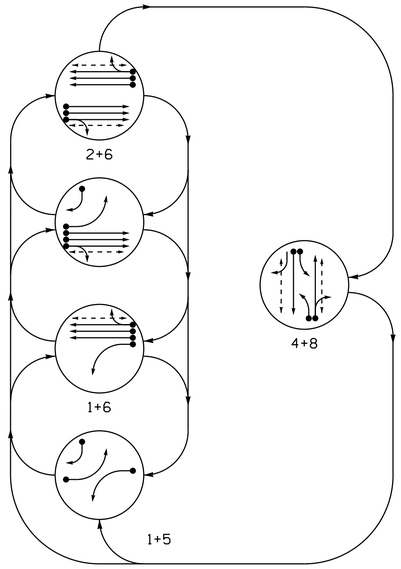

ALTERNATE PHASING TABLE OF OPERATION

SIGNAL FACE	PHASE 1+5	1+6	2+5	2+6	4+8	FLASH
11	←	←	~~R~~	~~R~~	~~R~~	~~R~~
21, 22, 23	R	R	G	G	R	R
41	~~R~~	~~R~~	~~R~~	~~R~~	F Y	~~R~~
42	R	R	R	R	G	R
43	R →	R	R →	R	G	R
51	←	~~R~~	←	~~R~~	~~R~~	~~R~~
61, 62, 63	R	G	R	G	R	R
81	~~R~~	~~R~~	~~R~~	~~R~~	F Y	~~R~~
82, 83	R	R	R	R	G	R
P21, P22	DW	DW	W	W	DW	DRK
P41, P42	DW	DW	DW	DW	W	DRK
P61, P62	DW	W	DW	W	DW	DRK
P81, P82	DW	DW	DW	DW	W	DRK

SE-PAC 2070 LOOP & DETECTOR UNIT INSTALLATION CHART

INDUCTIVE LOOPS						DETECTOR PROGRAMMING															
							TIMING		OPERATION MODE										STATUS	
LOOP / ZONE NO.	SIZE (ft)	TURNS	DIST. FROM STOPBAR (ft)	NEW	EXISTING	ASSIGNED PHASE	DELAY	EXTEND (STRETCH)	0 VEHICLE	1 PEDESTRIAN	2 CALL	3 STOP A	4 STOP B	5 PROTPER PASSTIME	6 PASSTIME THROUGH	7 AND	SWITCH	SYSTEM LOOPS	NEW	EXISTING
1A	6X40	2-4-2	0	X	-	1	5.0 SEC.	- SEC.	X	-	-	-	-	-	-	-	-	-	X	-
2A	6X6	4	300	X	-	2	- SEC.	- SEC.	X	-	-	-	-	-	-	-	-	-	X	-
2B	6X6	4	300	X	-	2	- SEC.	- SEC.	X	-	-	-	-	-	-	-	-	-	X	-
2C	6X6	4	300	X	-	2	- SEC.	- SEC.	X	-	-	-	-	-	-	-	-	-	X	-
4A	6X40	*	0	X	-	4	- SEC.	- SEC.	X	-	-	-	-	-	-	-	-	-	*	-
4B	6X40	*	0	X	-	4	- SEC.	- SEC.	X	-	-	-	-	-	-	-	-	-	*	-
5A	6X40	2-4-2	0	X	-	5	5.0 SEC.	- SEC.	X	-	-	-	-	-	-	-	-	-	X	-
5B	6X40	*	0	X	-	5	15.0 SEC.	- SEC.	X	-	-	-	-	-	-	-	-	-	*	-
6A	6X6	6	300	X	-	6	- SEC.	- SEC.	X	-	-	-	-	-	-	-	-	-	X	-
6B	6X6	6	300	X	-	6	- SEC.	- SEC.	X	-	-	-	-	-	-	-	-	-	X	-
6C	6X6	6	300	X	-	6	- SEC.	- SEC.	X	-	-	-	-	-	-	-	-	-	X	-
8A	6X40	2-4-2	0	X	-	8	3.0 SEC.	- SEC.	X	-	-	-	-	-	-	-	-	-	X	-
8B	6X40	2-4-2	0	X	-	8	10.0 SEC.	- SEC.	X	-	-	-	-	-	-	-	-	-	X	-

* Non-intrusive detection zone.

SIGNAL FACE I.D.

All Heads L.E.D.

11
51

41
81

21, 22, 23
42
61, 62, 63
82, 83

43

P21, P22
P41, P42
P61, P62
P81, P82

5 Phase
Fully Actuated
(Raleigh Signal System)

NOTES

1. Refer to "Roadway Standard Drawings NCDOT" dated January 2024 and "Standard Specifications for Roads and Structures" dated January 2024.
2. Do not program signal for late night flashing operation unless otherwise directed by the Engineer.
3. Phase 1 and/or 5 may be lagged.
4. Set all detector units to presence mode.
5. Omit "WALK" and flashing "DON'T WALK" with no pedestrian calls.
6. Program pedestrian heads to countdown the flashing "Don't Walk" time only.
7. This intersection features accessible pedestrian signals utilizing percussive tone walk indications and/or speech messages.
8. The City Traffic Engineer will determine the hours of use for each phasing plan.
9. This intersection uses non-intrusive detection. Install detectors according to the manufacturer's instructions to achieve the desired detection.
10. Maximum times shown in timing chart are for free-run operation only. Coordinated signal system timing values supersede these values.

DEFAULT PHASING TABLE OF OPERATION

SIGNAL FACE	PHASE 1+5	1+6	2+5	2+6	4+8	FLASH
11	←	←	F Y	F Y	~~R~~	~~R~~
21, 22, 23	R	R	G	G	R	R
41	~~R~~	~~R~~	~~R~~	~~R~~	F Y	~~R~~
42	R	R	R	R	G	R
43	R →	R	R →	R	G	R
51	←	F Y	←	F Y	~~R~~	~~R~~
61, 62, 63	R	G	R	G	R	R
81	~~R~~	~~R~~	~~R~~	~~R~~	F Y	~~R~~
82, 83	R	R	R	R	G	R
P21, P22	DW	DW	W	W	DW	DRK
P41, P42	DW	DW	DW	DW	W	DRK
P61, P62	DW	W	DW	W	DW	DRK
P81, P82	DW	DW	DW	DW	W	DRK

PHASING DIAGRAM DETECTION LEGEND

- DETECTED MOVEMENT
- UNDETECTED MOVEMENT (OVERLAP)
- UNSIGNALIZED MOVEMENT
- PEDESTRIAN MOVEMENT

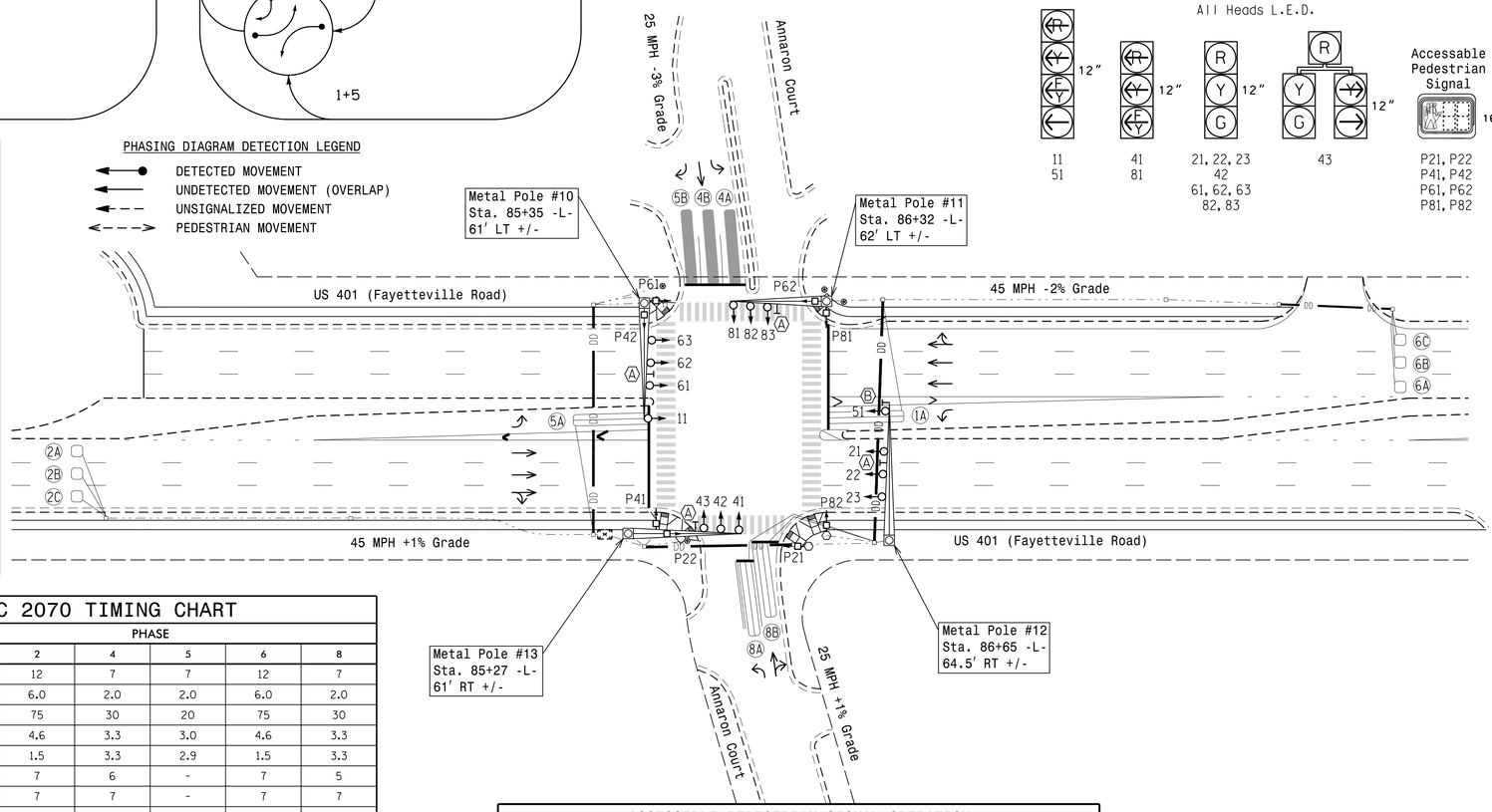

SE-PAC 2070 TIMING CHART

FEATURE	PHASE 1	2	4	5	6	8
Min Green *	7	12	7	7	12	7
Passage Gap *	2.0	6.0	2.0	2.0	6.0	2.0
Maximum Green *	20	75	30	20	75	30
Yellow Change	3.0	4.6	3.3	3.0	4.6	3.3
Red Clear	2.8	1.5	3.3	2.9	1.5	3.3
Advance Walk	-	7	6	-	7	5
Walk *	-	7	7	-	7	7
Pedestrian Clear	-	12	27	-	18	29
Added Initial *	-	1.5	-	-	1.5	-
Maximum Initial *	-	34	-	-	34	-
Time Before Reduction *	-	15	-	-	15	-
Time To Reduce *	-	30	-	-	30	-
Minimum Gap	-	3.0	-	-	3.0	-
Recall Mode	-	MIN RECALL	-	-	MIN RECALL	-
Vehicle Call Memory	NON-LOCK	LOCK	NON-LOCK	NON-LOCK	LOCK	NON-LOCK
Dual Entry	-	-	ON	-	-	ON
Simultaneous Gap	ON	ON	ON	ON	ON	ON

* These values may be field adjusted. Do not adjust Min Green and Extension times for phases 2 and 6 lower than what is shown. Min Green for all other phases should not be lower than 4 seconds.

ACCESSIBLE PEDESTRIAN SIGNAL OPERATION

SIGNAL FACE	VOICE	TONES	INTERVAL	SPEECH MESSAGE
P21, P22	-	X	Walk	(Percussive Tone)
	X	-	Flashing Don't Walk / Don't Walk	Wait. Wait to cross Annaron.
P41, P42	-	X	Walk	(Percussive Tone)
	X	-	Flashing Don't Walk / Don't Walk	Wait. Wait to cross Fayetteville.
P61, P62	-	X	Walk	(Percussive Tone)
	X	-	Flashing Don't Walk / Don't Walk	Wait. Wait to cross Annaron.
P81, P82	-	X	Walk	(Percussive Tone)
	X	-	Flashing Don't Walk / Don't Walk	Wait. Wait to cross Fayetteville.

LEGEND

PROPOSED		EXISTING
○→	Traffic Signal Head	●→
◐→	Modified Signal Head	N/A
⊣	Sign	⊣
□→	Pedestrian Signal Head	■→
○)	Signal Pole with Guy	●)
○ʃ	Signal Pole with Sidewalk Guy	●ʃ
▭	Inductive Loop Detector	▭
⊠	Controller & Cabinet	⊡
□	Junction Box	■
·-·-·	2-in Underground Conduit	·-·-·
N/A	Right of Way	———
→	Directional Arrow	→
◁○	Metal Pole with Mastarm	◁●
⊛	Type I Pushbutton Post	☢
⬡	Type II Signal Pedestal	⬢
▭	Non-Intrusive Detection Zone	▭
DD	Directional Drill	N/A
N/A	Curb Ramp	◢
Ⓐ	Street Name Sign (D3-1)	Ⓐ
Ⓑ	"U-TURN YIELD TO RIGHT TURN" Sign (R10-16)	Ⓑ

Signal Upgrade - Final Design

DOCUMENT NOT CONSIDERED FINAL UNLESS ALL SIGNATURES COMPLETED

Prepared In the Offices of:
Transportation Mobility and Safety Division
Signal Design Section
750 N.Greenfield Pkwy.Garner,NC 27529

US 401 (Fayetteville Road) at Annaron Court

Division 5 Wake County Raleigh

PLAN DATE: February 2025 REVIEWED BY:

PREPARED BY: J.A. Lohr REVIEWED BY:

REVISIONS	INIT.	DATE

SCALE 0 40 1"=40'

SEAL
NORTH CAROLINA PROFESSIONAL SEAL 026486 ENGINEER ROBERT J. ZIEMBA

DocuSigned by: Robert J Ziemba 05/27/2025
DATE

SIG. INVENTORY NO. 05-1714

22-MAY-2025 13:13
K:\TIMS\SIG\MTS Signals\Signal Design Section\Central Region\Div 5\U-5302\2025 Updates\U5051714_sig_dsn_2025mmdd.dgn
JALOHR

PROJECT REFERENCE NO.	SHEET NO.
U-5302	Sig. 20.1

18 CHANNEL CONFLICT MONITOR PROGRAMMING DETAIL

(remove jumpers and set switches as shown)

REMOVE DIODE JUMPERS 1-5, 1-6, 1-9, 1-11, 1-15, 2-5, 2-6, 2-9, 2-11, 2-13, 2-15, 4-8, 4-10, 4-12, 4-14, 4-16, 5-9, 5-11, 5-13, 6-9, 6-11, 6-13, 6-15, 8-10, 8-12, 8-14, 8-16, 9-11, 9-13, 9-15, 10-12, 10-14, 10-16, 11-13, 11-15, 12-14, 12-16, 13-15 and 14-16.

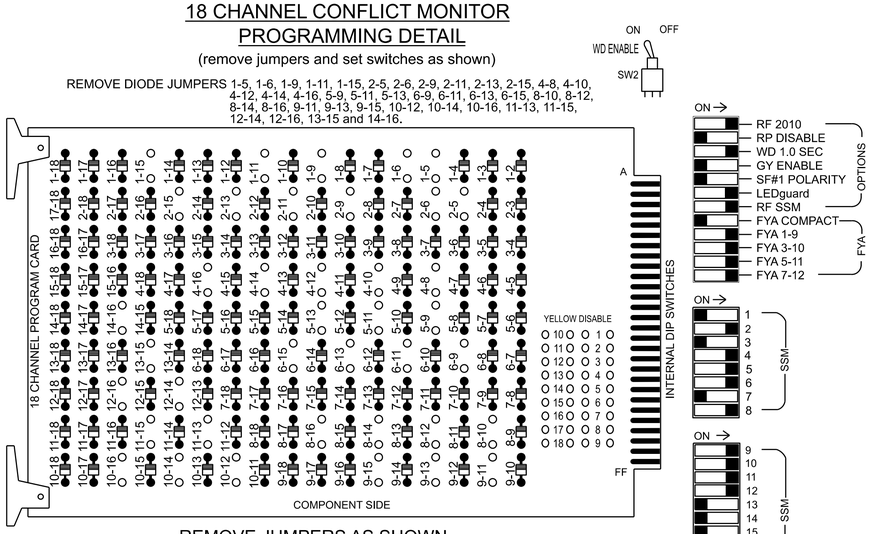

REMOVE JUMPERS AS SHOWN

NOTES:

1. Card is provided with all diode jumpers in place. Removal of any jumper allows its channels to run concurrently.
2. Ensure jumpers SEL2-SEL5 and SEL9 are present on the monitor board.
3. Ensure that the Red Enable is active at all times during normal operation.
4. Connect serial cable from conflict monitor to comm. port 1 of 2070 controller. Ensure conflict monitor communicates with 2070.

NOTES

1. To prevent "flash-conflict" problems, insert red flash program blocks for all vehicle load switches in the output file. The installer shall verify that signal heads flash in accordance with the Signal Plans.
2. Program controller to start up in phases 2 and 6 green Don't Walk.
3. Enable simultaneous gap-out feature for all phases.
4. Program phases 4 and 8 for dual entry.
5. Program phases 2 and 6 for volume density operation.
6. The cabinet and controller are part of the Raleigh City Signal System.

EQUIPMENT INFORMATION

Controller.....2070LX
Cabinet.....332 w/ Aux
Software.....SE-PAC2070 (version 5)
Cabinet Mount.....Base
Output File Positions.....18 With Aux. Output File
Load Switches Used.....S1, S2, S3, S5, S6, S7, S8, S9, S11, S12, AUX S1, AUX S2, AUX S4, AUX S5
Phases Used.....1, 2, 2PED, 4, 4PED, 5, 6, 6PED, 8, 8PED
Overlap "A".....*
Overlap "B".....*
Overlap "C".....*
Overlap "D".....*

*See overlap programming detail on sheet 2

SIGNAL HEAD HOOK-UP CHART

LOAD SWITCH NO.	S1	S2	S3	S4	S5	S6	S7		S8	S9	S10	S11	S12	AUX S1	AUX S2	AUX S3	AUX S4	AUX S5	AUX S6
CMU CHANNEL NO.	1	2	13	3	4	14	5		6	15	7	8	16	9	10	17	11	12	18
PHASE	1	2	2 PED	3	4	4 PED	5		6	6 PED	7	8	8 PED	OLA	OLB	SPARE	OLC	OLD	SPARE
SIGNAL HEAD NO.	11★	21,22 23	P21, P22	NU	42,43	P41, P42	43	51★	61,62 63	P61, P62	NU	82,83	P81, P82	11★	81★	NU	51★	41★	NU
RED		128			101		*		134			107							
YELLOW	*	129			102				135			108							
GREEN		130			103				136			109							
RED ARROW														A121	A124		A114	A101	
YELLOW ARROW							132							A122	A125		A115	A102	
FLASHING YELLOW ARROW														A123	A126		A116	A103	
GREEN ARROW	127						133	133											
✋			113			104				119			110						
🚶			115			106				121			112						

NU = Not Used
*Denotes install load resistor. See load resistor installation detail this sheet.
★See pictorial of head wiring in detail this sheet.

FYA SIGNAL WIRING DETAIL

(wire signal heads as shown)

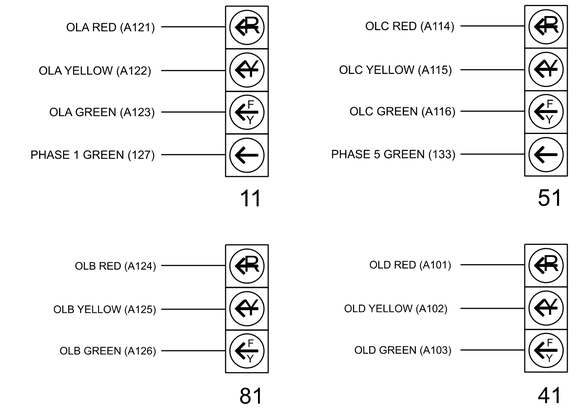

INPUT FILE POSITION LAYOUT

(front view)

		1	2	3	4	5	6	7	8	9	10	11	12	13	14
FILE "I"	U	Ø 1 1A	Ø 2 2A	Ø 2 2C	SLOT EMPTY	SLOT EMPTY	SLOT EMPTY	SLOT EMPTY	SLOT EMPTY	SLOT EMPTY	SLOT EMPTY	SLOT EMPTY	Ø 2 PED DC ISOLATOR	Ø 6 PED DC ISOLATOR	FS DC ISOLATOR
	L	NOT USED	Ø 2 2B	NOT USED									Ø 4 PED DC ISOLATOR	Ø 8 PED DC ISOLATOR	ST DC ISOLATOR
FILE "J"	U	Ø 5 5A	Ø 6 6A	Ø 6 6C	SLOT EMPTY	SLOT EMPTY	Ø 8 8A	SLOT EMPTY	SLOT EMPTY	SLOT EMPTY	SLOT EMPTY	SLOT EMPTY	SLOT EMPTY	SLOT EMPTY	SLOT EMPTY
	L	NOT USED	Ø 6 6B	NOT USED			Ø 8 8B								

EX. : 1A, 2A, ETC. = LOOP NO.'S

FS = FLASH SENSE
ST = STOP TIME

SPECIAL DETECTOR NOTE

For loops 4A, 4B & 5B, install non-intrusive detection system for vehicle detection. Perform installation according to manufacturer's directions and NCDOT engineer-approved mounting locations to accomplish the detection scheme shown on the Signal Design Plans.

LOAD RESISTOR INSTALLATION DETAIL

(install resistors as shown)

ACCEPTABLE VALUES	
Value (ohms)	Wattage
1.5K - 1.9K	25W (min)
2.0K - 3.0K	10W (min)

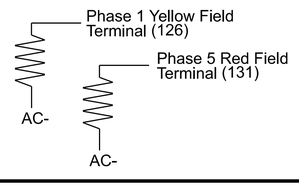

INPUT FILE CONNECTION & PROGRAMMING CHART

LOOP NO.	LOOP TERMINAL	INPUT FILE POS.	PIN NO.	DETECTOR NO.	NEMA PHASE	DELAY TIME	EXTEND (STRETCH) TIME
1A	TB2-1,2	I1U	56	1	1	5	
2A	TB2-5,6	I2U	39	3	2		
2B	TB2-7,8	I2L	43	4	2		
2C	TB2-9,10	I3U	63	5	2		
5A	TB3-1,2	J1U	55	19	5	5	
6A	TB3-5,6	J2U	40	21	6		
6B	TB3-7,8	J2L	44	22	6		
6C	TB3-9,10	J3U	64	23	6		
8A	TB5-9,10	J6U	42	31	8	3	
8B	TB5-11,12	J6L	46	32	8	10	
PED PUSH BUTTONS							
P21,P22	TB8-4,6	I12U	67	PED 2	2 PED		
P41,P42	TB8-5,6	I12L	69	PED 4	4 PED		
P61,P62	TB8-7,9	I13U	68	PED 6	6 PED		
P81,P82	TB8-8,9	I13L	70	PED 8	8 PED		

INPUT FILE POSITION LEGEND: J2L
FILE J
SLOT 2
LOWER

NOTE:
INSTALL DC ISOLATORS IN INPUT FILE SLOTS I12 AND I13.

INIT & N.A. RESP PROGRAMMING DETAIL

(program controller as shown below)

1. From Main Menu select `3-PHASE DATA`
2. From PHASE DATA Submenu select `4-INIT & N.A. RESP+`

```
PHASE.....1...2...3...4...5...6...7...8
 INITIAL   1   6   0   1   1   6   0   1
 NA RESP   0   1   0   2   0   1   0   2
 UPDT GRN  0   0   0   0   0   0   0   0
CODES.....0....1....2...3...4...5...6
 INIL    NONE INACT RED YEL GRN DRK G/DW
 NA RSP NONE  NA1  NA2 1&2 --- --- ---
                                    ***
```

← Phases 3 & 7 NOT used!

INIT & N.A. RESP PROGRAMMING COMPLETE

THIS ELECTRICAL DETAIL IS FOR
THE SIGNAL DESIGN: 05-1714
DESIGNED: February 2025
SEALED: 05/27/2025
REVISED: N/A

Electrical Detail - Sheet 1 of 3

DOCUMENT NOT CONSIDERED FINAL UNLESS ALL SIGNATURES COMPLETED

Electrical and Programming Details For:

US 401 (Fayetteville Road)
at
Annaron Court

Division 5 | Wake County | Raleigh

PLAN DATE: May 2025 | REVIEWED BY:
PREPARED BY: Tim Langston | REVIEWED BY:

REVISIONS	INIT.	DATE

Prepared in the Offices of:
Transportation Mobility and Safety Division
NORTH CAROLINA DEPARTMENT OF TRANSPORTATION
Traffic Engineering Branch
Traffic Signal Management Section
750 N. Greenfield Pkwy, Garner, NC 27529

SEAL
NORTH CAROLINA PROFESSIONAL SEAL 031001 ENGINEER D. TODD JOYCE

DocuSigned by: D. Todd Joyce 05/28/2025
DATE

SIG. INVENTORY NO. 05-1714

28-MAY-2025 09:56
M:\Traffic Signals\Projects\Raleigh\Raleigh_Projects\Signal Design Section\Division_05\05-1714\Signals Management\051714_sm.ele, yyyymmdd.dgn
tslongston

PROJECT REFERENCE NO.	SHEET NO.
U-5302	Sig. 20.2

OVERLAP PROGRAMMING DETAIL

(program controller as shown below)

1. From Main Menu select `4-UNIT DATA`
2. From UNIT DATA Submenu select `3-OVERLAP DATA`

Use Up/Dn/Left/Right keys to position cursor on the desired Overlap. Use the NEXT key to select the overlap type. Press the ENT key and then program as per the Overlap screen(s) shown.

```
OVERLAP DATA

   A: FYA   E: ---   I: ---   M: ---
   B: FYA   F: ---   J: ---   N: ---
   C: FYA   G: ---   K: ---   O: ---
   D: FYA   H: ---   L: ---   P: ---

 PREV/NEXT TO CYCLE
```

OVERLAP A

Use Up/Dn/Left/Right keys to position cursor on Overlap 'A', use the NEXT key to select 'FYA', then press ENT

```
FYA OVERLAP - A            MIN PERM:  1
     PHASES..12345678 90123456
PROT PHASES: 10000000 00000000  DELAY/10
PERM PHASES: 01000000 00000000   FYA:  0
-PED PHASES: 00000000 00000000  -PED: 30
   OVERLAPS..ABCDEFGH IJKLMNOP
PROT O-LAPS: x0000000 00000000
PERM O-LAPS: x0000000 00000000
```

← NOTICE FYA DELAY/10 = 0

Press ESC

OVERLAP B

Use Up/Dn/Left/Right keys to position cursor on Overlap 'B', use the NEXT key to select 'FYA', then press ENT

```
FYA OVERLAP - B            MIN PERM:  1
     PHASES..12345678 90123456
PROT PHASES: 00100000 00000000  DELAY/10
PERM PHASES: 00010000 00000000   FYA:  0
-PED PHASES: 00000000 00000000  -PED: 30
   OVERLAPS..ABCDEFGH IJKLMNOP
PROT O-LAPS: 0x000000 00000000
PERM O-LAPS: 0x000000 00000000
```

← NOTICE FYA DELAY/10 = 0

Press ESC

OVERLAP C

Use Up/Dn/Left/Right keys to position cursor on Overlap 'C', use the NEXT key to select 'FYA', then press ENT

```
FYA OVERLAP - C            MIN PERM:  1
     PHASES..12345678 90123456
PROT PHASES: 00001000 00000000  DELAY/10
PERM PHASES: 00000100 00000000   FYA:  0
-PED PHASES: 00000000 00000000  -PED: 30
   OVERLAPS..ABCDEFGH IJKLMNOP
PROT O-LAPS: 00x00000 00000000
PERM O-LAPS: 00x00000 00000000
```

← NOTICE FYA DELAY/10 = 0

Press ESC

OVERLAP D

Use Up/Dn/Left/Right keys to position cursor on Overlap 'D', use the NEXT key to select 'FYA', then press ENT

```
FYA OVERLAP - D            MIN PERM:  1
     PHASES..12345678 90123456
PROT PHASES: 00000010 00000000  DELAY/10
PERM PHASES: 00000001 00000000   FYA:  0
-PED PHASES: 00000000 00000000  -PED: 30
   OVERLAPS..ABCDEFGH IJKLMNOP
PROT O-LAPS: 000x0000 00000000
PERM O-LAPS: 000x0000 00000000
```

← NOTICE FYA DELAY/10 = 0

OVERLAP PROGRAMMING COMPLETE

REMOTE FLASH PROGRAMMING DETAIL

(program controller as shown below)

1. From Main Menu select `4-UNIT DATA`
2. From UNIT DATA Submenu select `2-FLASH`
3. From FLASH Submenu select `1-REMOTE FLASH SETTINGS`

```
REMOTE FLASH SETTINGS    TEST-A FLASH: 0

LDSW:123456789 0123456789 0123456789 012
FLSH:110010110 0101101100 0000000000 000
 ALT:010010100 0000001100 0000000000 000

0-DARK  1-RED  2-YELLOW  3-STEADY YELLOW
```

PRESS 'F' TO RETURN TO FLASH

4. From REMOTE FLASH Submenu select `2-REMOTE FLASH ENTRY/EXIT PHASES`

```
REMOTE FLASH  ENTRY/EXIT PHASES

      PHASES:  12345678 90123456
       ENTRY:  01000100 00000000
        EXIT:  01000100 00000000
```

REMOTE FLASH PROGRAMMING COMPLETE

ALL RED FLASH STARTUP PROGRAMMING DETAIL

(program controller as shown below)

1. From Main Menu select `4-UNIT DATA`
2. From UNIT DATA Submenu select `1-STARTUP & MISC`

```
STARTUP & MISC
STARTUP TIME.:  6 (SEC) STATE: 2 (0-FL
RED REV/10...: 40 (TSEC)          1-RED
AUTO PED CLR.:  0 (0-NO 1-YES)    2-RAF)
STOP T RESET.:  0 (0-NO 1-YES)
SEQUENCE.....:  1 (1-19)
SPECIAL SEQ  :  0 (SEE HELP)
```

STARTUP PROGRAMMING COMPLETE

FLASHER CIRCUIT MODIFICATION DETAIL

IN ORDER TO INSURE THAT SIGNALS FLASH CONCURRENTLY ON THE SAME APPROACH, MAKE THE FOLLOWING FLASHER CIRCUIT CHANGES:

1. ON REAR OF PDA - REMOVE WIRE FROM TERM. T2-4 AND TERMINATE ON T2-2.
2. ON REAR OF PDA - REMOVE WIRE FROM TERM. T2-5 AND TERMINATE ON T2-3.
3. REMOVE FLASHER UNIT 2.

THE CHANGES LISTED ABOVE TIES ALL PHASES AND OVERLAPS TO FLASHER UNIT 1.

THIS ELECTRICAL DETAIL IS FOR
THE SIGNAL DESIGN: 05-1714
DESIGNED: February 2025
SEALED: 05/27/2025
REVISED: N/A

Electrical Detail - Sheet 2 of 3

DOCUMENT NOT CONSIDERED FINAL UNLESS ALL SIGNATURES COMPLETED

Electrical and Programming Details For:

US 401 (Fayetteville Road) at Annaron Court

Division 5 | Wake County | Raleigh

PLAN DATE: May 2025 | REVIEWED BY:

PREPARED BY: Tim Langston | REVIEWED BY:

REVISIONS	INIT.	DATE

Prepared in the Offices of:

NCDOT Transportation Mobility and Safety Division, Traffic Engineering Branch, Signals Management Section

750 N. Greenfield Pkwy, Garner, NC 27529

SEAL
NORTH CAROLINA PROFESSIONAL SEAL 031001 ENGINEER D. TODD JOYCE

DocuSigned by: D. Todd Joyce 05/28/2025
SIGNATURE DATE

SIG. INVENTORY NO. 05-1714

27-MAY-2025 16:29
pw://ncdot-pw.bentley.com:ncdot-pw-01/Documents/NCDOT TSMD/Signal Design Section/Division_05/05-1714/Signals Management/051714_sm_ele_yyyymmdd.dgn
tslangston

PROJECT REFERENCE NO.	SHEET NO.
U-5302	Sig. 20.3

PROGRAMMING DETAILS TO CALL ALTERNATE PHASING

To run the Alternate phasing, schedule a Day Plan that calls an Action that is programmed to enable Phase Function 1.

Actions can be programmed to run free run or call a coordination pattern.

! Full-Time Alternate Phasing was used during the previous TMP phase. Before programming the controller's Time Base data, ensure Time Base memory is cleared. To accomplish this, from the Main Menu, press 6-TIME BASE DATA, then 7-CLEAR MEMORY. Enter code "1" and press enter to delete SCHEDULE, then enter code "2" and press enter to delete DAY PLAN. !

PHASE FUNCTION MAPPING PROGRAMMING DETAIL

(program controller as shown below)

Step 1 - Assign OVERLAP A OMIT and OVERLAP C OMIT to Phase Function 1.

1. From Main Menu select `6-TIME BASE DATA`
2. From TIME BASE DATA Submenu select `9-PHS FUNC MAPPING`

Use Up/Dn Keys to position cursor on NUM 1

```
TIME BASE PHS FUNC MAPING
                    PHS FUNC SEL(0-OFF/1-ON)
 NUM..P-FUNCT NAME.....123456789 0123456
   1  PHS-01 MAX # 2   000000000 0000000
   2  PHS-02 MAX # 2   000000000 0000000
   3  PHS-03 MAX # 2   000000000 0000000
   4  PHS-04 MAX # 2   000000000 0000000
 UP/DOWN TO SCROLL                E-EDIT
```

BEFORE PROCEEDING, SCROLL THRU ENTIRE RANGE OF FUNCTIONS TO ENSURE ALL P-FUNCT 1 NUM x VALUES ARE SET TO '0' (OFF)

Use Up/Dn/Left/Right keys to position cursor on NUM 145 and program P-FUNCT 1 as shown.

```
TIME BASE PHS FUNC MAPPING
                    PHS FUNC SEL(0-OFF/1-ON)
 NUM..P-FUNCT NAME.....123456789 0123456
 145  OVERLAP A OMIT   100000000 0000000
 146  OVERLAP B OMIT   000000000 0000000
 147  OVERLAP C OMIT   100000000 0000000
 148  OVERLAP D OMIT   000000000 0000000
 UP/DOWN TO SCROLL                E-EDIT
```

← SET P-FUNCT 1 VALUE TO '1' (ON) AS SHOWN FOR OVERLAP A OMIT & OVERLAP C OMIT

PHASE FUNCTION PROGRAMMING COMPLETE

TIME BASE ACTIONS PROGRAMMING

(program controller as shown below)

Step 2 - Set up an Action to run Phase Function 1.

1. From Main Menu select `6-TIME BASE DATA`
2. From TIME BASE DATA Submenu select `5-ACTIONS`

```
TIME BASE ACTION # ***
                    123456789 0123456
  PATN:001      PHS: 100000000 0000000
   0=I'CONN     AUX: 000-----
   1-253=PATN   SPC: 0000000-     0=NO
   254=FREE     DIM: 0-------     1=YES
   255=FLASH    DET: 000-----
 UP/DOWN TO SCROLL                E-EDIT
```

← NOTICE PHASE 1

SPECIAL FUNCTION PROGRAMMING COMPLETE

*** Action #(s) are to be determined by the Division and/or City Traffic Engineer and are scheduled to run in Day Plan(s).

ADVANCE WALK PED PROGRAMMING DETAIL

(program controller as shown below)

1. From Main Menu select `3-PHASE DATA`
2. From PHASE DATA Submenu select `3-PEDESTRIAN DATA`
3. From PEDESTRIAN DATA Submenu select `3-PED OFFSET+`

```
PHASE.....1...2...3...4...5...6...7...8
 WOFF/10   0  70   0  60   0  70   0  50
 MODE      0   0   0   0   0   0   0   0


CODES: * 0=ADVANCE 1=DELAY
```

ADVANCE WALK PED PROGRAMMING COMPLETE

ACCESSIBLE PEDESTRIAN SIGNAL (APS) INSTALLATION NOTES

1. Install push buttons and APS equipment per manufacturer's instructions.
2. Provide a dedicated cable to each push button per manufacturer's instructions.
3. If APS equipment is mounted in cabinet, use filtered power (i.e., Controller Receptacle) to power APS equipment. Do not use Equipment Receptacle, which is a GFCI outlet.
4. Never attempt to operate a standard contact closure push button with the APS system unless cabinet is re-wired for standard button operation or unless explicitly allowed by the manufacturer.
5. Place manufacturer's instructions in cabinet with cabinet prints, signal plans, and electrical details.
6. An APS push button station that is designed to work without the need for interfacing with a pedestrian signal head shall be installed for applications where a push button is installed in a median without a pedestrian signal head.
7. A push button with a single tactile arrow that points in both directions of travel shall be installed if the median separates two parallel crosswalks.

COUNTDOWN PEDESTRIAN SIGNAL OPERATION

Countdown Ped Signals are required to display timing only during Ped Clearance Interval. Consult Ped Signal Module user's manual for instructions on selecting this feature.

THIS ELECTRICAL DETAIL IS FOR
THE SIGNAL DESIGN: 05-1714
DESIGNED: February 2025
SEALED: 05/27/2025
REVISED: N/A

Electrical Detail - Sheet 3 of 3

DOCUMENT NOT CONSIDERED FINAL UNLESS ALL SIGNATURES COMPLETED

Electrical and Programming Details For:

US 401 (Fayetteville Road) at Annaron Court

Division 5 | Wake County | Raleigh

PLAN DATE: May 2025 | REVIEWED BY:

PREPARED BY: Tim Langston | REVIEWED BY:

REVISIONS	INIT.	DATE

Prepared in the Offices of:
Transportation Mobility and Safety Division
NORTH CAROLINA DEPARTMENT OF TRANSPORTATION
Traffic Engineering Branch
Traffic Signals Management Section
750 N. Greenfield Pkwy, Garner, NC 27529

SEAL
NORTH CAROLINA PROFESSIONAL SEAL 031001 ENGINEER D. TODD JOYCE

DocuSigned by: D. Todd Joyce 05/28/2025 DATE

SIG. INVENTORY NO. 05-1714

27-MAY-2025 16:30
dgn: c:\projects\pw.bentley.com:ncdot-pw-01\Documents\NCDOT TSMO\Signal Design Section\Division_05\05-1714\Signals Management\051714_sm_ele.yyyymmdd.dgn
pw:bentley.com:ncdot-pw-01\Documents\NCDOT TSMO\Signal Design Section\Division_05\05-1714\Signals Management\051714_sm_ele.yyyymmdd.dgn
tslongston

Design Loading for METAL POLE NO. 10

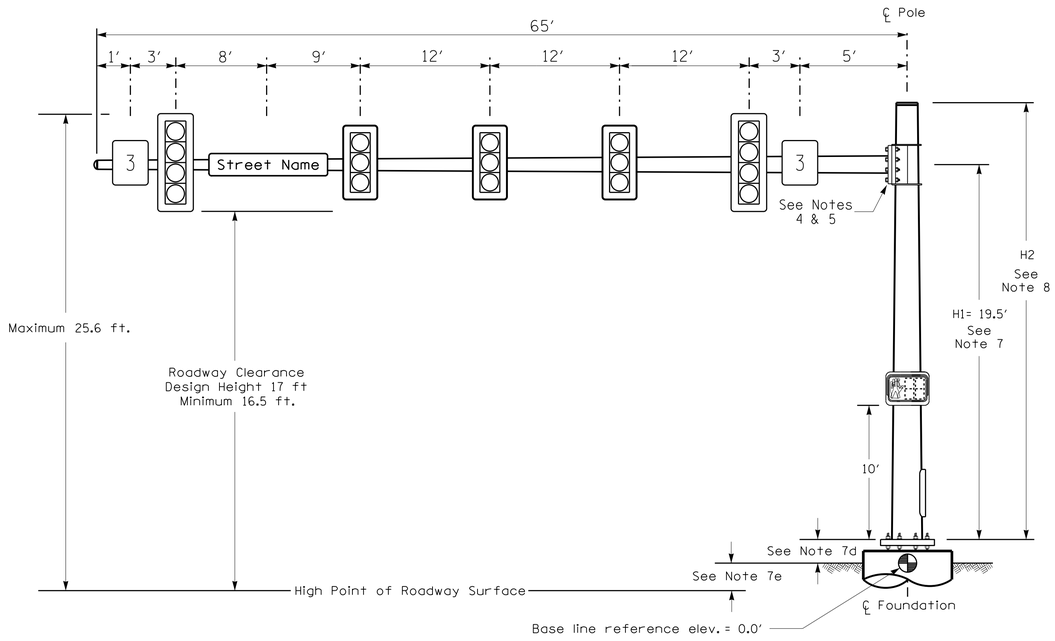

Elevation View

Design Loading for METAL POLE NO. 11

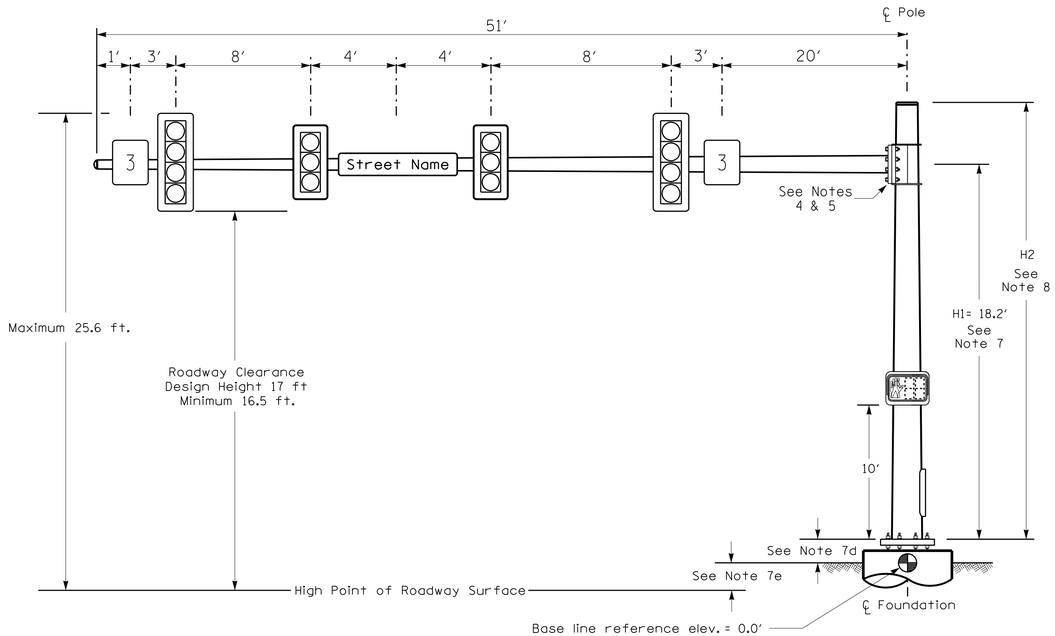

Elevation View

SPECIAL NOTE

The contractor is responsible for verifying that the mast arm attachment height (H1) will provide the "Design Height" clearance from the roadway before submitting final shop drawings for approval. Verify elevation data below which was obtained by field measurement or from available project survey data.

Elevation Data for Mast Arm Attachment (H1)

Elevation Differences for:	Pole 10	Pole 11
Baseline reference point at ⊕ Foundation @ ground level	0.0 ft.	0.0 ft.
Elevation difference at High point of roadway surface	0.4 ft.	-0.8 ft.
Elevation difference at Edge of travelway or face of curb	-0.7 ft.	-0.9 ft.

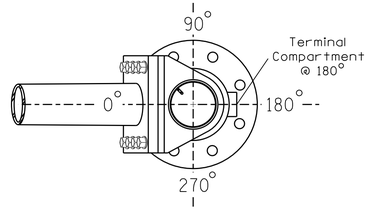

POLE RADIAL ORIENTATION

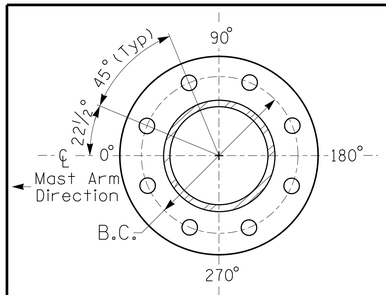

8 BOLT BASE PLATE DETAIL

See Note 6

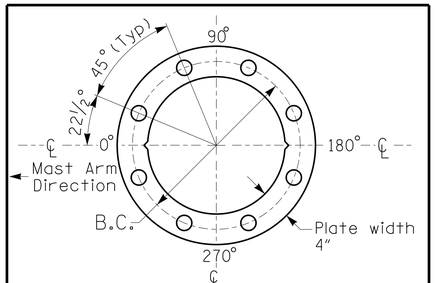

BASE PLATE TEMPLATE & ANCHOR BOLT LOCK PLATE DETAIL

For 8 Bolt Base Plate

METAL POLE No. 10 and 11

PROJECT REFERENCE NO.	SHEET NO.
U-5302	Sig. 20.4

MAST ARM LOADING SCHEDULE

LOADING SYMBOL	DESCRIPTION	AREA	SIZE	WEIGHT
	RIGID MOUNTED SIGNAL HEAD 12″-4 SECTION-WITH BACKPLATE	11.5 S.F.	25.5″W X 66.0″L	74 LBS
	RIGID MOUNTED SIGNAL HEAD 12″-3 SECTION-WITH BACKPLATE	9.3 S.F.	25.5″W X 52.5″L	60 LBS
	PEDESTRIAN SIGNAL HEAD WITH MOUNTING HARDWARE	2.2 S.F.	18.5″W X 17.0″L	21 LBS
Street Name	STREET NAME SIGN RIGID MOUNTED	16.0 S.F.	24.0″W X 96.0″L	36 LBS
3	SIGN RIGID MOUNTED	9.0 S.F.	36.0″W X 36.0″L	17 LBS

NOTES

DESIGN REFERENCE MATERIAL

1. Design the traffic signal structure and foundation in accordance with:
   - The 1st Edition 2015 AASHTO LRFD "Standard Specifications for Structural Supports for Highway Signs, Luminaires, and Traffic Signals, including all of the latest interim revisions.
   - The 2024 NCDOT "Standard Specifications for Roads and Structures." The latest addenda to the specifications can be found in the traffic signal project special provisions.
   - The 2024 NCDOT Roadway Standard Drawings.
   - The traffic signal project plans and special provisions.
   - The NCDOT "Metal Pole Standards" located at the following NCDOT website: https://connect.ncdot.gov/resources/safety/Pages/ITS-Design-Resources.aspx

DESIGN REQUIREMENTS

2. Design the traffic signal structure using the loading conditions shown in the elevation views. These are anticipated worst case "design loads" and may not represent the actual loads that will be applied at the time of the installation. The contractor should refer to the traffic signal plans for the actual loads that will be applied at the time of the installation.
3. Design all signal supports using force ratios that do not exceed 0.9.
4. The camber design for the mast arm deflection should provide an appearance of a low pitched arch where the tip or the free end of the mast arm does not deflect below horizontal when fully loaded.
5. A clamp-type bolted mast arm-to-pole connection may be used instead of the welded ring stiffened box connection shown as long as the connection meets all of the design requirements. This requires staggering the connections. Use elevation data for each arm to determine appropriate arm connection points.
6. Design base plate with 8 anchor bolt holes. Provide 2 inch x 60 inch anchor bolts.
7. The mast arm attachment height (H1) shown is based on the following design assumptions:
   a. Mast arm slope and deflection are not considered in determining the arm attachment height as they are assumed to offset each other.
   b. Signal heads are rigidly mounted and vertically centered on the mast arm.
   c. The roadway clearance height for design is as shown in the elevation views.
   d. The top of the pole base plate is 0.75 feet above the ground elevation.
   e. Refer to the Elevation Data Chart for the elevation differences between the proposed foundation ground level and the high point of the roadway.
8. The pole manufacturer will determine the total height (H2) of each pole using the greater of the following:
   - Mast arm attachment height (H1) plus 2 feet, or
   - H1 plus 1/2 of the total height of the mast arm attachment assembly plus 1 foot.
9. If pole location adjustments are required, the contractor must gain approval from the Engineer as this may affect the mast arm lengths and arm attachment heights. The contractor may contact the Signal Design Section Senior Structural Engineer for assistance at (919) 814-5000.
10. The contractor is responsible for verifying that the mast arm length shown will allow proper positioning of the signal heads over the roadway.
11. The contractor is responsible for providing soil penetration testing data (SPT) to the pole manufacturer so site specific foundations can be designed.

NCDOT Wind Zone 4 (120 mph)

DOCUMENT NOT CONSIDERED FINAL UNLESS ALL SIGNATURES COMPLETED

Prepared in the Offices of:
Transportation Mobility and Safety Division
Signal Design Section
750 N.Greenfield Pkwy.Garner,NC 27529

US 401 (Fayetteville Road) at Annaron Court

Division 5 Wake County Raleigh

PLAN DATE: February 2025 REVIEWED BY:

PREPARED BY: J.A. Lohr REVIEWED BY:

SCALE 0 N/A N/A

REVISIONS	INIT.	DATE

SEAL
NORTH CAROLINA PROFESSIONAL SEAL 026486 ENGINEER ROBERT J. ZIEMBA

DocuSigned by: Robert J. Ziemba 03/27/2025 DATE

SIG. INVENTORY NO. 05-1714

27-MAR-2025 14:55
\\NDOT\Projects\Traffic\Projects-TEC\ITS&SL\ITS Signals\Signal Design Section\Central Region\Div 5\U-5302\2025 Updates\051714_sig_mp_2025mmdd.dgn
JALohr

Design Loading for METAL POLE NO. 12

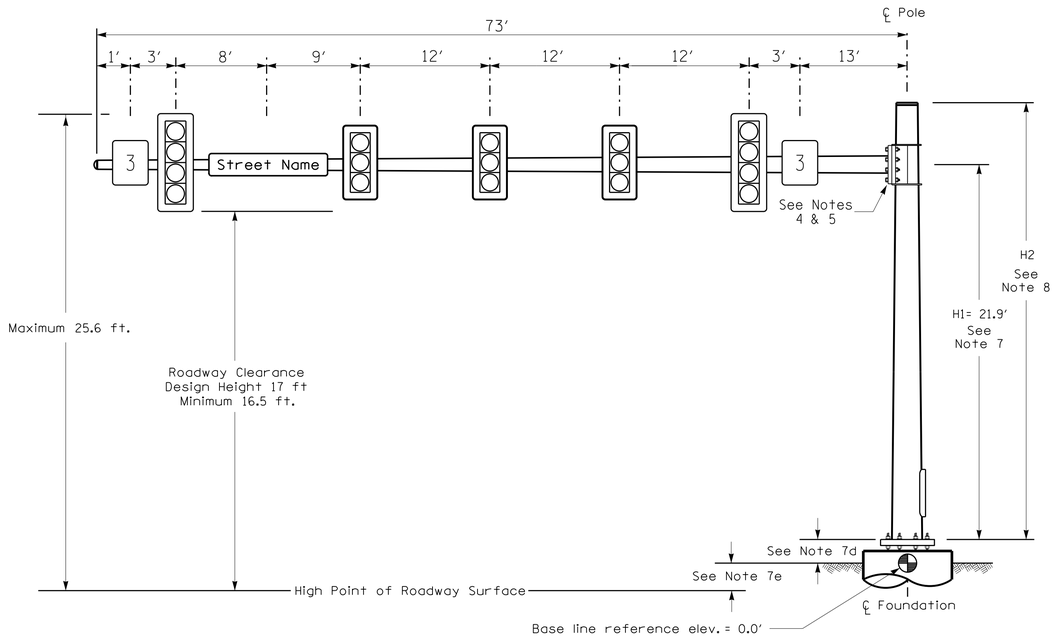

Elevation View

Design Loading for METAL POLE NO. 13

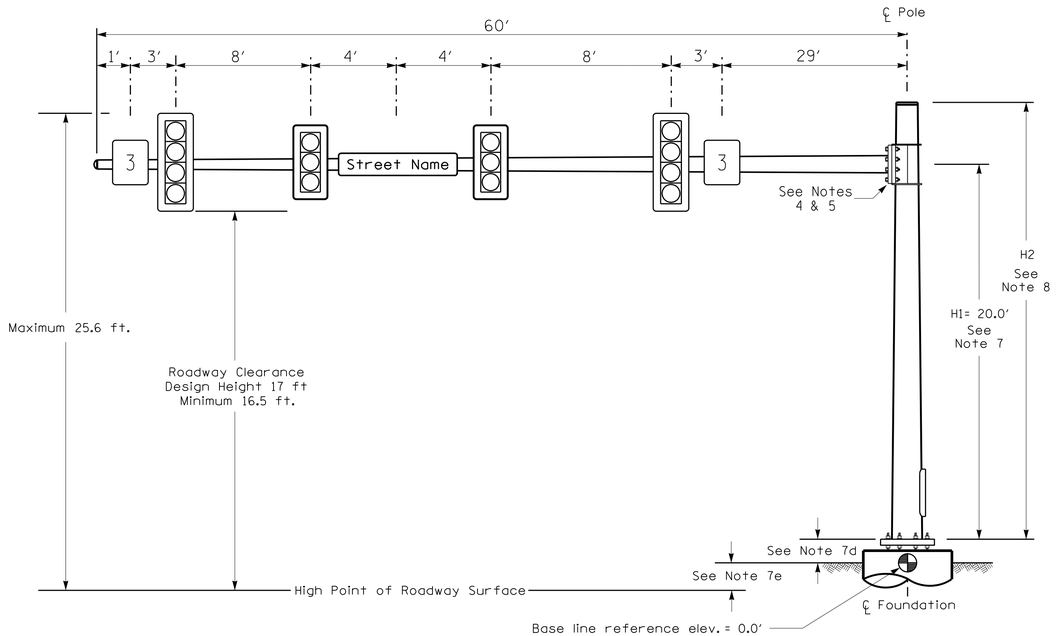

Elevation View

SPECIAL NOTE

The contractor is responsible for verifying that the mast arm attachment height (H1) will provide the "Design Height" clearance from the roadway before submitting final shop drawings for approval. Verify elevation data below which was obtained by field measurement or from available project survey data.

Elevation Data for Mast Arm Attachment (H1)

Elevation Differences for:	Pole 12	Pole 13
Baseline reference point at ⊕ Foundation @ ground level	0.0 ft.	0.0 ft.
Elevation difference at High point of roadway surface	2.9 ft.	0.9 ft.
Elevation difference at Edge of travelway or face of curb	1.8 ft.	-0.3 ft.

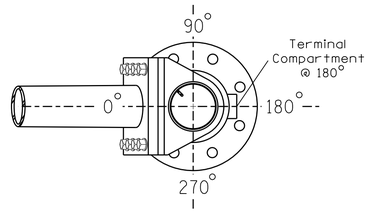

POLE RADIAL ORIENTATION

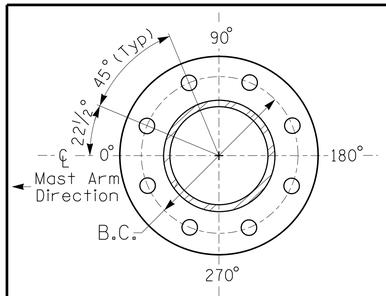

8 BOLT BASE PLATE DETAIL

See Note 6

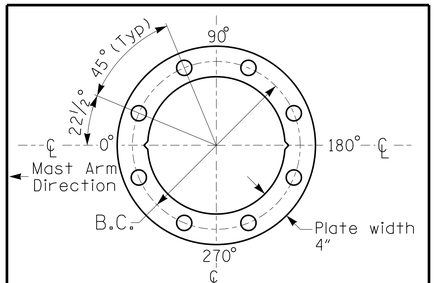

BASE PLATE TEMPLATE & ANCHOR BOLT LOCK PLATE DETAIL

For 8 Bolt Base Plate

MAST ARM LOADING SCHEDULE

LOADING SYMBOL	DESCRIPTION	AREA	SIZE	WEIGHT
	RIGID MOUNTED SIGNAL HEAD 12″-4 SECTION-WITH BACKPLATE	11.5 S.F.	25.5″W X 66.0″L	74 LBS
	RIGID MOUNTED SIGNAL HEAD 12″-3 SECTION-WITH BACKPLATE	9.3 S.F.	25.5″W X 52.5″L	60 LBS
Street Name	STREET NAME SIGN RIGID MOUNTED	16.0 S.F.	24.0″W X 96.0″L	36 LBS
3	SIGN RIGID MOUNTED	9.0 S.F.	36.0″W X 36.0″L	17 LBS

NOTES

DESIGN REFERENCE MATERIAL

1. Design the traffic signal structure and foundation in accordance with:
   - The 1st Edition 2015 AASHTO LRFD "Standard Specifications for Structural Supports for Highway Signs, Luminaires, and Traffic Signals, including all of the latest interim revisions.
   - The 2024 NCDOT "Standard Specifications for Roads and Structures." The latest addenda to the specifications can be found in the traffic signal project special provisions.
   - The 2024 NCDOT Roadway Standard Drawings.
   - The traffic signal project plans and special provisions.
   - The NCDOT "Metal Pole Standards" located at the following NCDOT website: https://connect.ncdot.gov/resources/safety/Pages/ITS-Design-Resources.aspx

DESIGN REQUIREMENTS

2. Design the traffic signal structure using the loading conditions shown in the elevation views. These are anticipated worst case "design loads" and may not represent the actual loads that will be applied at the time of the installation. The contractor should refer to the traffic signal plans for the actual loads that will be applied at the time of the installation.
3. Design all signal supports using force ratios that do not exceed 0.9.
4. The camber design for the mast arm deflection should provide an appearance of a low pitched arch where the tip or the free end of the mast arm does not deflect below horizontal when fully loaded.
5. A clamp-type bolted mast arm-to-pole connection may be used instead of the welded ring stiffened box connection shown as long as the connection meets all of the design requirements. This requires staggering the connections. Use elevation data for each arm to determine appropriate arm connection points.
6. Design base plate with 8 anchor bolt holes. Provide 2 inch x 60 inch anchor bolts.
7. The mast arm attachment height (H1) shown is based on the following design assumptions:
   a. Mast arm slope and deflection are not considered in determining the arm attachment height as they are assumed to offset each other.
   b. Signal heads are rigidly mounted and vertically centered on the mast arm.
   c. The roadway clearance height for design is as shown in the elevation views.
   d. The top of the pole base plate is 0.75 feet above the ground elevation.
   e. Refer to the Elevation Data Chart for the elevation differences between the proposed foundation ground level and the high point of the roadway.
8. The pole manufacturer will determine the total height (H2) of each pole using the greater of the following:
   - Mast arm attachment height (H1) plus 2 feet, or
   - H1 plus 1/2 of the total height of the mast arm attachment assembly plus 1 foot.
9. If pole location adjustments are required, the contractor must gain approval from the Engineer as this may affect the mast arm lengths and arm attachment heights. The contractor may contact the Signal Design Section Senior Structural Engineer for assistance at (919) 814-5000.
10. The contractor is responsible for verifying that the mast arm length shown will allow proper positioning of the signal heads over the roadway.
11. The contractor is responsible for providing soil penetration testing data (SPT) to the pole manufacturer so site specific foundations can be designed.

NCDOT Wind Zone 4 (120 mph)

DOCUMENT NOT CONSIDERED FINAL UNLESS ALL SIGNATURES COMPLETED

Prepared in the Offices of:
Transportation Mobility and Safety Division
Signal Design Section
750 N.Greenfield Pkwy.Garner,NC 27529

US 401 (Fayetteville Road)
at
Annaron Court

Division 5 Wake County Raleigh

PLAN DATE: February 2025 REVIEWED BY:
PREPARED BY: J.A. Lohr REVIEWED BY:

SCALE 0 N/A N/A

REVISIONS	INIT.	DATE

SEAL
NORTH CAROLINA PROFESSIONAL SEAL 026486 ENGINEER ROBERT J. ZIEMBA

DocuSigned by: 03/27/2025
SIGNATURE DATE

SIG. INVENTORY NO. 05-1714

27-MAR-2025 14:57
\\NCDOT\Resources01\Groups-TEC\ITS&SL\ITS Signals\Signal Design Section\Central Region\Div 5\U-5302\2025 Updates\051714_sig_mp_2025mmdd.dgn
JALohr

PROJECT REFERENCE NO.	SHEET NO.
U-5302	Sig. 21.0

DEFAULT PHASING DIAGRAM

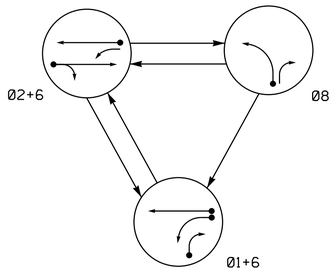

ALTERNATE PHASING DIAGRAM

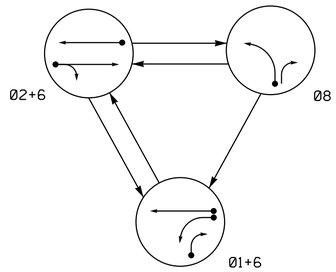

PHASING DIAGRAM DETECTION LEGEND

- DETECTED MOVEMENT
- UNDETECTED MOVEMENT (OVERLAP)
- UNSIGNALIZED MOVEMENT
- PEDESTRIAN MOVEMENT

SE-PAC 2070 LOOP & DETECTOR UNIT INSTALLATION CHART

INDUCTIVE LOOPS						DETECTOR PROGRAMMING																	
							TIMING		OPERATION MODE												STATUS	
LOOP NO.	SIZE (ft)	TURNS	DIST. FROM STOPBAR (ft)	NEW	EXISTING	ASSIGNED PHASE	DELAY	EXTEND (STRETCH)	0 VEHICLE	1 PEDESTRIAN	2 I CALL	3 STOP A	4 STOP B	5 PROTPER PROTPER THROUGH	6 PROTPER PROTPER THROUGH	7 AND	SWITCH	SYSTEM LOOPS	NEW	EXISTING
1A	6X40	2-4-2	0	X	-	1	5 SEC.	- SEC.	X	-	-	-	-	-	-	-	-	-	X	-
1B	6X40	2-4-2	0	X	-	1	15 SEC.	- SEC.	X	-	-	-	-	-	-	-	-	-	X	-
2A	6X6	4	200	X	-	2	- SEC.	- SEC.	X	-	-	-	-	-	-	-	-	-	X	-
6A	6X6	4	200	X	-	6	- SEC.	- SEC.	X	-	-	-	-	-	-	-	-	-	X	-
8A	6X40	2-4-2	0	X	-	8	3 SEC.	- SEC.	X	-	-	-	-	-	-	-	-	-	X	-

DEFAULT PHASING TABLE OF OPERATION

SIGNAL FACE	PHASE 01+06	PHASE 02+06	PHASE 08	FLASH
11	←	F Y	~~R~~	~~R~~
21, 22	R	G	R	R
61, 62	G	G	R	R
81, 83	~~R~~	~~R~~	←	~~R~~
82	→	R	→	R

ALTERNATE PHASING TABLE OF OPERATION

SIGNAL FACE	PHASE 01+06	PHASE 02+06	PHASE 08	FLASH
11	←	F Y	~~R~~	~~R~~
21, 22	R	G	R	R
61, 62	G	G	R	R
81, 83	~~R~~	~~R~~	←	~~R~~
82	→	R	→	R

3 Phase
Fully Actuated
(Raleigh Signal System)

NOTES

1. Refer to "Roadway Standard Drawings NCDOT" dated January 2024 and "Standard Specifications for Roads and Structures" dated January 2024.
2. Do not program signal for late night flashing operation unless otherwise directed by the Engineer.
3. Phase 1 may be lagged.
4. Set all detector units to presence mode.
5. Locate new cabinet so as not to obstruct sight distance of vehicles turning right on red.
6. The Division (City) Traffic Engineer will determine the hours of use for each phasing plan.
7. Maximum times shown in timing chart are for free-run operation only. Coordinated signal system timing values supersede these values.
8. Program phase 4 as a dummy phase for Ring 1.

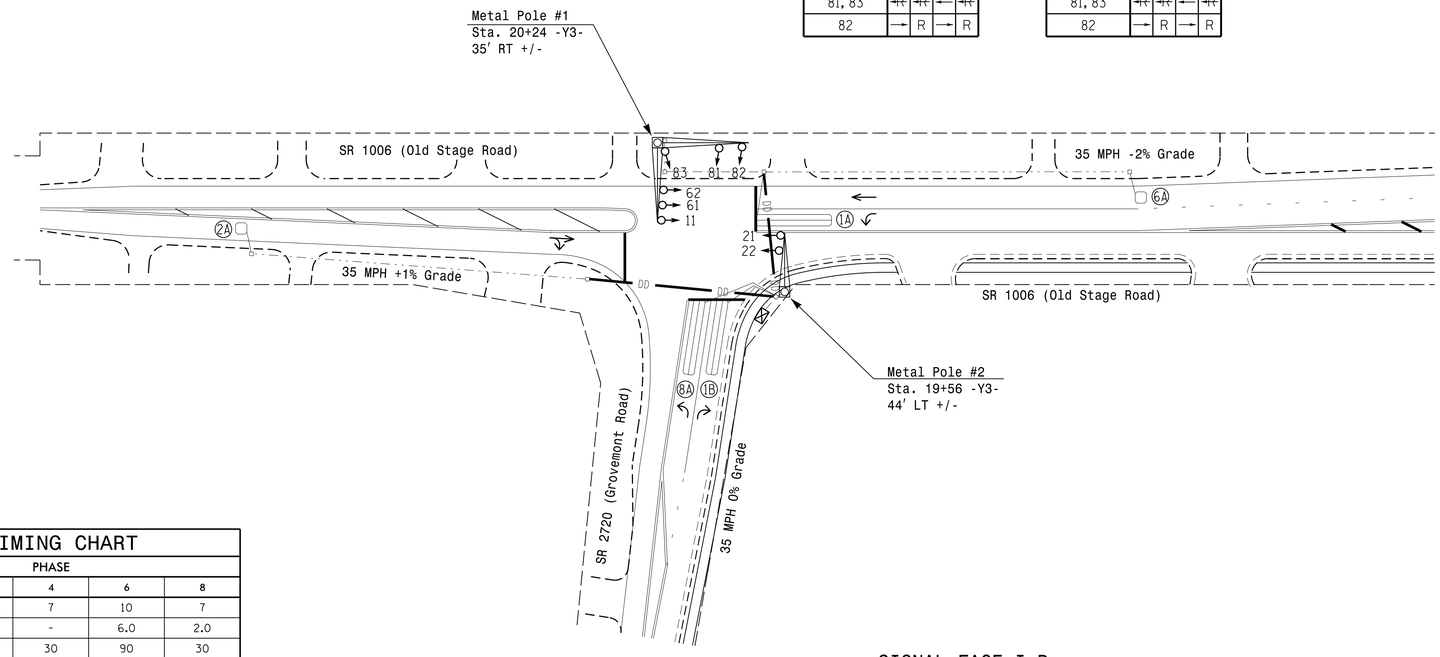

SE-PAC 2070 TIMING CHART

FEATURE	PHASE 1	PHASE 2	PHASE 4	PHASE 6	PHASE 8
Min Green *	7	10	7	10	7
Passage Gap *	2.0	6.0	-	6.0	2.0
Maximum Green *	30	90	30	90	30
Yellow Change	3.0	4.0	3.0	4.0	3.0
Red Clear	1.4	1.3	1.9	1.3	1.9
Walk *	-	-	-	-	-
Pedestrian Clear	-	-	-	-	-
Added Initial *	-	2.5	-	2.5	-
Maximum Initial *	-	24	-	24	-
Time Before Reduction *	-	15	-	15	-
Time To Reduce *	-	30	-	30	-
Minimum Gap	-	3.0	-	3.0	-
Recall Mode	-	MIN RECALL	-	MIN RECALL	-
Vehicle Call Memory	NON-LOCK	LOCK	-	LOCK	NON-LOCK
Dual Entry	-	-	-	-	-
Simultaneous Gap	ON	ON	ON	ON	ON

* These values may be field adjusted. Do not adjust Min Green and Extension times for phases 2 and 6 lower than what is shown. Min Green for all other phases should not be lower than 4 seconds.

SIGNAL FACE I.D.

All Heads L.E.D.

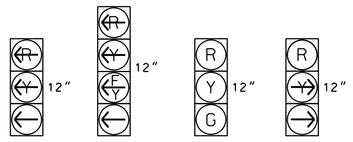

LEGEND

PROPOSED		EXISTING
	Traffic Signal Head	
	Modified Signal Head	N/A
	Sign	
	Pedestrian Signal Head	
	Signal Pole with Guy	
	Signal Pole with Sidewalk Guy	
	Inductive Loop Detector	
	Controller & Cabinet	
	Junction Box	
	2-in Underground Conduit	
N/A	Right of Way	
	Directional Arrow	
	Metal Pole with Mastarm	
DD	Directional Drill	N/A

New Installation

Prepared for the Offices of:
Transportation Mobility and Safety Division
Traffic Engineering Branch
Signal Design Section
750 N.Greenfield Pkwy.Garner,NC 27529

SR 1006 (Old Stage Road)
at
SR 2720 (Grovemont Road)

Division 5 Wake County Raleigh

PLAN DATE: November 2024 REVIEWED BY:
PREPARED BY: I.O. Umozurike REVIEWED BY:

REVISIONS	INIT.	DATE

SCALE 0 40 1"=40'

DOCUMENT NOT CONSIDERED FINAL UNLESS ALL SIGNATURES COMPLETED

SEAL
NORTH CAROLINA PROFESSIONAL SEAL 026486 ENGINEER ROBERT J. ZIEMBA

DocuSigned by: Robert J. Ziemba 03/25/2025
DATE

SIG. INVENTORY NO. 05-0602

22-MAY-2025 14:46
K:\TIMS\SGNLMTS\Signals\Signal Design Section\Central Region\Div 5\U-5302\05-0602 Rev\05602_sig_dsn_20250325.dgn
JALCOCK

PROJECT REFERENCE NO.	SHEET NO.
U-5302	Sig. 21.1

18 CHANNEL CONFLICT MONITOR PROGRAMMING DETAIL

(remove jumpers and set switches as shown)

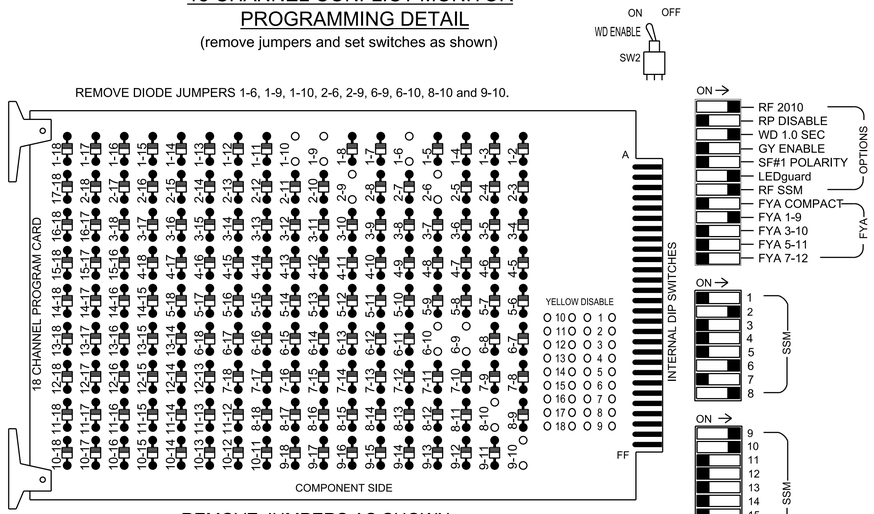

REMOVE JUMPERS AS SHOWN

NOTES:

1. Card is provided with all diode jumpers in place. Removal of any jumper allows its channels to run concurrently.
2. Ensure jumpers SEL2-SEL5 and SEL9 are present on the monitor board.
3. Ensure that the Red Enable is active at all times during normal operation.
4. Connect serial cable from conflict monitor to comm. port 1 of 2070 controller. Ensure conflict monitor communicates with 2070.

NOTES

1. To prevent "flash-conflict" problems, insert red flash program blocks for all vehicle load switches in the output file. The installer shall verify that signal heads flash in accordance with the Signal Plans.
2. Program controller to start up in phases 2 and 6 Green/Don't Walk.
3. Enable simultaneous gap-out feature for all phases.
4. Program phases 2 and 6 for volume density operation.
5. The cabinet and controller are part of the Raleigh City Signal System.

EQUIPMENT INFORMATION

Controller.....2070LX
Cabinet.....332 w/ Aux
Software.....SE-PAC2070 ver 5
Cabinet Mount.....Base
Output File Positions.....18 With Aux. Output File
Load Switches Used.....S1, S2, S8, S11, AUX S1, AUX S2
Phases Used.....1, 2, **4, 6, 8
Overlap "A".....*
Overlap "B".....*
Overlap "C".....Not Used
Overlap "D".....Not Used

*See overlap programming detail on sheet 2
**Phase used as dummy phase

SIGNAL HEAD HOOK-UP CHART

LOAD SWITCH NO.	S1	S2	S3	S4	S5	S6	S7	S8	S9	S10	S11	S12	AUX S1	AUX S2	AUX S3	AUX S4	AUX S5	AUX S6
CMU CHANNEL NO.	1	2	13	3	4	14	5	6	15	7	8	16	9	10	17	11	12	18
PHASE	1	2	2 PED	3	4	4 PED	5	6	6 PED	7	8	8 PED	OLA	OLB	SPARE	OLC	OLD	SPARE
SIGNAL HEAD NO.	11★	21,22	NU	NU	NC	NU	NU	61,62	NU	NU	81,83	NU	11★	82	NU	NU	NU	NU
RED		128						134						A124				
YELLOW	*	129						135										
GREEN		130						136										
RED ARROW											107		A121					
YELLOW ARROW											108		A122	A125				
FLASHING YELLOW ARROW													A123					
GREEN ARROW	127										109			A126				
✋																		
🚶																		

NU = Not Used
NC = No Connection
*Denotes install load resistor. See load resistor installation detail this sheet.
★See pictorial of head wiring in detail this sheet.

INPUT FILE POSITION LAYOUT

(front view)

		1	2	3	4	5	6	7	8	9	10	11	12	13	14
FILE "I"	U	ø1 1A	ø2 2A	SLOT EMPTY	SLOT EMPTY	SLOT EMPTY	SLOT EMPTY	SLOT EMPTY	SLOT EMPTY	SLOT EMPTY	SLOT EMPTY	SLOT EMPTY	SLOT EMPTY	SLOT EMPTY	FS DC ISOLATOR
	L	NOT USED	NOT USED												ST DC ISOLATOR
FILE "J"	U	SLOT EMPTY	ø6 6A	SLOT EMPTY	SLOT EMPTY	SLOT EMPTY	ø8 8A	SLOT EMPTY	SLOT EMPTY	SLOT EMPTY	SLOT EMPTY	SLOT EMPTY	SLOT EMPTY	SLOT EMPTY	SLOT EMPTY
	L		NOT USED				ø1 1B								

EX.: 1A, 2A, ETC. = LOOP NO.'S

FS = FLASH SENSE
ST = STOP TIME

INPUT FILE CONNECTION & PROGRAMMING CHART

LOOP NO.	LOOP TERMINAL	INPUT FILE POS.	PIN NO.	DETECTOR NO.	NEMA PHASE	DELAY TIME	EXTEND (STRETCH) TIME
1A	TB2-1,2	I1U	56	1	1	5	
1B	TB5-11,12	J6L	46	32	1	15	
2A	TB2-5,6	I2U	39	3	2		
6A	TB3-5,6	J2U	40	21	6		
8A	TB5-9,10	J6U	42	31	8	3	

INPUT FILE POSITION LEGEND: J2L
FILE J
SLOT 2
LOWER

FYA SIGNAL WIRING DETAIL

(wire signal head as shown)

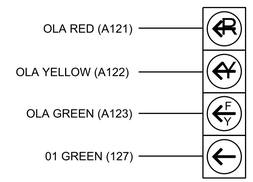

LOAD RESISTOR INSTALLATION DETAIL

(install resistor as shown)

ACCEPTABLE VALUES	
Value (ohms)	Wattage
1.5K - 1.9K	25W (min)
2.0K - 3.0K	10W (min)

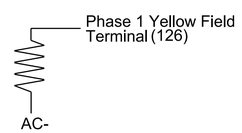

THIS ELECTRICAL DETAIL IS FOR
THE SIGNAL DESIGN: 05-0602
DESIGNED: November 2024
SEALED: 3/25/2025
REVISED: N/A

Electrical Detail - Sheet 1 of 3

DOCUMENT NOT CONSIDERED FINAL UNLESS ALL SIGNATURES COMPLETED

ELECTRICAL AND PROGRAMMING DETAILS FOR:

SR 1006 (Old Stage Road)
at
SR 2720 (Grovemont Road)

Division 5 | Wake County | Raleigh

PLAN DATE: March 2025 | REVIEWED BY:
PREPARED BY: Zarrar Zafar | REVIEWED BY:

REVISIONS	INIT.	DATE

Prepared in the Offices of:
Traffic Engineering Branch, Mobility and Safety Division
NORTH CAROLINA DEPARTMENT OF TRANSPORTATION
Traffic Signal Management Section
750 N.Greenfield Pkwy.Garner,NC 27529

SEAL
NORTH CAROLINA PROFESSIONAL SEAL 031001 ENGINEER D. TODD JOYCE

DocuSigned by: D. Todd Joyce 03/26/2025
A90CADFE8D624A1D... DATE

SIG. INVENTORY NO. 05-0602

26-MAR-2025 14:50
S:\TSSG\ATS Signals\Workgroups\Sig Mon\Zafar\Plans\Division 5\05060224050602_sm_ele_2025mmdd.dgn
zzafar

PROJECT REFERENCE NO.	SHEET NO.
U-5302	Sig. 21.2

OVERLAP PROGRAMMING DETAIL

1. From Main Menu select [4 - UNIT DATA]
2. From UNIT DATA Submenu select [3 - OVERLAP DATA]

Use Up/Dn/Left/Right keys to position cursor on the desired Overlap. Use the NEXT key to select the overlap type. Press the ENT key and then program as per the Overlap screen(s) shown.

```
OVERLAP DATA

   A: FYA   E: ---   I: ---   M: ---
   B: STD   F: ---   J: ---   N: ---
   C: ---   G: ---   K: ---   O: ---
   D: ---   H: ---   L: ---   P: ---

 PREV/NEXT TO CYCLE
```

OVERLAP A

Use Up/Dn/Left/Right keys to position cursor on Overlap 'A', use the NEXT key to select 'FYA', then press ENT

```
  FYA OVERLAP - A              MIN PERM: 1
       PHASES..12345678 90123456
  PROT PHASES: 10000000 00000000  DELAY/10
  PERM PHASES: 01000000 00000000   FYA:  0
  -PED PHASES: 00000000 00000000  -PED: 30
     OVERLAPS..ABCDEFGH IJKLMNOP
  PROT O-LAPS: x0000000 00000000
  PERM O-LAPS: x0000000 00000000
```

← NOTICE DELAY/10 = 0

Press ESC

OVERLAP B

Use Up/Dn/Left/Right keys to position cursor on Overlap 'B', use the NEXT key to select 'FYA', then press ENT

```
OVERLAP - B       12345678 90123456
          PARENTS: 10000001 00000000
      +GRN PHASES: 00000000 00000000
      -G/Y PHASES: 00000000 00000000
      -PED PHASES: 00000000 00000000
 TRAIL GREEN STANDARD:   0  YEL/10:  40
 TRAIL GREEN  PREEMPT:   0  RED/10:  20
```

END OVERLAP PROGRAMMING

INIT & N.A. RESP PROGRAMMING DETAIL

(program controller as shown below)

From Main Menu, press '3' (Phase Data)

```
PHASE MENU

 1-VEHICLE DATA          6-SPEC. SEQUENCE+
 2-DENSITY TIMES+        7-DETECTOR DATA
 3-PEDESTRIAN DATA       8-PHASE & BANK COPY
 4-INIT & N.A. RESP+     9-SELECT PHASE BANK
 5-N.LOCK & MISC+

  '+' DENOTES BANKABLE DATA
```

PHASE	1	2	3	4	5	6	7	8
INITIAL	1	4	0	1	0	4	0	1
NA RESP	0	1	0	2	0	1	0	2
UPDT GRN	0	0	0	0	0	0	0	0

CODES	0	1	2	3	4	5	6
INIL	NONE	INACT	RED	YEL	GRN	DRK	G/DW
NA RSP	NONE	NA1	NA2	1&2	---	---	---

INIT & N.A. RESP PROGRAMMING COMPLETE

REMOTE FLASH PROGRAMMING DETAIL

(program controller as shown below)

1. From Main Menu select [4 - UNIT DATA]
2. From UNIT DATA Submenu select [2 - REMOTE FLASH]
3. From FLASH Submenu select [1 - FLASH SETTINGS]

```
FLASH SETTINGS          TEST-A AS FLASH: 0

LDSW:   123456789 0123456789 0123456789 012
FLSH:   110010010 0101100000 0000000000 000
 ALT:   010010000 0000000000 0000000000 000

0-DARK  1-RED  2-YELLOW  3-STEADY YELLOW
```

PRESS 'F' TO RETURN TO FLASH

4. From REMOTE FLASH Submenu select [2 - ENTRY/EXIT PHASES]

```
FLASH ENTRY/EXIT PHASES

      PHASES:  12345678 90123456
       ENTRY:  01000100 00000000
        EXIT:  01000100 00000000
```

REMOTE FLASH PROGRAMMING COMPLETE

ALL RED FLASH STARTUP PROGRAMMING DETAIL

(program controller as shown below)

FROM MAIN MENU PRESS 4 (UNIT DATA)

```
UNIT DATA                PRESS # DESIRED

 1- STARTUP & MISC        6 -  ALT SEQUENCES
 2- REMOTE FLASH          7- PORT 1 DATA
 3- OVERLAP STANDARD      8- I/O MISC
 4- OVERLAP SPECIAL       9- SIG DRV OUT
 5- RING STRUCTURE

                                F- PRIOR MENU
```

```
STARTUP  &  MISC
STARTUP  TIME . :  6 (SEC) STATE:  2  (0-FL
 RED   REV/10 . . . : 40 (TSEC)              1-RED)
AUTO  PED CLR . :  0 (0-NO  1-YES)           2-RAF)
 STOP  T RESET . :  0 (0-NO  1-YES)
SEQUENCE . . . . . :  1 (1-19)
 SPECIAL SEQ      :  0 (SEE HELP)
A-UP B-DN C-LT D-RT E-ENTER F-PRIOR MENU
```

STARTUP PROGRAMMING COMPLETE

THIS ELECTRICAL DETAIL IS FOR
THE SIGNAL DESIGN: 05-0602
DESIGNED: November 2024
SEALED: 3/25/2025
REVISED: N/A

Electrical Detail - Sheet 2 of 3

DOCUMENT NOT CONSIDERED FINAL UNLESS ALL SIGNATURES COMPLETED

ELECTRICAL AND PROGRAMMING DETAILS FOR:

SR 1006 (Old Stage Road)
at
SR 2720 (Grovemont Road)

Division 5 | Wake County | Raleigh

PLAN DATE: March 2025 | REVIEWED BY:

PREPARED BY: Zarrar Zafar | REVIEWED BY:

REVISIONS	INIT.	DATE

Prepared in the Offices of:
NC Department of Transportation Mobility and Safety Division Traffic Engineering Branch Traffic Signals Management Section
750 N.Greenfield Pkwy.Garner,NC 27529

SEAL
NORTH CAROLINA PROFESSIONAL SEAL 031001 ENGINEER D. TODD JOYCE

DocuSigned by: D. Todd Joyce 03/26/2025
A90CAEFED9D24A0... DATE

SIG. INVENTORY NO. 05-0602

26-MAR-2025 13:05
$wmodel
$USER
z2zfar
C:\SIGNALS\Workgroups\Sig Mgmt\Zafar\Projects\Division 5\U5302\PO5602\PO5602_sm_ele_2025mod1.dgn

PROJECT REFERENCE NO.	SHEET NO.
U-5302	Sig. 21.3

PROGRAMMING DETAILS TO CALL ALTERNATE PHASING

To run the Alternate phasing, schedule a Day Plan that calls an Action that is programmed to enable Phase Function 1.

Actions can be programmed to run free run or call a coordination pattern.

PHASE FUNCTION MAPPING PROGRAMMING DETAIL

Step 1 - Assign OMIT OVERLAP A to Phase Function 1.

1. From Main Menu select 6 - TIME BASE DATA
2. From TIME BASE DATA Submenu select 9 - PHS FUNC MAPPING

Use Up/Dn Keys to position cursor on NUM 1

```
TIME BASE PHS FUNC MAPING
                PHS FUNC SEL(0-OFF/1-ON)
NUM..P-FUNCT NAME.....123456789 0123456
  1  PHS-01 MAX # 2   000000000 0000000
  2  PHS-02 MAX # 2   000000000 0000000
  3  PHS-03 MAX # 2   000000000 0000000
  4  PHS-04 MAX # 2   000000000 0000000
UP/DOWN TO SCROLL               E-EDIT
```

BEFORE PROCEEDING, SCROLL THRU ENTIRE RANGE OF FUNCTIONS TO ENSURE ALL P-FUNCT 1 NUM x VALUES ARE SET TO '0' (OFF)

Use Up/Dn/Left/Right keys to position cursor on NUM 145 and program P-FUNCT 1 as shown.

```
TIME BASE PHS FUNC MAPING
                PHS FUNC SEL(0-OFF/1-ON)
NUM..P-FUNCT NAME.....123456789 0123456
145  OVERLAP A OMIT   100000000 0000000
146  OVERLAP B OMIT   000000000 0000000
147  OVERLAP C OMIT   000000000 0000000
148  OVERLAP D OMIT   000000000 0000000
UP/DOWN TO SCROLL               E-EDIT
```

← SET P-FUNCT 1 VALUE TO '1' (ON) AS SHOWN FOR OVERLAP A OMIT

PHASE FUNCTION PROGRAMMING COMPLETE

TIME BASE ACTIONS PROGRAMMING

Step 2 - Set up an Action to run Phase Function 1.

1. From Main Menu select 6 - TIME BASE DATA
2. From TIME BASE DATA Submenu select 5 - ACTIONS

```
TIME BASE ACTION # ***
                     12345678 90123456
  PATN:001      PHS: 10000000 00000000
   0=I'CONN     AUX: 000-----
  1-253=PATN    SPC: 0000000-      0=NO
  254=FREE      DIM: 0-------      1=YES
  255=FLASH     DET: 000-----
UP/DOWN TO SCROLL
```

← NOTICE PHS 1

SPECIAL FUNCTION PROGRAMMING COMPLETE

*** Action #(s) are to be determined by the Division and/or City Traffic Engineer and are scheduled to run in Day Plan(s).

THIS ELECTRICAL DETAIL IS FOR THE SIGNAL DESIGN: 05-0602
DESIGNED: November 2024
SEALED: 3/25/2025
REVISED: N/A

Electrical Detail - Sheet 3 of 3

DOCUMENT NOT CONSIDERED FINAL UNLESS ALL SIGNATURES COMPLETED

ELECTRICAL AND PROGRAMMING DETAILS FOR:

Prepared in the Offices of:

Transportation Mobility and Safety Division
STATE OF NORTH CAROLINA
DEPARTMENT OF TRANSPORTATION
Signals Management Section

750 N.Greenfield Pkwy,Garner,NC 27529

SR 1006 (Old Stage Road)
at
SR 2720 (Grovemont Road)

Division 5 Wake County Raleigh

PLAN DATE: March 2025	REVIEWED BY:
PREPARED BY: Zarrar Zafar	REVIEWED BY:

REVISIONS	INIT.	DATE

SEAL

NORTH CAROLINA PROFESSIONAL SEAL 031001 ENGINEER D. TODD JOYCE

DocuSigned by: D. Todd Joyce 03/26/2025
A90CADEDBD4241D DATE

SIG. INVENTORY NO. 05-0602

26-MAR-2025 13:07
S:*ITS&SU*ITS Signals*Workgroups*Sig Man*Zafar*Plans*Division 5*050602*050602_sm_ele_2025mmdd.dgn
zzafar

METAL POLE No. 14

PROJECT REFERENCE NO.	SHEET NO.
U-5302	Sig. 21.4

Design Loading for METAL POLE NO. 14, MAST ARM A

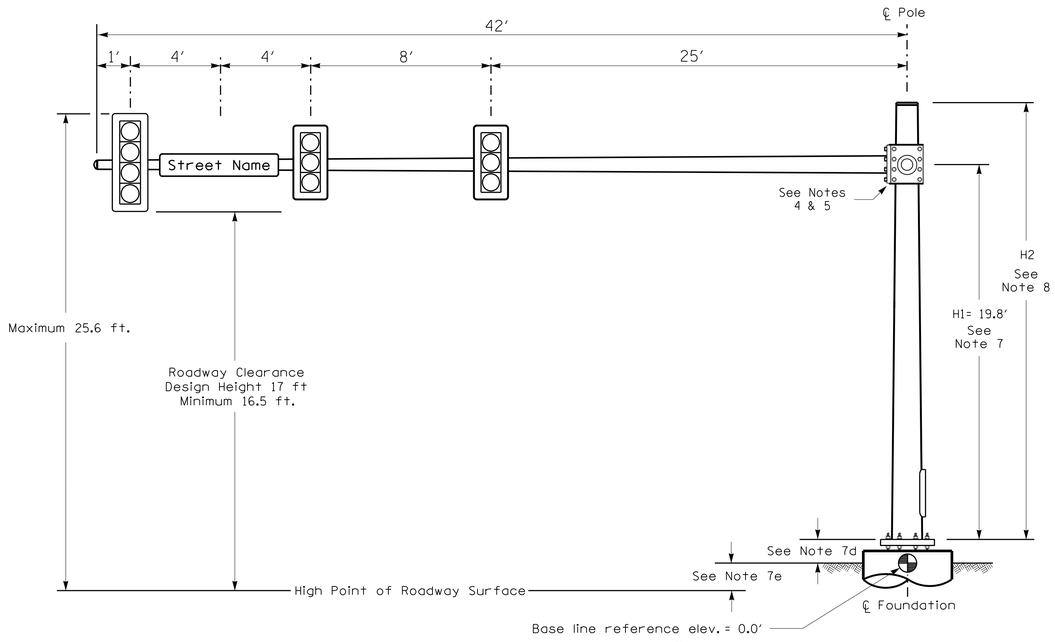

Elevation View @ 270°

Design Loading for METAL POLE NO. 14, MAST ARM B

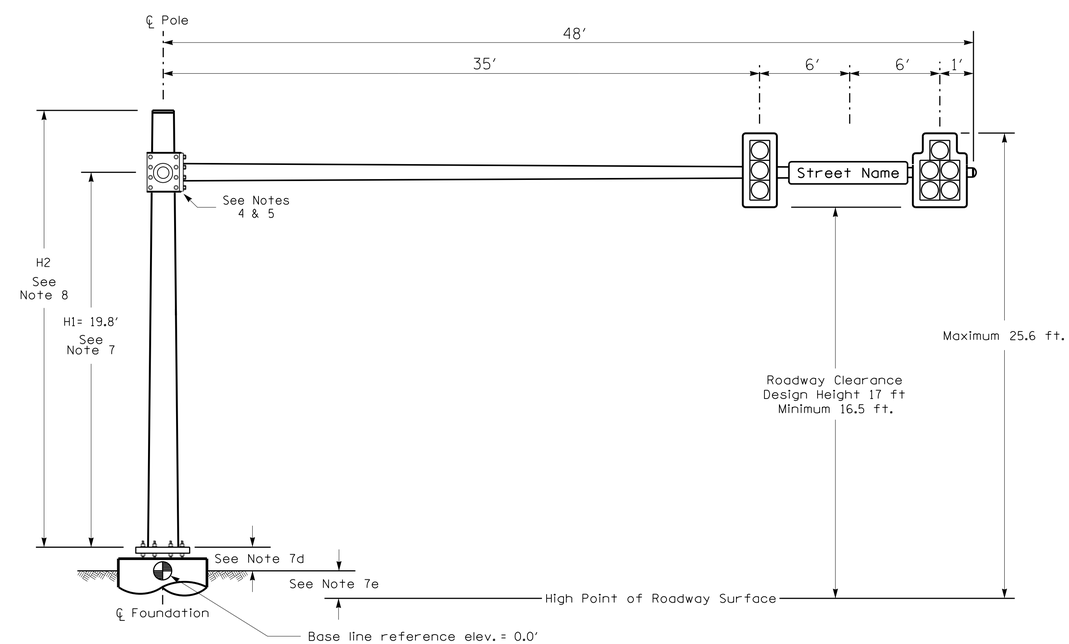

Elevation View @ 0°

SPECIAL NOTE

The contractor is responsible for verifying that the mast arm attachment height (H1) will provide the "Design Height" clearance from the roadway before submitting final shop drawings for approval. Verify elevation data below which was obtained by field measurement or from available project survey data.

Elevation Data for Mast Arm Attachment (H1)

Elevation Differences for:	Arm A	Arm B
Baseline reference point at ⊕ Foundation @ ground level	0.0 ft.	0.0 ft.
Elevation difference at High point of roadway surface	0.8 ft.	N/A
Elevation difference at Edge of travelway or face of curb	0.4 ft.	N/A

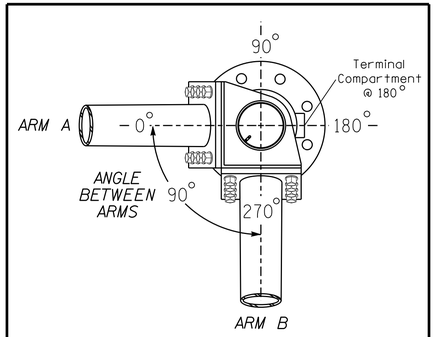

POLE RADIAL ORIENTATION

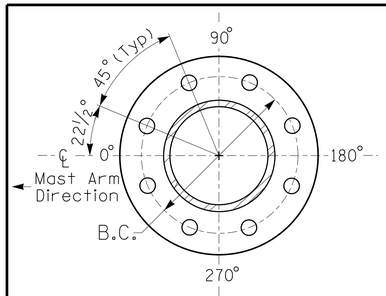

8 BOLT BASE PLATE DETAIL

See Note 6

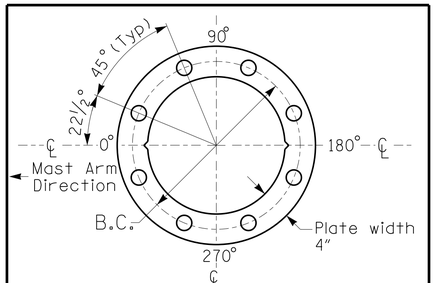

BASE PLATE TEMPLATE & ANCHOR BOLT LOCK PLATE DETAIL

For 8 Bolt Base Plate

MAST ARM LOADING SCHEDULE

LOADING SYMBOL	DESCRIPTION	AREA	SIZE	WEIGHT
	RIGID MOUNTED SIGNAL HEAD 12″-4 SECTION-WITH BACKPLATE	11.5 S.F.	25.5″ W X 66.0″L	74 LBS
	RIGID MOUNTED SIGNAL HEAD 12″-3 SECTION-WITH BACKPLATE	9.3 S.F.	25.5″ W X 52.5″L	60 LBS
	RIGID MOUNTED SIGNAL HEAD 12″-5 SECTION-WITH BACKPLATE	16.3 S.F.	42.0″ W X 56.0″L	103 LBS
Street Name	STREET NAME SIGN RIGID MOUNTED	16.0 S.F.	24.0″ W X 96.0″L	36 LBS

NOTES

DESIGN REFERENCE MATERIAL

1. Design the traffic signal structure and foundation in accordance with:
   - The 1st Edition 2015 AASHTO LRFD "Standard Specifications for Structural Supports for Highway Signs, Luminaires, and Traffic Signals, including all of the latest interim revisions.
   - The 2024 NCDOT "Standard Specifications for Roads and Structures." The latest addenda to the specifications can be found in the traffic signal project special provisions.
   - The 2024 NCDOT Roadway Standard Drawings.
   - The traffic signal project plans and special provisions.
   - The NCDOT "Metal Pole Standards" located at the following NCDOT website: https://connect.ncdot.gov/resources/safety/Pages/ITS-Design-Resources.aspx

DESIGN REQUIREMENTS

2. Design the traffic signal structure using the loading conditions shown in the elevation views. These are anticipated worst case "design loads" and may not represent the actual loads that will be applied at the time of the installation. The contractor should refer to the traffic signal plans for the actual loads that will be applied at the time of the installation.
3. Design all signal supports using force ratios that do not exceed 0.9.
4. The camber design for the mast arm deflection should provide an appearance of a low pitched arch where the tip or the free end of the mast arm does not deflect below horizontal when fully loaded.
5. A clamp-type bolted mast arm-to-pole connection may be used instead of the welded ring stiffened box connection shown as long as the connection meets all of the design requirements. This requires staggering the connections. Use elevation data for each arm to determine appropriate arm connection points.
6. Design base plate with 8 anchor bolt holes. Provide 2 inch x 60 inch anchor bolts.
7. The mast arm attachment height (H1) shown is based on the following design assumptions:
   a. Mast arm slope and deflection are not considered in determining the arm attachment height as they are assumed to offset each other.
   b. Signal heads are rigidly mounted and vertically centered on the mast arm.
   c. The roadway clearance height for design is as shown in the elevation views.
   d. The top of the pole base plate is 0.75 feet above the ground elevation.
   e. Refer to the Elevation Data Chart for the elevation differences between the proposed foundation ground level and the high point of the roadway.
8. The pole manufacturer will determine the total height (H2) of each pole using the greater of the following:
   - Mast arm attachment height (H1) plus 2 feet, or
   - H1 plus 1/2 of the total height of the mast arm attachment assembly plus 1 foot.
9. If pole location adjustments are required, the contractor must gain approval from the Engineer as this may affect the mast arm lengths and arm attachment heights. The contractor may contact the Signal Design Section Senior Structural Engineer for assistance at (919) 814-5000.
10. The contractor is responsible for verifying that the mast arm length shown will allow proper positioning of the signal heads over the roadway.
11. The contractor is responsible for providing soil penetration testing data (SPT) to the pole manufacturer so site specific foundations can be designed.

NCDOT Wind Zone 4 (120 mph)

DOCUMENT NOT CONSIDERED FINAL UNLESS ALL SIGNATURES COMPLETED

Prepared in the Offices of:
Transportation Mobility and Safety Division
Signal Design Section
750 N.Greenfield Pkwy.Garner,NC 27529

SR 1006 (Old Stage Road)
at
SR 2720 (Grovement Road)

Division 5 | Wake County | Raleigh

PLAN DATE: March 2025 | REVIEWED BY:

PREPARED BY: J.A. Lohr | REVIEWED BY:

SCALE: 0 N/A N/A

REVISIONS	INIT.	DATE

SEAL
NORTH CAROLINA PROFESSIONAL SEAL 026486 ENGINEER ROBERT J. ZIEMBA

DocuSigned by: Robert J. Ziemba 04/01/2025
SIGNATURE | DATE

SIG. INVENTORY NO. 05-0602

01-APR-2025 07:25
S:\ITS\SIG\Signal\Signal Design Section\Central Region\Div 5\U-5302\05-0602 Rev#050602_sig_mp_2025xxxx.dgn
JALohr

METAL POLE No. 15

PROJECT REFERENCE NO.	SHEET NO.
U-5302	Sig 21.5

Design Loading for METAL POLE NO. 15

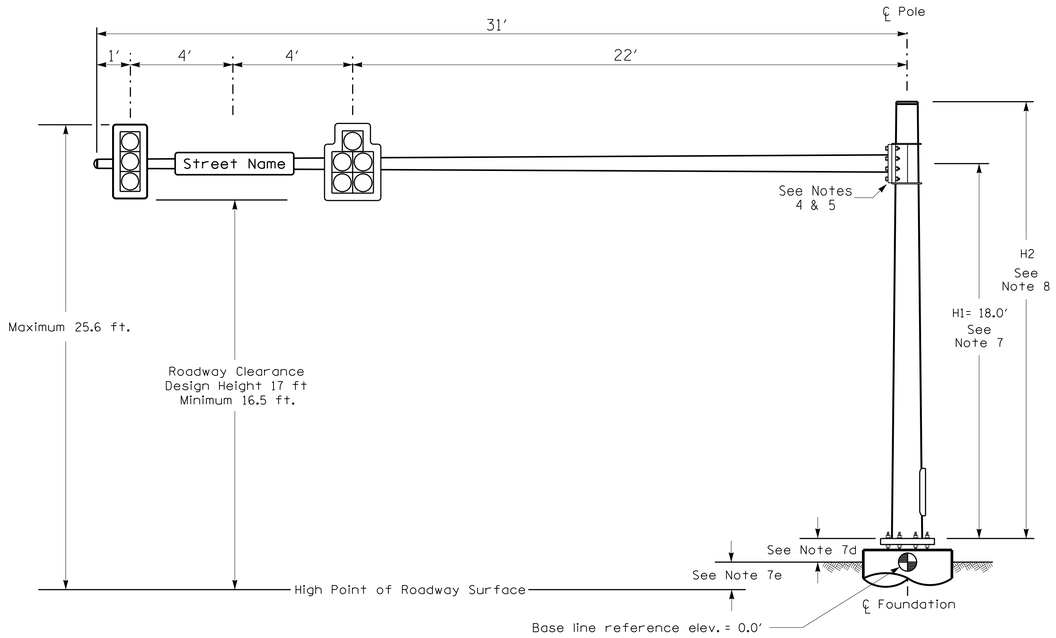

Elevation View

SPECIAL NOTE

The contractor is responsible for verifying that the mast arm attachment height (H1) will provide the "Design Height" clearance from the roadway before submitting final shop drawings for approval. Verify elevation data below which was obtained by field measurement or from available project survey data.

Elevation Data for Mast Arm Attachment (H1)

Elevation Differences for:	Pole 15	
Baseline reference point at ⊕ Foundation @ ground level	0.0 ft.	
Elevation difference at High point of roadway surface	-0.6 ft.	
Elevation difference at Edge of travelway or face of curb	-1.4 ft.	

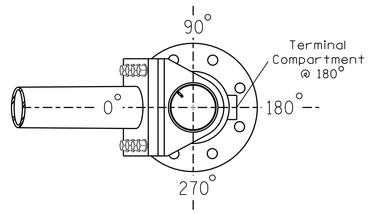

POLE RADIAL ORIENTATION

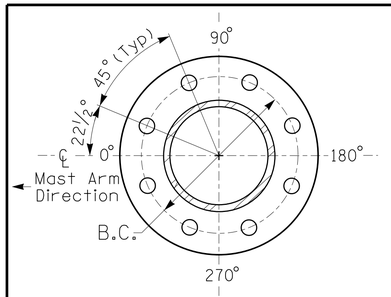

8 BOLT BASE PLATE DETAIL

See Note 6

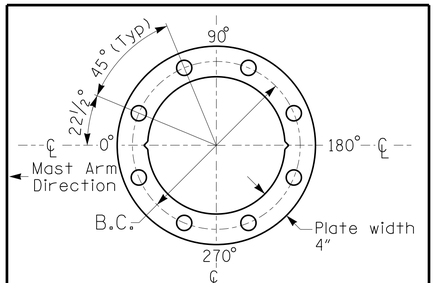

BASE PLATE TEMPLATE & ANCHOR BOLT LOCK PLATE DETAIL
For 8 Bolt Base Plate

MAST ARM LOADING SCHEDULE

LOADING SYMBOL	DESCRIPTION	AREA	SIZE	WEIGHT
	RIGID MOUNTED SIGNAL HEAD 12"-3 SECTION-WITH BACKPLATE	9.3 S.F.	25.5" W X 52.5" L	60 LBS
	RIGID MOUNTED SIGNAL HEAD 12"-5 SECTION-WITH BACKPLATE	16.3 S.F.	42.0" W X 56.0" L	103 LBS
Street Name	STREET NAME SIGN RIGID MOUNTED	16.0 S.F.	24.0" W X 96.0" L	36 LBS

NOTES

DESIGN REFERENCE MATERIAL

1. Design the traffic signal structure and foundation in accordance with:
   - The 1st Edition 2015 AASHTO LRFD "Standard Specifications for Structural Supports for Highway Signs, Luminaires, and Traffic Signals, including all of the latest interim revisions.
   - The 2024 NCDOT "Standard Specifications for Roads and Structures." The latest addenda to the specifications can be found in the traffic signal project special provisions.
   - The 2024 NCDOT Roadway Standard Drawings.
   - The traffic signal project plans and special provisions.
   - The NCDOT "Metal Pole Standards" located at the following NCDOT website: https://connect.ncdot.gov/resources/safety/Pages/ITS-Design-Resources.aspx

DESIGN REQUIREMENTS

2. Design the traffic signal structure using the loading conditions shown in the elevation views. These are anticipated worst case "design loads" and may not represent the actual loads that will be applied at the time of the installation. The contractor should refer to the traffic signal plans for the actual loads that will be applied at the time of the installation.
3. Design all signal supports using force ratios that do not exceed 0.9.
4. The camber design for the mast arm deflection should provide an appearance of a low pitched arch where the tip or the free end of the mast arm does not deflect below horizontal when fully loaded.
5. A clamp-type bolted mast arm-to-pole connection may be used instead of the welded ring stiffened box connection shown as long as the connection meets all of the design requirements.
6. Design base plate with 8 anchor bolt holes. Provide 2 inch x 60 inch anchor bolts.
7. The mast arm attachment height (H1) shown is based on the following design assumptions:
   a. Mast arm slope and deflection are not considered in determining the arm attachment height as they are assumed to offset each other.
   b. Signal heads are rigidly mounted and vertically centered on the mast arm.
   c. The roadway clearance height for design is as shown in the elevation views.
   d. The top of the pole base plate is 0.75 feet above the ground elevation.
   e. Refer to the Elevation Data Chart for the elevation differences between the proposed foundation ground level and the high point of the roadway.
8. The pole manufacturer will determine the total height (H2) of each pole using the greater of the following:
   - Mast arm attachment height (H1) plus 2 feet, or
   - H1 plus 1/2 of the total height of the mast arm attachment assembly plus 1 foot.
9. If pole location adjustments are required, the contractor must gain approval from the Engineer as this may affect the mast arm lengths and arm attachment heights. The contractor may contact the Signal Design Section Senior Structural Engineer for assistance at (919) 814-5000.
10. The contractor is responsible for verifying that the mast arm length shown will allow proper positioning of the signal heads over the roadway.
11. The contractor is responsible for providing soil penetration testing data (SPT) to the pole manufacturer so site specific foundations can be designed.

NCDOT Wind Zone 4 (120 mph)

DOCUMENT NOT CONSIDERED FINAL UNLESS ALL SIGNATURES COMPLETED

Prepared in the Offices of:
Transportation Mobility and Safety Division
Signal Design Section
750 N.Greenfield Pkwy.Garner,NC 27529

SR 1006 (Old Stage Road)
at
SR 2720 (Grovement Road)

Division 5 | Wake County | Raleigh

PLAN DATE: March 2025 | REVIEWED BY:
PREPARED BY: J.A. Lohr | REVIEWED BY:

SCALE: 0 N/A N/A

REVISIONS	INIT.	DATE

SEAL
NORTH CAROLINA PROFESSIONAL SEAL 026486 ENGINEER ROBERT J. ZIEMBA

DocuSigned by: Robert J Ziemba 04/01/2025
DATE

SIG. INVENTORY NO. 05-0602

01-APR-2025 07:27
S:\TTSA\MAT'LS\Signals\Signal Design Section\Central Region\Div 5\WU-5302\05-0602 Rev\050602_sig_mp_2025xxxx.dgn
JALOHr

PROJECT I.D.NO.	SHEET NO.
u-5302	Sig.M1A

STATE OF NORTH CAROLINA
DIVISION OF HIGHWAYS

STANDARD DRAWINGS FOR ALL METAL POLES (LRFD)

NCDOT METAL POLE STANDARDS

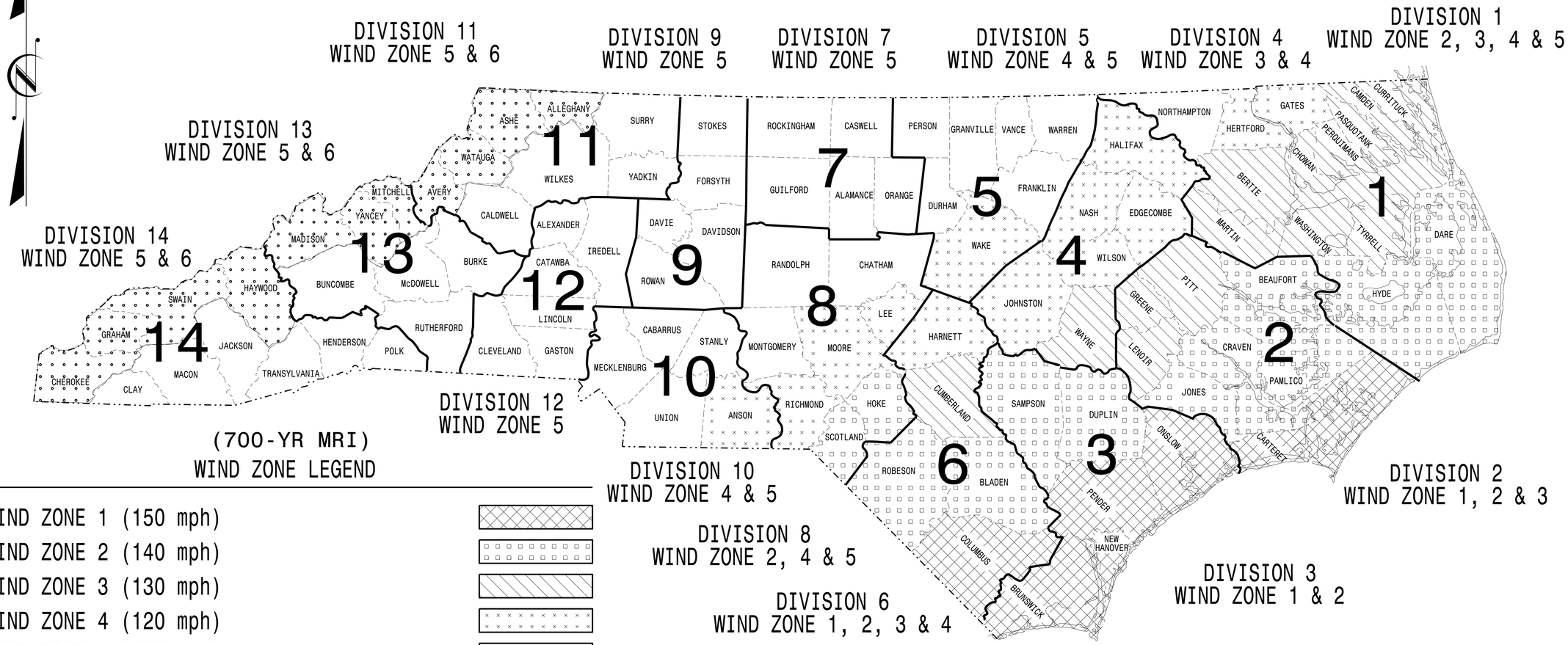

(700-YR MRI)
WIND ZONE LEGEND

WIND ZONE 1 (150 mph)	
WIND ZONE 2 (140 mph)	
WIND ZONE 3 (130 mph)	
WIND ZONE 4 (120 mph)	
WIND ZONE 5 (110 mph)	
WIND ZONE 6 (135 mph) Special Wind Zone	

https://connect.ncdot.gov/resources/safety/Pages/ITS-Design-Resources.aspx

Prepared in the Offices of:

Transportation Mobility and Safety Division
Signal Design Section
750 N.Greenfield Pkwy.
Garner, NC 27529

Designed in conformance with the latest 2020 Interim to the 1st Edition 2015

AASHTO LRFD

Standard Specifications for Highway Signs, Luminaires, and Traffic Signals

INDEX OF PLANS

DRAWING NUMBER	DESCRIPTION
Sig. M 1A	Statewide Wind Zone Map (700–yr MRI)
Sig. M 1B	Statewide Wind Zone Map (10–yr MRI)
Sig. M 2	Typical Fabrication Details–All Metal Poles
Sig. M 3	Typical Fabrication Details–Strain Poles
Sig. M 4	Typical Fabrication Details–Mast Arm Poles
Sig. M 5	Typical Fabrication Details–Mast Arm Connection
Sig. M 6	Typical Fabrication Details–Strain Pole Attachments
Sig. M 7	Construction Details–Foundations
Sig. M 8	Standard Strain Pole Foundation–All Soil Conditions
Sig. M 9	Typical Fabrication Details–CCTV Camera Poles

MOBILITY AND SAFETY DIVISION – TRANSPORTATION SYSTEMS MANAGEMENT AND OPERATIONS UNIT

D.Y. ISHAK – STATE SIGNALS ENGINEER

K. DURIGON, P.E. – ITS AND SIGNALS STRUCTURAL ENGINEER

B. WALKER, P.E. – ITS AND SIGNALS STRUCTURAL ENGINEER

SEAL

NORTH CAROLINA PROFESSIONAL SEAL 036626 ENGINEER KEVIN C. DURIGON

DocuSigned by:
Kevin Durigon
SIGNATURE
4B23DC79B3784DA...
09/21/2023
DATE

03-OCT-2023 13:07
S:\TISSUM\ITS Signals\Signal Design Sections\Structures\Drawings\2024 Metal Pole Std Drawings for LRFD\2024 Sig. M1A Standard All Metal Pole (700-yr MRI).dgn
kdurigon

PROJECT I.D. NO.	SHEET NO.
U-5302	Sig.M1B

STATE OF NORTH CAROLINA
DIVISION OF HIGHWAYS

STANDARD DRAWINGS FOR ALL METAL POLES (LRFD)

NCDOT METAL POLE STANDARDS

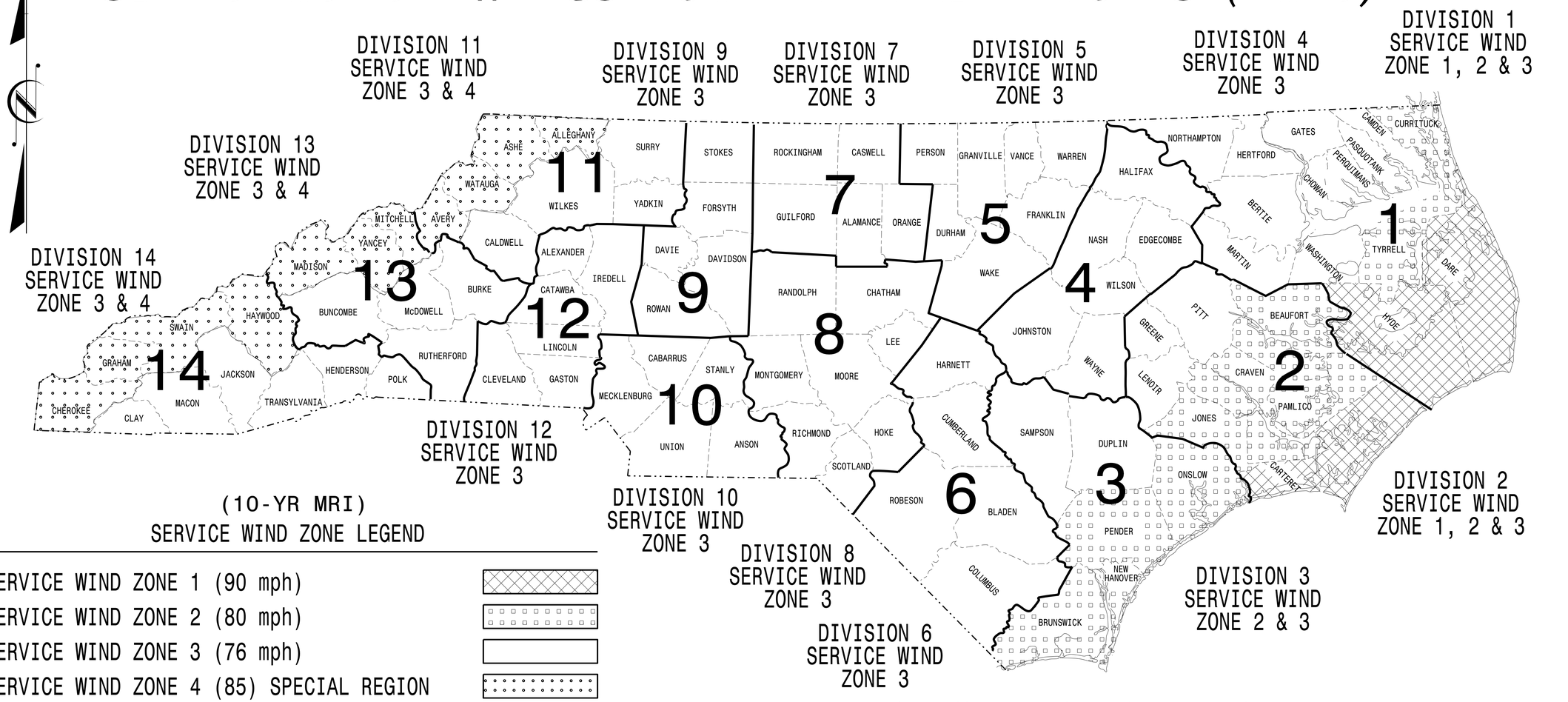

(10-YR MRI)
SERVICE WIND ZONE LEGEND

SERVICE WIND ZONE 1 (90 mph)	
SERVICE WIND ZONE 2 (80 mph)	
SERVICE WIND ZONE 3 (76 mph)	
SERVICE WIND ZONE 4 (85) SPECIAL REGION	

https://connect.ncdot.gov/resources/safety/Pages/ITS-Design-Resources.aspx

Prepared in the Offices of:

Transportation Mobility and Safety Division
STATE OF NORTH CAROLINA
DEPARTMENT OF TRANSPORTATION
Signal Design Section

750 N.Greenfield Pkwy,
Garner,NC 27529

Designed in conformance with the latest 2020 Interim to the 1st Edition 2015

AASHTO LRFD

Standard Specifications for Highway Signs, Luminaires, and Traffic Signals

INDEX OF PLANS

DRAWING NUMBER	DESCRIPTION
Sig. M 1A	Statewide Wind Zone Map (700–yr MRI)
Sig. M 1B	Statewide Wind Zone Map (10–yr MRI)
Sig. M 2	Typical Fabrication Details–All Metal Poles
Sig. M 3	Typical Fabrication Details–Strain Poles
Sig. M 4	Typical Fabrication Details–Mast Arm Poles
Sig. M 5	Typical Fabrication Details–Mast Arm Connection
Sig. M 6	Typical Fabrication Details–Strain Pole Attachments
Sig. M 7	Construction Details–Foundations
Sig. M 8	Standard Strain Pole Foundation–All Soil Conditions
Sig. M 9	Typical Fabrication Details–CCTV Camera Poles

NCDOT CONTACTS:

MOBILITY AND SAFETY DIVISION – TRANSPORTATION SYSTEMS MANAGEMENT AND OPERATIONS UNIT

D.Y. ISHAK – STATE SIGNALS ENGINEER

K. DURIGON, P.E. – ITS AND SIGNALS STRUCTURAL ENGINEER

B. WALKER, P.E. – ITS AND SIGNALS STRUCTURAL ENGINEER

SEAL

NORTH CAROLINA PROFESSIONAL SEAL 036626 ENGINEER KEVIN C. DURIGON

DocuSigned by:
Kevin Durigon
SIGNATURE
4B23DC79B3784DA...

09/21/2023
DATE

03-OCT-2023 12:21
S:*ITS&SU*ITS Signals*Signal Design Section*Structures*Drawings*2024 Metal Pole Std Drawings for LRFD*2024 Sig. M1B Standard All Metal Pole (10-yr MRI).dgn
kcdurigon

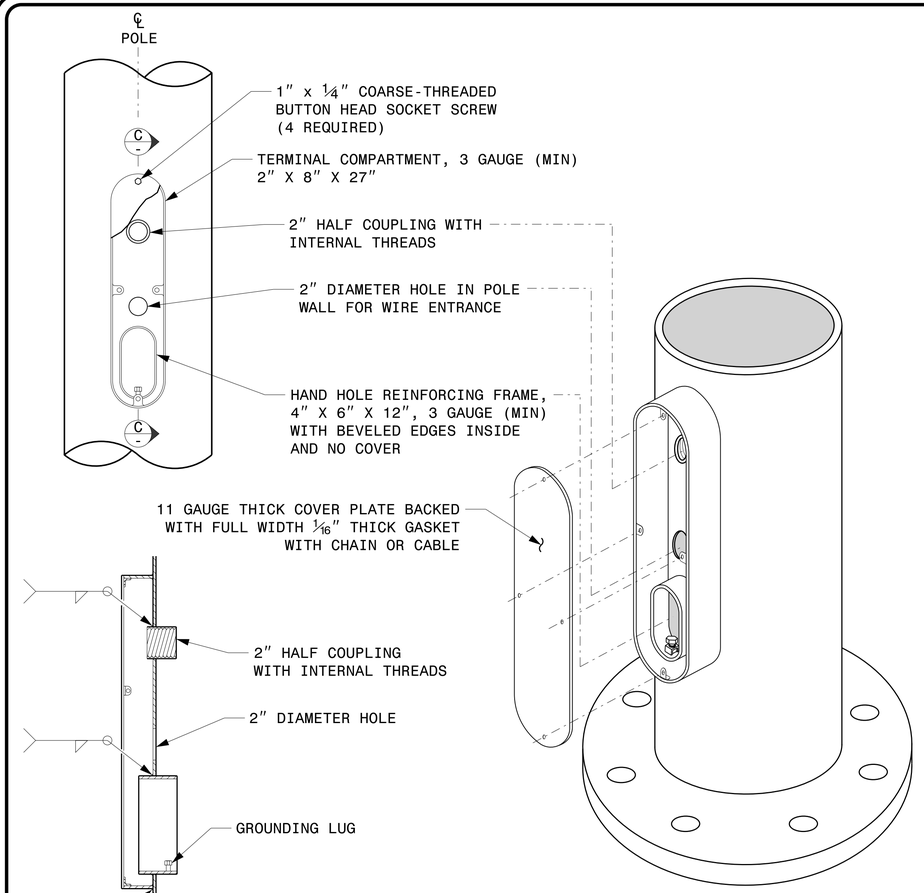

SECTION C-C

NOTE: UNLESS OTHERWISE SPECIFIED, LOCATE TERMINAL COMPARTMENT 1 FOOT ABOVE THE POLE BASE AT 180 DEGREES ON THE POLE'S RADIAL INDEX.

TERMINAL COMPARTMENT DETAIL

MFG _____ MFG. DATE: MM/YY
SHAFT D/T/L/Y ----/----/----/----
ARM-A D/T/L/Y ----/----/----/----
----/----/----/----
ARM-B D/T/L/Y ----/----/----/----
----/----/----/----
A.B. DIA./B.C./L/Y ----/----/----/----
NCDOT SIG. INV. NO. _ _ _ _ _ _ _ _
NCDOT POLE NO. _ _ _ _ _ _ _ _

SHAFT I.D. TAG
(PROVIDE ON SHAFT OF STRAIN POLES
AND MAST ARM POLE SHAFT)

MFG _____ MFG. DATE: MM/YY
SECTION D/T/L/Y ----/----/----/----
NCDOT SIG. INV. NO. _ _ _ _ _ _ _ _
NCDOT POLE NO. _ _ _ _ _ _ _ _

ARM I.D. TAG
(PROVIDE ON EACH SECTION OF
A MULTI-SECTION MAST ARM)

NOTES:

1. D = DIAMETER, T = THICKNESS, L = LENGTH, Y = YIELD STRENGTH
2. A.B. = ANCHOR BOLT
3. B.C. = BOLT CIRCLE OF ANCHOR BOLTS
4. IF STANDARD DESIGN, INCLUDE CASE NUMBER IN ADDITION TO POLE NUMBER ON "NCDOT POLE NO." LINE.
5. SIGNAL INV. NUMBER AND POLE I.D. NUMBER. SEE DRAWING M3 AND M4 FOR MOUNTING POSITIONS OF I.D. TAGS.

IDENTIFICATION TAG DETAILS

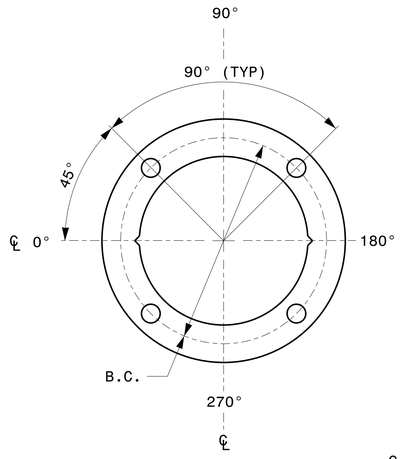

4 BOLT PATTERN

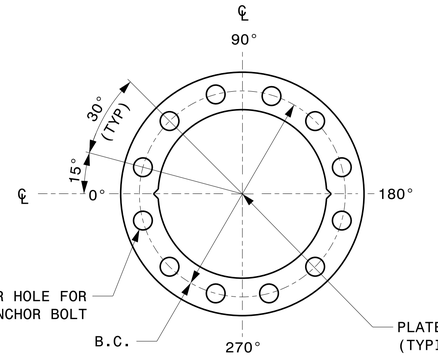

12 BOLT PATTERN

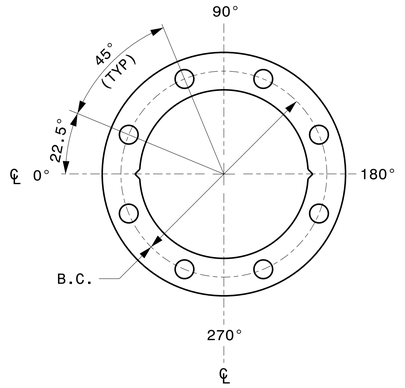

8 BOLT PATTERN

CONSTRUCT TEMPLATES AND PLATES FROM ¼″ (MIN) THICK STEEL. GALVANIZING IS NOT REQUIRED.

BASE PLATE TEMPLATE AND ANCHOR BOLT LOCK PLATE DETAILS

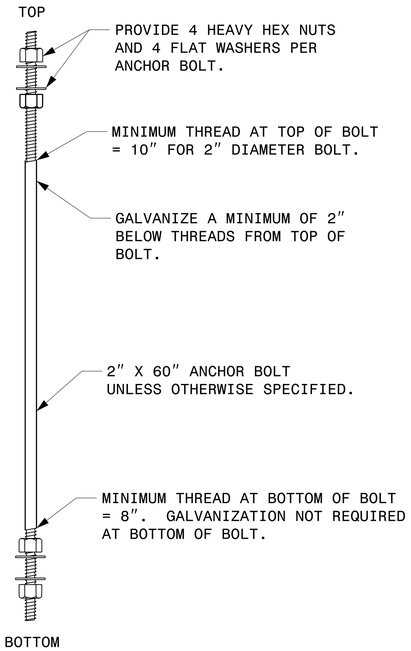

ANCHOR BOLT DETAIL

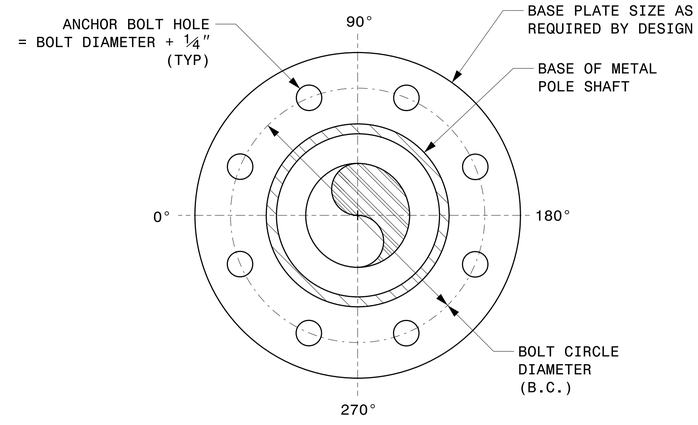

NOTE: BASE PLATE MAY BE CIRCULAR, OCTAGONAL, SQUARE OR RECTANGULAR IN SHAPE.

TYPICAL BASE PLATE DETAIL

PROJECT I.D. NO.	SHEET NO.
U-5302	Sig.M2

Fabrication Details – All Metal Poles

Prepared In the Offices of:
Transportation Mobility and Safety Division
Signal Design Section
750 N.Greenfield Pkwy.Garner,NC 27529

SCALE 0 NA NONE

Typical Fabrication Details For All Metal Poles

PLAN DATE: SEPTEMBER 2023 DESIGNED BY: C.F.ANDREWS
PREPARED BY: K.C. DURIGON REVIEWED BY: D.C. SARKAR

REVISIONS	INIT.	DATE

SEAL
NORTH CAROLINA PROFESSIONAL SEAL 036626 ENGINEER KEVIN C. DURIGON

DocuSigned by:
Kevin Durigon
SIGNATURE
4B23DC79B3784DA...
09/21/2023
DATE

03-OCT-2023 12:24
S:\TTSSUM\TIS\Signal Design Section\Structures\Drawings\2024 Metal Pole Std Drawings for LRFD\2024 Sig-M2 Std. Fabrication Details-All Poles.dgn
kcdurigon

PROJECT I.D. NO.	SHEET NO.
U-5302	Sig.M3

Fabrication Details – Strain Poles

NOTE:

1. OPENING IN POLE BASE PLATE SHALL BE EQUAL TO POLE BASE INSIDE DIAMETER MINUS 3½" BUT SHALL NOT BE LESS THAN 8½".

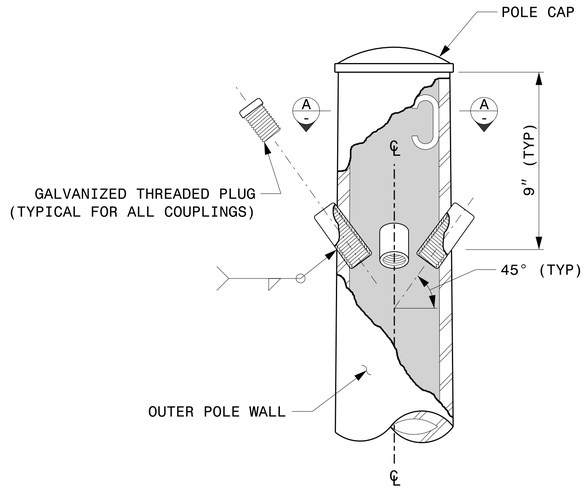

CABLE ENTRANCES AT TOP OF POLE

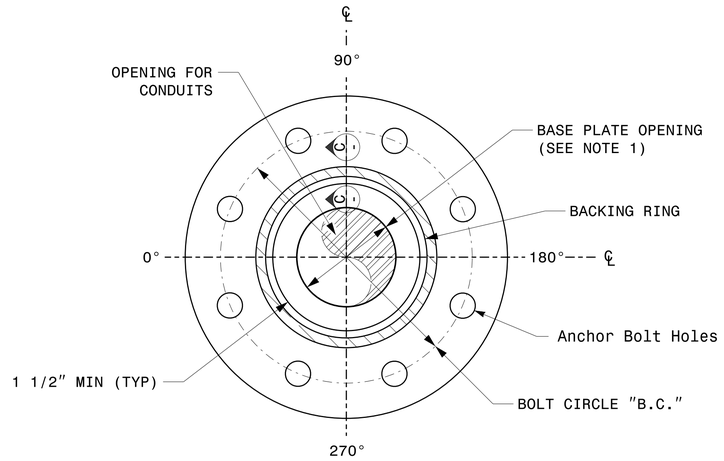

SECTION B-B

POLE BASE PLATE DETAILS
(8 AND 12 BOLT PATTERN)

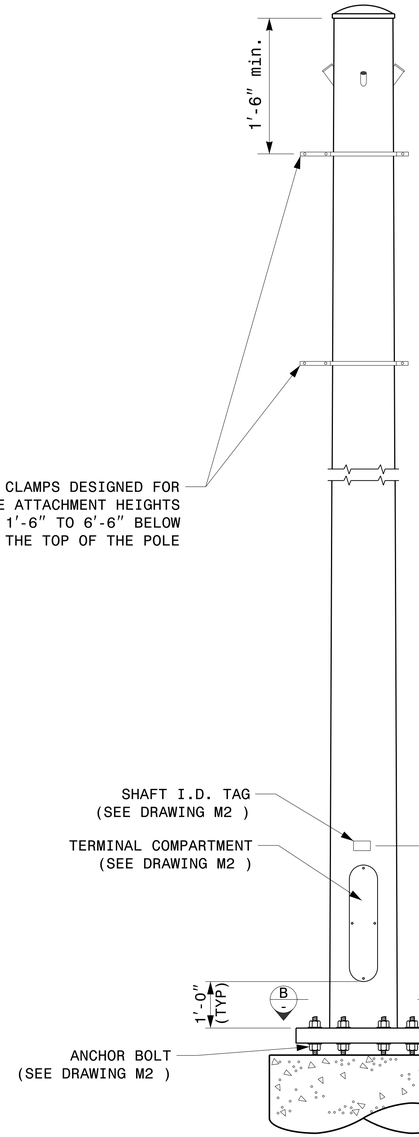

MONOTUBE STRAIN POLE

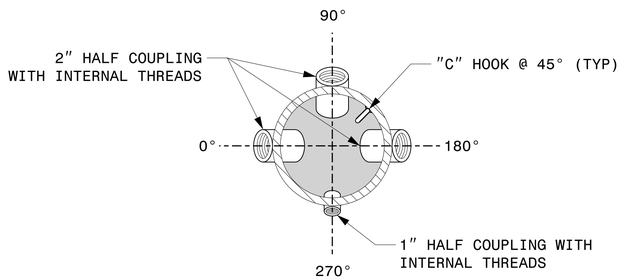

SECTION A-A

RADIAL ORIENTATION OF FACTORY INSTALLED ACCESSORIES AT TOP OF POLE

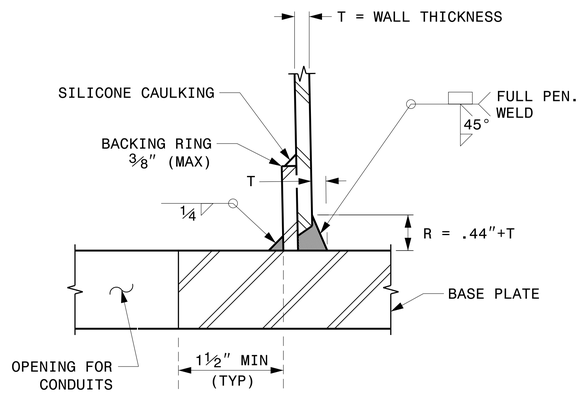

SECTION C-C

(POLE ATTACHMENT TO BASE PLATE)

FULL-PENETRATION GROOVE WELD DETAIL

Prepared In the Offices of:
Transportation Mobility and Safety Division
Signal Design Section
750 N.Greenfield Pkwy,Garner,NC 27529

SCALE
0 NA
NONE

Typical Fabrication Details
For
Strain Poles

PLAN DATE:	SEPTEMBER 2023	DESIGNED BY:	K.C. DURIGON
PREPARED BY:	K.C. DURIGON	REVIEWED BY:	D.C. SARKAR

REVISIONS	INIT.	DATE

SEAL
NORTH CAROLINA
PROFESSIONAL
SEAL
036626
ENGINEER
KEVIN C. DURIGON

DocuSigned by:
Kevin Durigon
SIGNATURE
4B23DC79B3784DA...
09/21/2023
DATE

03-OCT-2023 12:31
S:\TIS&SUM\ITS\Signals\Signal Design Sections\Structures\Drawings\2024 Metal Pole Std Drawings for LRFD\2024 Sig_M3 Std. Fabrication Details-Strain Poles.dgn
kcdurigon

PROJECT I.D. NO.	SHEET NO.
U-5302	Sig.M4

Fabrication Details – Mast Arm Poles

NOTE:

1. OPENING IN POLE BASE PLATE SHALL BE EQUAL TO POLE BASE INSIDE DIAMETER MINUS 3½" BUT SHALL NOT BE LESS THAN 8½".

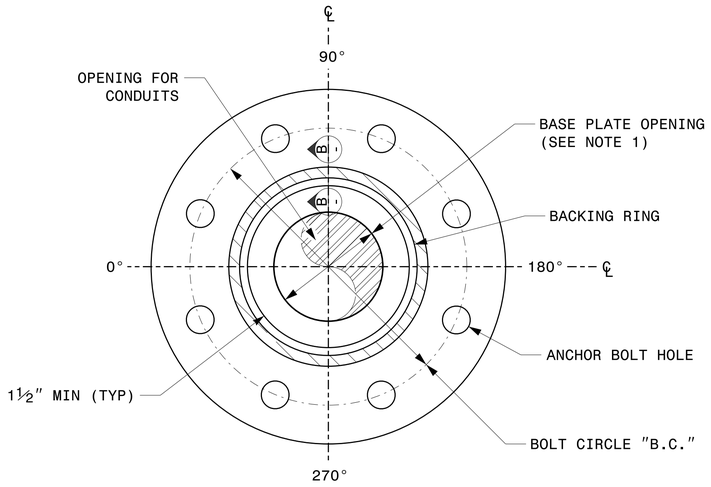

SECTION A-A
POLE BASE PLATE DETAILS

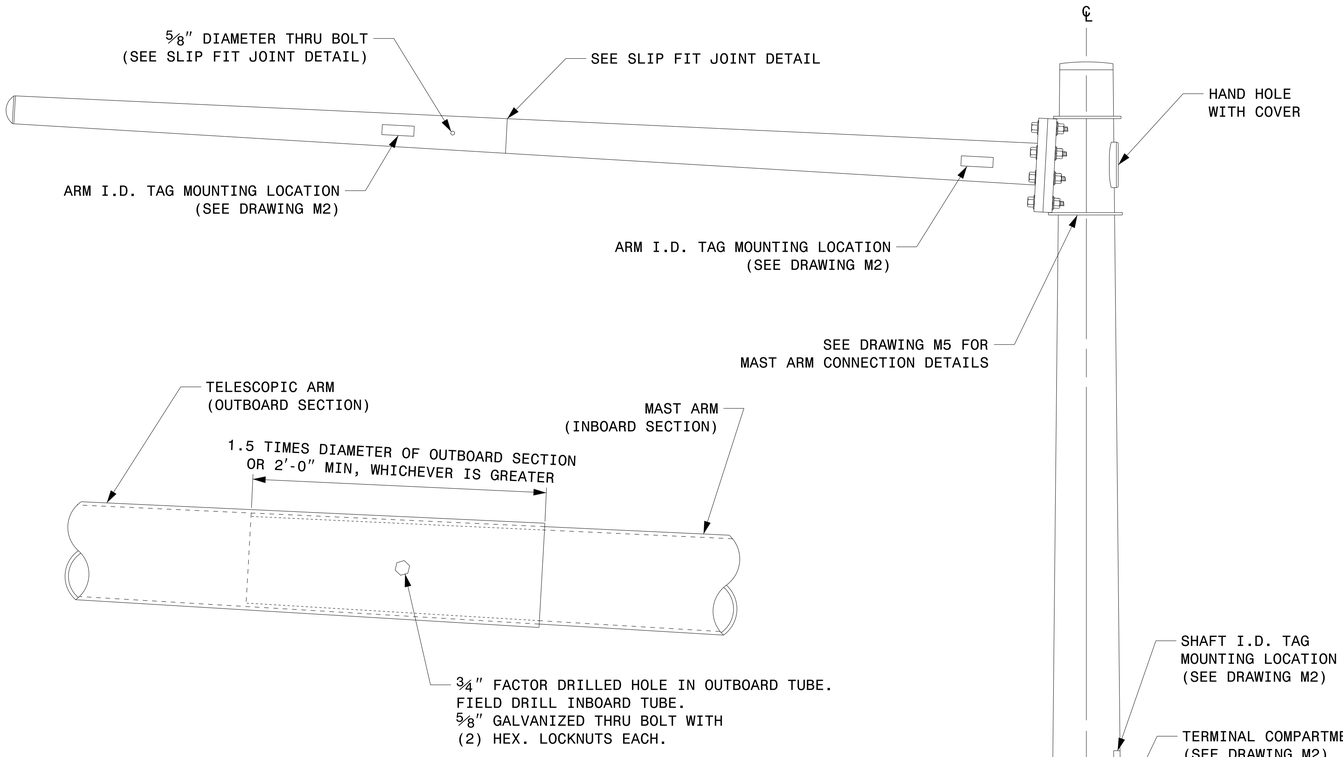

SLIP FIT JOINT DETAIL FOR MAST ARM

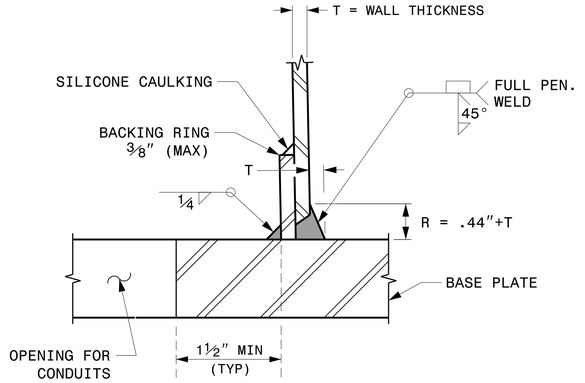

SECTION B-B
(POLE ATTACHMENT TO BASE PLATE)

FULL-PENETRATION GROOVE WELD DETAIL

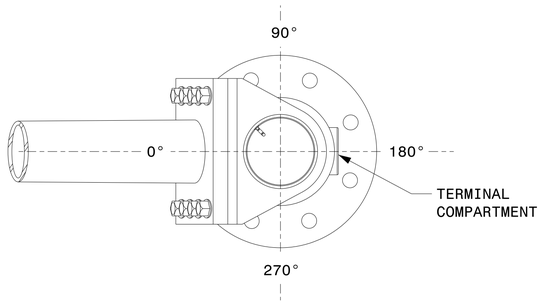

MAST ARM RADIAL ORIENTATION

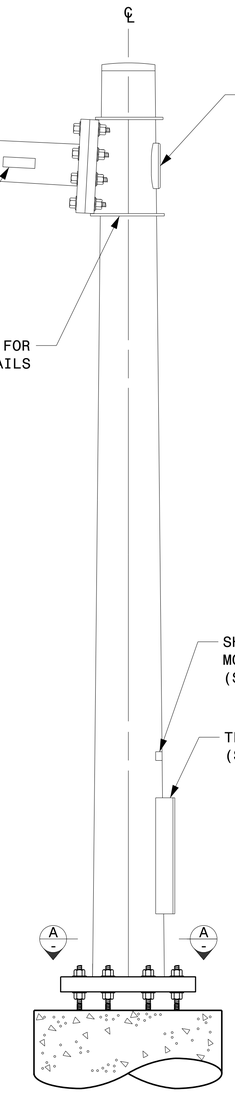

MAST ARM POLE

Prepared in the Offices of:
Transportation Mobility and Safety Division
Signal Design Section
750 N.Greenfield Pkwy,Garner,NC 27529

SCALE
0 NA
NONE

Typical Fabrication Details For Mast Arm Poles

PLAN DATE: SEPTEMBER 2023	DESIGNED BY: K.C. DURIGON
PREPARED BY: K.C. DURIGON	REVIEWED BY: D.C. SARKAR

REVISIONS	INIT.	DATE

SEAL
NORTH CAROLINA PROFESSIONAL SEAL 036626 ENGINEER KEVIN C. DURIGON

DocuSigned by:
Kevin Durigon
SIGNATURE
4B23DC79B3784DA
09/21/2023
DATE

03-OCT-2023 12:35
S:\ITS&SU\ITS Signals\Signal Design Section\Structures\Drawings\2024 Metal Pole Std Drawings for LRFD\2024 Sig.M4 Std. Fabrication Details-Mast Arm Poles.dgn
kcdurigon

WELDED RING STIFFENED MAST ARM CONNECTION

PROJECT I.D. NO.	SHEET NO.
U-5302	Sig.M5

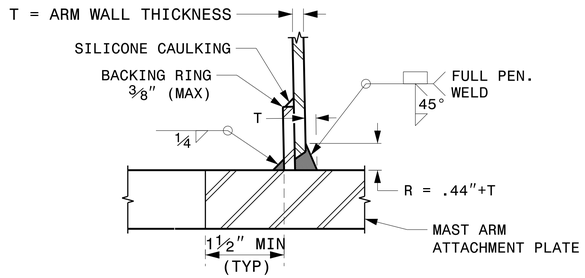

SECTION B-B
FULL-PENETRATION GROOVE WELD DETAIL

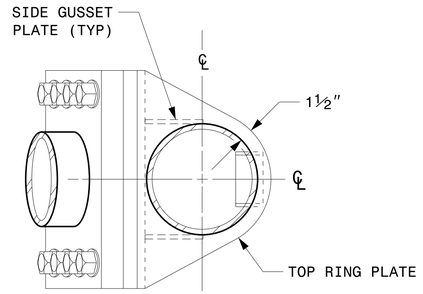

PLAN VIEW

NOTES:

1. PROVIDE A PERMANENT MEANS OF IDENTIFICATION ABOVE THE MAST ARM TO INDICATE PROPER ATTACHMENT ORIENTATION OF THE MAST ARM.
2. DESIGNER WILL DETERMINE THE SIZE OF ALL STRUCTURAL COMPONENTS, PLATES, FASTENERS, AND WELDS SHOWN UNLESS THEY ARE ALREADY SPECIFIED.
3. FABRICATOR IS RESPONSIBLE FOR PROVIDING APPROPRIATE HOLES AT DRAINAGE POINTS TO DRAIN GALVANIZING MATERIALS.
4. FOR MINIMUM EDGE DISTANCE AND NOMINAL BOLT HOLE SIZE, FOLLOW THE LATEST AISC STEEL CONSTRUCTION MANUAL.
5. PROVIDE UPPER HANDHOLE AS NECESSARY WHEN SHAFT EXTENSIONS ARE REQUIRED FOR LUMINAIRE ARMS OR CAMERA. FOR POLES WITHOUT LUMINAIRES/CAMERA, WIRING CAN BE DONE THROUGH THE TOP OF POLE.
6. ALLOWABLE RANGE OF FLANGE TILT ANGLE WILL VARY FROM 0° TO AS REQUIRED.

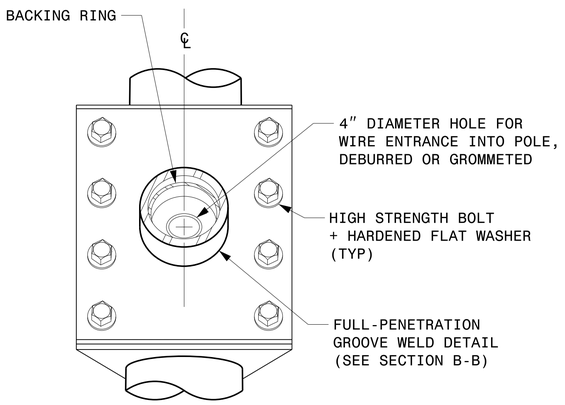

FRONT ELEVATION VIEW

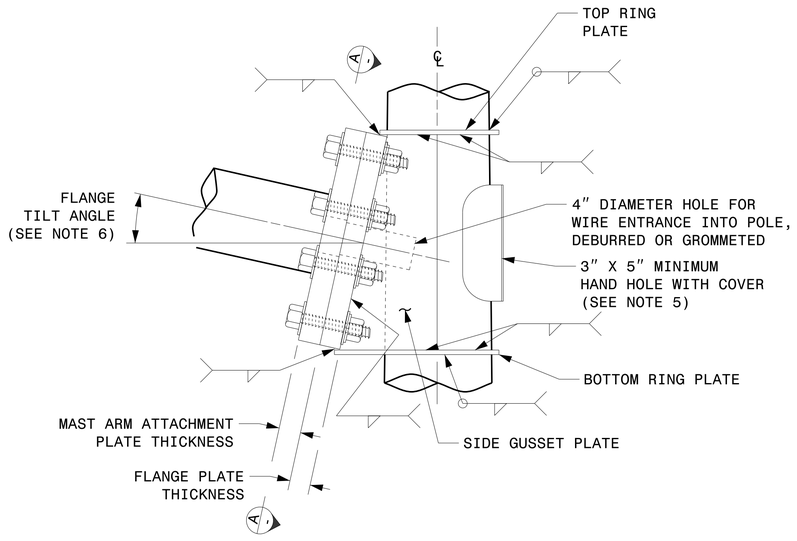

SIDE ELEVATION VIEW

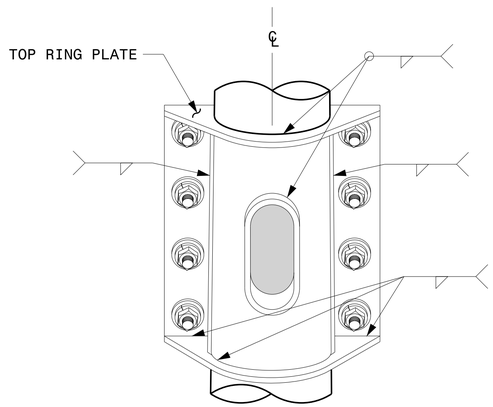

BACK ELEVATION VIEW

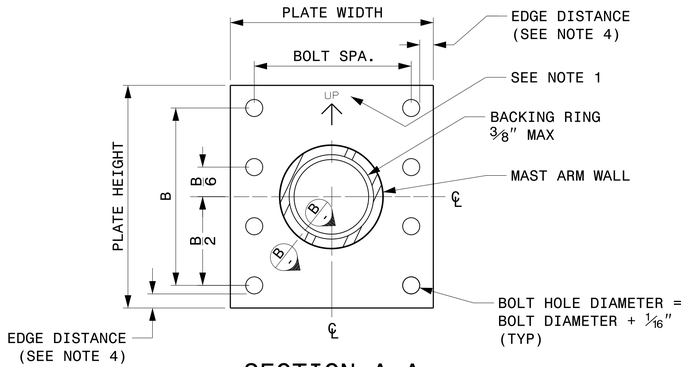

SECTION A-A
MAST ARM ATTACHMENT PLATE

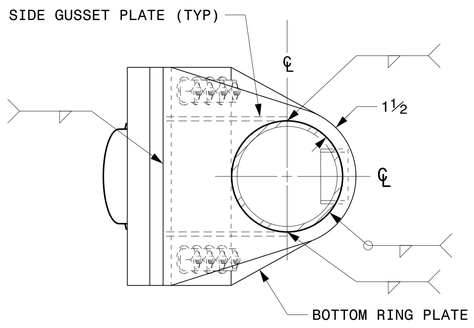

BOTTOM VIEW

Fabrication Details – Mast Arm Connection

Prepared in the Offices of:
Transportation Mobility and Safety Division
Signal Design Section
750 N.Greenfield Pkwy,Garner,NC 27529

SCALE
0 NA
NONE

Typical Fabrication Details
For
Mast Arm Connection To Pole

PLAN DATE:	SEPTEMBER 2023	DESIGNED BY:	C.F. ANDREWS
PREPARED BY:	K.C. DURIGON	REVIEWED BY:	D.C. SARKAR

REVISIONS	INIT.	DATE

SEAL
NORTH CAROLINA PROFESSIONAL SEAL 036626 ENGINEER KEVIN C. DURIGON

DocuSigned by:
Kevin Durigon
SIGNATURE
4B23DC79B3784DA...
09/21/2023
DATE

03-OCT-2023 12:38
S:\ITS&SU\ITS Signals\Signal Design Section\Structures\Drawings\2024 Metal Pole Std Drawings for LRFD\2024 Sig.M5 Std. Connection Fabrication Details-Mast Arm Poles.dgn
kcdurigon

PROJECT I.D. NO.	SHEET NO.
U-5302	Sig.M6

Fabrication Details – Strain Pole Attachments

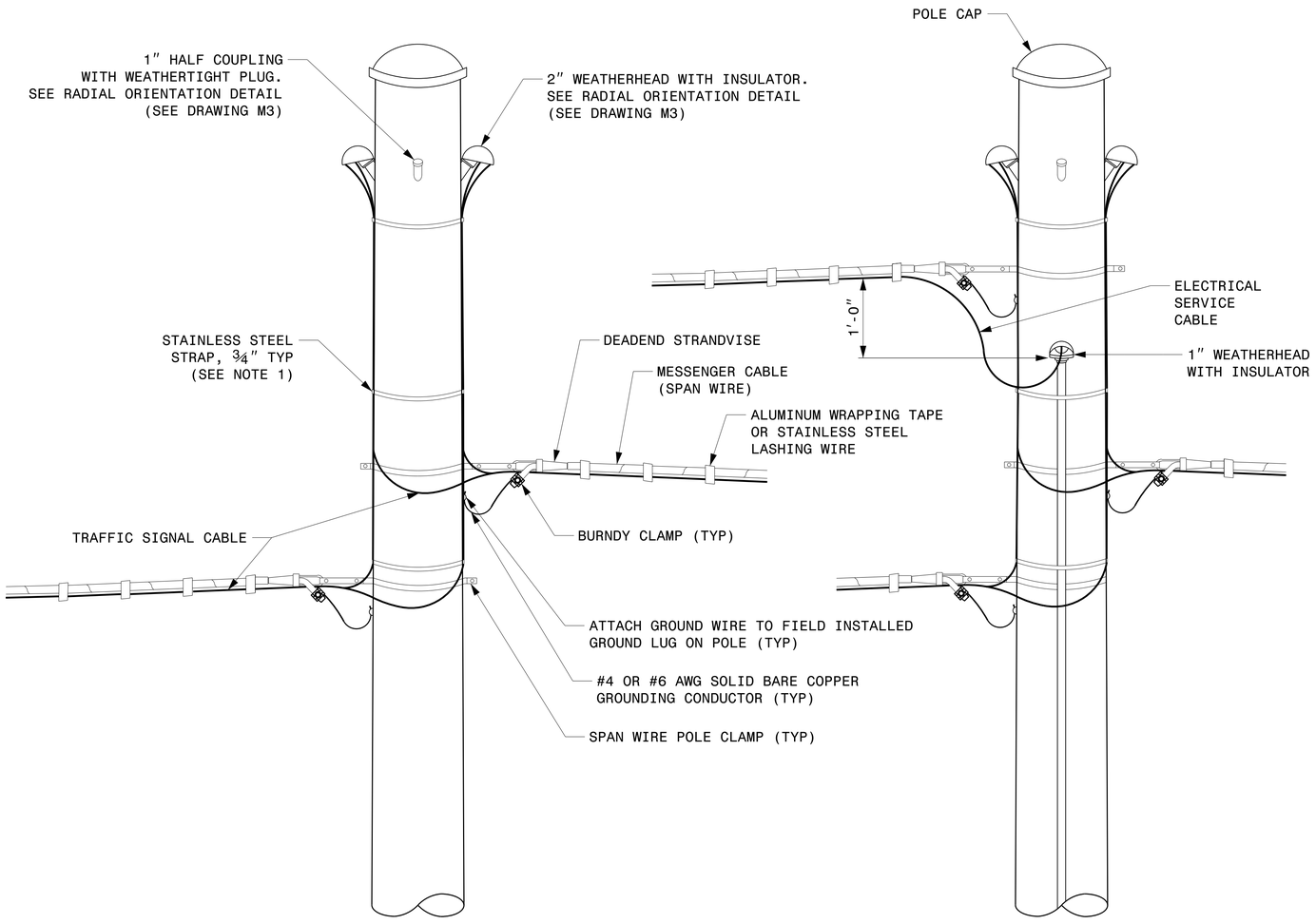

STRAIN POLE ATTACHMENTS

NOTES:

1. STRAP ALL SIGNAL CABLES TO THE SIDE OF THE POLE WITH ¾" STAINLESS STEEL STRAPS WHEN THE DISTANCE BETWEEN SPAN WIRE ATTACHMENT CLAMP AND WEATHERHEADS EXCEEDS 3'-0".
2. PROVIDE MINIMUM TWO SPAN WIRE POLE CLAMPS PER POLE.
3. IT IS PROHIBITED TO ATTACH TWO SPAN WIRES AT ONE POLE CLAMP.
4. FOR GENERAL REQUIREMENTS, REFER TO NCDOT STANDARD SPECIFICATIONS FOR ROADWAY AND STRUCTURES, JANUARY 2024.

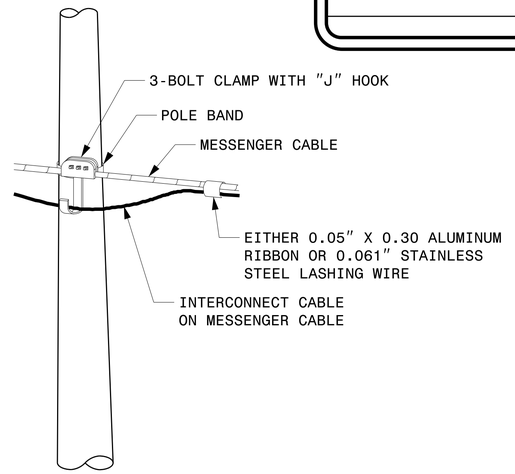

ATTACHMENT OF CABLE TO INTERMEDIATE METAL POLE

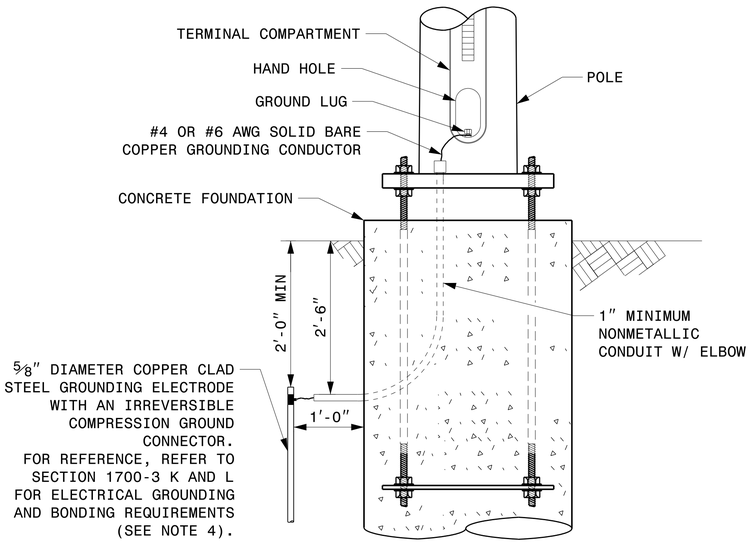

METAL POLE GROUNDING DETAIL FOR STRAIN POLE AND MAST ARM

Prepared in the Offices of:
Transportation Mobility and Safety Division
STATE OF NORTH CAROLINA
DEPARTMENT OF TRANSPORTATION
Signal Design Section
750 N.Greenfield Pkwy,Garner,NC 27529

SCALE
0 NA
NONE

Typical Fabrication Details For Strain Pole Attachments

PLAN DATE: SEPTEMBER 2023	DESIGNED BY: C.F. ANDREWS
PREPARED BY: K.C. DURIGON	REVIEWED BY: D.C. SARKAR

REVISIONS	INIT.	DATE

SEAL
NORTH CAROLINA PROFESSIONAL SEAL 036626 ENGINEER KEVIN C. DURIGON

DocuSigned by:
Kevin Durigon
SIGNATURE
4B23DC79B3784DA...
09/21/2023
DATE

03-OCT-2023 12:41
S:\TIS\SUMITS Signals\Signal Design Section\Structures\Drawings\2024 Metal Pole Std Drawings for LRFD\2024 Sig.M6 Std. Fabrication Details-Strain Poles.dgn
kcdurigon

PROJECT I.D. NO.	SHEET NO.
U-5302	Sig.M7

Construction Details – Foundations

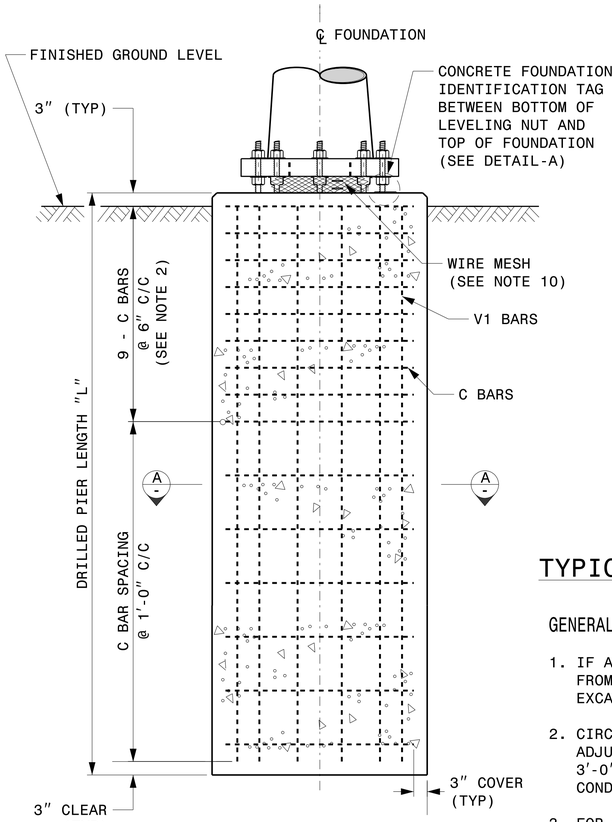

CONCRETE SHAFT ELEVATION

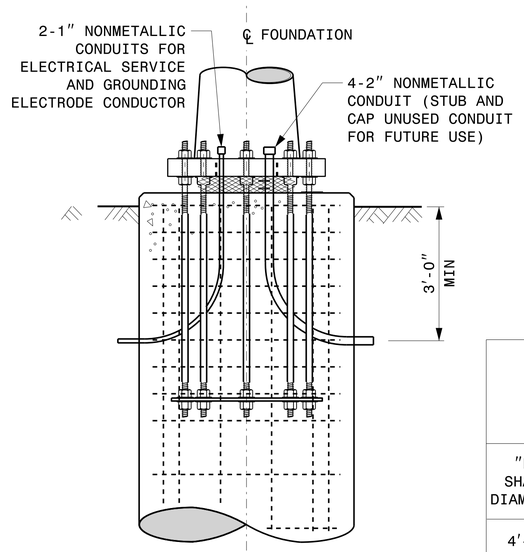

TYPICAL FOUNDATION CONDUIT DETAILS

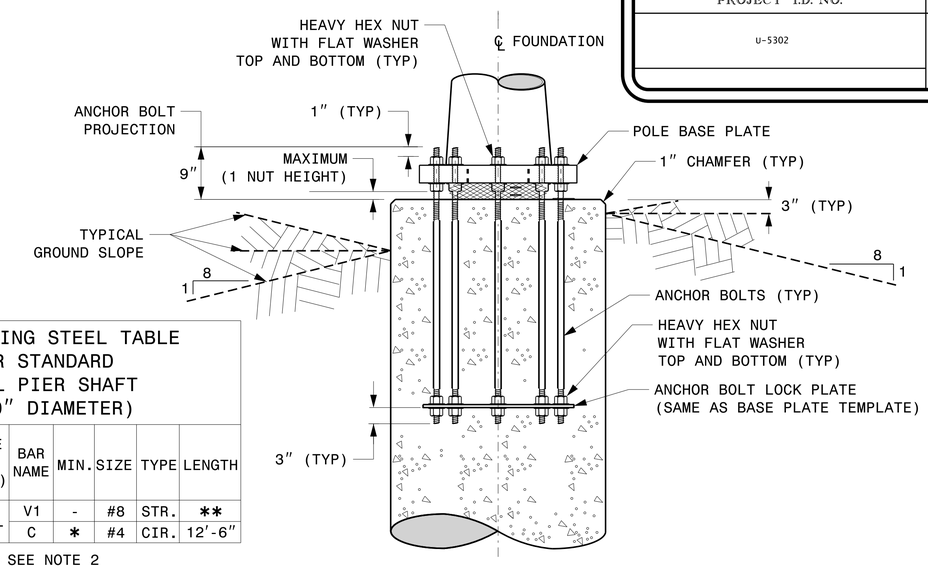

TYPICAL FOUNDATION ANCHOR BOLT DETAILS

(REINFORCING CAGE NOT SHOWN FOR CLARITY)

REINFORCING STEEL TABLE FOR STANDARD DRILL PIER SHAFT (4′-0″ DIAMETER)

"D" SHAFT DIAMETER	CONCRETE VOLUME (CU. YDS)	BAR NAME	MIN.	SIZE	TYPE	LENGTH
4′-0″	.465 X L	V1	-	#8	STR.	**
		C	*	#4	CIR.	12′-6″

* SEE NOTE 2
** SEE NOTE 3

GENERAL NOTES:

1. IF ACTUAL SUBSURFACE CONDITIONS DIFFER SIGNIFICANTLY FROM BORING DATA, CONTACT THE ENGINEER BEFORE EXCAVATING OR PLACING CONCRETE.
2. CIRCULAR TIE REINFORCING RINGS MAY BE VERTICALLY ADJUSTED BY +/-3″ AT A DEPTH BETWEEN 2′-0″ AND 3′-0″ TO FACILITATE THE INSTALLATION OF ELECTRICAL CONDUIT ENTERING IN THE CAGE.
3. FOR STANDARD FOUNDATIONS, SEE SHEET SIG. M8 FOR DETAILS. VERTICAL REINFORCING BARS (V1) MAY BE HORIZONTALLY ADJUSTED BY +/-3″ TO FACILITATE THE INSTALLATION OF ELECTRICAL CONDUIT ENTERING INTO THE CAGE.
4. PROVIDE 2″ TO 5″ FOUNDATION PROJECTION ABOVE GROUND LEVEL, DEPENDING ON THE GROUND SLOPE.
5. UNLESS OTHERWISE SHOWN, FOUNDATION DESIGNS ARE BASED ON NON-SLOPING LEVEL GROUND SURFACES WITH SLOPE RATIOS OF 8:1 (H:V) OR FLATTER. IF ACTUAL GROUND LINE SLOPES ARE STEEPER, CONTACT THE ENGINEER BEFORE EXCAVATING OR PLACING CONCRETE.
6. CONSTRUCT FOUNDATIONS IN ACCORDANCE WITH NCDOT STANDARD PROVISIONS SP09 R005- FOUNDATIONS AND ANCHOR ROD ASSEMBLIES FOR METAL POLES. ALL APPLICABLE 2024 NCDOT STANDARD SPECIFICATIONS ARE REFERENCED IN THIS PROVISION. REFER TO THE NCDOT RESOURCES/SPECIFICATIONS PAGE LOCATED ON THE CONNECT NCDOT WEBSITE.

   https://connect.ncdot.gov/resources/Specifications and Special Provisions.aspx
7. USE AIR ENTRAINED AA CONCRETE MIX WITH A COMPRESSION STRENGTH OF f′c=4500 psi (MIN) AFTER 28 DAYS.
8. USE ASTM A615 GRADE 60 DEFORMED BARS FOR ALL REINFORCING STEEL. MAINTAIN AT LEAST 3″ COVER ON ALL REINFORCEMENT.
9. LOCATE IDENTIFICATION TAG ON TOP OF THE FOUNDATION, DIRECTLY ABOVE THE CONDUIT'S ENTRY POINT.
10. PROVIDE TWO LAYERS OF 4 MESH GALVANIZED WELDED 23 GAUGE (0.025) 6″ WIDE AROUND PIPES UNDER THE BASE PLATE AND SECURE IT WITH TIES IF NECESSARY.
11. PREFERRED LOCATION FOR THE I.D. TAG IS AS SHOWN IN DETAIL-A: DIRECTLY ABOVE THE CONDUIT ENTERING THE FOUNDATION.

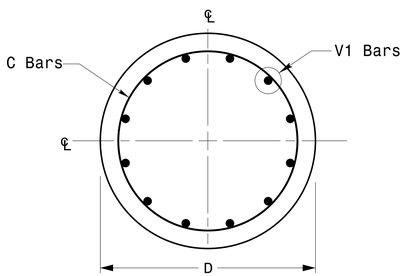

SECTION A-A

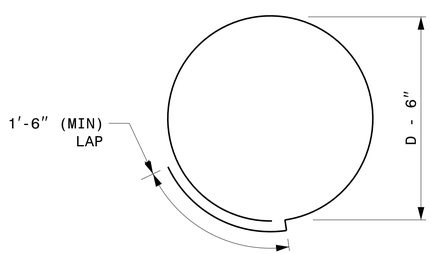

TYPICAL "C" BAR DETAIL

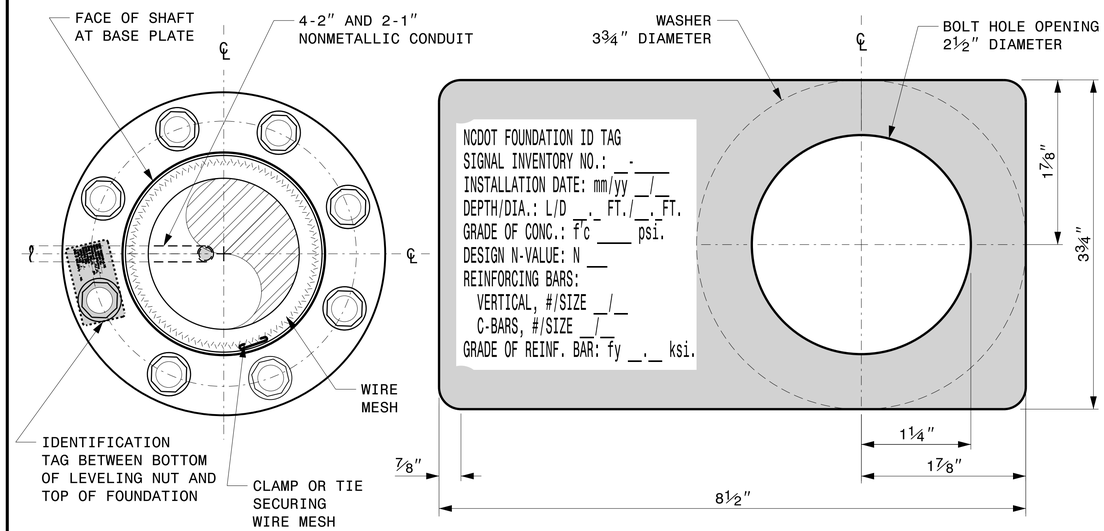

D = DIAMETER
L = LENGTH / DEPTH
mm = MONTH
yy = YEAR

DETAIL-A

CONCRETE FOUNDATION IDENTIFICATION TAG DETAILS

Prepared in the Offices of:
Transportation Mobility and Safety Division
Traffic Engineering Branch
Signal Design Section
750 N.Greenfield Pkwy.Garner,NC 27529

Construction Details For Foundations

PLAN DATE:	SEPTEMBER 2023	DESIGNED BY:	K.C. DURIGON
PREPARED BY:	K.C. DURIGON	REVIEWED BY:	D.C. SARKAR

REVISIONS	INIT.	DATE

SCALE: 0 NA — NONE

SEAL
NORTH CAROLINA PROFESSIONAL SEAL 036626 ENGINEER KEVIN C. DURIGON

DocuSigned by:
Kevin Durigon
SIGNATURE
4B23DC79B3784DA...
09/21/2023
DATE

03-OCT-2023 12:45
S:\TSSGU\413\Signals\Signal Design Section\Structures\Drawings\2024 Metal Pole Std Drawings for LRFD\2024 Sig.M7 Std. Construction Details-Strain Poles.dgn
kcdurigon

SOIL CONDITION

Case No.	Pole Height (Ft.)	Base Plate BC (In.)	Reactions at the Pole Base			Clay				Sand			Longitudinal		Stirrups	
			Axial (kip)	Shear (kip)	Moment (ft–kip)	Medium N–Value 4–8	Stiff N–Value 9–15	Very Stiff N–Value 16–30	Hard N–Value >30	Loose N–Value 4–10	Medium N–Value 11–30	Dense N–Value >30	Bar Size (#)	Quantity (ea.)	Bar Size (#)	Spacing (in.)
S26L1	26	22	2	9	210	19.5	12.5	9	6.5	15.5	14.5	13	8	12	4	12
S26L2	26	23	2	10	240	19.5	12	9	6.5	15.5	14.5	13	8	12	4	12
S26L3	26	25	2	11	260	20.5	12	10	8	16	15	13	8	12	4	12
S30L1	30	22	2	9	230	19	11	9	7	15.5	14	12.5	8	12	4	12
S30L2	30	23	2	10	270	20	12	10	8	16	14.5	13	8	12	4	12
S30L3	30	25	2	11	290	21	12	10	8	17	15	13.5	8	12	4	12
S30H1	30	25	3	13	355	23	13	11	9	18	16.5	14.5	8	12	4	12
S30H2	30	29	3	15	405	25	14	11	9	19	17.5	15.5	8	14	4	12
S30H3	30	29	3	16	430	26	15	12	9	20	18	16	8	14	4	6
S35L1	35	22	3	8	260	19.5	12	10	8	15.5	14.5	13	8	12	4	12
S35L2	35	23	3	10	300	21	12	10	8	16.5	15	13.5	8	12	4	12
S35L3	35	25	3	10	320	21.5	13	10	8	17	15.5	14	8	12	4	12
S35H1	35	25	3	12	390	23.5	14	11	9	18	17	15	8	14	4	12
S35H2	35	29	4	14	460	26	15	12	9	20	18	16	8	14	4	6
S35H3	35	29	4	16	495	28.5	15	13.5	10	21.5	19	17	8	14	4	6

STANDARD STRAIN POLES

STANDARD FOUNDATIONS
48″ Diameter Drilled Pier Length (L) – Feet

Reinforcement

48″ DIAMETER FOUNDATION CONCRETE VOLUME (CUBIC YARDS) = (0.465) x DRILLED PIER LENGTH

GENERAL NOTES:

1. VALUES SHOWN IN THE "REACTIONS AT THE POLE BASE" COLUMN REPRESENT THE MINIMUM ACCEPTABLE CAPACITY ALLOWED FOR DESIGN USING A COMBINED FORCE RATIO (CFR) OF 1.00.
2. USE CHAIRS AND SPACERS TO MAINTAIN PROPER CLEARANCE.
3. FOR FOUNDATION, ALWAYS USE AIR-ENTRAINED CONCRETE MIX.

FOUNDATION SELECTION:

1. PERFORM A STANDARD PENETRATION TEST AT EACH PROPOSED FOUNDATION SITE TO DETERMINE "N" VALUE.
2. SELECT THE APPROPRIATE WIND ZONE FROM M1 DRAWING.
3. SELECT THE SOIL TYPE (CLAY OR SAND) THAT BEST DESCRIBES THE SOIL CHARACTERISTICS.
4. GET THE APPROPRIATE STANDARD POLE CASE NUMBER FROM THE PLANS OR FROM THE ENGINEER.
5. SELECT THE APPROPRIATE COLUMN UNDER "STANDARD FOUNDATIONS" BASED ON SOIL TYPE AND "N" VALUE. SELECT THE APPROPRIATE ROW BASED ON THE POLE LOAD CASE.
6. THE FOUNDATION DEPTH IS THE VALUE SHOWN IN THE "STANDARD FOUNDATIONS" CATEGORY WHERE THE COLUMN AND THE ROW INTERSECT.
7. USE CONSTRUCTION PROCEDURES AND DESIGN METHODS PRESCRIBED BY FHWA-NHI-10-016 MANUAL FOR DRILLED SHAFTS.

PROJECT I.D. NO.	SHEET NO.
U-5302	Sig.M8

Standard Strain Pole Foundation – All Soil Conditions

Prepared in the Offices of:
Transportation Mobility and Safety Division
Signal Design Section
750 N.Greenfield Pkwy,Garner,NC 27529

SCALE 0 NA NONE

Standard Strain Pole Foundation for All Soil Conditions

PLAN DATE: SEPTEMBER 2023 DESIGNED BY: K.C. DURIGON
PREPARED BY: K.C. DURIGON REVIEWED BY: D.C. SARKAR

REVISIONS	INIT.	DATE

SEAL
NORTH CAROLINA PROFESSIONAL SEAL 036626 ENGINEER KEVIN C. DURIGON

DocuSigned by:
Kevin Durigon
SIGNATURE
4B23DC79B3784DA...
09/21/2023
DATE

03-OCT-2023 12:48
S:\NTISSCU\NTIS Signals\Signal Design Section\Structures\Drawings\2024 Metal Pole Std Drawings for LRFD\2024 Sig_M8 Std. Strain Pole Found.-Saturated Soil Condition.dgn
kcdurigon

PROJECT I.D. NO.	SHEET NO.
U-5302	Sig.M9

Fabrication Details – CCTV Camera Poles

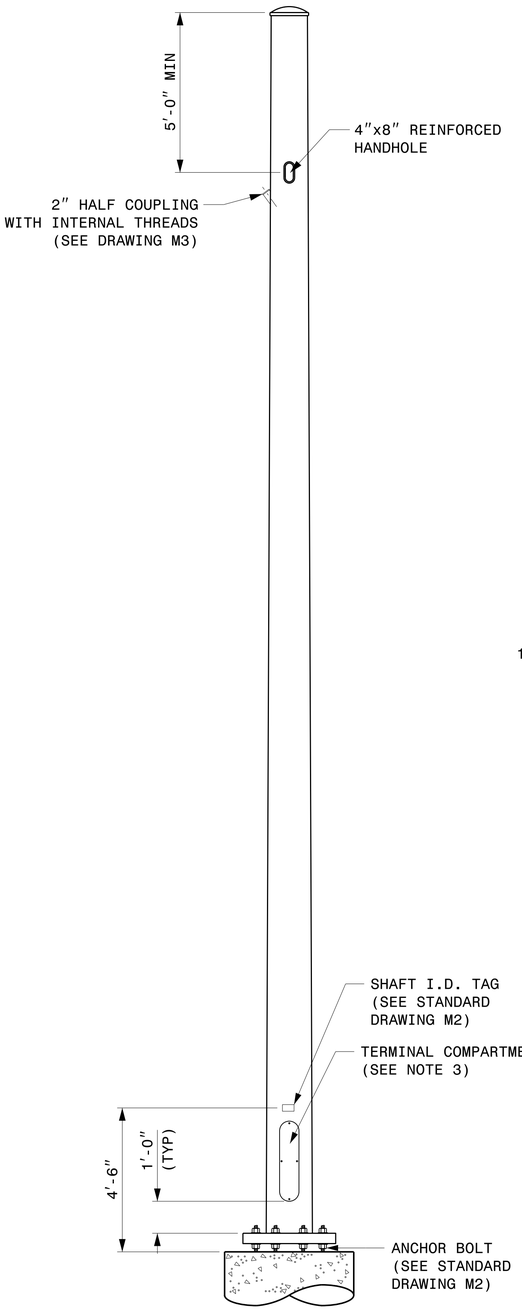

CCTV CAMERA POLE
(NOT TO SCALE)

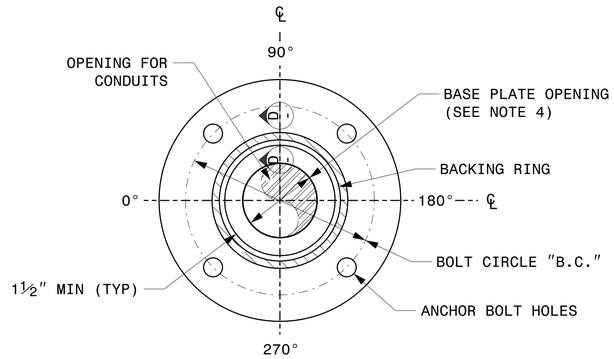

4 BOLT PATTERN
FOR POLES UP TO 40'

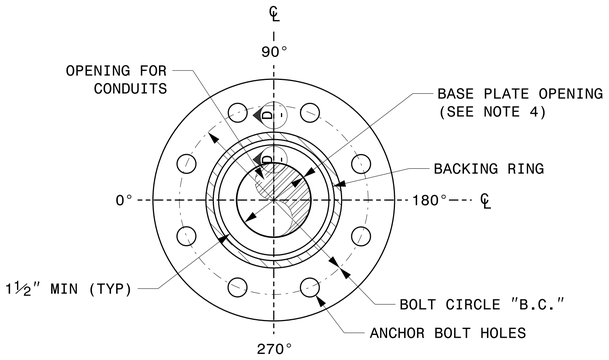

8 BOLT PATTERN
FOR POLES TALLER THAN 40'

BASE PLATE DETAILS

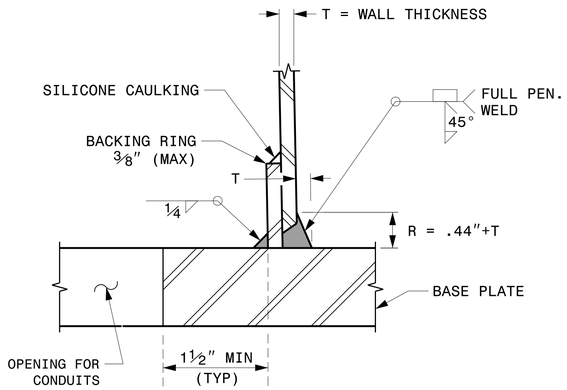

SECTION D-D
(POLE ATTACHMENT TO BASE PLATE)

FULL-PENETRATION
GROOVE WELD DETAIL

NOTES:

1. THIS DRAWING PROVIDES BASIC DETAILS FOR CCTV POLES. PROJECT REQUIREMENTS MAY REQUIRE SPECIAL FACTORY PREPS THAT ARE NOT SHOWN ON THESE DETAILS.
2. DETAILS FOR INTERNAL CAMERA LOWERING SYSTEMS ARE NOT SHOWN.
3. POLE MOUNTED CABINETS MAY REQUIRE MODIFICATIONS TO THE LOWER HANDHOLE OPENING TO MOUNT CABINETS. 4" X 8" REINFORCED HANDHOLES ARE ACCEPTABLE OPTIONS, AND MAY BE PREFERRED.
4. OPENING IN POLE BASE SHALL BE EQUAL TO POLE BASE INSIDE DIAMETER MINUS 3½" BUT SHALL NOT BE LESS THAN 8½".
5. USE COMPACT SECTION CRITERIA D/T RATIO PER AASHTO LTS-LRFD 1ST EDITION SECTION 5.7.2.

Prepared in the Offices of:
Transportation Mobility and Safety Division
Signal Design Section
750 N.Greenfield Pkwy.Garner,NC 27529

SCALE
0 NA
NONE

Typical Fabrication Details
For
CCTV Poles

PLAN DATE:	SEPTEMBER 2023	DESIGNED BY:	K.C. DURIGON
PREPARED BY:	K.C. DURIGON	REVIEWED BY:	C.F. ANDREWS

REVISIONS	INIT.	DATE

SEAL
NORTH CAROLINA PROFESSIONAL SEAL 036626 ENGINEER KEVIN C. DURIGON

DocuSigned by:
Kevin Durigon
SIGNATURE
4B23DC79B3784DA...
09/21/2023
DATE

03-OCT-2023 12:51
S:*ITS\SIG*ITS Signals*Signal Design Section*Structures*Drawings*2024 Metal Pole Std Drawings for LRFD*2024 Sig.M9 Fabrication Details - CCTV Poles.dgn
kcdurigon

Docusign Envelope ID: CCCD5626-C095-40CC-9C14-362554800AAD

PROJECT REFERENCE NO.	SHEET NO.
U-5302	SCP 1

1. INSTALL COAX CABLE
2. INSTALL ETHERNET CABLE
3. EXISTING ETHERNET (OR COAX) CABLE
4. INSTALL SMFO CABLE
5. EXISTING SMFO CABLE
6. INSTALL DROP CABLE ASSEMBLY
7. INSTALL TRACER WIRE
8. TRENCH
9. INSTALL PVC CONDUIT
10. INSTALL RIGID, GALVANIZED STEEL CONDUIT
11. INSTALL RIGID, GALVANIZED STEEL RISER WITH WEATHERHEAD
12. INSTALL RIGID, GALVANIZED STEEL RISER WITH FIBER OPTIC CABLE SEAL
13. INSTALL OUTER–DUCT POLYETHYLENE CONDUIT
14. INSTALL POLYETHYLENE CONDUIT
15. DIRECTIONAL DRILL CONDUIT
16. BORE AND JACK CONDUIT
17. INSTALL CABLE(S) IN EXISTING CONDUIT
18. INSTALL CABLE(S) IN NEW CONDUIT
19. INSTALL CABLE(S) IN EXISTING RISER
20. INSTALL CABLE(S) IN NEW RISER
21. INSTALL CABLE(S) IN EXISTING CONDUIT STUB–OUTS
22. INSTALL NEW CONDUIT INTO EXISTING CABINET BASE (USE EXISTING CONDUIT STUB–OUTS WHEN AVAILABLE)
23. INSTALL NEW RISER INTO EXISTING CABINET BASE (USE EXISTING CONDUIT STUB–OUTS WHEN AVAILABLE)
24. INSTALL NEW CONDUIT INTO EXISTING POLE MOUNTED CABINET
25. INSTALL NEW RISER INTO EXISTING POLE MOUNTED CABINET
26. INSTALL NEW ETHERNET EDGE SWITCH
27. INSTALL NEW FIBER OPTIC TRANSCEIVER
28. INSTALL INTERCONNECT CENTER, PATCH PANEL, JUMPERS AND FUSION SPLICE CABLE IN CABINET
29. INSTALL UNDERGROUND SPLICE ENCLOSURE
30. INSTALL AERIAL SPLICE ENCLOSURE
31. MODIFY EXISTING INTERCONNECT CENTER /SPLICE ENCLOSURE
32. INSTALL POLE MOUNTED SPLICE CABINET
33. INSTALL BASE MOUNTED SPLICE CABINET
34. INSTALL CABINET FOUNDATION
35. INSTALL CCTV CAMERA POLE MOUNTED CABINET
36. INSTALL CCTV CAMERA ASSEMBLY
37. INSTALL CCTV CAMERA WOOD POLE
38. INSTALL CCTV CAMERA METAL POLE AND FOUNDATION
39. INSTALL JUNCTION BOX
40A. INSTALL OVERSIZED JUNCTION BOX
40B. INSTALL SPECIAL OVERSIZED JUNCTION BOX (36″ x 24″ x 24″)
41. REMOVE EXISTING JUNCTION BOX
42. INSTALL WOOD POLE
43. REMOVE EXISTING WOOD POLE
44. INSTALL AERIAL GUY ASSEMBLY
45. INSTALL STANDARD GUY ASSEMBLY
46. INSTALL SIDEWALK GUY ASSEMBLY
47. INSTALL MESSENGER CABLE
48A. REMOVE EXISTING COMMUNICATIONS AND MESSENGER CABLE
48B. REMOVE EXISTING COMMUNICATIONS CABLE
49. BACK PULL EXISTING COMMUNICATIONS CABLE
50. INSTALL CELL MODEM AND ANTENNA
51. INSTALL CABLE STORAGE RACKS (SNOW SHOES) AND STORE 100 FEET OF CABLE
52. INSTALL DELINEATOR MARKER
53A. STORE 30 FEET OF COMMUNICATIONS CABLE
53B. STORE 50 FEET OF EACH COMMUNICATIONS CABLE
54. LASH CABLE(S) TO EXISTING COMMUNICATIONS CABLE
55. LASH CABLE(S) TO EXISTING MESSENGER CABLE
56. LASH CABLE(S) TO NEW MESSENGER CABLE
57. MODIFY EXISTING ELECTRICAL SERVICE
58. INSTALL NEW ELECTRICAL SERVICE
59. INSTALL NEW EQUIPMENT CABINET DISCONNECT
60. BOND TRACER WIRE TO EQUIPMENT GROUND BUS
61. DO NOT BOND TRACER WIRE TO EQUIPMENT GROUND BUS
62. BOND RISER AND MESSENGER CABLE TO POLE GROUND
63. BOND RISER TO POLE GROUND
64. BOND MESSENGER CABLE TO POLE GROUND
65. INSTALL HEAT SHRINK TUBING RETROFIT KIT
66. INSTALL MOLDABLE DUCT SEAL
67. SLACK SPAN

LEGEND

- FO — NEW FIBER OPTIC COMMUNICATIONS CABLE
- TWIST PR — NEW TWISTED PAIR COMMUNICATIONS CABLE
- EXI — EXISTING COMMUNICATIONS CABLE
- REM — EXISTING COMMUNICATIONS CABLE TO BE REMOVED
- NEW AERIAL GUY ASSEMBLY
- NEW CONDUIT
- EXISTING CONDUIT
- DD — NEW DIRECTIONAL DRILLED CONDUIT
- B&J — NEW BORED AND JACKED CONDUIT
- NEW JUNCTION BOX
- EXISTING JUNCTION BOX
- NEW WOOD POLE
- EXISTING WOOD POLE
- AERIAL SPLICE ENCLOSURE
- EXISTING AERIAL SPLICE ENCLOSURE
- UNDERGROUND SPLICE ENCLOSURE
- NEW METAL POLE
- EXISTING METAL POLE
- NEW CCTV ASSEMBLY
- EXISTING CCTV ASSEMBLY
- NEW STANDARD GUY ASSEMBLY
- NEW SIDEWALK GUY ASSEMBLY
- CITY OF RALEIGH COR IT CABLE STORAGE RACK
- CITY OF RALEIGH COR IT EXISTING CABLE STORAGE RACK
- NEW CABLE STORAGE RACKS (SNOW SHOES)
- EXISTING CABLE STORAGE RACK (SNOW SHOE)
- EXISTING CONTROLLER AND CABINET
- NEW CCTV CABINET
- EXISTING SPLICE CABINET
- NEW SPLICE CABINET
- SP — SIGNAL POLE
- FLAT PANEL ANTENNA (SINGLE)
- YAGI ANTENNA (DOUBLE) FOR REPEATER OPERATION
- YAGI ANTENNA (SINGLE)
- OMNI ANTENNA
- CITY OF RALEIGH COR AERIAL SPLICE ENCLOSURE
- CITY OF RALEIGH COR EXISTING AERIAL SPLICE ENCLOSURE
- XX–XXXX — SIGNAL INVENTORY NUMBER

CONSTRUCTION NOTE SYMBOLOGY KEY

- (XX) INDICATES NUMBER OF CABLES, LOOPS, ETC.
- [XX] INDICATES NUMBER OF FIBERS PER CABLE, TWISTED PAIRS PER CABLE, ETC.
- <XX INDICATES NUMBER OF RISER(S)/CONDUIT(S)
- XX> INDICATES DIAMETER OF RISER(S)/CONDUIT(S) (INCH)

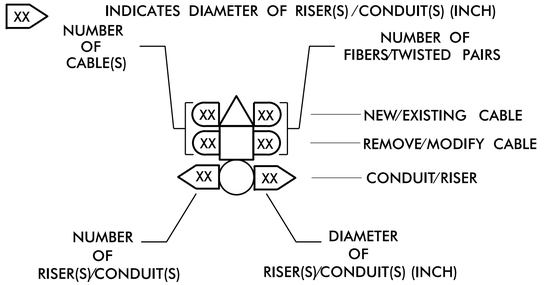

ATTACHMENT POINT:

"SS" REFERENCE LOCATION
FS = FRONT SIDE OF POLE
BS = BACK SIDE OF POLE

- XX″/SS / YYY — DISTANCE ABOVE (IN)/ATTACHMENT POINT REFERENCE POINT
- YYY / XX″/SS — REFERENCE POINT DISTANCE BELOW (IN)/ATTACHMENT POINT

DOCUMENT NOT CONSIDERED FINAL UNLESS ALL SIGNATURES COMPLETED

AECOM
NC Firm License No.: F-0342
5438 Wade Park Boulevard
Suite 200 Raleigh, NC 27607
Phone: 919-461-1100

Prepared for the Offices of:
750 N. Greenfield Pkwy., Garner, NC 27529

Construction Notes

Division 5 Wake County Raleigh

PLAN DATE:	March 2025	PREPARED BY:	M.D. Tindal
PREPARED BY:	M.P. Cavenaugh	REVIEWED BY:	C.L. Kalencik

REVISIONS	INIT.	DATE

SEAL
NORTH CAROLINA PROFESSIONAL SEAL 040715 ENGINEER COURTNEY L KALENCIK

DocuSigned by: Courtney L Kalencik 3/27/2025
SIGNATURE DATE

3/27/2025
pw://aecom-no-pw.bentley.com:AECOM_USA_North_Carolina\Documents\60488049-u-5302\900-CAD GIS\910_CAD\70_NCDOT_TIP\Traffic\Signals\Design\Signals\Signals\Signal Comm_2025\Post-Let\u5302_scp_psh_01.dgn
TindalM

Docusign Envelope ID: CCCD5626-C095-40CC-9C14-362554800AAD

PROJECT REFERENCE NO.	SHEET NO.
U-5302	SCP 2

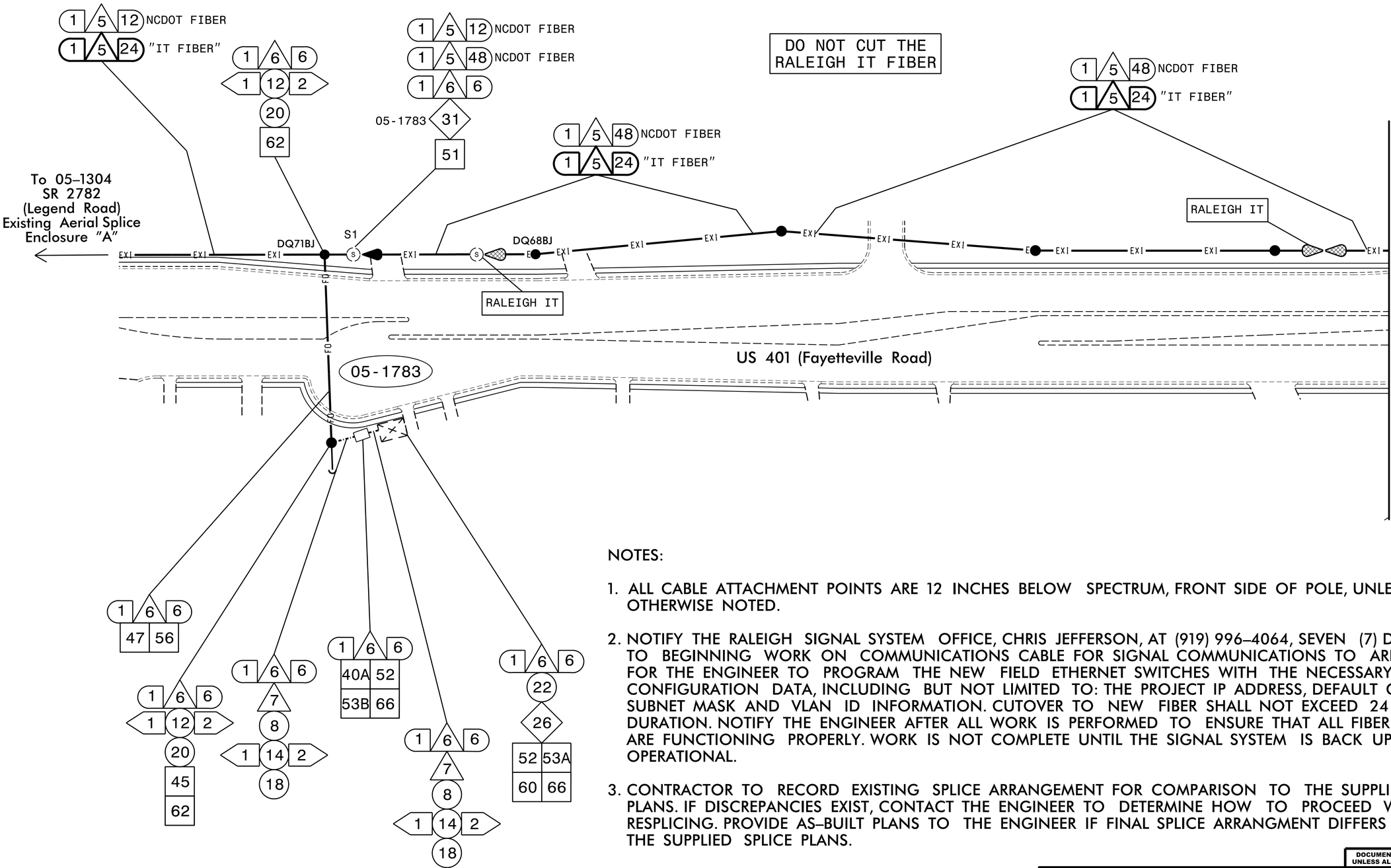

NOTES:

1. ALL CABLE ATTACHMENT POINTS ARE 12 INCHES BELOW SPECTRUM, FRONT SIDE OF POLE, UNLESS OTHERWISE NOTED.

2. NOTIFY THE RALEIGH SIGNAL SYSTEM OFFICE, CHRIS JEFFERSON, AT (919) 996-4064, SEVEN (7) DAYS PRIOR TO BEGINNING WORK ON COMMUNICATIONS CABLE FOR SIGNAL COMMUNICATIONS TO ARRANGE FOR THE ENGINEER TO PROGRAM THE NEW FIELD ETHERNET SWITCHES WITH THE NECESSARY NETWORK CONFIGURATION DATA, INCLUDING BUT NOT LIMITED TO: THE PROJECT IP ADDRESS, DEFAULT GATEWAY, SUBNET MASK AND VLAN ID INFORMATION. CUTOVER TO NEW FIBER SHALL NOT EXCEED 24 HOURS IN DURATION. NOTIFY THE ENGINEER AFTER ALL WORK IS PERFORMED TO ENSURE THAT ALL FIBER CIRCUITS ARE FUNCTIONING PROPERLY. WORK IS NOT COMPLETE UNTIL THE SIGNAL SYSTEM IS BACK UP AND OPERATIONAL.

3. CONTRACTOR TO RECORD EXISTING SPLICE ARRANGEMENT FOR COMPARISON TO THE SUPPLIED SPLICE PLANS. IF DISCREPANCIES EXIST, CONTACT THE ENGINEER TO DETERMINE HOW TO PROCEED WITH RESPLICING. PROVIDE AS-BUILT PLANS TO THE ENGINEER IF FINAL SPLICE ARRANGMENT DIFFERS FROM THE SUPPLIED SPLICE PLANS.

DOCUMENT NOT CONSIDERED FINAL UNLESS ALL SIGNATURES COMPLETED

AECOM
NC Firm License No.: F-0342
5438 Wade Park Boulevard
Suite 200 Raleigh, NC 27607
Phone: 919-461-1100

Prepared for the Offices of:
750 N. Greenfield Pkwy., Garner, NC 27529

Post-Let
Communication Cable Routing Plans
Signal System - City of Raleigh

Division 5 Wake County Raleigh

PLAN DATE:	March 2025	PREPARED BY:	M.D. Tindal
PREPARED BY:	M.P. Cavenaugh	REVIEWED BY:	C.L. Kalencik

SCALE 0 50 1"=50'

REVISIONS	INIT.	DATE

SEAL
NORTH CAROLINA PROFESSIONAL SEAL 040715 ENGINEER COURTNEY L. KALENCIK

DocuSigned by: Courtney L. Kalencik 3/27/2025
SIGNATURE DATE
CADD Filename:

3/27/2025
pw:\\aecom-na-pw.bentley.com:AECOM_USA_North_Carolina\Documents\60488049-U-5302\900-CAD GIS\910_CAD\70_NCDOT_TIP\Traffic\Signals\Design\Signals\Signal Comm_2025\Post-Let\u5302_scp_psh_02_POST.dgn
TindalM

Docusign Envelope ID: CCCD5626-C095-40CC-9C14-362554800AAD

PROJECT REFERENCE NO.	SHEET NO.
U-5302	SCP 3

DO NOT CUT THE RALEIGH IT FIBER

Matchline –L– STA 51+00 See Sheet 2

Matchline –L– STA 64+00 See Sheet 4

Matchline –Y3– STA 12+00 See Sheet 7

SR 1374 (Farm Road)

SR 1006 (Old Stage Road)

SR 2797 (Maxwell Drive)

US 401 (Fayetteville Road)

05-1784

05-0583

05-1785

05-1811

EXISTING CABINET TO BE REMOVED.

1 5 48 NCDOT FIBER
1 5 24 "IT FIBER"

41 SEE NOTE 3

1 49 6

1 5 6 / 22 / 26 / 53A 60 / 66

1 6 6 / 22 / 26 / 53A 60 / 66

2 6 6 / 2 12 2 / 20 / 62

2 6 6 / 1 12 2 / 20 / 62

2 6 6 / 7 / 8 / 2 14 2 / 18

2 6 6 / 40A 52 / 53B 66

1 6 6 / 7 / 8 / 1 14 2 / 18

1 5 6 / 7 / 8 / 1 14 2 / 18

1 5 6 / 1 6 6 / 40A 52 / 53B 66

1 5 6 / 1 6 6 / 7 / 8 / 2 14 2 / 18

3 5 48 NCDOT FIBER
1 5 6
1 6 6
05-0583 31
1 49 6
51

1 5 6 / 2 6 6 / 30 05-1811

NOTES:

1. ALL CABLE ATTACHMENT POINTS ARE 12 INCHES BELOW SPECTRUM, FRONT SIDE OF POLE, UNLESS OTHERWISE NOTED.

2. NOTIFY THE RALEIGH SIGNAL SYSTEM OFFICE, CHRIS JEFFERSON, AT (919) 996–4064, SEVEN (7) DAYS PRIOR TO BEGINNING WORK ON COMMUNICATIONS CABLE FOR SIGNAL COMMUNICATIONS TO ARRANGE FOR THE ENGINEER TO PROGRAM THE NEW FIELD ETHERNET SWITCHES WITH THE NECESSARY NETWORK CONFIGURATION DATA, INCLUDING BUT NOT LIMITED TO: THE PROJECT IP ADDRESS, DEFAULT GATEWAY, SUBNET MASK AND VLAN ID INFORMATION. CUTOVER TO NEW FIBER SHALL NOT EXCEED 24 HOURS IN DURATION. NOTIFY THE ENGINEER AFTER ALL WORK IS PERFORMED TO ENSURE THAT ALL FIBER CIRCUITS ARE FUNCTIONING PROPERLY. WORK IS NOT COMPLETE UNTIL THE SIGNAL SYSTEM IS BACK UP AND OPERATIONAL.

3. UPON REMOVAL OF EXISTING FIBER, REMOVE EXISTING JUNCTION BOXES AND BACKFILL WITH APPROVED MATERIAL. ABANDON UNUSED CONDUITS IN PLACE.

DOCUMENT NOT CONSIDERED FINAL UNLESS ALL SIGNATURES COMPLETED

AECOM
NC Firm License No.: F-0342
5438 Wade Park Boulevard
Suite 200 Raleigh, NC 27607
Phone: 919-461-1100

Prepared for the Offices of: NCDOT Traffic Engineering Branch

250 N. Greenfield Pkwy., Garner, NC 27529

Post-Let
Communication Cable Routing Plans
Signal System - City of Raleigh

Division 5 Wake County Raleigh

PLAN DATE:	March 2025	PREPARED BY:	M.D. Tindal
PREPARED BY:	M.P. Cavenaugh	REVIEWED BY:	C.L. Kalencik

SCALE 0 50 1"=50'

REVISIONS	INIT.	DATE

SEAL
NORTH CAROLINA PROFESSIONAL SEAL 040715 ENGINEER COURTNEY L. KALENCIK

DocuSigned by: Courtney L Kalencik 3/27/2025
SIGNATURE DATE

CADD Filename:

3/27/2025
Date Plotted
M.D. Tindal
Plotted By
P:\Projects\AECOM_USA_North_Carolina\Documents\60488048-U-5302\900-CAD GIS\910_CAD\70_NCDOT_TIP\Traffic\Signals\Designs\Signals\Signal Comm_2025\Post-Let\U5302_scp_psh_03_POST.dgn
Plot Scale: 1.000 '/ Inch
Plot Group: Plot Set
Plot Offset (X,Y): -0.00, -0.00
Plot Date: 3/27/2025
Plotted By: Tindal M

Docusign Envelope ID: CCCD5626-C095-40CC-9C14-362554800AAD

PROJECT REFERENCE NO.	SHEET NO.
U-5302	SCP 4

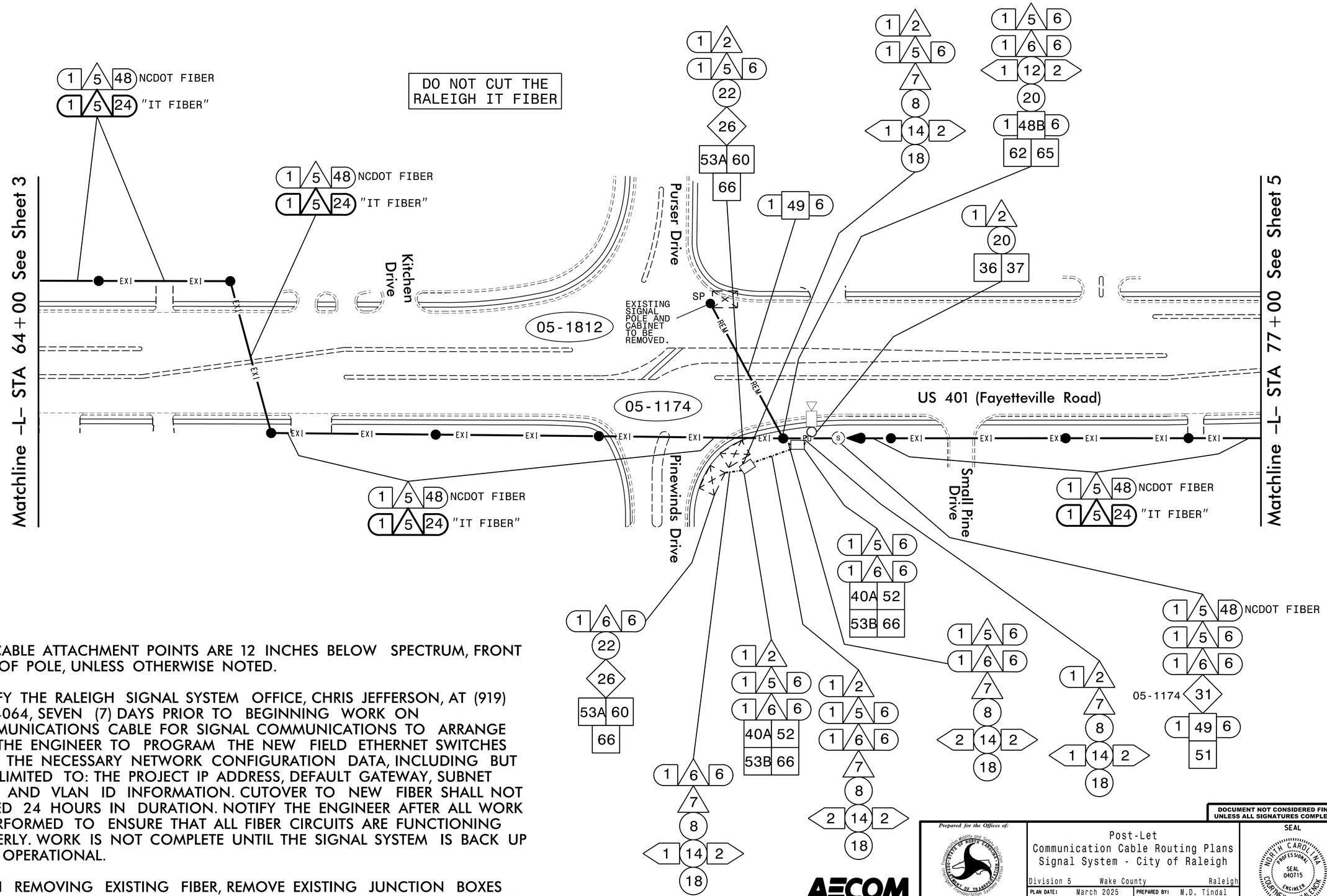

NOTES:

1. ALL CABLE ATTACHMENT POINTS ARE 12 INCHES BELOW SPECTRUM, FRONT SIDE OF POLE, UNLESS OTHERWISE NOTED.

2. NOTIFY THE RALEIGH SIGNAL SYSTEM OFFICE, CHRIS JEFFERSON, AT (919) 996-4064, SEVEN (7) DAYS PRIOR TO BEGINNING WORK ON COMMUNICATIONS CABLE FOR SIGNAL COMMUNICATIONS TO ARRANGE FOR THE ENGINEER TO PROGRAM THE NEW FIELD ETHERNET SWITCHES WITH THE NECESSARY NETWORK CONFIGURATION DATA, INCLUDING BUT NOT LIMITED TO: THE PROJECT IP ADDRESS, DEFAULT GATEWAY, SUBNET MASK AND VLAN ID INFORMATION. CUTOVER TO NEW FIBER SHALL NOT EXCEED 24 HOURS IN DURATION. NOTIFY THE ENGINEER AFTER ALL WORK IS PERFORMED TO ENSURE THAT ALL FIBER CIRCUITS ARE FUNCTIONING PROPERLY. WORK IS NOT COMPLETE UNTIL THE SIGNAL SYSTEM IS BACK UP AND OPERATIONAL.

3. UPON REMOVING EXISTING FIBER, REMOVE EXISTING JUNCTION BOXES AND BACKFILL WITH APPROVED MATERIALS. ABANDON UNUSED CONDUITS IN PLACE.

AECOM
NC Firm License No.: F-0342
5438 Wade Park Boulevard
Suite 200 Raleigh, NC 27607
Phone: 919-461-1100

DOCUMENT NOT CONSIDERED FINAL UNLESS ALL SIGNATURES COMPLETED

Prepared for the Offices of:
750 N. Greenfield Pkwy., Garner, NC 27529

Post-Let
Communication Cable Routing Plans
Signal System - City of Raleigh

Division 5 Wake County Raleigh

PLAN DATE:	March 2025	PREPARED BY:	M.D. Tindal
PREPARED BY:	M.P. Cavenaugh	REVIEWED BY:	C.L. Kalencik

REVISIONS	INIT.	DATE

SCALE 0 50 1"=50'

SEAL
NORTH CAROLINA PROFESSIONAL SEAL 040715 ENGINEER COURTNEY L. KALENCIK

DocuSigned by: Courtney L. Kalencik 3/27/2025
SIGNATURE DATE
CADD Filename:

3/27/2025
pw:\\aecom-na-pw.bentley.com:AECOM_USA_North_Carolina\Documents\60488049-U-5302\900-CAD GIS\910_CAD\70_NCDOT_TIP\Traffic\Signals\Design\Signals\Signal Comm_2025\Post-Let\u5302_scp_psh_04_POST.dgn
TindalM

Docusign Envelope ID: CCCD5626-C095-40CC-9C14-362554800AAD

PROJECT REFERENCE NO.	SHEET NO.
U-5302	SCP 5

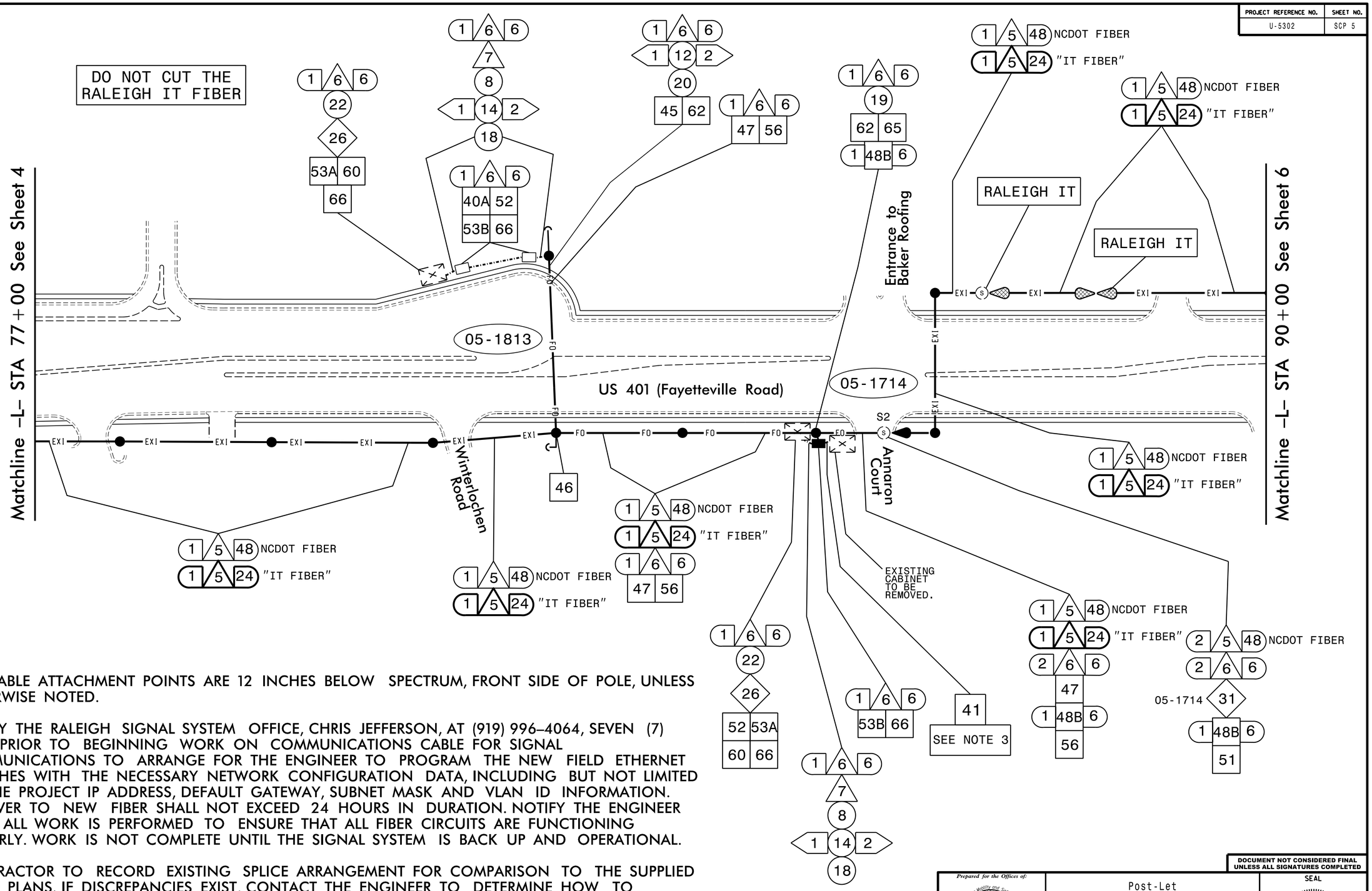

NOTES:

1. ALL CABLE ATTACHMENT POINTS ARE 12 INCHES BELOW SPECTRUM, FRONT SIDE OF POLE, UNLESS OTHERWISE NOTED.

2. NOTIFY THE RALEIGH SIGNAL SYSTEM OFFICE, CHRIS JEFFERSON, AT (919) 996–4064, SEVEN (7) DAYS PRIOR TO BEGINNING WORK ON COMMUNICATIONS CABLE FOR SIGNAL COMMUNICATIONS TO ARRANGE FOR THE ENGINEER TO PROGRAM THE NEW FIELD ETHERNET SWITCHES WITH THE NECESSARY NETWORK CONFIGURATION DATA, INCLUDING BUT NOT LIMITED TO: THE PROJECT IP ADDRESS, DEFAULT GATEWAY, SUBNET MASK AND VLAN ID INFORMATION. CUTOVER TO NEW FIBER SHALL NOT EXCEED 24 HOURS IN DURATION. NOTIFY THE ENGINEER AFTER ALL WORK IS PERFORMED TO ENSURE THAT ALL FIBER CIRCUITS ARE FUNCTIONING PROPERLY. WORK IS NOT COMPLETE UNTIL THE SIGNAL SYSTEM IS BACK UP AND OPERATIONAL.

3. CONTRACTOR TO RECORD EXISTING SPLICE ARRANGEMENT FOR COMPARISON TO THE SUPPLIED SPLICE PLANS. IF DISCREPANCIES EXIST, CONTACT THE ENGINEER TO DETERMINE HOW TO PROCEED WITH RESPLICING. PROVIDE AS–BUILT PLANS TO THE ENGINEER IF FINAL SPLICE ARRANGMENT DIFFERS FROM THE SUPPLIED SPLICE PLANS.

AECOM
NC Firm License No.: F-0342
5438 Wade Park Boulevard
Suite 200 Raleigh, NC 27607
Phone: 919-461-1100

DOCUMENT NOT CONSIDERED FINAL UNLESS ALL SIGNATURES COMPLETED

Prepared for the Offices of:
NORTH CAROLINA DEPARTMENT OF TRANSPORTATION
Transportation Mobility and Coordination
Integrated Mobility Division
Traffic Engineering Branch
750 N. Greenfield Pkwy., Garner, NC 27529

Post-Let
Communication Cable Routing Plans
Signal System - City of Raleigh

Division 5 Wake County Raleigh

PLAN DATE:	March 2025	PREPARED BY:	M.D. Tindal
PREPARED BY:	M.P. Cavenaugh	REVIEWED BY:	C.L. Kalencik

SCALE 0 50 1"=50'

REVISIONS	INIT.	DATE

SEAL
NORTH CAROLINA PROFESSIONAL SEAL 040715 ENGINEER COURTNEY L. KALENCIK

DocuSigned by: Courtney L Kalencik 3/27/2025
SIGNATURE DATE

CADD Filename:

3/27/2025
pw://aecom-no-pw.bentley.com:AECOM_USA_North_Carolina\Documents\60488049-u-5302\900-CAD GIS\910_CAD\70_NCDOT_TIP\Traffic\Signals\Design\Signals\Signals\Post-Let\u5302_scp_psh_05_POST.dgn
Tindalm

Docusign Envelope ID: CCCD5626-C095-40CC-9C14-362554800AAD

PROJECT REFERENCE NO.	SHEET NO.
U-5302	SCP 6

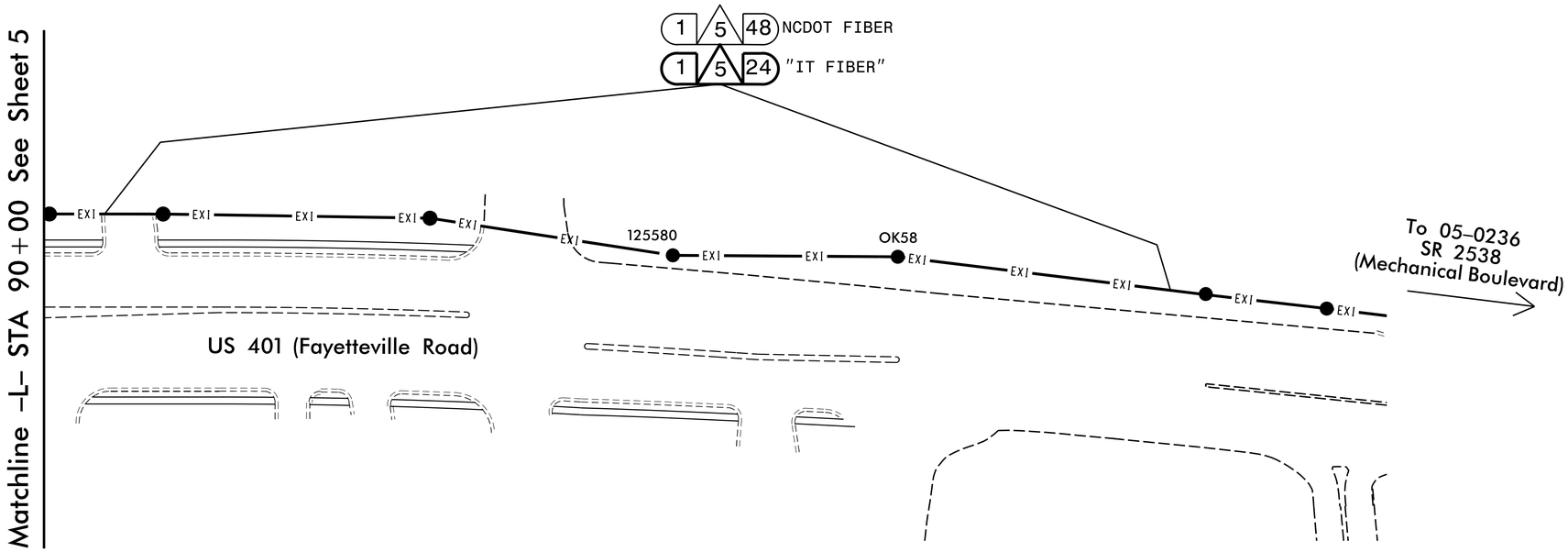

NOTES:

1. ALL CABLE ATTACHMENT POINTS ARE 12 INCHES BELOW SPECTRUM, FRONT SIDE OF POLE, UNLESS OTHERWISE NOTED.

2. NOTIFY THE RALEIGH SIGNAL SYSTEM OFFICE, CHRIS JEFFERSON, AT (919) 996–4064, SEVEN (7) DAYS PRIOR TO BEGINNING WORK ON COMMUNICATIONS CABLE FOR SIGNAL COMMUNICATIONS TO ARRANGE FOR THE ENGINEER TO PROGRAM THE NEW FIELD ETHERNET SWITCHES WITH THE NECESSARY NETWORK CONFIGURATION DATA, INCLUDING BUT NOT LIMITED TO: THE PROJECT IP ADDRESS, DEFAULT GATEWAY, SUBNET MASK AND VLAN ID INFORMATION. CUTOVER TO NEW FIBER SHALL NOT EXCEED 24 HOURS IN DURATION. NOTIFY THE ENGINEER AFTER ALL WORK IS PERFORMED TO ENSURE THAT ALL FIBER CIRCUITS ARE FUNCTIONING PROPERLY. WORK IS NOT COMPLETE UNTIL THE SIGNAL SYSTEM IS BACK UP AND OPERATIONAL.

3. CONTRACTOR TO RECORD EXISTING SPLICE ARRANGEMENT FOR COMPARISON TO THE SUPPLIED SPLICE PLANS. IF DISCREPANCIES EXIST, CONTACT THE ENGINEER TO DETERMINE HOW TO PROCEED WITH RESPLICING. PROVIDE AS–BUILT PLANS TO THE ENGINEER IF FINAL SPLICE ARRANGMENT DIFFERS FROM THE SUPPLIED SPLICE PLANS.

AECOM
NC Firm License No.: F-0342
5438 Wade Park Boulevard
Suite 200 Raleigh, NC 27607
Phone: 919-461-1100

DOCUMENT NOT CONSIDERED FINAL UNLESS ALL SIGNATURES COMPLETED

Prepared for the Offices of:
Transportation Mobility and Safety Division
NORTH CAROLINA DEPARTMENT OF TRANSPORTATION
Integrated Mobility Division
Transportation Systems Section
750 N. Greenfield Pkwy., Garner, NC 27529

Post-Let
Communication Cable Routing Plans
Signal System - City of Raleigh

Division 5 Wake County Raleigh

PLAN DATE:	March 2025	PREPARED BY:	M.D. Tindal
PREPARED BY:	M.P. Cavenaugh	REVIEWED BY:	C.L. Kalencik

SCALE 0 50 1"=50'

REVISIONS	INIT.	DATE

SEAL
NORTH CAROLINA PROFESSIONAL ENGINEER SEAL 040715 COURTNEY L. KALENCIK

DocuSigned by: Courtney L Kalencik 3/27/2025
SIGNATURE DATE

CADD Filename:

3/27/2025
DWG:\\AECOM-na-pw.bentley.com:AECOM_USA.North_Carolina\Documents\60488049-U-5302\900-CAD GIS\910_CAD\70_NCDOT_TIP\Traffic\Signals\Design\Signals\Signal Comm_2025\Post-Let\U5302_scp_psh_06_POST.dgn
Tindal M

Docusign Envelope ID: CCCD5626-C095-40CC-9C14-362554800AAD

PROJECT REFERENCE NO.	SHEET NO.
U-5302	SCP 7

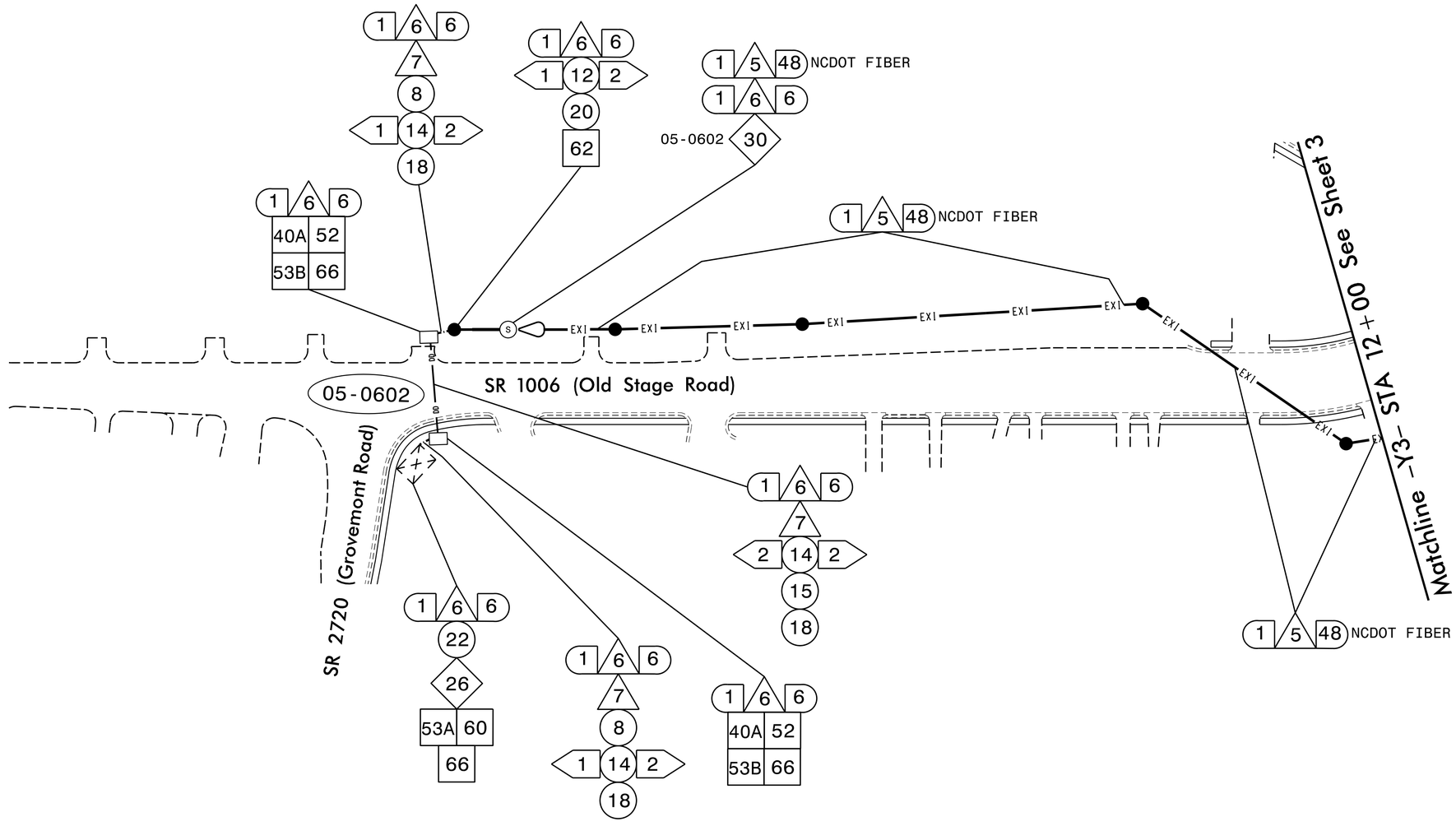

NOTES:

1. ALL CABLE ATTACHMENT POINTS ARE 12 INCHES BELOW SPECTRUM, FRONT SIDE OF POLE, UNLESS OTHERWISE NOTED.

2. NOTIFY THE RALEIGH SIGNAL SYSTEM OFFICE, CHRIS JEFFERSON, AT (919) 996–4064, SEVEN (7) DAYS PRIOR TO BEGINNING WORK ON COMMUNICATIONS CABLE FOR SIGNAL COMMUNICATIONS TO ARRANGE FOR THE ENGINEER TO PROGRAM THE NEW FIELD ETHERNET SWITCHES WITH THE NECESSARY NETWORK CONFIGURATION DATA, INCLUDING BUT NOT LIMITED TO: THE PROJECT IP ADDRESS, DEFAULT GATEWAY, SUBNET MASK AND VLAN ID INFORMATION. CUTOVER TO NEW FIBER SHALL NOT EXCEED 24 HOURS IN DURATION. NOTIFY THE ENGINEER AFTER ALL WORK IS PERFORMED TO ENSURE THAT ALL FIBER CIRCUITS ARE FUNCTIONING PROPERLY. WORK IS NOT COMPLETE UNTIL THE SIGNAL SYSTEM IS BACK UP AND OPERATIONAL.

AECOM
NC Firm License No.: F-0342
5438 Wade Park Boulevard
Suite 200 Raleigh, NC 27607
Phone: 919-461-1100

DOCUMENT NOT CONSIDERED FINAL UNLESS ALL SIGNATURES COMPLETED

Prepared for the Offices of:
Transportation Mobility and Safety Division
STATE OF NORTH CAROLINA
DEPARTMENT OF TRANSPORTATION
Intelligent Transportation Systems Section
750 N. Greenfield Pkwy., Garner, NC 27529

Post-Let
Communication Cable Routing Plans
Signal System - City of Raleigh

Division 5 Wake County Raleigh

PLAN DATE:	March 2025	PREPARED BY:	M.D. Tindal
PREPARED BY:	M.P. Cavenaugh	REVIEWED BY:	C.L. Kalencik

SCALE 0 50 1"=50'

REVISIONS	INIT.	DATE

SEAL
NORTH CAROLINA PROFESSIONAL SEAL 040715 ENGINEER COURTNEY L. KALENCIK

DocuSigned by:
Courtney L. Kalencik 3/27/2025
SIGNATURE DATE
CADD Filename:

3/27/2025
pw:\\aecom-na-pw.bentley.com:AECOM_USA_North_Carolina\Documents\60488049-U-5302\900-CAD GIS\910_CAD\70_NCDOT_TIP\Traffic\Signals\Design\Signals\Signal Comm_2025\Post-Let\u5302_scp_psh_07_POST.dgn
TindalM

Docusign Envelope ID: CCCD5626-C095-40CC-9C14-362554800AAD

PROJECT REFERENCE NO.	SHEET NO.
U-5302	SCP 8

EXISTING AERIAL SPLICE ENCLOSURE S1
US 401 (FAYETTEVILLE ROAD) SOUTH OF
SR 1006 (OLD STAGE RD)/SR 1374 (FARM RD)
SIG. INV. # 05–1783

LEGEND

COLOR CODE TIA/EIA 598–A	
(1) BLUE	(7) RED
(2) ORANGE	(8) BLACK
(3) GREEN	(9) YELLOW
(4) BROWN	(10) VIOLET
(5) SLATE	(11) ROSE
(6) WHITE	(12) AQUA

X = NEW FUSION SPLICE INDIVIDUAL FIBER
C = CAP, COIL, AND SEAL

Notes:
Unused fibers left coiled and stored in splice tray.
Unused Buffer Tubes left coiled and stored in splice tray.

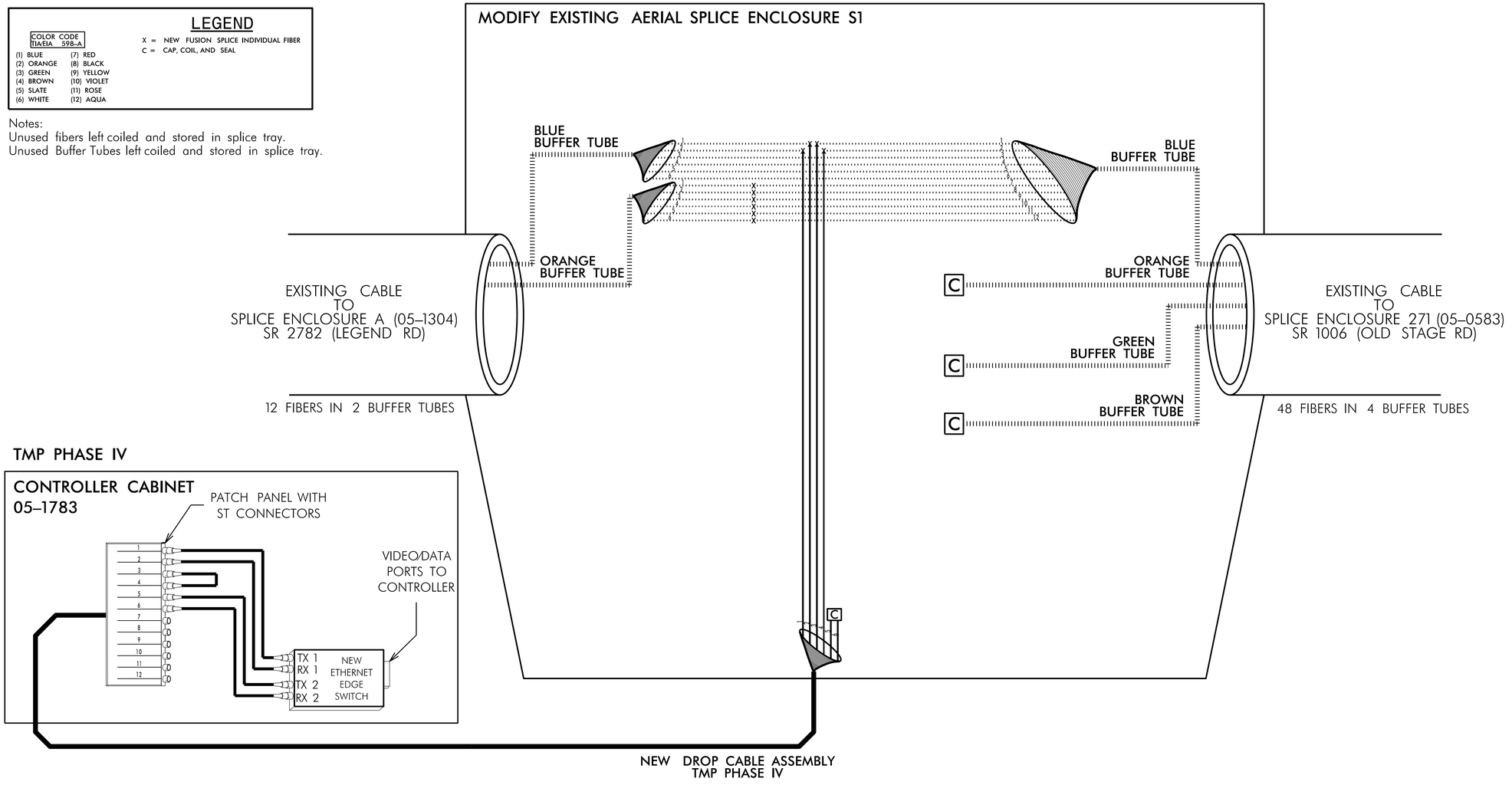

1. NOTIFY THE RALEIGH SIGNAL SYSTEM OFFICE, CHRIS JEFFERSON, AT (919) 996–4064, SEVEN (7) DAYS PRIOR TO BEGINNING WORK ON COMMUNICATIONS CABLE FOR SIGNAL COMMUNICATIONS TO ARRANGE FOR THE ENGINEER TO PROGRAM THE NEW FIELD ETHERNET SWITCHES WITH THE NECESSARY NETWORK CONFIGURATION DATA, INCLUDING BUT NOT LIMITED TO: THE PROJECT IP ADDRESS, DEFAULT GATEWAY, SUBNET MASK AND VLAN ID INFORMATION. CUTOVER TO NEW FIBER SHALL NOT EXCEED 24 HOURS IN DURATION. NOTIFY THE ENGINEER AFTER ALL WORK IS PERFORMED TO ENSURE THAT ALL FIBER CIRCUITS ARE FUNCTIONING PROPERLY. WORK IS NOT COMPLETE UNTIL THE SIGNAL SYSTEM IS BACK UP AND OPERATIONAL.

2. CONTRACTOR TO RECORD EXISTING SPLICE ARRANGEMENT FOR COMPARISON TO THE SUPPLIED SPLICE DETAILS. IF DISCREPANCIES EXIST, CONTACT THE ENGINEER TO DETERMINE HOW TO PROCEED WITH RESPLICING. PROVIDE AS–BUILT PLANS TO THE ENGINEER IF FINAL SPLICE ARRANGEMENT DIFFERS FROM THE SUPPLIED SPLICE DETAILS.

3. ETHERNET SWITCH TERMINATION CONFIGURATIONS ARE GENERIC. CONTRACTOR IS RESPONSIBLE FOR DETERMINING \ ENSURING PROPER TERMINATIONS.

4. INCLUDE ON THE COVER OF EACH SPLICE TRAY THE FOLLOWING:
REFERENCE SECTION 1731 "FIBER OPTIC SPLICE ENCLOSURE"

1) SPLICE LOCATION
2) DATE
3) COMPANY NAME
4) NAME OF INDIVIDUAL PERFORMING THE SPLICING

PRIOR TO INSTALLING THE COVER ON THE SPLICE TRAY TAKE A DIGITAL PHOTOGRAPH SHOWING THE SPLICE TRAY AND INFORMATION SHOWN ABOVE (1–4) AND SUBMIT PHOTOGRAPH ALONG WITH OTDR TEST RESULTS.

AECOM
NC Firm License No.: F-0342
5438 Wade Park Boulevard
Suite 200 Raleigh, NC 27607
Phone: 919-461-1100

DOCUMENT NOT CONSIDERED FINAL UNLESS ALL SIGNATURES COMPLETED

Prepared for the Offices of:
NORTH CAROLINA DEPARTMENT OF TRANSPORTATION
Integrated Mobility and Safety Division
Traffic Engineering Branch
750 N. Greenfield Pkwy., Garner, NC 27529

Post-Let
Raleigh Signal System
Splice Details

Division 5 Wake County Raleigh

PLAN DATE: March 2025
PREPARED BY: A. Ravipati
PREPARED BY: M.P. Cavenaugh
REVIEWED BY: C.L. Kalencik

SCALE 0 N/A NTS

REVISIONS	INIT.	DATE

SEAL
NORTH CAROLINA PROFESSIONAL ENGINEER SEAL 040715 COURTNEY L. KALENCIK

DocuSigned by: Courtney L Kalencik SIGNATURE 3/27/2025 DATE

CADD Filename:

3/27/2025
mpcavenaugh
Finalm

3/27/2025 4:06:51 PM C:\Users\mpcavenaugh\pw.bentley.com\AECOM_USA_North_Carolina\Documents\60488049-U-5302\900-CAD GIS\910_CAD\TO_NCDOT_TIP\Traffic\Signals\Design\Signals\Signal Comm_2025\Post-Let\U5302_scp_psh_08_POST.dgn

Docusign Envelope ID: CCCD5626-C095-40CC-9C14-362554800AAD

PROJECT REFERENCE NO.	SHEET NO.
U-5302	SCP 9

EXISTING AERIAL SPLICE ENCLOSURE 271
US 401 (FAYETTEVILLE ROAD) AT
SR 1006 (OLD STAGE ROAD)
SIG. INV. # 05–0583

LEGEND

COLOR CODE TIA/EIA 598–A	
(1) BLUE	(7) RED
(2) ORANGE	(8) BLACK
(3) GREEN	(9) YELLOW
(4) BROWN	(10) VIOLET
(5) SLATE	(11) ROSE
(6) WHITE	(12) AQUA

X = NEW FUSION SPLICE INDIVIDUAL FIBER
C = CAP, COIL, AND SEAL

Notes:
Unused fibers left coiled and stored in splice tray.
Unused Buffer Tubes left coiled and stored in splice tray.

MODIFY EXISTING AERIAL SPLICE ENCLOSURE 271

EXISTING CABLE
TO
SPLICE ENCLOSURE (05–1783)
SOUTH OF SR 1006 (OLD STAGE RD)/
SR 1374 (FARM RD)

48 FIBERS IN 4 BUFFER TUBES

BLUE BUFFER TUBE
ORANGE BUFFER TUBE
GREEN BUFFER TUBE
BROWN BUFFER TUBE

EXISTING CABLE
TO
SPLICE ENCLOSURE (05–1811)
NORTH OF SR 1006 (OLD STAGE RD)/
SR 1374 (FARM RD)

48 FIBERS IN 4 BUFFER TUBES

BLUE BUFFER TUBE
ORANGE BUFFER TUBE
GREEN BUFFER TUBE
BROWN BUFFER TUBE

TMP PHASE III

CONTROLLER CABINET
05–1784

PATCH PANEL WITH
ST CONNECTORS

VIDEO/DATA
PORTS TO
CONTROLLER

TX 1
RX 1
TX 2
RX 2
NEW ETHERNET EDGE SWITCH

NEW DROP CABLE ASSEMBLY
TMP PHASE III

EXISTING CABLE
TO
SPLICE ENCLOSURE (OLD STAGE RD) AT
SR 1006 (GROVEMONT RD)
SR 2720

48 FIBERS IN 4 BUFFER TUBES

BLUE BUFFER TUBE
ORANGE BUFFER TUBE
GREEN BUFFER TUBE
BROWN BUFFER TUBE

EXISTING DROP CABLE ASSEMBLY
TMP PHASE I

TMP PHASE I

CONTROLLER CABINET
05–0583

PATCH PANEL WITH
ST CONNECTORS

VIDEO/DATA
PORTS TO
CONTROLLER

TX 1
RX 1
TX 2
RX 2
NEW ETHERNET EDGE SWITCH

1. NOTIFY THE RALEIGH SIGNAL SYSTEM OFFICE, CHRIS JEFFERSON, AT (919) 996–4064, SEVEN (7) DAYS PRIOR TO BEGINNING WORK ON COMMUNICATIONS CABLE FOR SIGNAL COMMUNICATIONS TO ARRANGE FOR THE ENGINEER TO PROGRAM THE NEW FIELD ETHERNET SWITCHES WITH THE NECESSARY NETWORK CONFIGURATION DATA, INCLUDING BUT NOT LIMITED TO: THE PROJECT IP ADDRESS, DEFAULT GATEWAY, SUBNET MASK AND VLAN ID INFORMATION. CUTOVER TO NEW FIBER SHALL NOT EXCEED 24 HOURS IN DURATION. NOTIFY THE ENGINEER AFTER ALL WORK IS PERFORMED TO ENSURE THAT ALL FIBER CIRCUITS ARE FUNCTIONING PROPERLY. WORK IS NOT COMPLETE UNTIL THE SIGNAL SYSTEM IS BACK UP AND OPERATIONAL.

2. CONTRACTOR TO RECORD EXISTING SPLICE ARRANGEMENT FOR COMPARISON TO THE SUPPLIED SPLICE DETAILS. IF DISCREPANCIES EXIST, CONTACT THE ENGINEER TO DETERMINE HOW TO PROCEED WITH RESPLICING. PROVIDE AS–BUILT PLANS TO THE ENGINEER IF FINAL SPLICE ARRANGEMENT DIFFERS FROM THE SUPPLIED SPLICE DETAILS.

3. ETHERNET SWITCH TERMINATION CONFIGURATIONS ARE GENERIC. CONTRACTOR IS RESPONSIBLE FOR DETERMINING \ ENSURING PROPER TERMINATIONS.

4. INCLUDE ON THE COVER OF EACH SPLICE TRAY THE FOLLOWING:
REFERENCE SECTION 1731 "FIBER OPTIC SPLICE ENCLOSURE"

1) SPLICE LOCATION
2) DATE
3) COMPANY NAME
4) NAME OF INDIVIDUAL PERFORMING THE SPLICING

PRIOR TO INSTALLING THE COVER ON THE SPLICE TRAY TAKE A DIGITAL PHOTOGRAPH SHOWING THE SPLICE TRAY AND INFORMATION SHOWN ABOVE (1–4) AND SUBMIT PHOTOGRAPH ALONG WITH OTDR TEST RESULTS.

AECOM
NC Firm License No.: F-0342
5438 Wade Park Boulevard
Suite 200 Raleigh, NC 27607
Phone: 919-461-1100

DOCUMENT NOT CONSIDERED FINAL
UNLESS ALL SIGNATURES COMPLETED

Prepared for the Offices of:
North Carolina Department of Transportation
Integrated Mobility and Safety Division
Traffic Engineering Branch
Transportation Systems Section
750 N. Greenfield Pkwy., Garner, NC 27529

Post-Let
Raleigh Signal System
Splice Details

Division 5 Wake County Raleigh

PLAN DATE: March 2025 PREPARED BY: A. Ravipati
PREPARED BY: M.P. Cavenaugh REVIEWED BY: C.L. Kalencik

SCALE 0 N/A NTS

REVISIONS	INIT.	DATE

SEAL
NORTH CAROLINA PROFESSIONAL SEAL 040715 ENGINEER COURTNEY L. KALENCIK

DocuSigned by:
Courtney L. Kalencik 3/27/2025
SIGNATURE DATE

CADD Filename:

3/27/2025
p:\projects\com-nc-pw.bentley.com:AECOM_USA_North_Carolina%Documents%60488049-U-5302%900-CAD GIS%910_CAD%70_NCDOT_TIP%Traffic%Signals%Design%Signals%Signal Comm_2025%Post-Let Traffic.dgn
tindall

Docusign Envelope ID: CCCD5626-C095-40CC-9C14-362554800AAD

PROJECT REFERENCE NO.	SHEET NO.
U-5302	SCP 10

NEW AERIAL SPLICE ENCLOSURE
US 401 (FAYETTEVILLE ROAD) NORTH OF
SR 1006 (OLD STAGE RD)/SR 1374 (FARM RD)
SIG. INV. # 05–1811

LEGEND

COLOR CODE TIA/EIA 598–A	
(1) BLUE	(7) RED
(2) ORANGE	(8) BLACK
(3) GREEN	(9) YELLOW
(4) BROWN	(10) VIOLET
(5) SLATE	(11) ROSE
(6) WHITE	(12) AQUA

X = NEW FUSION SPLICE INDIVIDUAL FIBER
C = CAP, COIL, AND SEAL

Notes:
Unused fibers left coiled and stored in splice tray.
Unused Buffer Tubes left coiled and stored in splice tray.

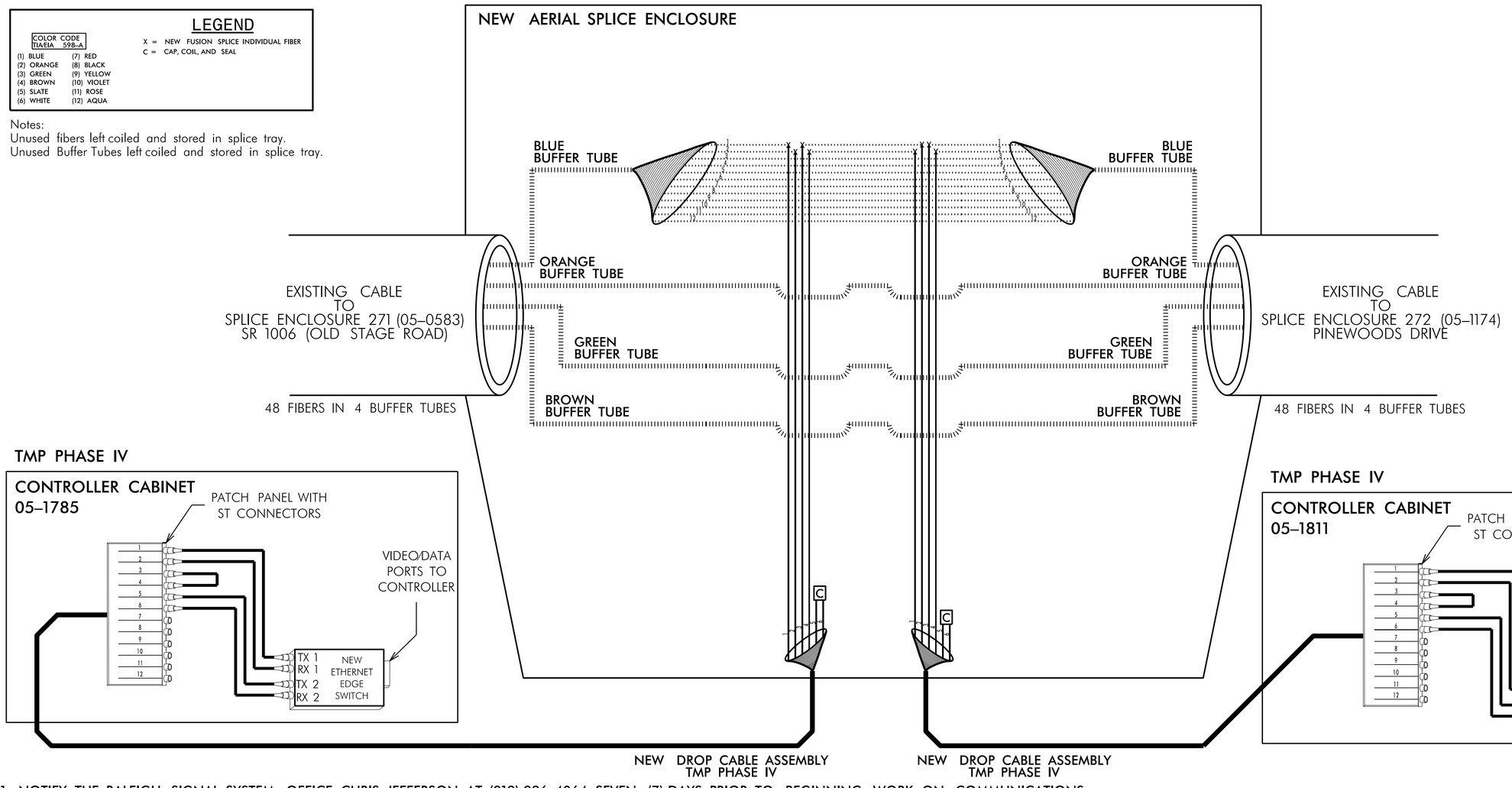

1. NOTIFY THE RALEIGH SIGNAL SYSTEM OFFICE, CHRIS JEFFERSON, AT (919) 996–4064, SEVEN (7) DAYS PRIOR TO BEGINNING WORK ON COMMUNICATIONS CABLE FOR SIGNAL COMMUNICATIONS TO ARRANGE FOR THE ENGINEER TO PROGRAM THE NEW FIELD ETHERNET SWITCHES WITH THE NECESSARY NETWORK CONFIGURATION DATA, INCLUDING BUT NOT LIMITED TO: THE PROJECT IP ADDRESS, DEFAULT GATEWAY, SUBNET MASK AND VLAN ID INFORMATION. CUTOVER TO NEW FIBER SHALL NOT EXCEED 24 HOURS IN DURATION. NOTIFY THE ENGINEER AFTER ALL WORK IS PERFORMED TO ENSURE THAT ALL FIBER CIRCUITS ARE FUNCTIONING PROPERLY. WORK IS NOT COMPLETE UNTIL THE SIGNAL SYSTEM IS BACK UP AND OPERATIONAL.

2. CONTRACTOR TO RECORD EXISTING SPLICE ARRANGEMENT FOR COMPARISON TO THE SUPPLIED SPLICE DETAILS. IF DISCREPANCIES EXIST, CONTACT THE ENGINEER TO DETERMINE HOW TO PROCEED WITH RESPLICING. PROVIDE AS–BUILT PLANS TO THE ENGINEER IF FINAL SPLICE ARRANGEMENT DIFFERS FROM THE SUPPLIED SPLICE DETAILS.

3. ETHERNET SWITCH TERMINATION CONFIGURATIONS ARE GENERIC. CONTRACTOR IS RESPONSIBLE FOR DETERMINING \ ENSURING PROPER TERMINATIONS.

4. INCLUDE ON THE COVER OF EACH SPLICE TRAY THE FOLLOWING:
REFERENCE SECTION 1731 "FIBER OPTIC SPLICE ENCLOSURE"

1) SPLICE LOCATION
2) DATE
3) COMPANY NAME
4) NAME OF INDIVIDUAL PERFORMING THE SPLICING

PRIOR TO INSTALLING THE COVER ON THE SPLICE TRAY TAKE A DIGITAL PHOTOGRAPH SHOWING THE SPLICE TRAY AND INFORMATION SHOWN ABOVE (1–4) AND SUBMIT PHOTOGRAPH ALONG WITH OTDR TEST RESULTS.

AECOM
NC Firm License No.: F-0342
5438 Wade Park Boulevard
Suite 200 Raleigh, NC 27607
Phone: 919-461-1100

DOCUMENT NOT CONSIDERED FINAL UNLESS ALL SIGNATURES COMPLETED

Prepared for the Offices of:
NORTH CAROLINA DEPARTMENT OF TRANSPORTATION
Transportation Mobility and Safety Division
750 N. Greenfield Pkwy., Garner, NC 27529

Post-Let
Raleigh Signal System
Splice Details

Division 5 Wake County Raleigh

PLAN DATE: March 2025 PREPARED BY: A. Ravipati
PREPARED BY: M.P. Cavenaugh REVIEWED BY: C.L. Kalencik

SCALE 0 N/A NTS

REVISIONS	INIT.	DATE

SEAL
NORTH CAROLINA PROFESSIONAL SEAL 040715 ENGINEER COURTNEY L. KALENCIK

DocuSigned by: Courtney L Kalencik 3/27/2025
SIGNATURE DATE

CADD Filename:

3/27/2025
dgn: ...com:aecom-ncpw.bentley.com:AECOM_USA_North_Carolina#Documents#60488049-u-5302#900-CAD GIS#910_CAD#TO_NCDOT_TIP#Traffic#Signals#Design#Signals#Signal Comm_2025#Post-Let_Splice_Enclosure_10_POST.dgn
User: tindalm