Docusign Envelope ID: BE8DFC57-5F2C-46C5-88C7-605D658A0FE3

PROJECT REFERENCE NO.	SHEET NO.
U-5797	Sig. 11.1

18 CHANNEL IP CONFLICT MONITOR PROGRAMMING DETAIL

(remove jumpers and set switches as shown)

REMOVE DIODE JUMPERS 1-5, 1-6, 1-9, 1-11, 2-5, 2-6, 2-9, 2-11, 2-18, 3-8, 3-10, 4-8, 4-10, 4-12, 5-9, 5-11, 5-18, 6-9, 6-11, 6-18, 8-10, 8-12, 9-11, 9-18, 10-12, AND 11-18.

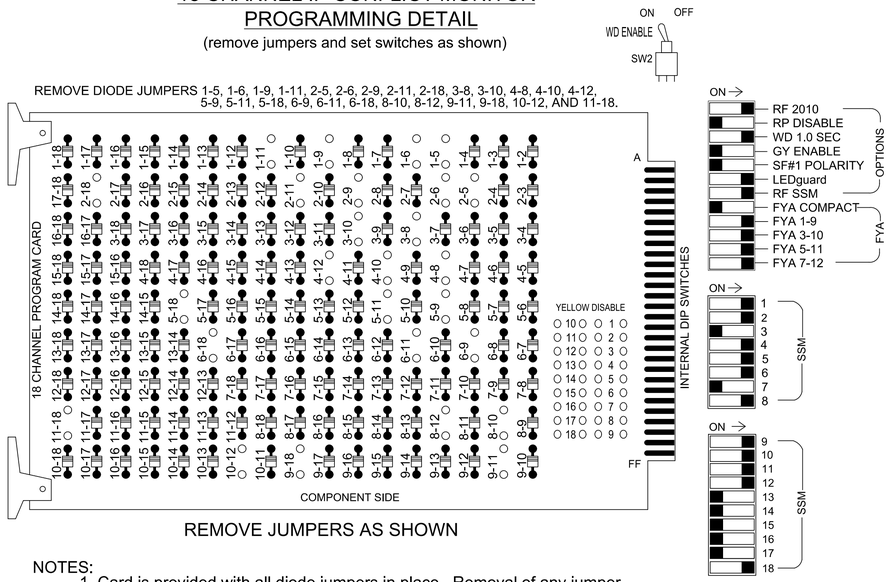

REMOVE JUMPERS AS SHOWN

NOTES:

1. Card is provided with all diode jumpers in place. Removal of any jumper allows its channels to run concurrently.
2. Ensure jumpers SEL2-SEL5 and SEL9 are present on the monitor board.
3. Ensure that the Red Enable is active at all times during normal operation.
4. Integrate monitor with Ethernet network in cabinet.

NOTES

1. To prevent "flash-conflict" problems, insert red flash program blocks for all unused vehicle load switches in the output file. The installer shall verify that signal heads flash in accordance with the signal plan.
2. Program phase 4 and phase 8 for Dual Entry.
3. Program phase 3 for No Startup Veh Call.
4. Program controller to start up in phase 2 Green No Walk, phase 3 Phase Not On, and phase 6 Green No Walk.
5. If this signal will be managed by an ATMS software, enable controller and detector logging for all detectors used at this location.
6. The cabinet and controller are part of the Signal System #D06-18 Lumberton NC 211 (N. Roberts Avenue).

EQUIPMENT INFORMATION

Controller.....2070LX
Cabinet.....332 w/ Aux
Software.....Q-Free MAXTIME
Cabinet Mount.....Base
Output File Positions.....18 With Aux. Output File
Load Switches Used.....S1, S2, **S3, S4, S5, S7, S8, S11, AUX S1, AUX S2, AUX S4, AUX S5, AUX S6
Phases Used.....1, 2,★3, 4, 5, 6, 8
Overlap "1".....*
Overlap "2".....*
Overlap "3".....*
Overlap "4".....*
Overlap "5".....NOT USED
Overlap "6".....*

*See overlap programming detail on sheet 2
**Used for Preempt Pilot Lamp control
★Used only during Preempt

SIGNAL HEAD HOOK-UP CHART

LOAD SWITCH NO.	S1		S2	S3	S4	S5	S6	S7		S8	S9	S10	S11	S12	AUX S1	AUX S2	AUX S3	AUX S4	AUX S5	AUX S6
CMU CHANNEL NO.	1		2	13	3	4	14	5		6	15	7	8	16	9	10	17	11	12	18
PHASE	1		2	2 PED	3	4	4 PED	5		6	6 PED	7	8	8 PED	OL1	OL2	OL5	OL3	OL4	OL6
SIGNAL HEAD NO.	11★	83	21,22	EV PILOT LAMP	81★	42,43	NU	51★	43	61,62	NU	NU	82,83	NU	11★	81★	NU	51★	41★	23★
RED	*		128			101		*		134			107							A104
YELLOW			129		*	102				135			108							
GREEN			130			103				136			109							
RED ARROW															A121	A124		A114	A101	
YELLOW ARROW		126							132						A122	A125		A115	A102	A105
FLASHING YELLOW ARROW															A123	A126		A116	A103	A106
GREEN ARROW	127	127			118			133	133											
PED YELLOW				* 114																
				*																

NU = Not Used

* Denotes install load resistor. See load resistor installation detail this sheet.
★ See pictorial of head wiring in detail this sheet.

FYA SIGNAL WIRING DETAIL

(wire signal heads as shown)

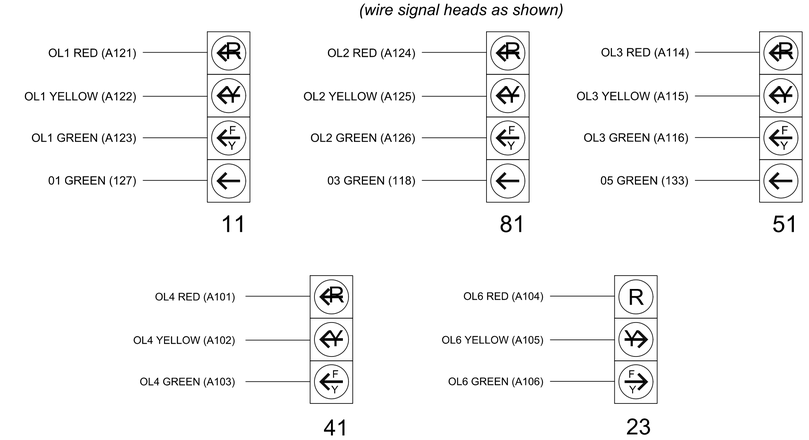

INPUT FILE POSITION LAYOUT

(front view)

		1	2	3	4	5	6	7	8	9	1O	11	12	13	14
FILE "I"	U	SLOT EMPTY	SLOT EMPTY	SLOT EMPTY	SLOT EMPTY	SLOT EMPTY	SLOT EMPTY	SLOT EMPTY	SLOT EMPTY	SLOT EMPTY	SLOT EMPTY	SLOT EMPTY	SLOT EMPTY	SLOT EMPTY	FS DC ISOLATOR
	L														ST DC ISOLATOR
FILE "J"	U	SLOT EMPTY	SLOT EMPTY	SLOT EMPTY	SLOT EMPTY	SLOT EMPTY	SLOT EMPTY	SLOT EMPTY	SLOT EMPTY	SLOT EMPTY	SLOT EMPTY	SLOT EMPTY	SLOT EMPTY	SLOT EMPTY	NOT USED
	L														PRE2 AC ISOLATOR

MULTIZONE DETECTION

EX.: 1A, 2A, ETC. = LOOP NO.'S

FS = FLASH SENSE
ST = STOP TIME
PRE = PREEMPT

LOAD RESISTOR INSTALLATION DETAIL

(install resistors as shown)

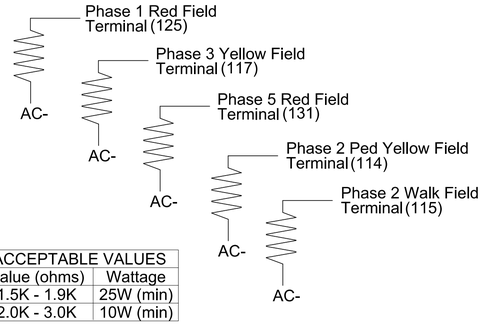

ACCEPTABLE VALUES	
Value (ohms)	Wattage
1.5K - 1.9K	25W (min)
2.0K - 3.0K	10W (min)

SPECIAL DETECTOR NOTE

Install a multizone microwave detection system for vehicle detection. Perform installation according to manufacturer's directions and NCDOT engineer -approved mounting locations to accomplish the detection schemes shown on the Signal Design Plans.

THIS ELECTRICAL DETAIL IS FOR
THE SIGNAL DESIGN: 06-0897T1
DESIGNED: Feb 2025
SEALED: 03/19/2025
REVISED:

Temporary Design 1 - TMP Phase IV, Step 4
Electrical Detail - Sheet 1 of 3

DOCUMENT NOT CONSIDERED FINAL UNLESS ALL SIGNATURES COMPLETED

ELECTRICAL AND PROGRAMMING DETAILS FOR:

NC 211 (N. Roberts Avenue) at Walnut Street

Division 6 Robeson County Lumberton

PLAN DATE:	Feb 2025	REVIEWED BY:	H.M. Surti
PREPARED BY:	R.L. Aristondo	REVIEWED BY:	T.M. Moody

REVISIONS	INIT.	DATE

Prepared for the Offices of:
Traffic Engineering Mobility and Safety Division
Signals Management Section
750 N.Greenfield Pkwy,Garner,NC 27529

SEAL
NORTH CAROLINA PROFESSIONAL SEAL 040329 ENGINEER TRENT M. MOODY

DocuSigned by: Trent Moody 03/19/2025
SIGNATURE DATE

SIG. INVENTORY NO. 06-0897T1

STV Engineers, Inc.
900 West Trade St., Suite 715
Charlotte, NC 28202
(704) 372-1885
NC License Number F-0991

2/21/2025
ALL_Projects#U18560#U18560_0001450_Deliverables & Submittals#U-5797#Traffic#Signals#Temporary Signals#06-0897 (Roberts-Walnut)#06089TT1_sm_ele_2024xxxx.dgn
LeonArR