Docusign Envelope ID: 60FC4915-DA21-4062-BDAB-0085C70609E9

TIP PROJECT: I-5898

CONTRACT: C205018

STATE OF NORTH CAROLINA
DIVISION OF HIGHWAYS

ROCKINGHAM COUNTY

STATE	STATE PROJECT REFERENCE NO.	SHEET NO.	TOTAL SHEETS
N.C.	I-5898		

STATE PROJ. NO.	F. A. PROJ. NO.	DESCRIPTION
46860.1.1		PE
46860.2.1		R / W
46860.2.2		UTIL
46860.3.1		CONST

LOCATION: US 311 /NC 135 INTERCHANGE. REPLACE BRIDGE 780074 AND UPGRADE INTERCHANGE

TYPE OF WORK: GRADING, PAVING, DRAINAGE, STRUCTURE AND MSE WALLS

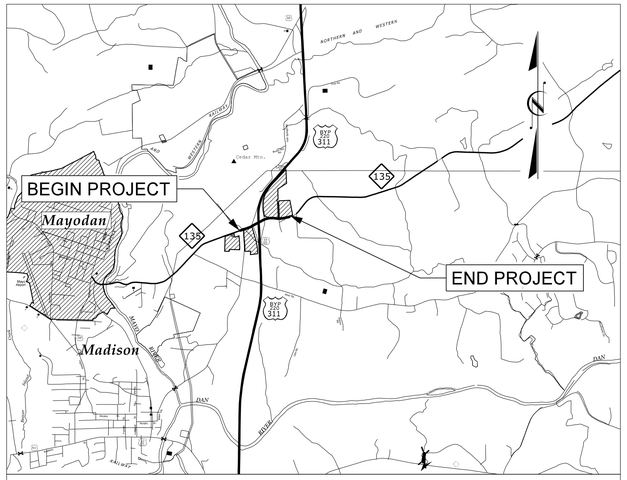

VICINITY MAP (NTS)

MAYODAN MUNICIPAL BOUNDARIES

NAD 83
NA 2011

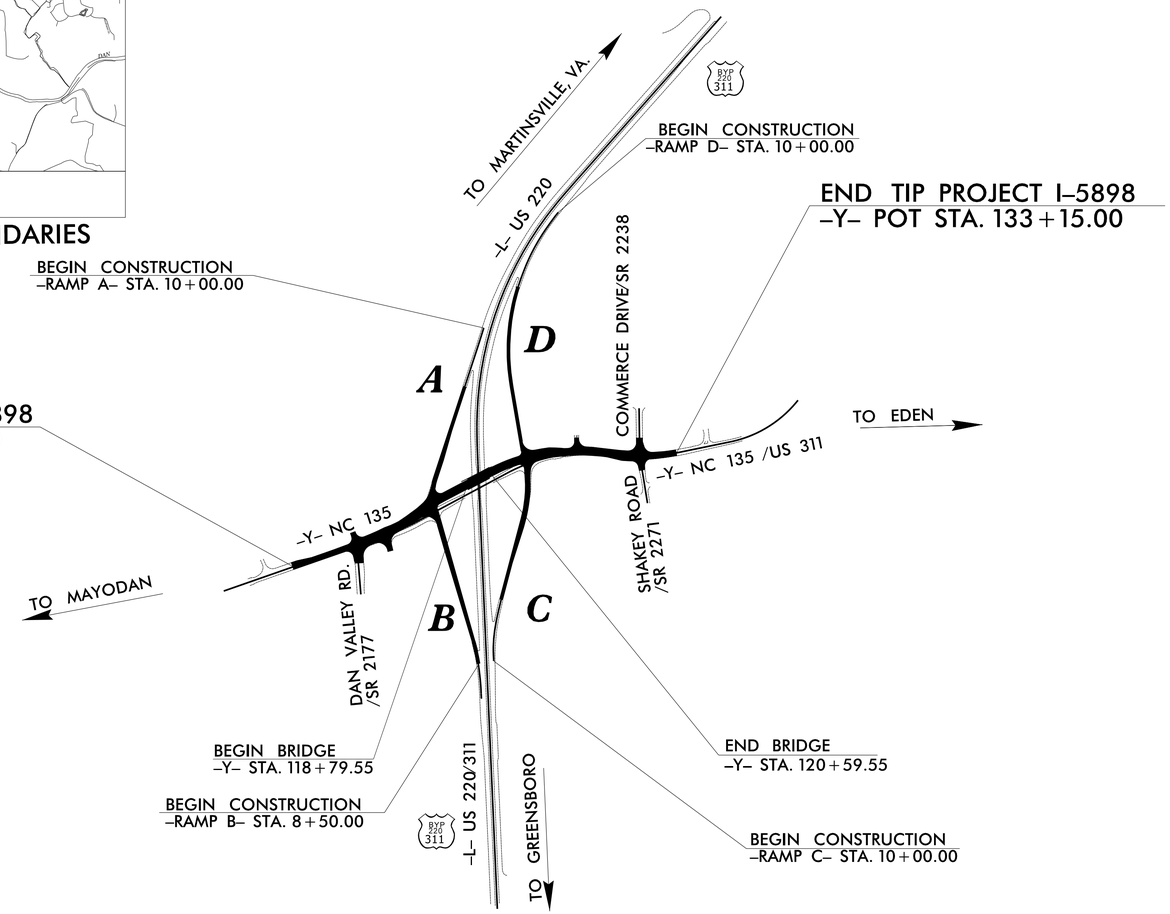

STRUCTURE

DESIGN DATA

ADT 2024 = 17,150
ADT 2044 = 20,600
K = 11 %
D = 55 %
T = 15 % *
V = 40 MPH
* TTST = 5% DUAL 10%
FUNC CLASS =
RURAL MINOR ARTERIAL
STATEWIDE TIER

PROJECT LENGTH

LENGTH ROADWAY TIP PROJECT I-5898	=	0.480 MILES
LENGTH BRIDGE TIP PROJECT I-5898	=	0.034 MILES
TOTAL LENGTH OF TIP PROJECT I-5898	=	0.514 MILES

NCDOT POINT OF CONTACT:

ROB WEISZ, PE
PROJECT ENGINEER

Prepared in the Office of:

Johnson, Mirmiran, & Thompson Inc.
4700 Falls of Neuse Rd, Suite 100,
Raleigh, NC, 27609
License No: C-3097

2024 STANDARD SPECIFICATIONS

LETTING DATE:
DECEMBER 16, 2025

GWENDOLEN F. WILSON, PE
PROJECT ENGINEER

STEPHEN T. CHAMPION, PE
PROJECT DESIGN ENGINEER

NORTH CAROLINA PROFESSIONAL SEAL 045282 ENGINEER GWENDOLEN F. WILSON
DocuSigned by:
11/12/2025

DOCUMENT NOT CONSIDERED FINAL UNLESS ALL SIGNATURES COMPLETED

STATE OF NORTH CAROLINA • DEPARTMENT OF TRANSPORTATION •

01:22 PM on Wednesday, November 12, 2025
C:\Users\wecr\AuthorUpdates\Downloads\000_I-5898_SMU_TSH_500.dgn
wecr\AuthorUpdates

Docusign Envelope ID: 9B85712E-1E0F-40F5-88A6-093A89BC0514

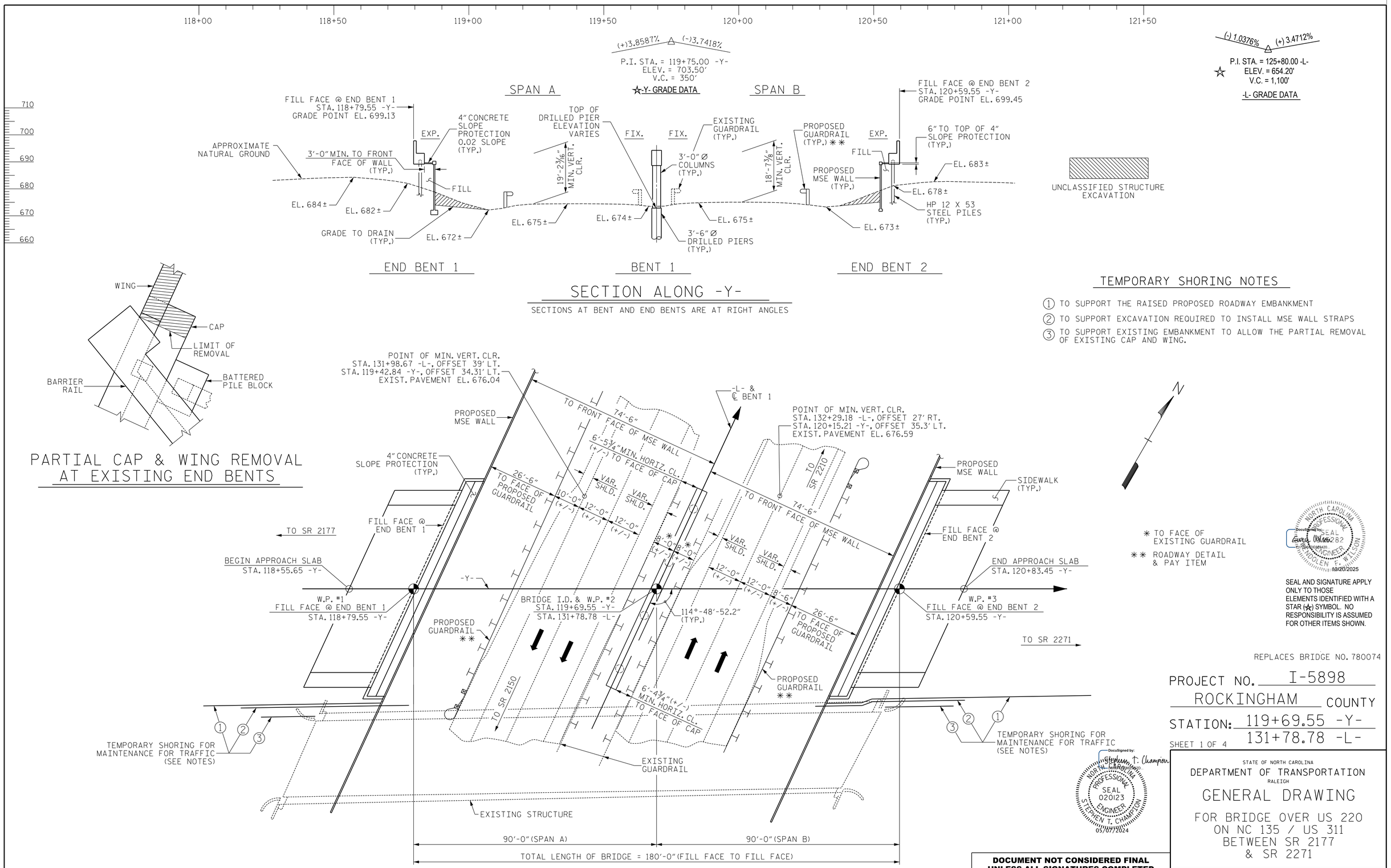

PARTIAL CAP & WING REMOVAL AT EXISTING END BENTS

SECTION ALONG -Y-

SECTIONS AT BENT AND END BENTS ARE AT RIGHT ANGLES

TEMPORARY SHORING NOTES

1. TO SUPPORT THE RAISED PROPOSED ROADWAY EMBANKMENT
2. TO SUPPORT EXCAVATION REQUIRED TO INSTALL MSE WALL STRAPS
3. TO SUPPORT EXISTING EMBANKMENT TO ALLOW THE PARTIAL REMOVAL OF EXISTING CAP AND WING.

PLAN ALONG -Y-

PILES NOT SHOWN IN PLAN VIEW

REPLACES BRIDGE NO. 780074

PROJECT NO. I-5898

ROCKINGHAM COUNTY

STATION: 119+69.55 -Y-
131+78.78 -L-

SHEET 1 OF 4

STATE OF NORTH CAROLINA
DEPARTMENT OF TRANSPORTATION
RALEIGH

GENERAL DRAWING

FOR BRIDGE OVER US 220
ON NC 135 / US 311
BETWEEN SR 2177
& SR 2271

REVISIONS								SHEET NO.
NO.	BY:	DATE:	NO.	BY:	DATE:			S-1
1			3					TOTAL SHEETS
2			4					39

DOCUMENT NOT CONSIDERED FINAL UNLESS ALL SIGNATURES COMPLETED

Johnson, Mirmiran, & Thompson Inc.
4700 Falls of Neuse Rd, Suite 100,
Raleigh, NC, 27609
License No: C-3097

DWN. BY: WDC	DATE: 02/24	
CHKD. BY: GFW	DATE: 02/24	
DES. EGR. OF RECORD: STC	DATE: 02/24	

wdcrutcher
DGN: Dgn:\\jmt-pw.bentley.com;jmt_pw-01\Documents\Projects\2016\16-0388-005\Design\Structures\PLANS\DGN\00J_I-5898_SMU_G001_S01.dgn
TIME: 06:15 AM on Sunday, May 05, 2024

DocuSign Envelope ID: CFF976E0-6897-4697-83E4-E7CC4C08C579

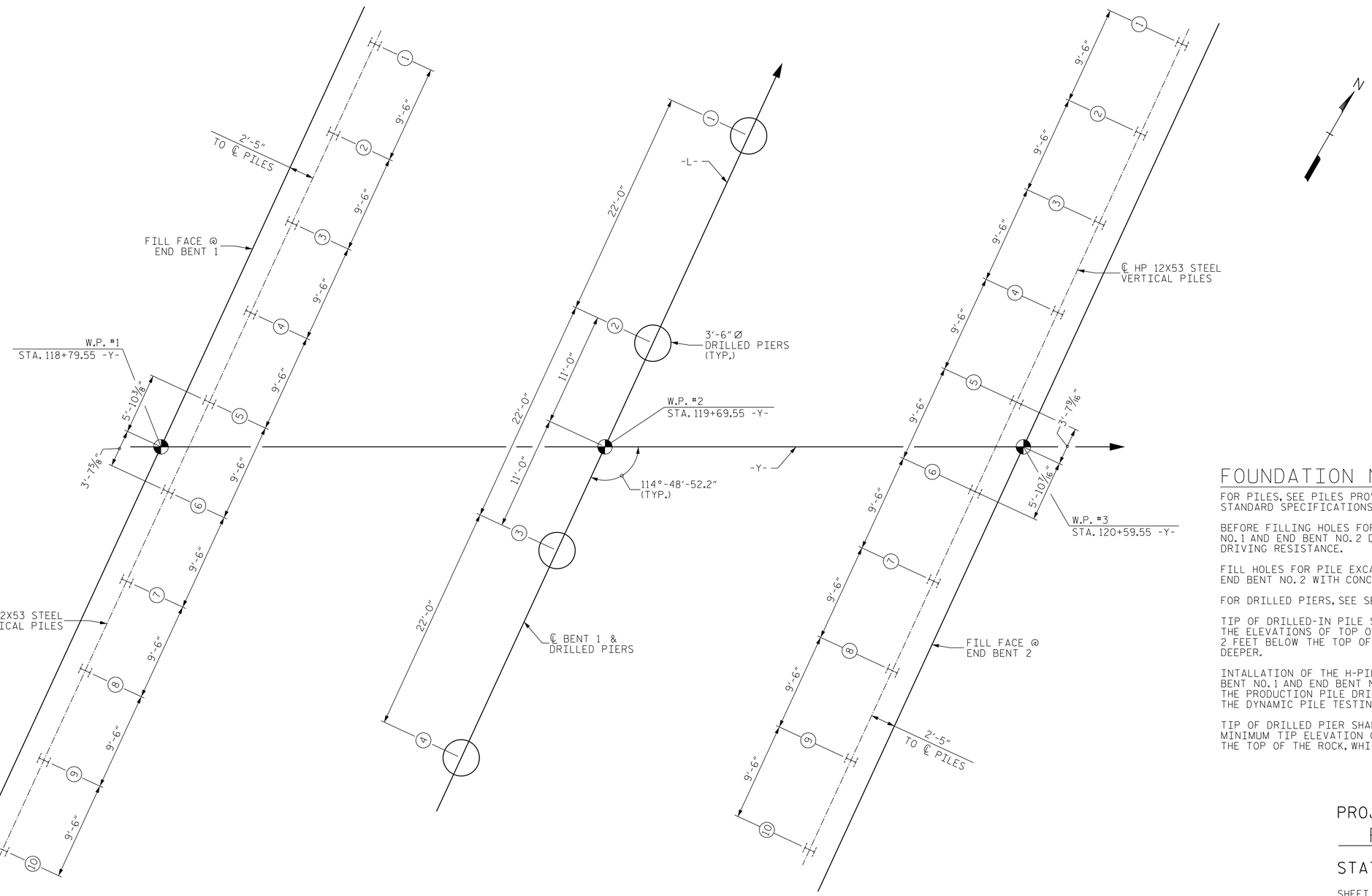

END BENT 1

BENT 1

END BENT 2

FOUNDATION LAYOUT

DIMENSIONS LOCATING PILES AND DRILLED PIERS ARE SHOWN TO THE CENTERLINES.

FOUNDATION NOTES

FOR PILES, SEE PILES PROVISION AND SECTION 450 OF THE STANDARD SPECIFICATIONS.

BEFORE FILLING HOLES FOR PILE EXCAVATION AT END BENT NO. 1 AND END BENT NO. 2 DRIVE PILES TO THE REQUIRED DRIVING RESISTANCE.

FILL HOLES FOR PILE EXCAVATION AT END BENT NO. 1 AND END BENT NO. 2 WITH CONCRETE OR GROUT.

FOR DRILLED PIERS, SEE SECTION 411 OF THE STANDARD SPECS.

TIP OF DRILLED-IN PILE SHALL BE A MINIMUM OF 10 FEET BELOW THE ELEVATIONS OF TOP OF LEVELING PAD OR A MINIMUM OF 2 FEET BELOW THE TOP OF WEATHERED ROCK, WHICHEVER IS DEEPER.

INTALLATION OF THE H-PILES IN THE DRILLED HOLES AT END BENT NO. 1 AND END BENT NO. 2 SHALL BE DRIVEN TO MEET THE PRODUCTION PILE DRIVING CRITERIA ESTABLISHED BY THE DYNAMIC PILE TESTING.

TIP OF DRILLED PIER SHALL REACH THE DESIGN SPECIFIED MINIMUM TIP ELEVATION OR A MINIMUM OF 10 FEET BELOW THE TOP OF THE ROCK, WHICHEVER IS DEEPER.

PROJECT NO. I-5898
ROCKINGHAM COUNTY
STATION: 119+69.55 -Y-

SHEET 2 OF 4

DocuSigned by: Stephen T. Champion
NORTH CAROLINA PROFESSIONAL SEAL 020123 ENGINEER STEPHEN T. CHAMPION
05/07/2024

STATE OF NORTH CAROLINA
DEPARTMENT OF TRANSPORTATION
RALEIGH

GENERAL DRAWING

FOUNDATION LAYOUT

REVISIONS						SHEET NO.
NO.	BY:	DATE:	NO.	BY:	DATE:	S-2
1			3			TOTAL SHEETS
2			4			39

DOCUMENT NOT CONSIDERED FINAL UNLESS ALL SIGNATURES COMPLETED

Johnson, Mirmiran, & Thompson Inc.
4700 Falls of Neuse Rd, Suite 100,
Raleigh, NC, 27609
License No: C-3097

DWN. BY: WDC	DATE: 02/24
CHKD. BY: GFW	DATE: 02/24
DES. EGR. OF RECORD: STC	DATE: 02/24

wdcrutcher
DGN: pw:\\jmt-pw.bentley.com:jmt_pw-01\Documents\Projects\2016\16-0988-005\Design\Structures\PLANS\DGN\003_I-5898_SMU_FL01_S02.dgn
TIME: 06:15 AM on Sunday, May 05, 2024

Docusign Envelope ID: 9B85712E-1E0F-40F5-88A6-093A89BC0514

SUMMARY OF PILE INFORMATION/INSTALLATION

(Blank entries indicate item is not applicable to structure)

End Bent/ Bent No, Pile(s) #-# (e.g., "Bent 1, Piles 1-5")	Factored Resistance per Pile TONS	Pile Cut-Off (Top of Pile) Elevation FT	Estimated Pile Lenth per Pile FT	Scour Critical Elevation FT	Driven Piles			Predrilling for Piles*			Drilled-In Piles		
					Min Pile Tip (Tip No Higher Than) Elev FT	Required Driving Resistance (RDR)** per Pile TONS	Total Pile Redrives Quantity EACH	Predrilling Length per Pile Lin FT	Predrilling Elevation (Elev Not To Predrill Below) FT	Maximum Predrilling Dia INCHES	Pile Excavation (Bottom of Hole) Elev FT	Pile Exc Not In Soil per Pile Lin FT	Pile Exc In Soil per Pile Lin FT
End Bent 1, Piles 1-10	135	See Substructure Plans	30		663 (L) 660 (R)	180					663 (L) 660 (R)	9.0	1.0
End Bent 2, Piles 1-10	135		30		662 (L) 660 (R)	180					662 (L) 660 (R)	10.0	

*Predrilling for Piles is required for end bents/bents with a predrilling length and at the Contractor's option for end bents/bents with predrilling information but no predrilling length.

$$^{**}RDR = \frac{Factored\ Resistance + Factored\ Downdrag\ Load + Factored\ Dead\ Load}{Dynamic\ Resistance\ Factor} + Nominal\ Downdrag\ Resistance + \frac{Nominal\ Scour\ Resistance}{Scour\ Resistance\ Factor}$$

SUMMARY OF PDA/PILE ORDER LENGTHS

(Blank entries indicate item is not applicable to structure)

Dynamic Pile Testing (DPT)				Pile Order Lengths	
End Bent/ Bent No	DPT Testing Required? YES or MAYBE	DPT Test Pile Length FT	Total DPT Testing Quantity EACH	End Bent/ Bent No(s)	Pile Order Length Basis* EST or DPT
End Bent 1, Piles 1-10	YES	30	1		
End Bent 2, Piles 1-10	YES	30	1		

*EST = Pile order lengths from estimated pile lengths; DPT = Pile order lengths based on DPT testing. For groups of end bents/bents with pile order lengths based on DPT testing, the first end bent/bent no. listed for each group is the representative end bent/bent with the DPT.

PILE DESIGN INFORMATION

(Blank entries indicate item is not applicable to structure)

End Bent/ Bent No, Pile(s) #-# (e.g., "Bent 1, Piles 1-5")	Factored Axial Load per Pile TONS	Factored Downdrag Load per Pile TONS	Factored Dead Load* per Pile TONS	Dynamic Resistance Factor	Nominal Downdrag Resistance per Pile TONS	Nominal Scour Resistance per Pile TONS	Scour Resistance Factor (Default = 1.00)
End Bent 1, Piles 1-10	135			0.75			
End Bent 2, Piles 1-10	135			0.75			

*Factored Dead Load is factored weight of pile above the ground line.

NOTES:

1. The Pile and Drilled Pier Foundation Tables are based on the bridge substructure design and foundation recommendations sealed by a North Carolina Professional Engineer (Chien-Ting Tang, 047389) on 2-10-2022.
2. Total Pile Driving Equipment Setup quantity (not shown in Pile Foundation Tables) equals the number of driven piles, i.e., the number of piles with a Required Driving Resistance.
3. The Engineer will determine the need for DPT Testing, Pipe Pile Plates, Permanent Steel Casing, SPTs, CSL Testing, SID Inspections and PITs when these items may be required."

SUMMARY OF DRILLED PIER INFORMATION/INSTALLATION

(Blank entries indicate item is not applicable to structure)

End Bent/ Bent No, Pier(s) #-# (e.g., "Bent 1, Piers 1-3")	Factored Resistance per Pier TONS	Minimum Pier Tip (Tip No Higher Than) Elevation FT	Required Tip Resistance per Pier TSF	Scour Critical Elevation FT	Minimum Drilled Pier Penetration Into Rock per Pier Lin FT	Drilled Pier Length per Pier Lin FT	Drilled Pier Length Not In Soil per Pier Lin FT	Drilled Pier Length In Soil per Pier Lin FT	Permanent Steel Casing Required? YES or MAYBE	Permanent Steel Casing Tip Elevation (Elev Not To Extend Casing Below) FT	Permanent Steel Casing Length* per Pier Lin FT
Bent 1, Piers 1-4	635	655.0	10				15.0	2.0 ☆			

*Permanent Steel Casing Length equals the difference between the ground line or top of drilled pier elevation, whichever is higher, and the permanent casing tip elevation.

SUMMARY OF DRILLED PIER TESTING

(Blank entries indicate item is not applicable to structure)

End Bent/ Bent No, Pier(s) #-# (e.g., "Bent 1, Piers 1-3")	Standard Penetration Test (SPT) Required? YES or MAYBE	Crosshole Sonic Logging (CSL) Required?* YES or MAYBE	Total CSL Tube Length (For All Tubes) per Pier Lin FT	Shaft Inspection Device (SID) Required? YES or MAYBE	Pile Integrity Test (PIT) Required? MAYBE
Bent 1, Piers 1-4		MAYBE		MAYBE	
TOTAL QTY:		1		1	

*CSL Tubes are required if CSL Testing is or may be required. The number of CSL Tubes per drilled pier is equal to one tube per foot of design pier diameter with at least 4 tubes per pier. The length of each CSL Tube is equal to the drilled pier length plus 1.5 ft.

SUMMARY OF PILE ACCESSORIES

(Blank entries indicate item is not applicable to structure)

End Bent/ Bent No, Pile(s) #-# (e.g., "Bent 1, Piles 1-5")	Pipe Pile Plates Required? YES or MAYBE	Steel Pile Points			Steel Pile Tips Required? YES
		Pipe Pile Cutting Shoes Required? YES	Pipe Pile Conical Points Required? YES	H-Pile Points Required? YES	
End Bent 1, Piles 1-10				YES	
End Bent 2, Piles 1-10				YES	
TOTAL QTY:				20	

SEAL AND SIGNATURE APPLY ONLY TO THOSE ELEMENTS IDENTIFIED WITH A STAR (☆) SYMBOL. NO RESPONSIBILITY IS ASSUMED FOR OTHER ITEMS SHOWN.

PROJECT NO. I-5898

ROCKINGHAM COUNTY

STATION: 119+69.55 -Y-

SHEET 3 OF 4

STATE OF NORTH CAROLINA
DEPARTMENT OF TRANSPORTATION
RALEIGH

GENERAL DRAWING

GEOTECHNICAL FOUNDATION TABLES

DOCUMENT NOT CONSIDERED FINAL UNLESS ALL SIGNATURES COMPLETED

Johnson, Mirmiran, & Thompson Inc.
4700 Falls of Neuse Rd, Suite 100,
Raleigh, NC, 27609
License No: C-3097

REVISIONS						SHEET NO.
NO.	BY:	DATE:	NO.	BY:	DATE:	S-3
1			3			TOTAL SHEETS
2			4			39

DWN. BY: WDC DATE: 02/24
CHKD. BY: GFW DATE: 02/24
DES. EGR. OF RECORD: STC DATE: 02/24

wdcrutcher
DGN: pw:\\mt-pw.bentley.com:mt-pw-01\Documents\Projects\20\6\6-0988-005\Design\Structures\PLANS\GEN\005_I-5898_SMU_FT01_S03.dgn
TIME: 06:15 AM on Sunday, May 05, 2024

Docusign Envelope ID: EB12B560-697C-46CD-AC20-71C997E938B0

BM #3: STA. 125+20.51 -Y-, 46.84' LT, ELEV.=691.37', SCRIBED "X" IN TOP BACK CURB, N972278.16, E1724434.89

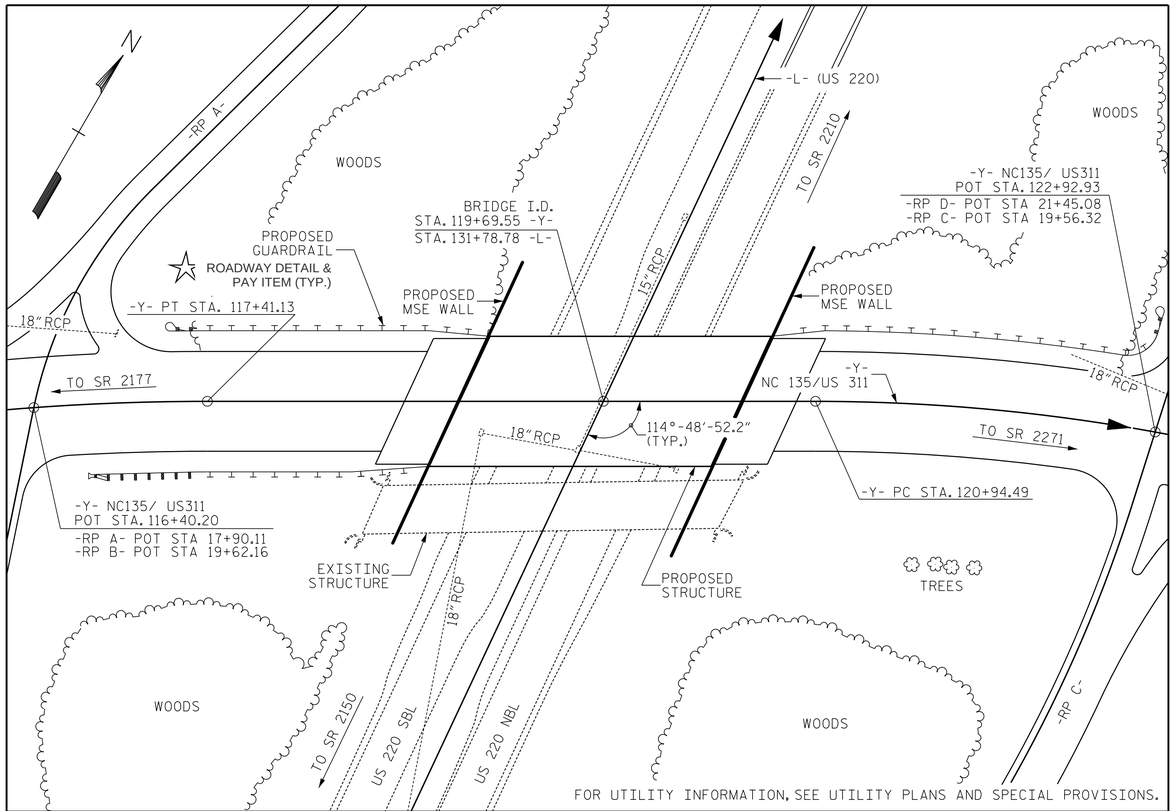

LOCATION SKETCH

NOTES

ASSUMED LIVE LOAD = HL-93 OR ALTERNATE LOADING.

THIS BRIDGE HAS BEEN DESIGNED IN ACCORDANCE WITH THE REQUIREMENTS OF AASHTO LRFD BRIDGE DESIGN SPECIFICATIONS.

THIS BRIDGE IS LOCATED IN SEISMIC ZONE 1.

FOR OTHER DESIGN DATA AND GENERAL NOTES, SEE SHEET SN.

FOR SUBMITTAL OF WORKING DRAWINGS, SEE SPECIAL PROVISIONS.

FOR FALSEWORK AND FORMWORK, SEE SPECIAL PROVISIONS.

FOR CRANE SAFETY, SEE SPECIAL PROVISIONS.

FOR GROUT FOR STRUCTURES, SEE SPECIAL PROVISIONS.

THE ELEVATION AND CLEARANCE SHOWN ON THE PLANS AT THE POINT OF MINIMUM VERTICAL CLEARANCE ARE FROM THE BEST INFORMATION AVAILABLE. PRIOR TO BEGINNING BRIDGE CONSTRUCTION, VERIFY THE ELEVATION ON THE EXISTING PAVEMENT AND CHECK THE CLEARANCE. REPORT ANY VARIATIONS TO THE ENGINEER. ANY PLAN REVISIONS NECESSARY TO ACHIEVE THE REQUIRED MINIMUM VERTICAL CLEARANCE WILL BE PROVIDED BY THE DEPARTMENT.

FOR MAINTENANCE AND PROTECTION OF TRAFFIC BENEATH PROPOSED STRUCTURE, SEE SPECIAL PROVISIONS.

REMOVABLE FORMS MAY BE USED IN LIEU OF METAL STAY-IN-PLACE FORMS IN ACCORDANCE WITH ARTICLE 420-3 OF THE STANDARD SPECIFICATIONS.

NEEDLE BEAMS WILL NOT BE ALLOWED UNLESS OTHERWISE CALLED FOR ON THE PLANS OR APPROVED BY THE ENGINEER.

THE CLASS AA CONCRETE IN THE BRIDGE DECK SHALL CONTAIN FLY ASH OR GROUND GRANULATED BLAST FURNACE SLAG AT THE SUBSTITUTION RATE SPECIFIED IN ARTICLE 1024-1 AND IN ACCORDANCE WITH ARTICLES 1024-5 AND 1024-6 OF THE STANDARD SPECIFICATIONS. NO PAYMENT WILL BE MADE FOR THIS SUBSTITUTION AS IT IS CONSIDERED INCIDENTAL TO THE COST OF THE REINFORCED CONCRETE DECK SLAB.

STEEL SHEET PILING REQUIRED FOR SHORING SHALL BE HOT ROLLED.

FOR LIMITS OF TEMPORARY SHORING FOR MAINTENANCE OF TRAFFIC, SEE TRAFFIC CONTROL PLANS. FOR PAY ITEM FOR TEMPORARY SHORING FOR MAINTENANCE OF TRAFFIC, SEE ROADWAY PLANS.

AFTER SERVING AS A TEMPORARY STRUCTURE, THE EXISTING STRUCTURE CONSISTING OF 4 SPANS: 1 @ 47'-6", 1 @ 57'-0", 1 @ 57'-0", 1 @ 47'-6" OF 45" PC GIRDERS WITH A 28' CLEAR ROADWAY WIDTH AND RC DECK SLAB, ON END BENTS OF RC CAP ON PPC PILES, AND BENTS OF RC POST & BEAM, AND LOCATED JUST OFF THE RIGHT SIDE OF THE PROPOSED BRIDGE, SHALL BE REMOVED. THE EXISTING BRIDGE IS PRESENTLY NOT POSTED FOR LOAD LIMIT. SHOULD THE STRUCTURAL INTEGRITY OF THE BRIDGE DETERIORATE DURING CONSTRUCTION OF THE PROPOSED BRIDGE, A LOAD LIMIT MAY BE POSTED AND MAY BE REDUCED AS FOUND NECESSARY DURING THE LIFE OF THE PROJECT.

THE SUBSTRUCTURE OF THE EXISTING BRIDGE INDICATED ON THE PLANS IS FROM THE BEST INFORMATION AVAILABLE. SINCE THIS INFORMATION IS SHOWN FOR THE CONVENIENCE OF THE CONTRACTOR, THE CONTRACTOR SHALL HAVE NO CLAIM WHATSOEVER AGAINST THE DEPARTMENT OF TRANSPORTATION FOR ANY DELAYS OR ADDITIONAL COST INCURRED BASED ON DIFFERENCES BETWEEN THE EXISTING BRIDGE SUBSTRUCTURE SHOWN ON THE PLANS AND THE ACTUAL CONDITIONS AT THE PROJECT SITE.

FOR ASBESTOS ASSESSMENT, SEE SPECIAL PROVISIONS.

THE MATERIAL SHOWN IN THE CROSS-HATCHED AREA SHALL BE EXCAVATED IN FRONT OF THE MSE WALLS AS DIRECTED BY THE ENGINEER. THIS WORK WILL BE PAID FOR AT THE CONTRACT LUMP SUM PRICE FOR UNCLASSIFIED STRUCTURE EXCAVATION. SEE SECTION 412 OF THE STANDARD SPECIFICATIONS.

TEMPORARY SHORING WILL BE REQUIRED IN THE AREA INDICATED IN THE PLAN VIEW.

FOR EROSION CONTROL MEASURES, SEE EROSION CONTROL PLANS.

TOTAL BILL OF MATERIAL

	REMOVAL OF EXISTING STRUCTURE	ASBESTOS ASSESSMENT	PILE EXCAVATION IN SOIL	PILE EXCAVATION NOT IN SOIL	3'-6" DIA. DRILLED PIERS IN SOIL	3'-6" DIA. DRILLED PIERS NOT IN SOIL	SID INSPECTIONS	CSL TESTING	UNCLASSIFIED STRUCTURE EXCAVATION	REINFORCED CONCRETE DECK SLAB	GROOVING BRIDGE FLOORS	CLASS A CONCRETE	BRIDGE APPROACH SLABS
	LUMP SUM	LUMP SUM	LIN. FT.	LIN. FT.	LIN. FT.	LIN. FT.	EACH	EACH	LUMP SUM	SQ. FT.	SQ. FT.	CU. YD.	LUMP SUM
SUPERSTRUCTURE										13,421	13,262		
END BENT 1			10.0	90.0					LUMP SUM			73.9	
BENT 1					8.0 ☆	60.0	1	1				86.9	
END BENT 2				100.0					LUMP SUM			78.6	
TOTAL	LUMP SUM	LUMP SUM	10.0	190.0	8.0 ☆	60.0	1	1	LUMP SUM	13,421	13,262	239.4	LUMP SUM

TOTAL BILL OF MATERIAL (CONT.)

	REINFORCING STEEL	SPIRAL COLUMN REINFORCING	54" PRESTRESSED CONCRETE GIRDERS		PILE DRIVING EQUIPMENT SETUP FOR HP 12X53 STEEL PILES	HP 12 X 53 STEEL PILES		STEEL PILE POINTS	DYNAMIC PILE TESTING	TWO BAR METAL RAIL	1'-2" x 3'-3" CONCRETE PARAPET	4" SLOPE PROTECTION	ELASTOMERIC BEARINGS	STRIP SEAL EXPANSION JOINTS
	LBS.	LBS.	NO.	LIN. FT.	EACH	NO.	LIN. FT.	EACH	EACH	LIN. FT.	LIN. FT.	SQ. YD.	LUMP SUM	LUMP SUM
SUPERSTRUCTURE			16	1406.00						338.48	355.14			
END BENT 1	10,220				10	10	300	10	1			27		
BENT 1	20,223	2,972												
END BENT 2	10,795				10	10	300	10	1			27		
TOTAL	41,238	2,972	16	1406.00	20	20	600	20	2	338.48	355.14	54	LUMP SUM	LUMP SUM

PROJECT NO. I-5898
ROCKINGHAM COUNTY
STATION: 119+69.55 -Y-

SHEET 4 OF 4

NORTH CAROLINA PROFESSIONAL SEAL 015282 ENGINEER EWEN WILLSON
DocuSigned by: Ewen Willson
10/20/2025

SEAL AND SIGNATURE APPLY ONLY TO THOSE ELEMENTS IDENTIFIED WITH A STAR (☆) SYMBOL. NO RESPONSIBILITY IS ASSUMED FOR OTHER ITEMS SHOWN.

DocuSigned by: Stephen T. Champion
NORTH CAROLINA PROFESSIONAL SEAL 020123 ENGINEER STEPHEN T. CHAMPION
05/07/2024

DOCUMENT NOT CONSIDERED FINAL UNLESS ALL SIGNATURES COMPLETED

Johnson, Mirmiran, & Thompson Inc.
4700 Falls of Neuse Rd, Suite 100,
Raleigh, NC, 27609
License No: C-3097

STATE OF NORTH CAROLINA
DEPARTMENT OF TRANSPORTATION
RALEIGH

GENERAL DRAWING

FOR BRIDGE OVER US 220 ON NC 135 / US 311 BETWEEN SR 2177 & SR 2271

REVISIONS								SHEET NO.
NO.	BY:	DATE:	NO.	BY:	DATE:			S-4
1			3					TOTAL SHEETS
2			4					39

DWN. BY: WDC	DATE: 02/24
CHKD. BY: GFW	DATE: 02/24
DES. EGR. OF RECORD: STC	DATE: 02/24

wdcructer
DGN: pw:\\jmt-pw.bentley.com:jmt-pw-01\Documents\Projects\2016\6-0988-005\Design\Structures\PLANS\GN\007_I-5898_SMU_G002_S04.dgn
TIME: 0616 AM on Sunday, May 05, 2024

DocuSign Envelope ID: CFF976E0-6897-4697-83E4-E7CC4C08C579

LOAD AND RESISTANCE FACTOR RATING (LRFR) SUMMARY FOR PRESTRESSED CONCRETE GIRDERS

LOAD TYPE		VEHICLE	WEIGHT (W) (TONS)	CONTROLLING LOAD RATING (#)	MINIMUM RATING FACTORS (RF)	TONS = W x RF	STRENGTH I LIMIT STATE											SERVICE III LIMIT STATE						COMMENT NUMBER
								MOMENT					SHEAR						MOMENT					
							LIVE-LOAD FACTORS (γ LL)	DISTRIBUTION FACTORS (DF)	RATING FACTOR	SPAN	GIRDER LOCATION	DISTANCE FROM LEFT END OF SPAN (ft)	DISTRIBUTION FACTORS (DF)	RATING FACTOR	SPAN	GIRDER LOCATION	DISTANCE FROM LEFT END OF SPAN (ft)	LIVE-LOAD FACTORS (γ LL)	DISTRIBUTION FACTORS (DF)	RATING FACTOR	SPAN	GIRDER LOCATION	DISTANCE FROM LEFT END OF SPAN (ft)	
DESIGN LOAD		HL-93 (INVENTORY)	N/A	1	1.64	--	1.75	0.789	2.34	A	ER	43.20	1.023	1.64	A	I	69.60	0.80	0.789	2.44	A	ER	43.20	
		HL-93 (OPERATING)	N/A		2.17	--	1.35	0.789	3.03	A	ER	43.20	1.023	2.17	A	I	69.60	N/A						
		HS-20 (INVENTORY)	36.000	2	2.12	76.32	1.75	0.789	3.17	A	ER	43.20	1.023	2.12	A	I	69.60	0.80	0.789	3.30	A	ER	43.20	
		HS-20 (OPERATING)	36.000		2.80	100.80	1.35	0.789	4.10	A	ER	43.20	1.023	2.80	A	I	69.60	N/A						
LEGAL LOAD	SINGLE VEHICLE (SV)	SNSH	13.500		6.69	90.32	1.40	0.789	9.21	A	ER	43.20	1.023	6.69	A	I	69.60	0.80	0.789	7.69	A	ER	43.20	
		SNGARBS2	20.000		4.69	93.80	1.40	0.789	6.74	A	ER	43.20	1.023	4.69	A	I	69.60	0.80	0.789	5.63	A	ER	43.20	
		SNAGRIS2	22.000		4.33	95.26	1.40	0.789	6.34	A	ER	43.20	1.023	4.33	A	I	69.60	0.80	0.789	5.29	A	ER	43.20	
		SNCOTTS3	27.250		3.25	88.56	1.40	0.789	4.58	A	ER	43.20	1.023	3.25	A	I	69.60	0.80	0.789	3.82	A	ER	43.20	
		SNAGGRS4	34.925		2.66	92.90	1.40	0.789	3.78	A	ER	43.20	1.023	2.66	A	I	69.60	0.80	0.789	3.16	A	ER	43.20	
		SNS5A	35.550		2.69	95.63	1.40	0.789	3.70	A	ER	43.20	1.023	2.69	A	I	69.60	0.80	0.789	3.09	A	ER	43.20	
		SNS6A	39.950		2.43	97.08	1.40	0.789	3.38	A	ER	43.20	1.023	2.43	A	I	69.60	0.80	0.789	2.82	A	ER	43.20	
		SNS7B	42.000		2.38	99.96	1.40	0.789	3.21	A	ER	43.20	1.023	2.38	A	I	69.60	0.80	0.789	2.68	A	ER	43.20	
	TRUCK TRACTOR SEMI-TRAILER (TTST)	TNAGRIT3	33.000		2.91	96.03	1.40	0.789	4.11	A	ER	43.20	1.023	2.91	A	I	69.60	0.80	0.789	3.43	A	ER	43.20	
		TNT4A	33.075		2.86	94.59	1.40	0.789	4.12	A	ER	43.20	1.023	2.86	A	I	69.60	0.80	0.789	3.44	A	ER	43.20	
		TNT6A	41.600		2.54	105.66	1.40	0.789	3.35	A	ER	43.20	1.023	2.54	A	I	69.60	0.80	0.789	2.80	A	ER	43.20	
		TNT7A	42.000		2.49	104.58	1.40	0.789	3.36	A	ER	43.20	1.023	2.49	A	I	69.60	0.80	0.789	2.81	A	ER	43.20	
		TNT7B	42.000		2.33	97.86	1.40	0.789	3.45	A	ER	43.20	1.023	2.33	A	I	69.60	0.80	0.789	2.89	A	ER	43.20	
		TNAGRIT4	43.000		2.25	96.75	1.40	0.789	3.30	A	ER	43.20	1.023	2.25	A	I	69.60	0.80	0.789	2.76	A	ER	43.20	
		TNAGT5A	45.000		2.21	99.45	1.40	0.789	3.12	A	ER	43.20	1.023	2.21	A	I	69.60	0.80	0.789	2.61	A	ER	43.20	
		TNAGT5B	45.000	3	2.13	95.85	1.40	0.789	3.09	A	ER	43.20	1.023	2.13	A	I	69.60	0.80	0.789	2.58	A	ER	43.20	
EMERGENCY VEHICLE (EV)		EV2	28.750		3.50	100.63	1.30	0.789	5.12	A	ER	43.20	1.023	3.50	A	I	69.60	0.80	0.789	3.97	A	ER	43.20	
		EV3	43.000	4	2.30	98.90	1.30	0.789	3.36	A	ER	43.20	1.023	2.30	A	I	69.60	0.80	0.789	2.61	A	ER	43.20	

LOAD FACTORS:

DESIGN LOAD RATING FACTORS	LIMIT STATE	γDC	γDW
	STRENGTH I	1.25	1.50
	SERVICE III	1.00	1.00

NOTES:

MINIMUM RATING FACTORS ARE BASED ON THE STRENGTH I AND SERVICE III LIMIT STATES.

ALLOWABLE STRESSES FOR SERVICE III LIMIT STATE ARE AS REQUIRED FOR DESIGN.

COMMENTS:

1.

2.

3.

4.

(#) CONTROLLING LOAD RATING

1. DESIGN LOAD RATING (HL-93)
2. DESIGN LOAD RATING (HS-20)
3. LEGAL LOAD RATING * *
4. EMERGENCY VEHICLE LOAD RATING **

** SEE CHART FOR VEHICLE TYPE

GIRDER LOCATION

I - INTERIOR GIRDER
EL - EXTERIOR LEFT GIRDER
ER - EXTERIOR RIGHT GIRDER

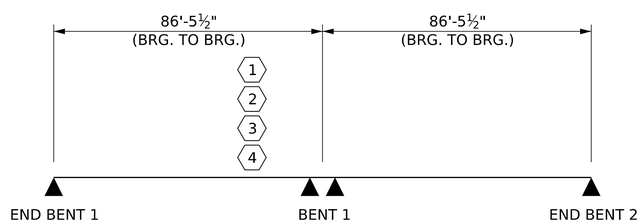

LRFR SUMMARY

PROJECT NO. I-5898
ROCKINGHAM COUNTY
STATION: 119+69.55 -Y-

DocuSigned by: Stephen T. Champion
Signature of Engineer
NORTH CAROLINA PROFESSIONAL SEAL 020123 ENGINEER STEPHEN T. CHAMPION
05/07/2024

STATE OF NORTH CAROLINA
DEPARTMENT OF TRANSPORTATION
RALEIGH

STANDARD

LRFR SUMMARY FOR PRESTRESSED CONCRETE GIRDERS

(NON-INTERSTATE TRAFFIC)

DOCUMENT NOT CONSIDERED FINAL UNLESS ALL SIGNATURES COMPLETED

Johnson, Mirmiran, & Thompson Inc.
4700 Falls of Neuse Rd, Suite 100,
Raleigh, NC, 27609
License No: C-3097

REVISIONS						SHEET NO.
NO.	BY:	DATE:	NO.	BY:	DATE:	S-5
1			3			TOTAL SHEETS
2			4			39

STD. NO. LRFR1

DWN. BY: WDC	DATE: 02/24	DRAWN BY : MAA 1/08	REV. 11/12/08RR	MAA/GM
CHKD. BY: GFW	DATE: 02/24	CHECKED BY : GM/DI 2/08	REV. 10/1/11	MAA/GM
DES. EGR. OF RECORD: STC	DATE: 02/24		REV. 04/23	BNB/AAI

wdcrutcher
DGN: pw:\\jmt-pw.bentley.com:jmt-pw-01\Documents\Projects\2016\6-0988-005\Design\Structures\PLANS\GDN\009_I-5898_SMU_LRFR_S05.dgn
TIME: 06:16 AM on Sunday, May 05, 2024

DocuSign Envelope ID: CFF976E0-6897-4697-83E4-E7CC4C08C579

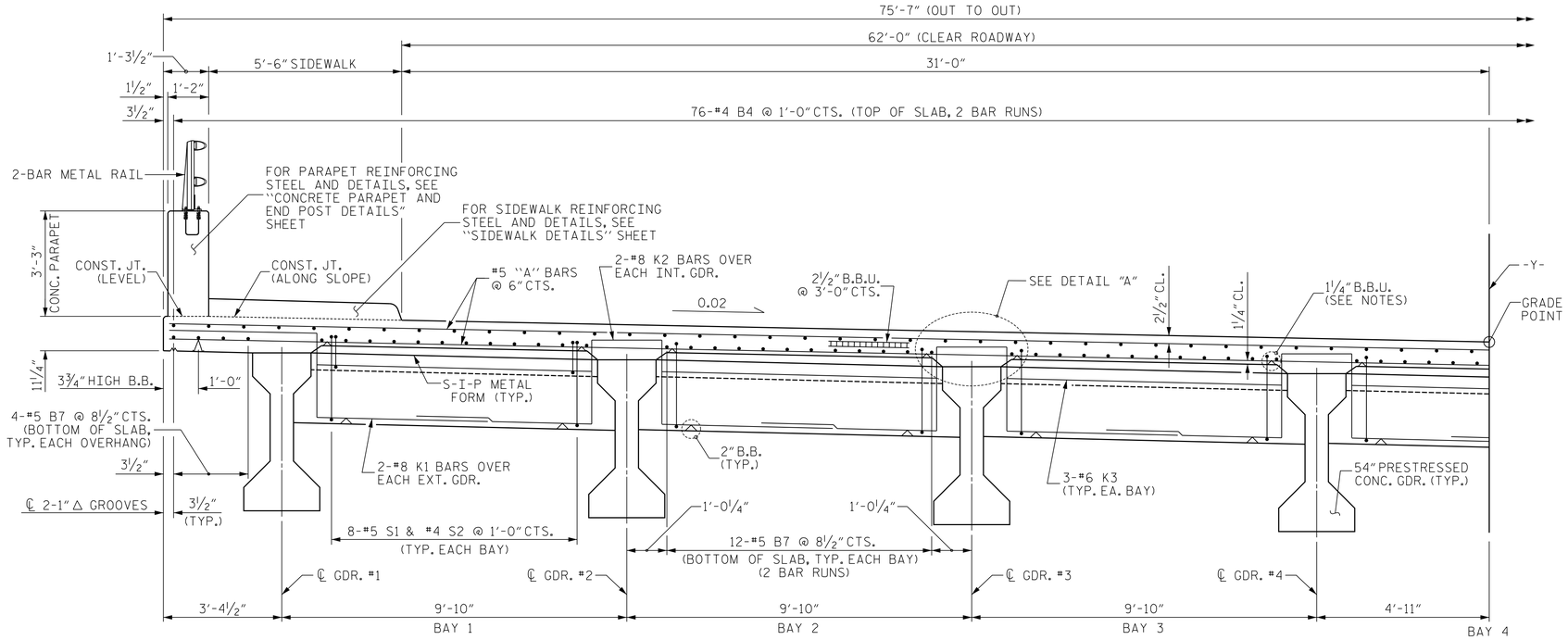

TYPICAL HALF SECTION

SHOWING END BENT DIAPHRAGMS

NOTES

PROVIDE 1¼" HIGH BEAM BOLSTERS UPPER (B.B.U.) AT 4'-0" CTS. ATOP THE METAL STAY-IN-PLACE FORMS TO SUPPORT THE BOTTOM MAT OF 'A' BARS. WHEN USING REMOVABLE FORMS, PROVIDE CONTINUOUS HIGH CHAIRS FOR METAL DECK (C.H.C.M.) @ 4'-0" CTS. WITH A HEIGHT TO SUPPORT THE BOTTOM MAT OF 'A' BARS A CLEAR DISTANCE OF 2½" ABOVE THE TOP OF THE REMOVABLE FORM.

LONGITUDINAL STEEL MAY BE SHIFTED SLIGHTLY, AS NECESSARY, TO AVOID INTERFERENCE WITH STIRRUPS IN PRESTRESSED CONCRETE GIRDERS.

PREVIOUSLY CAST CONCRETE IN A CONTINUOUS UNIT SHALL HAVE ATTAINED A MINIMUM COMPRESSIVE STRENGTH OF 3000 PSI BEFORE ADDITIONAL CONCRETE IS CAST IN THE UNIT.

METAL STAY-IN-PLACE FORMS SHALL NOT BE WELDED TO THE GIRDER FLANGES IN THE REGION OF THE LINK SLAB.

PARAPET AND SIDEWALK IN EACH SPAN SHALL NOT BE CAST UNTIL ALL SLAB CONCRETE IN THAT SPAN HAS BEEN CAST AND HAS REACHED A MINIMUM COMPRESSIVE STRENGTH OF 3,000 PSI.

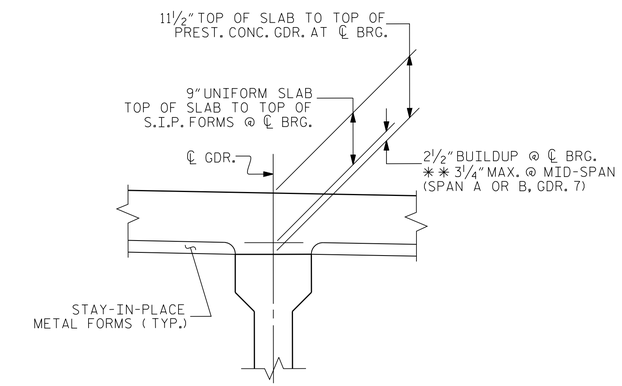

DETAIL "A"

** BASED ON PREDICTED FINAL CAMBER AND THEORETICAL GRADE LINE ELEVATIONS.

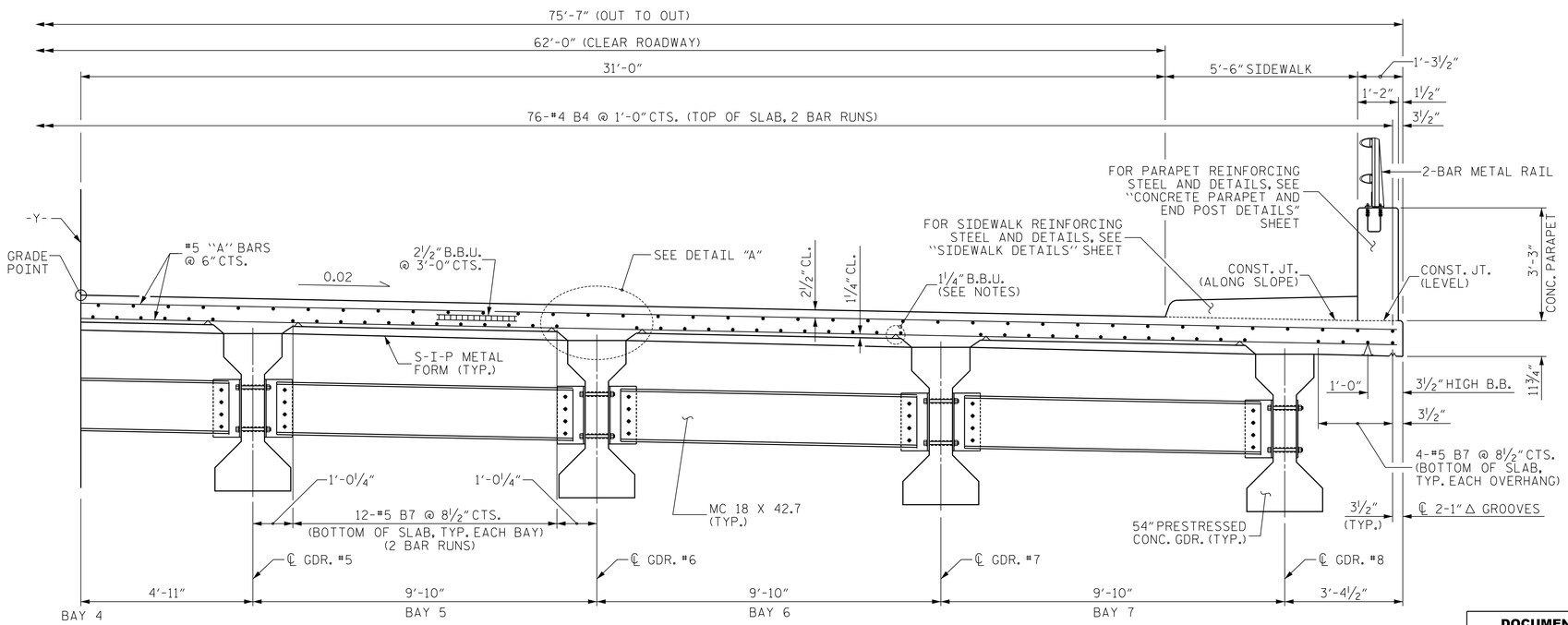

TYPICAL HALF SECTION

SHOWING INTERMEDIATE DIAPHRAGMS

PROJECT NO. I-5898

ROCKINGHAM COUNTY

STATION: 119+69.55 -Y-

SHEET 1 OF 2

DocuSigned by: Stephen T. Champion
NORTH CAROLINA PROFESSIONAL SEAL 020123 ENGINEER STEPHEN T. CHAMPION
05/07/2024

STATE OF NORTH CAROLINA
DEPARTMENT OF TRANSPORTATION
RALEIGH

SUPERSTRUCTURE

TYPICAL SECTION

DOCUMENT NOT CONSIDERED FINAL UNLESS ALL SIGNATURES COMPLETED

Johnson, Mirmiran, & Thompson Inc.
4700 Falls of Neuse Rd, Suite 100,
Raleigh, NC, 27609
License No: C-3097

REVISIONS								SHEET NO.
NO.	BY:	DATE:	NO.	BY:	DATE:			S-6
1			3					TOTAL SHEETS
2			4					39

DWN. BY: WDC	DATE: 02/24
CHKD. BY: GFW	DATE: 02/24
DES. EGR. OF RECORD: STC	DATE: 02/24

wdcrutcher
DGN: Dev:\\jmt-pw.bentley.com;jmt-pw-01\Documents\Projects\2016\6-0988-005\Design\Structures\PLANS\GDN\I-5898_SMU_TS01_S06.dgn
TIME: Date: AM on Sunday, May 05, 2024

DocuSign Envelope ID: CFF976E0-6897-4697-83E4-E7CC4C08C579

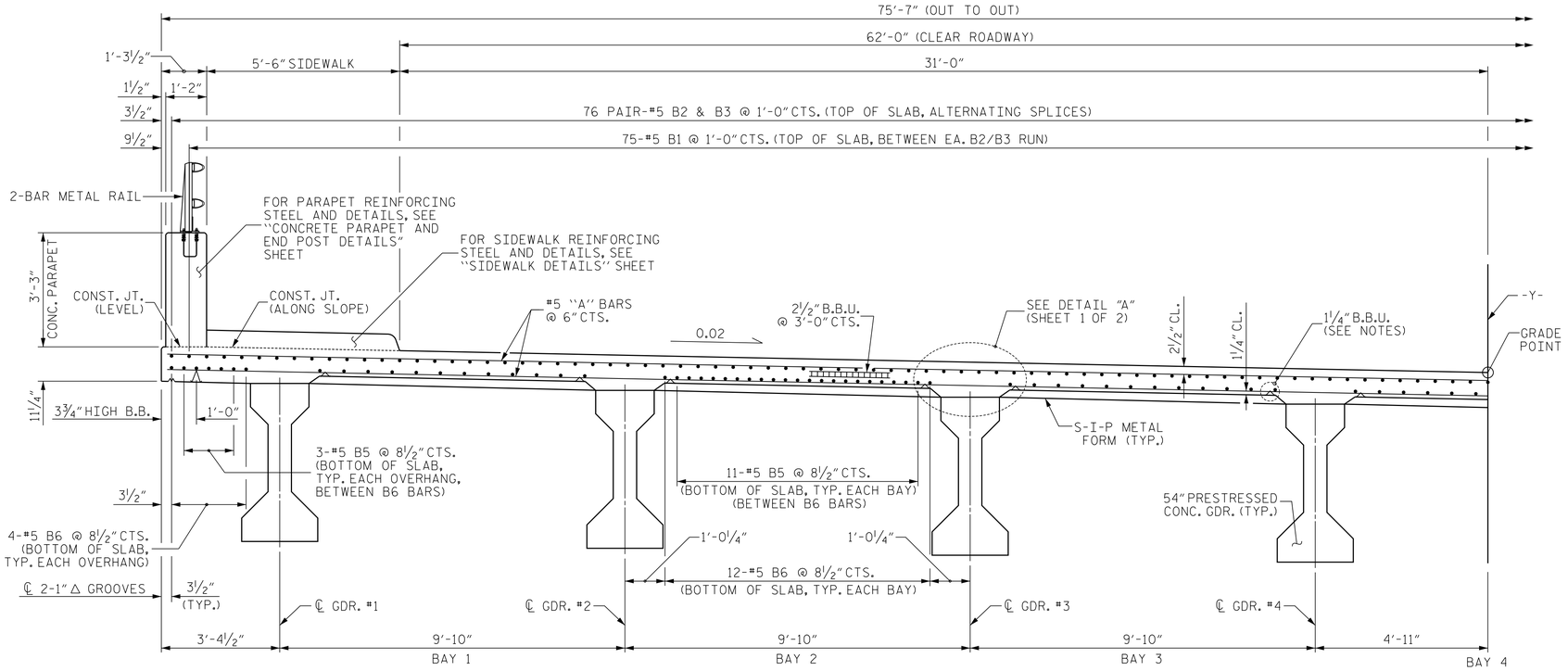

TYPICAL HALF SECTION

SHOWING LINK SLAB AREA OVER BENT

✱ MEASURED ALONG ℄ GIRDER

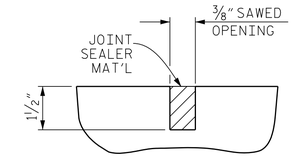

DETAIL "B"

A 1½" DEEP, ⅜" WIDE CONTRACTION JOINT AT BENT CONTROL LINE SHALL BE SAWN WITHIN 24 HOURS OF POURING THE DECK. THE JOINT SHALL BE FILLED WITH JOINT SEALER MATERIAL. THE JOINT SEALER MATERIAL SHALL CONFORM TO THE REQUIREMENTS OF SECTION 1028-3 OF THE STANDARD SPECIFICATIONS.

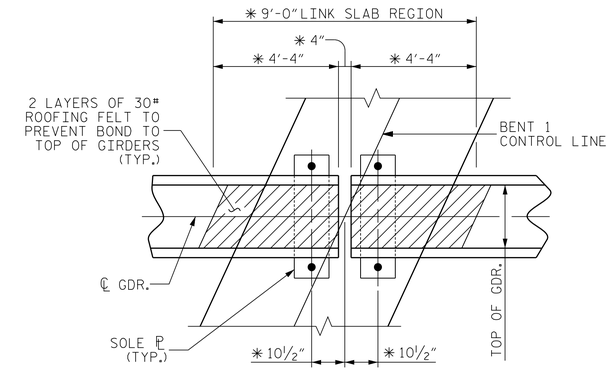

PLAN OF BENT AT LINK SLAB

THE TOP OF GIRDER IN THE AREA OF THE LINK SLAB SHALL BE SMOOTH (NOT RAKED) AND FREE OF STIRRUPS, DECK FORMING ATTACHMENTS, AND OVERHANG FALSEWORK ATTACHMENTS.

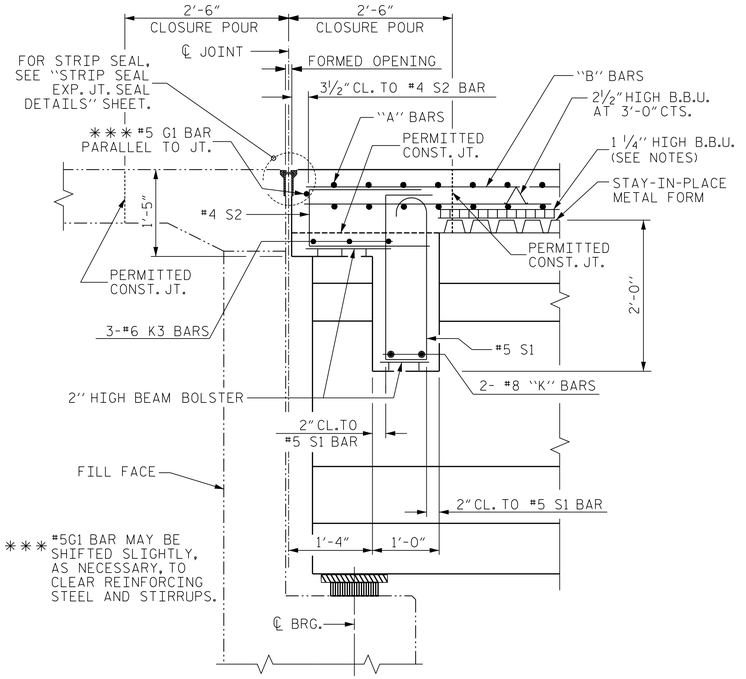

SECTION THRU END BENT

(END BENT 1 SHOWN, END BENT 2 SIMILAR)

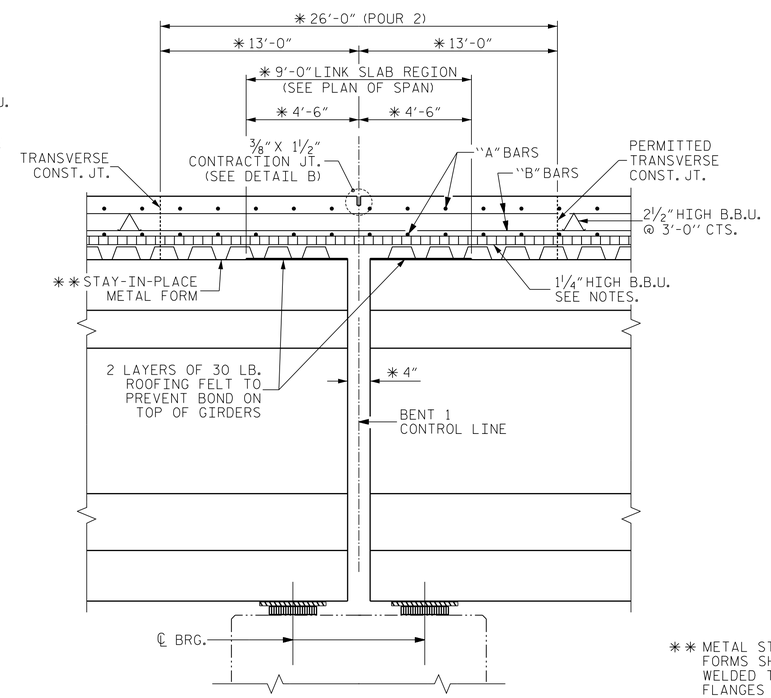

SECTION THRU BENT AT LINK SLAB

(SECTION SHOWN ALONG ℄ GIRDER)

✱✱ METAL STAY-IN-PLACE FORMS SHALL NOT BE WELDED TO THE GIRDER FLANGES IN THE REGION OF THE LINK SLAB.

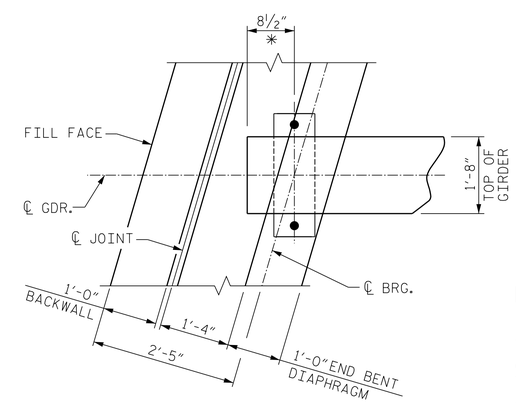

PLAN AT END BENT

(END BENT 1 SHOWN, END BENT 2 SIMILAR)

DocuSigned by: Stephen T. Champion

NORTH CAROLINA PROFESSIONAL SEAL 020123 ENGINEER STEPHEN T. CHAMPION 05/07/2024

PROJECT NO. I-5898

ROCKINGHAM COUNTY

STATION: 119+69.55 -Y-

SHEET 2 OF 2

STATE OF NORTH CAROLINA
DEPARTMENT OF TRANSPORTATION
RALEIGH

SUPERSTRUCTURE

TYPICAL SECTION

REVISIONS						SHEET NO.
NO.	BY:	DATE:	NO.	BY:	DATE:	S-7
1			3			TOTAL SHEETS
2			4			39

DOCUMENT NOT CONSIDERED FINAL UNLESS ALL SIGNATURES COMPLETED

Johnson, Mirmiran, & Thompson Inc.
4700 Falls of Neuse Rd, Suite 100,
Raleigh, NC, 27609
License No: C-3097

DWN. BY: WDC	DATE: 02/24
CHKD. BY: GFW	DATE: 02/24
DES. EGR. OF RECORD: STC	DATE: 02/24

wdcrutcher
DGN: pw:\\mt-pw.bentley.com:mt-pw-01\Documents\Projects\2016\6-0988-005\Design\Structures\PLANS\GDN\013_I-5898_SMU_TS02_S07.dgn
TIME: Date: AM on Sunday, May 05, 2024

DocuSign Envelope ID: CFF976E0-6897-4697-83E4-E7CC4C08C579

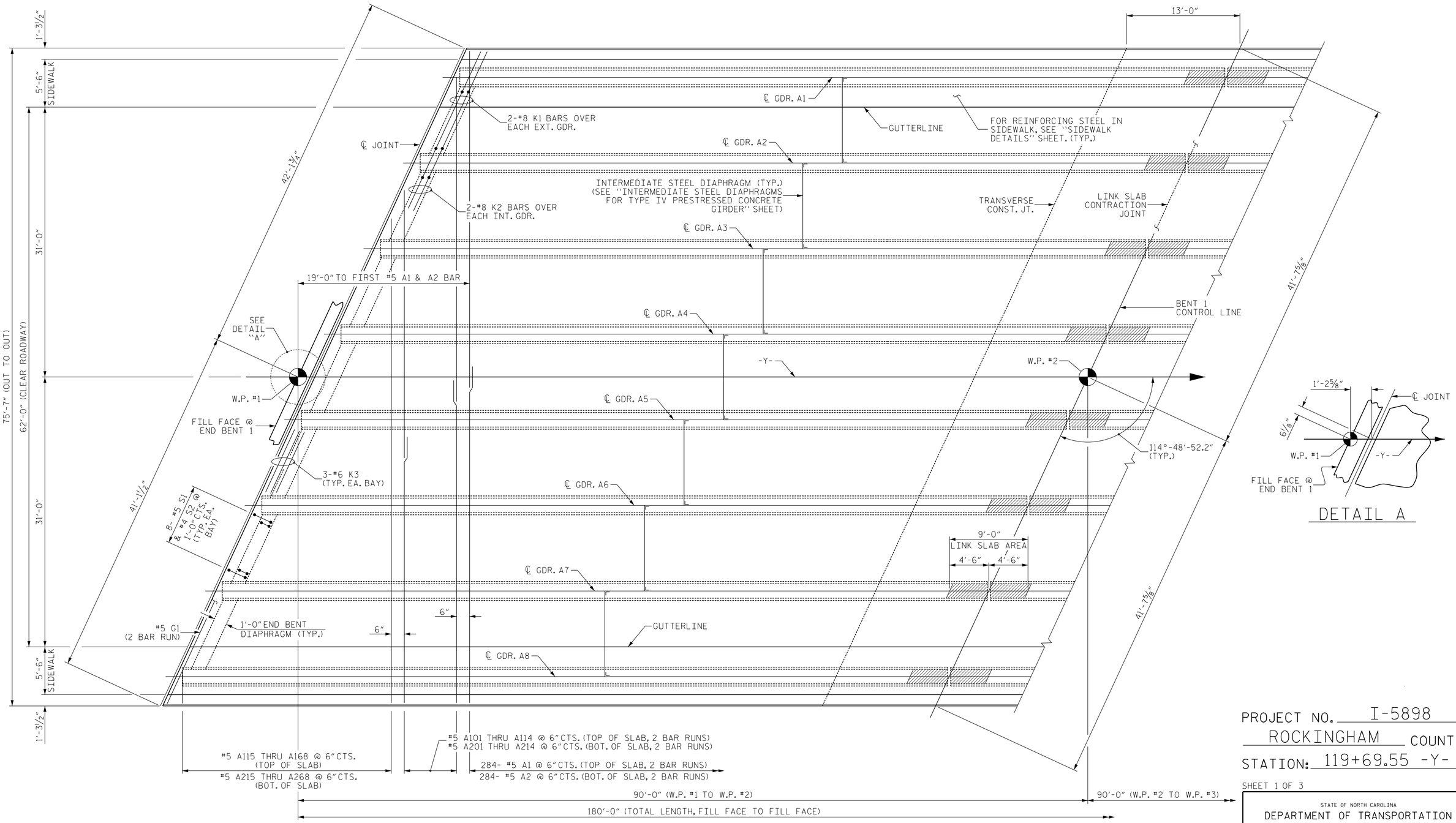

DETAIL A

PLAN OF SPAN A

(FOR TOP & BOTTOM "B" BARS, SEE "B-BAR LAYOUT" SHEET)

PROJECT NO. I-5898

ROCKINGHAM COUNTY

STATION: 119+69.55 -Y-

SHEET 1 OF 3

STATE OF NORTH CAROLINA
DEPARTMENT OF TRANSPORTATION
RALEIGH

SUPERSTRUCTURE

PLAN OF SPAN A

DocuSigned by: Stephen T. Champion

NORTH CAROLINA PROFESSIONAL SEAL 020123 ENGINEER STEPHEN T. CHAMPION
5/10/2024

DOCUMENT NOT CONSIDERED FINAL UNLESS ALL SIGNATURES COMPLETED

Johnson, Mirmiran, & Thompson Inc.
4700 Falls of Neuse Rd, Suite 100,
Raleigh, NC, 27609
License No: C-3097

REVISIONS						SHEET NO.
NO.	BY:	DATE:	NO.	BY:	DATE:	S-8
1			3			TOTAL SHEETS
2			4			39

DWN. BY: WDC	DATE: 02/24
CHKD. BY: GFW	DATE: 02/24
DES. EGR. OF RECORD: STC	DATE: 02/24

w:\structur
DGN: pw:\\mt-pw.bentley.com:_mt-pw-01\Documents\Projects\2016\6-0988-005\Design\Structures\PLANS\D06\015_I-5898_SMU_PS01_S08.dgn
TIME: 06:46 AM on Sunday, May 05, 2024

DocuSign Envelope ID: CFF976E0-6897-4697-83E4-E7CC4C08C579

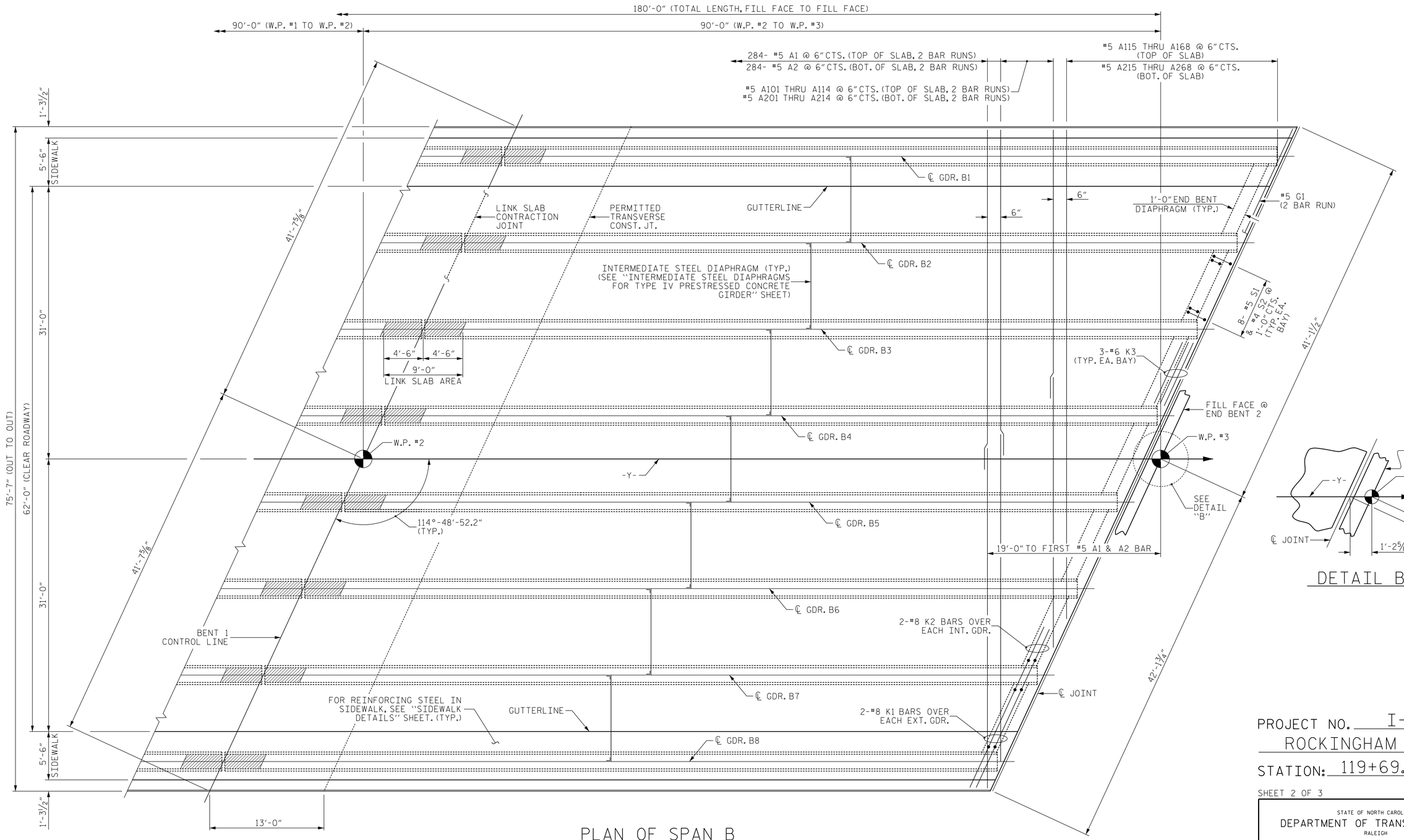

PLAN OF SPAN B

(FOR TOP & BOTTOM "B" BARS, SEE "B-BAR LAYOUT" SHEET)

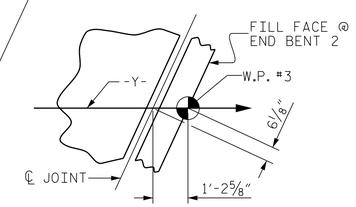

DETAIL B

PROJECT NO. I-5898

ROCKINGHAM COUNTY

STATION: 119+69.55 -Y-

SHEET 2 OF 3

STATE OF NORTH CAROLINA
DEPARTMENT OF TRANSPORTATION
RALEIGH

SUPERSTRUCTURE

PLAN OF SPAN B

DocuSigned by: Stephen T. Champion
NORTH CAROLINA PROFESSIONAL SEAL 020123 ENGINEER STEPHEN T. CHAMPION
03/07/2024

DOCUMENT NOT CONSIDERED FINAL UNLESS ALL SIGNATURES COMPLETED

Johnson, Mirmiran, & Thompson Inc.
4700 Falls of Neuse Rd, Suite 100,
Raleigh, NC, 27609
License No: C-3097

REVISIONS						SHEET NO.
NO.	BY:	DATE:	NO.	BY:	DATE:	S-9
1			3			TOTAL SHEETS
2			4			39

DWN. BY: WDC	DATE: 02/24
CHKD. BY: GFW	DATE: 02/24
DES. EGR. OF RECORD: STC	DATE: 02/24

wdcrutcher
DGN: pw:\\jmt-pw.bentley.com:jmt-pw-01\Documents\Projects\2016\6-0988-005\Design\Structures\PLANS\DGN\017_I-5898_SMU_PS02_S09.dgn
TIME: 06:46 AM on Sunday, May 05, 2024

DocuSign Envelope ID: CFF976E0-6897-4697-83E4-E7CC4C08C579

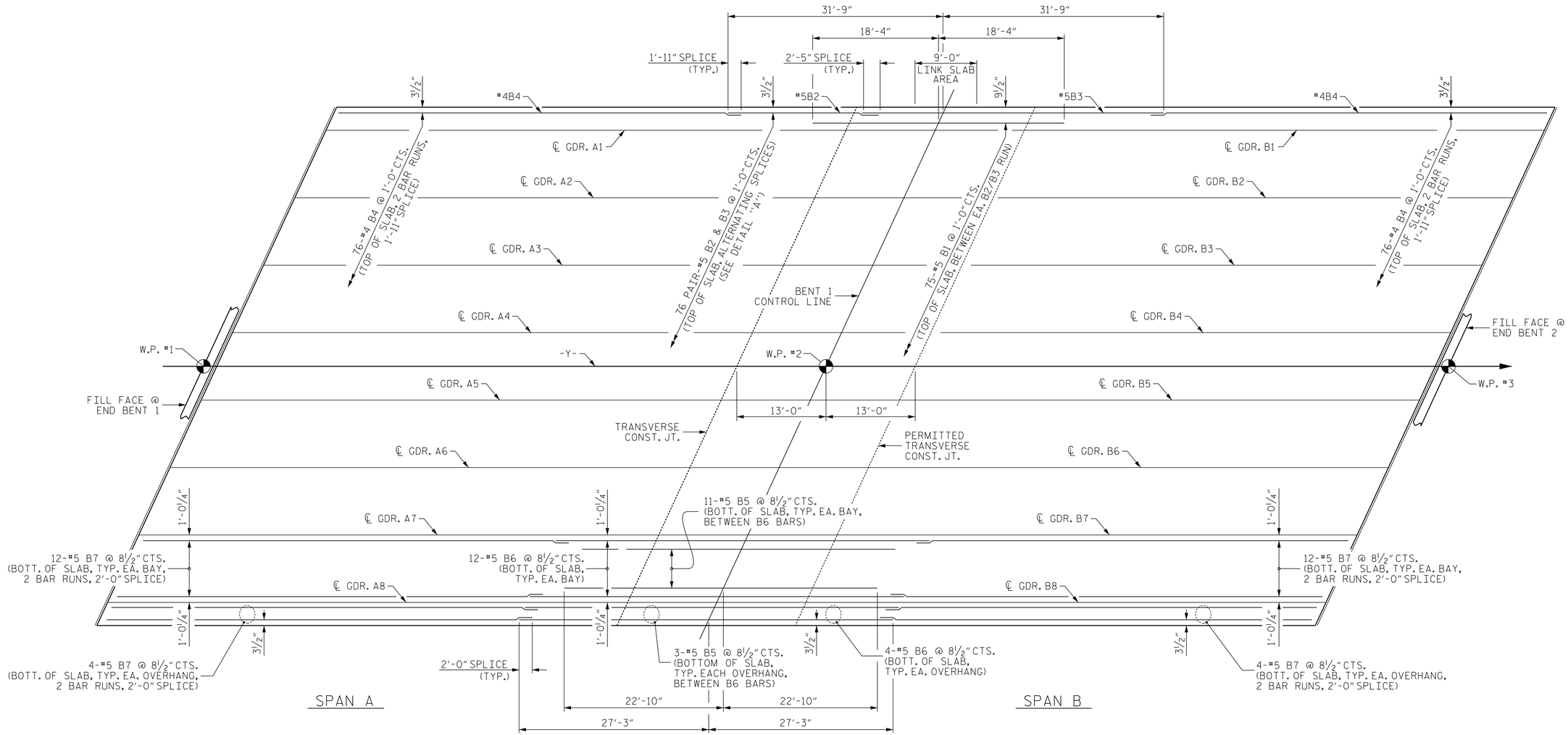

B-BAR LAYOUT PLAN

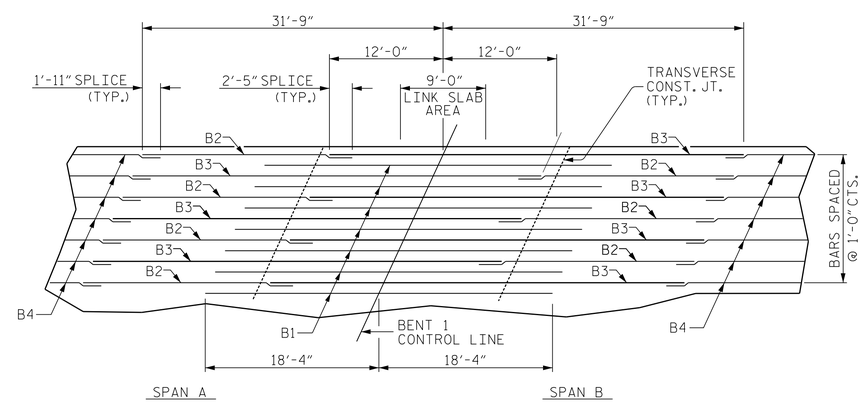

DETAIL "A"

(SHOWING TOP MAT OF STEEL OVER BENT)

PROJECT NO. I-5898

ROCKINGHAM COUNTY

STATION: 119+69.55 -Y-

SHEET 3 OF 3

DocuSigned by: Stephen T. Champion

NORTH CAROLINA PROFESSIONAL SEAL 020123 ENGINEER STEPHEN T. CHAMPION 05/07/2024

STATE OF NORTH CAROLINA
DEPARTMENT OF TRANSPORTATION
RALEIGH

SUPERSTRUCTURE

PLAN OF SPANS
B-BAR LAYOUT

DOCUMENT NOT CONSIDERED FINAL UNLESS ALL SIGNATURES COMPLETED

Johnson, Mirmiran, & Thompson Inc.
4700 Falls of Neuse Rd, Suite 100,
Raleigh, NC, 27609
License No: C-3097

REVISIONS						SHEET NO.
NO.	BY:	DATE:	NO.	BY:	DATE:	S-10
1			3			TOTAL SHEETS
2			4			39

DWN. BY: WDC	DATE: 02/24
CHKD. BY: GFW	DATE: 02/24
DES. EGR. OF RECORD: STC	DATE: 02/24

w:\crutcher
DGN: pw:\\mt-pw.bentley.com:mt-pw-01\Documents\Proj\sct\2016\6-0998-005\Design\Structures\PLANS\DGN\09_I-5898_SMU_PS03_S10.dgn
TIME: 06:17 AM on Sunday, May 05, 2024

DocuSign Envelope ID: CFF976E0-6897-4697-83E4-E7CC4C08C579

NOTES

THE CONCRETE AND REINFORCING STEEL REQUIRED FOR THE SIDEWALKS ON THE BRIDGE DECK IS INCLUDED IN THE SUPERSTRUCTURE BILL OF MATERIAL AND PAYMENT IS INCLUDED IN THE SQUARE FOOT PRICE BID FOR "REINFORCED CONCRETE DECK SLAB".

THE #4 "U" BARS MAY BE PUSHED INTO GREEN CONCRETE AFTER SPAN HAS BEEN SCREEDED OFF.

SIDEWALK IN A CONTINUOUS UNIT SHALL NOT BE CAST UNTIL ALL SLAB CONCRETE IN THE UNIT HAS BEEN CAST AND HAS REACHED A MINIMUM COMPRESSIVE STRENGTH OF 3000 PSI.

THE JOINT IN THE DECK AT THE END BENTS SHALL BE FORMED PRIOR TO THE CASTING OF THE SIDEWALKS.

ALL REINFORCING STEEL IN SIDEWALKS SHALL BE EPOXY COATED.

GROOVED CONTRACTION JOINTS, 1/2" IN DEPTH, SHALL BE TOOLED IN ALL EXPOSED FACES OF THE SIDEWALK IN ACCORDANCE WITH ARTICLE 825-10(B) OF THE STANDARD SPECIFICATIONS. THE CONTRACTION JOINTS SHALL BE LOCATED AT A SPACING OF 8 FEET TO 10 FEET BETWEEN EXPANSION JOINTS. NO CONTRACTION JOINT WILL BE REQUIRED FOR SEGMENTS LESS THAN 10 FEET IN LENGTH.

FOR SIDEWALK DETAILS ON APPROACH SLABS, SEE BRIDGE APPROACH SLAB SHEETS.

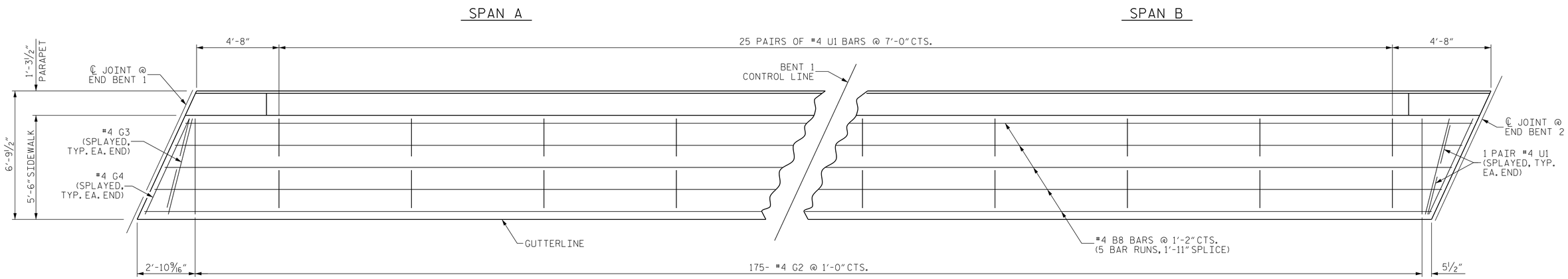

PLAN OF SIDEWALK

LEFT SIDE SHOWN, RIGHT SIDE SIMILAR)

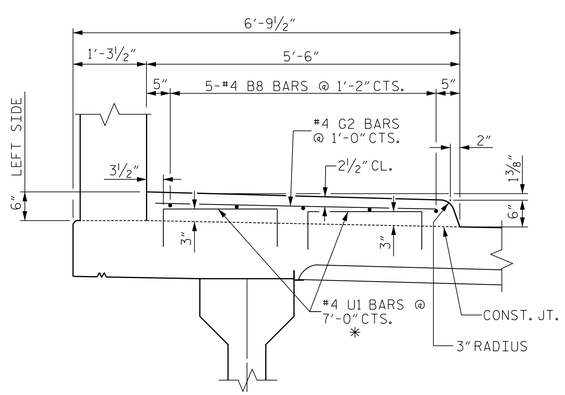

SECTION THRU SIDEWALK

(LEFT SIDE)

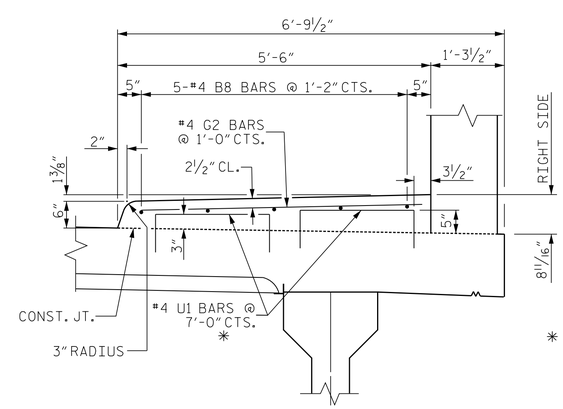

SECTION THRU SIDEWALK

(RIGHT SIDE)

* U1 BARS MAY BE PUSHED INTO GREEN CONCRETE AFTER SPAN HAS BEEN SCREEDED OFF.

PROJECT NO. I-5898
ROCKINGHAM COUNTY
STATION: 119+69.55 -Y-

DocuSigned by: Stephen T. Champion
NORTH CAROLINA PROFESSIONAL SEAL 020123 ENGINEER STEPHEN T. CHAMPION
6/6/2024

STATE OF NORTH CAROLINA
DEPARTMENT OF TRANSPORTATION
RALEIGH

SUPERSTRUCTURE

SIDEWALK DETAILS

REVISIONS						SHEET NO.
NO.	BY:	DATE:	NO.	BY:	DATE:	S-11
1			3			TOTAL SHEETS
2			4			39

DOCUMENT NOT CONSIDERED FINAL UNLESS ALL SIGNATURES COMPLETED

Johnson, Mirmiran, & Thompson Inc.
4700 Falls of Neuse Rd, Suite 100,
Raleigh, NC, 27609
License No: C-3097

DWN. BY: WDC	DATE: 02/24
CHKD. BY: GFW	DATE: 02/24
DES. EGR. OF RECORD: STC	DATE: 02/24

wdcrutcher
DGN: pw:\\jmt-pw.bentley.com:jmt-pw-01\Documents\Projects\2016\16-0988-005\Design\Structures\PLANS\GEN\02J_I-5898_SM01_SW01_S11.dgn
TIME: Ø6:11 AM on Sunday, May 05, 2024

DocuSign Envelope ID: CFF976E0-6897-4697-83E4-E7CC4C08C579

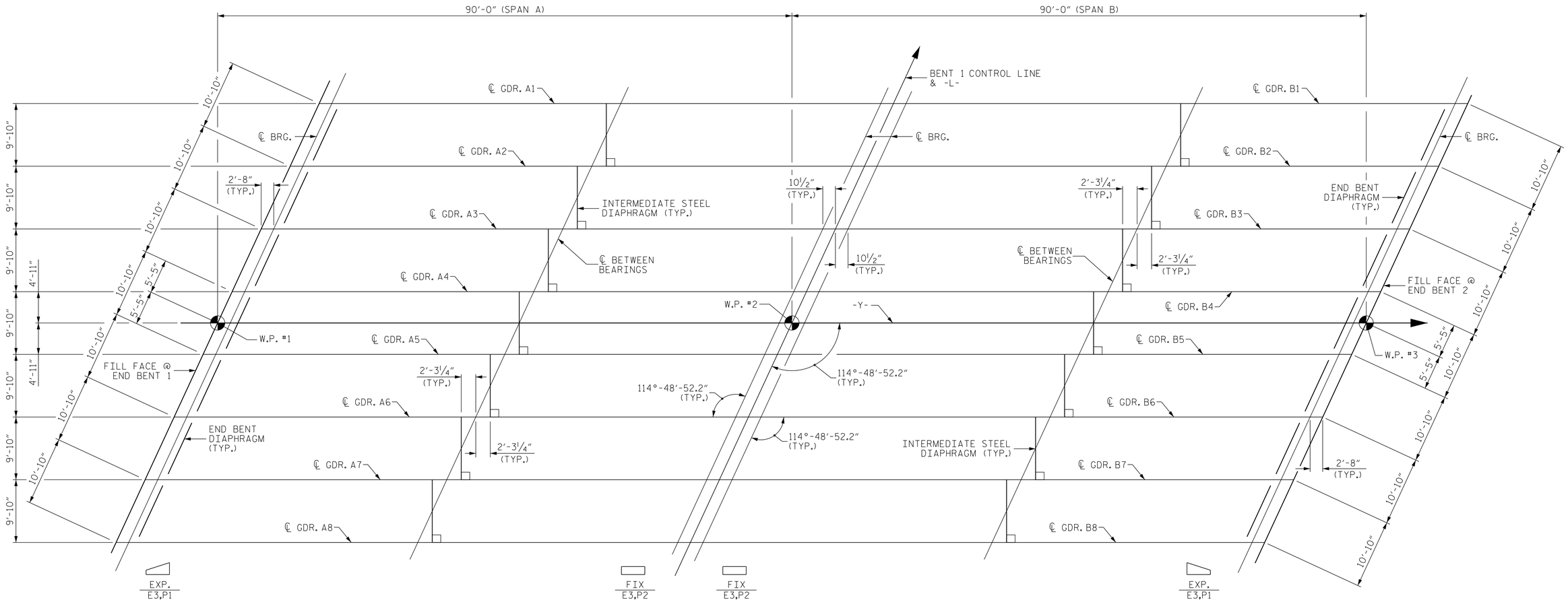

FRAMING PLAN

PROJECT NO. I-5898

ROCKINGHAM COUNTY

STATION: 119+69.55 -Y-

DocuSigned by: Stephen T. Champion

NORTH CAROLINA PROFESSIONAL SEAL 020123 ENGINEER STEPHEN T. CHAMPION

05/07/2024

STATE OF NORTH CAROLINA
DEPARTMENT OF TRANSPORTATION
RALEIGH

SUPERSTRUCTURE

FRAMING PLAN

DOCUMENT NOT CONSIDERED FINAL UNLESS ALL SIGNATURES COMPLETED

Johnson, Mirmiran, & Thompson Inc.
4700 Falls of Neuse Rd, Suite 100,
Raleigh, NC, 27609
License No: C-3097

REVISIONS						SHEET NO.
NO.	BY:	DATE:	NO.	BY:	DATE:	S-12
1			3			TOTAL SHEETS
2			4			39

DWN. BY: WDC	DATE: 02/24
CHKD. BY: GFW	DATE: 02/24
DES. EGR. OF RECORD: STC	DATE: 02/24

w:\ctr\ctr
DGN: pw:\\jmt-pw.bentley.com:jmt-pw-01\Documents\Projects\2016\16-0988-005\Design\Structures\PLANS\DGN\023_I-5898_SMU_FP01_S12.dgn
TIME: 08:17 AM on Sunday, May 05, 2024

DocuSign Envelope ID: CFF976E0-6897-4697-83E4-E7CC4C08C579

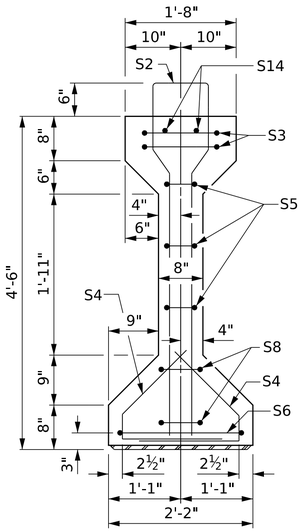

SECTION A-A

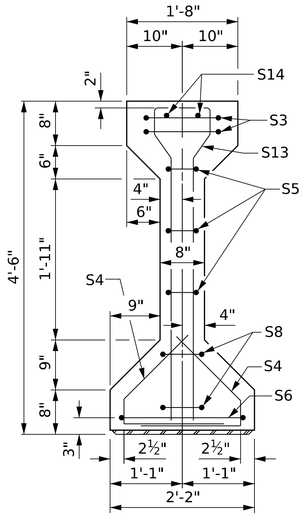

SECTION B-B

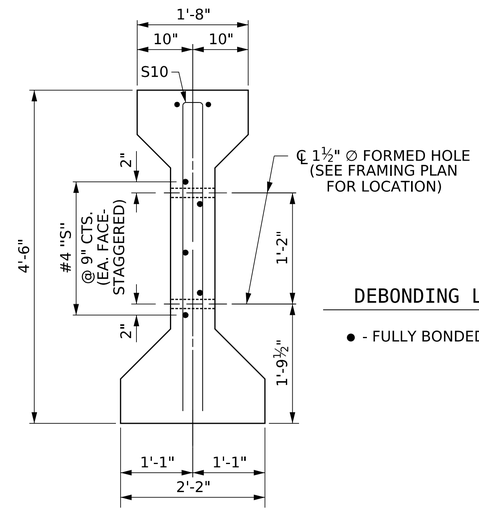

SECTION C-C

(S1 BARS NOT SHOWN)

DEBONDING LEGEND

● - FULLY BONDED STRANDS

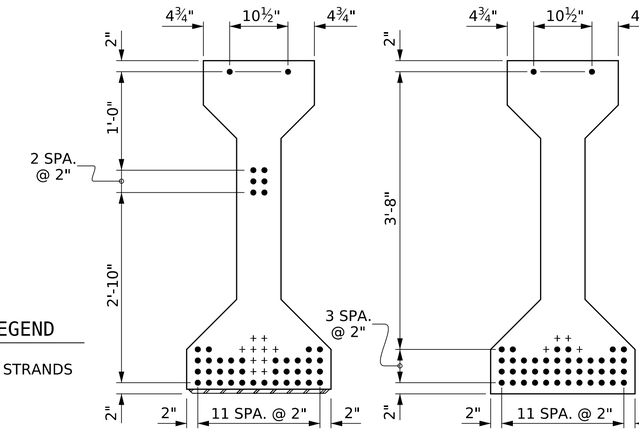

0.6" ∅ LOW RELAXATION STRAND LAYOUT

0.6"∅ L.R. GRADE 270 STRANDS

AREA (SQUARE INCHES)	ULTIMATE STRENGTH (LBS. PER STRAND)	APPLIED PRESTRESS (LBS. PER STRAND)
0.217	58,600	43,950

REINFORCING STEEL FOR ONE GIRDER

BAR	NUMBER	SIZE	TYPE	LENGTH	WEIGHT
S1	67	#4	1	10'-8"	477
S2	8	#6	1	10'-8"	128
S3	4	#4	2	9'-1"	24
S4	68	#4	3	3'-5"	155
S5	6	#4	2	8'-5"	34
S6	2	#4	2	9'-11"	13
S8	4	#4	2	8'-7"	23
EXTERIOR GDR. S10	2	#5	2	8'-8"	18
INTERIOR GDR. S10	4	#5	2	8'-8"	36
EXTERIOR GDR. S11	5	#4	STR	7'-0"	23
INTERIOR GDR. S12	5	#4	STR	11'-7"	39
S13	14	#6	1	9'-4"	196
S14	4	#5	STR	45'-0"	188

BAR TYPES

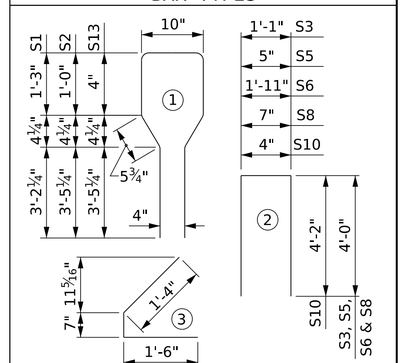

ALL BAR DIMENSIONS ARE OUT-TO-OUT

QUANTITIES FOR ONE GIRDER

	REINFORCING STEEL LB.	8800 PSI CONCRETE C.Y.	0.6" ∅ L. R. STRANDS No.
EXT. GIRDER	1279	17.8	44
INT. GIRDER	1313	17.8	44

GIRDERS REQUIRED

	NUMBER	LENGTH	TOTAL LENGTH
SPAN A	8	87.875	703.00
SPAN B	8	87.875	703.00
TOTAL	16		1406.00

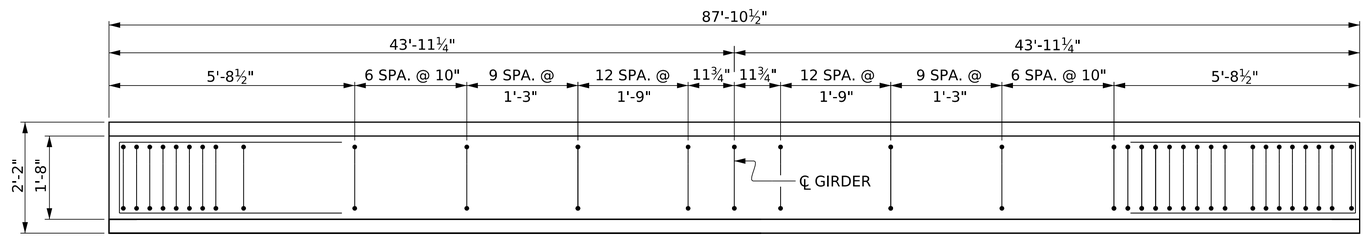

PLAN OF GIRDER

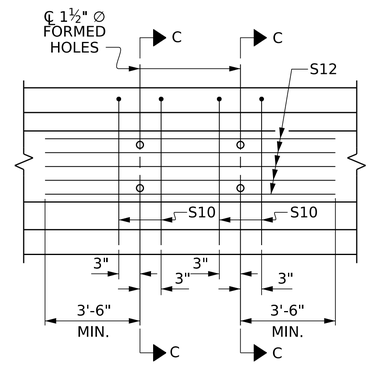

PARTIAL ELEVATION

SHOWING INTERMEDIATE DIAPHRAGM REINFORCING STEEL FOR GIRDER Nos. 2 THRU 7

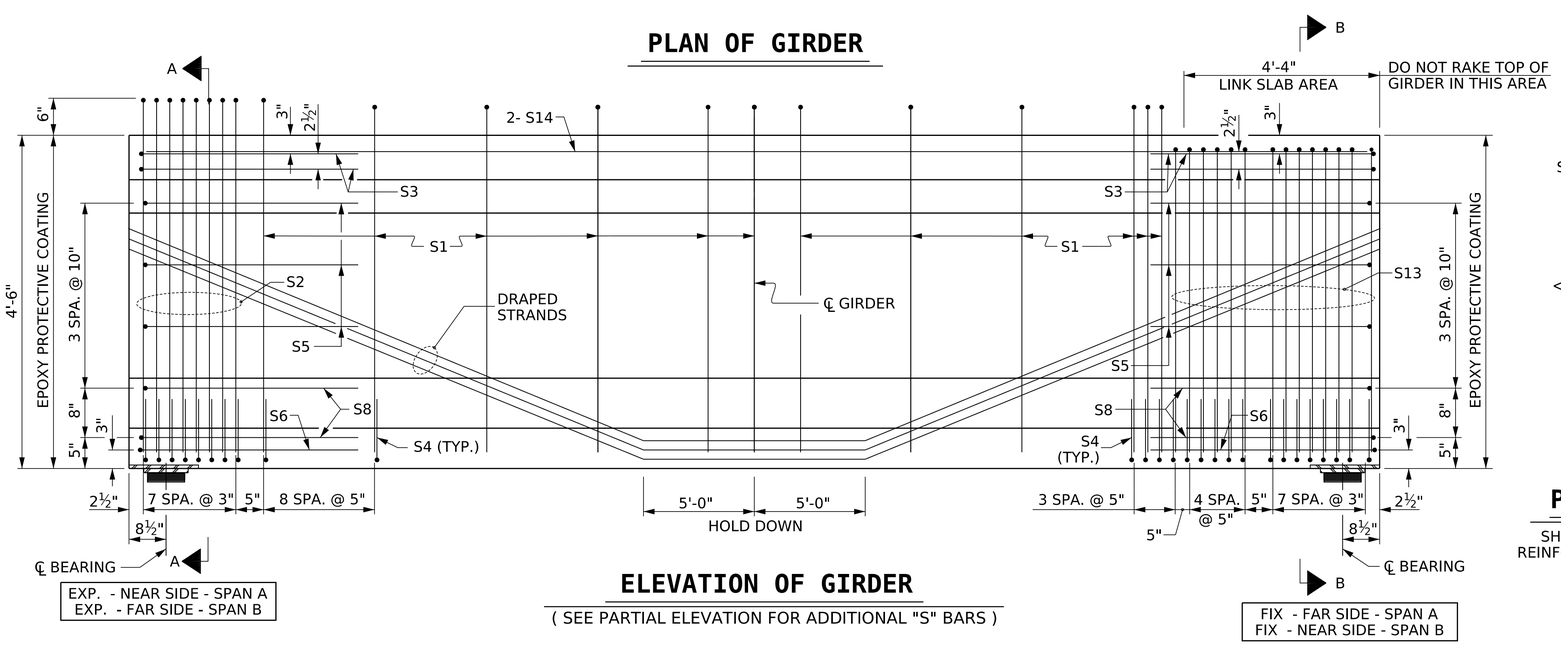

EXP. - NEAR SIDE - SPAN A
EXP. - FAR SIDE - SPAN B

FIX - FAR SIDE - SPAN A
FIX - NEAR SIDE - SPAN B

ELEVATION OF GIRDER

(SEE PARTIAL ELEVATION FOR ADDITIONAL "S" BARS)

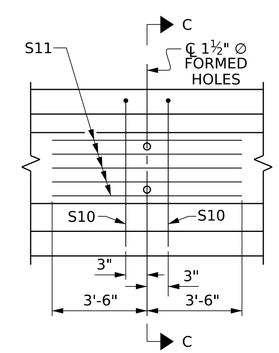

PARTIAL ELEVATION

SHOWING INTERMEDIATE DIAPHRAGM REINFORCING STEEL FOR GIRDER Nos. 1 & 8

PROJECT NO. I-5898

ROCKINGHAM COUNTY

STATION: 119+69.55 -Y-

SHEET 1 OF 3

STATE OF NORTH CAROLINA
DEPARTMENT OF TRANSPORTATION
RALEIGH

STANDARD

AASHTO TYPE IV PRESTRESSED CONCRETE GIRDER - LINK SLAB

SPAN A & SPAN B

DocuSigned by: Stephen T. Champion
NORTH CAROLINA PROFESSIONAL SEAL 020123 ENGINEER STEPHEN T. CHAMPION
5/7/2024

DOCUMENT NOT CONSIDERED FINAL UNLESS ALL SIGNATURES COMPLETED

Johnson, Mirmiran, & Thompson Inc.
4700 Falls of Neuse Rd, Suite 100,
Raleigh, NC, 27609
License No: C-3097

REVISIONS							SHEET NO.
NO.	BY:	DATE:	NO.	BY:	DATE:		S-13
1			3				TOTAL SHEETS
2			4				39

DWN. BY: WDC	DATE: 02/24	DRAWN BY : BNB 09/21	
CHKD. BY: GFW	DATE: 02/24	CHECKED BY : AAI 09/21	
DES. EGR. OF RECORD: STC	DATE: 02/24		

wdcrafter
DGN: pw:\\jmt-pw.bentley.com:jmt-pw-01\Documents\Projects\2016\6-0988-005\Design\Structures\PLANS\DGN\025_I-5898_SMU_G01_S13.dgn
TIME: 06:17 AM on Sunday, May 05, 2024

STD. NO. PCG6 (SHT. 1)

Docusign Envelope ID: 9B85712E-1E0F-40F5-88A6-093A89BC0514

DEAD LOAD DEFLECTION TABLE FOR GIRDERS

0.6"Ø LOW RELAXATION	SPAN A OR B - GIRDERS 1, 4, 5, 8																				
TWENTIETH POINTS	BRG.	0.05	0.10	0.15	0.20	0.25	0.30	0.35	0.40	0.45	0.50	0.55	0.60	0.65	0.70	0.75	0.80	0.85	0.90	0.95	BRG.
CAMBER (GIRDER IN PLACE) ↑	0	0.041	0.081	0.118	0.153	0.183	0.209	0.230	0.245	0.254	0.257	0.254	0.245	0.230	0.209	0.183	0.153	0.118	0.081	0.041	0
✳ DEFLECTION DUE TO SUPERIMPOSED D.L. ↓	0	0.015	0.030	0.045	0.060	0.072	0.083	0.091	0.098	0.101	0.103	0.101	0.098	0.091	0.083	0.072	0.060	0.045	0.030	0.015	0
FINAL CAMBER ↑	0	5/16	5/8	7/8	1 1/8	1 5/16	1 1/2	1 11/16	1 3/4	1 13/16	1 7/8	1 13/16	1 3/4	1 11/16	1 1/2	1 5/16	1 1/8	7/8	5/8	5/16	0

✳ INCLUDES FUTURE WEARING SURFACE.
ALL VALUES ARE SHOWN IN FEET (DECIMAL FORM), EXCEPT "FINAL CAMBER", WHICH IS GIVEN IN INCHES (FRACTION FORM).

DEAD LOAD DEFLECTION TABLE FOR GIRDERS

0.6"Ø LOW RELAXATION	SPAN A OR B - GIRDERS 2, 3, 6, 7																				
TWENTIETH POINTS	BRG.	0.05	0.10	0.15	0.20	0.25	0.30	0.35	0.40	0.45	0.50	0.55	0.60	0.65	0.70	0.75	0.80	0.85	0.90	0.95	BRG.
CAMBER (GIRDER IN PLACE) ↑	0	0.041	0.081	0.118	0.153	0.183	0.209	0.230	0.245	0.254	0.257	0.254	0.245	0.230	0.209	0.183	0.153	0.118	0.081	0.041	0
✳ DEFLECTION DUE TO SUPERIMPOSED D.L. ↓	0	0.016	0.033	0.049	0.065	0.078	0.091	0.099	0.107	0.109	0.112	0.109	0.107	0.099	0.091	0.078	0.065	0.049	0.033	0.016	0
FINAL CAMBER ↑	0	5/16	9/16	13/16	1 1/16	1 1/4	1 7/16	1 9/16	1 11/16	1 3/4	1 3/4	1 3/4	1 11/16	1 9/16	1 7/16	1 1/4	1 1/16	13/16	9/16	5/16	0

✳ INCLUDES FUTURE WEARING SURFACE.
ALL VALUES ARE SHOWN IN FEET (DECIMAL FORM), EXCEPT "FINAL CAMBER", WHICH IS GIVEN IN INCHES (FRACTION FORM).

NOTES

ALL PRESTRESSING STRANDS SHALL BE 7-WIRE LOW-RELAXATION GRADE 270 STRANDS AND SHALL CONFORM TO AASHTO M203 EXCEPT FOR SAMPLING REQUIREMENTS WHICH SHALL BE IN ACCORDANCE WITH THE STANDARD SPECIFICATIONS.

ALL REINFORCING STEEL SHALL BE GRADE 60.

APPLY EPOXY PROTECTIVE COATING TO END OF GIRDER SURFACES INDICATED IN ELEVATION VIEW.

EMBEDDED PLATE "B-1" SHALL BE GALVANIZED IN ACCORDANCE WITH THE STANDARD SPECIFICATIONS.

ANCHOR STUDS SHALL CONFORM TO AASHTO M169 GRADES 1010 THROUGH 1020 OR APPROVED EQUAL, AND SHALL MEET THE TYPE "B" REQUIREMENTS OF SUBSECTION 7.3 OF THE ANSI/AASHTO/AWS D1.5 BRIDGE WELDING CODE.

AT ENDS OF GIRDERS TO BE EMBEDDED IN CONCRETE DIAPHRAGMS OR END WALLS, PRESTRESSING STRANDS MAY EXTEND A MAXIMUM OF 2" BEYOND THE GIRDER ENDS. OTHERWISE, PRESTRESSING STRANDS SHALL BE CUT FLUSH WITH THE GIRDER ENDS.

THE TRANSFER OF LOAD FROM THE ANCHORAGES TO THE GIRDER SHALL BE DONE WHEN CONCRETE HAS REACHED A COMPRESSIVE STRENGTH OF NOT LESS THAN 7000 PSI.

DEPENDING ON THE TYPE OF SYSTEM USED TO SUPPORT THE DECK SLAB FORMS, PRESET ANCHORS MAY BE NECESSARY IN THE PRESTRESSED CONCRETE GIRDER.

THE TOP SURFACE OF THE GIRDER, EXCLUDING THE OUTSIDE 4", AND IN THE LINK SLAB REGION, SHALL BE RAKED TO A DEPTH OF 1/4".

WHEN DRAPED STRANDS ARE DETAILED, THE LONGITUDINAL LOCATION OF THE HOLD DOWN DEVICES SHALL BE LOCATED 5'-0" ON EITHER SIDE OF THE GIRDER MIDPOINT, AS SHOWN ON THE GIRDER ELEVATION.

THE CONTRACTOR HAS THE OPTION TO PROVIDE, AT NO ADDITIONAL COST TO THE DEPARTMENT, 2 ADDITIONAL STRANDS AT THE TOP OF THE GIRDER TO FACILITATE TYING OF THE REINFORCING STEEL. THESE STRANDS SHALL BE PULLED TO A LOAD OF 4500 lbs.

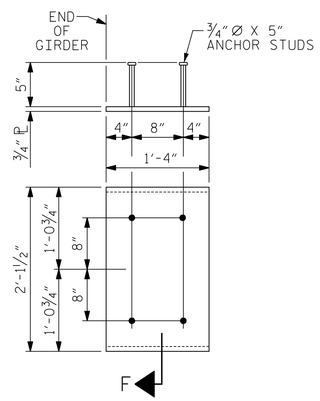

EMBEDDED PLATE "B-1" DETAILS FOR AASHTO TYPE IV GIRDER

(2 REQ'D PER GIRDER)

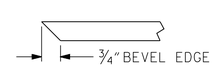

SECTION "F"

(SEE NOTES)

☆ DETAIL "A' REMOVED

NORTH CAROLINA PROFESSIONAL SEAL 030382 ENGINEER ENOCHLEN F. WILSON
DocuSigned by: Enoch Wilson
10/20/2025

SEAL AND SIGNATURE APPLY ONLY TO THOSE ELEMENTS IDENTIFIED WITH A STAR (☆) SYMBOL. NO RESPONSIBILITY IS ASSUMED FOR OTHER ITEMS SHOWN.

NORTH CAROLINA PROFESSIONAL SEAL 020123 ENGINEER STEPHEN T. CHAMPION
DocuSigned by: Stephen T. Champion
05/07/2024

DOCUMENT NOT CONSIDERED FINAL UNLESS ALL SIGNATURES COMPLETED

Johnson, Mirmiran, & Thompson Inc.
4700 Falls of Neuse Rd, Suite 100,
Raleigh, NC, 27609
License No: C-3097

PROJECT NO. I-5898
ROCKINGHAM COUNTY
STATION: 119+69.55 -Y-

SHEET 2 OF 3

STATE OF NORTH CAROLINA
DEPARTMENT OF TRANSPORTATION
RALEIGH

SUPERSTRUCTURE

GIRDER DETAILS & DEAD LOAD DEFLECTIONS

REVISIONS						SHEET NO.
NO.	BY:	DATE:	NO.	BY:	DATE:	S-14
1			3			TOTAL SHEETS
2			4			39

DWN. BY: WDC	DATE: 02/24
CHKD. BY: GFW	DATE: 02/24
DES. EGR. OF RECORD: STC	DATE: 02/24

wsfcruicher
DGN: pw:\\mt-pw.bentley.com:mt-pw-01\Documents\Projects\2016\6-0988-005\Design\Structures\PLANS\DGN\027_I-5898_SMU_D02_S14.dgn
TIME: 08:17 AM on Sunday, May 05, 2024

DocuSign Envelope ID: CFF976E0-6897-4697-83E4-E7CC4C08C579

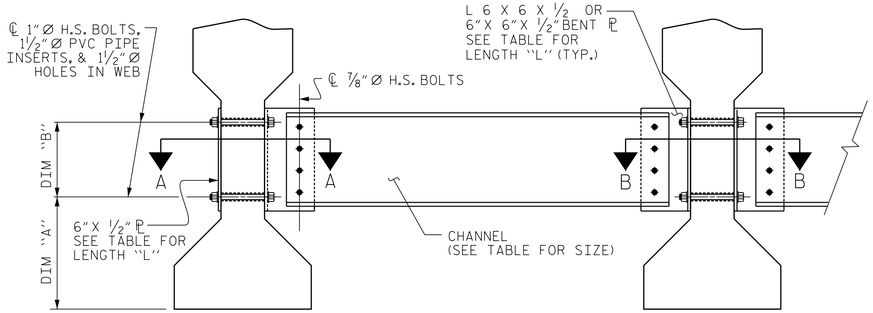

PART SECTION AT INTERMEDIATE DIAPHRAGM

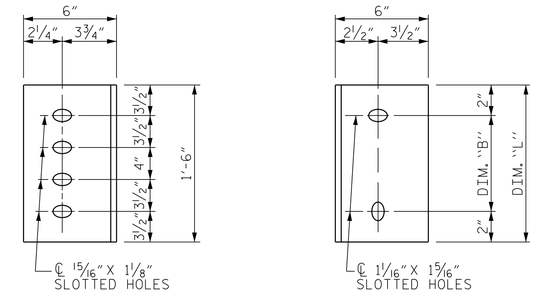

CONNECTOR PLATE DETAILS

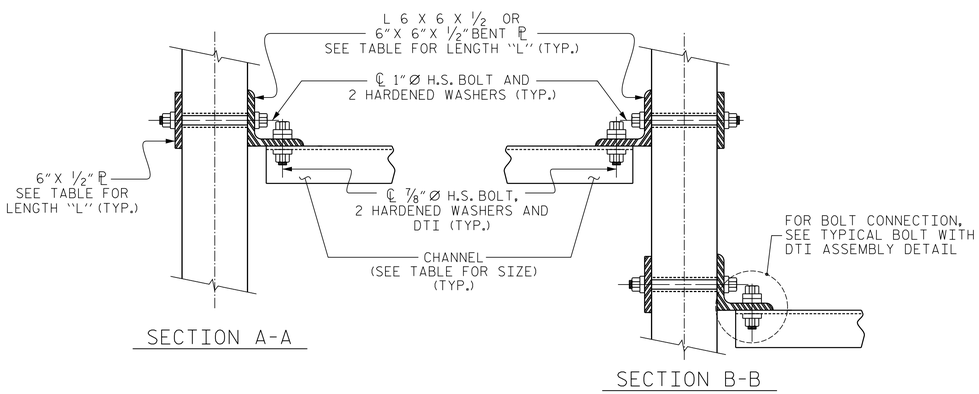

CONNECTION DETAILS

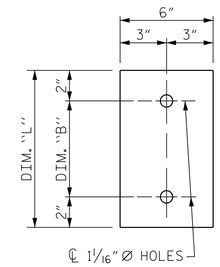

PLATE DETAILS

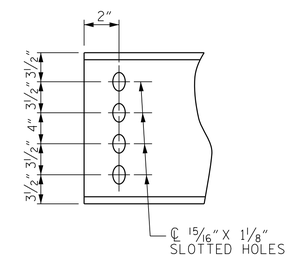

CHANNEL END

STRUCTURAL STEEL NOTES

ALL INTERMEDIATE DIAPHRAGM STEEL AND CONNECTOR PLATES SHALL BE AASHTO M270 GRADE 50 OR APPROVED EQUAL.

TENSION ON THE ASTM A325 BOLTS THROUGH THE CHANNEL MEMBER SHALL BE CALIBRATED USING DIRECT TENSION INDICATOR WASHERS IN ACCORDANCE WITH THE STANDARD SPECIFICATIONS.

TENSION ON THE ASTM A449 BOLTS THROUGH THE GIRDER WEB SHALL BE SNUG TIGHTENED FOLLOWED BY AN ADDITIONAL ¼ TURN.

THE PLATES, BENT PLATES, CHANNELS, AND ANGLES SHALL BE GALVANIZED OR METALLIZED IN ACCORDANCE WITH THE STANDARD SPECIFICATIONS. FOR THERMAL SPRAYED COATINGS (METALLIZATION), SEE SPECIAL PROVISIONS.

FOR METALLIZATION, APPLY A THERMAL SPRAYED COATING WITH A SEAL COAT TO ALL STEEL DIAPHRAGM SURFACES IN ACCORDANCE WITH THE DEPARTMENTS THERMAL SPRAYED COATINGS (METALLIZATION) PROGRAM, THERMAL SPRAYED COATINGS SPECIAL PROVISION AND SECTION 442 OF THE STANDARD SPECIFICATIONS.

GALVANIZE THE HIGH STRENGTH BOLTS, NUTS, WASHERS AND DIRECT TENSION INDICATORS IN ACCORDANCE WITH THE STANDARD SPECIFICATIONS.

USE AN ASTM F436 HARDENED WASHER WITH STANDARD AND SLOTTED HOLES UNDER EACH BOLT HEAD AND NUT.

FOR BOLTS THROUGH THE GIRDER WEB, PROVIDE SUFFICIENT LENGTH OF THREADS ON ALL BOLTS TO ACCOMMODATE WASHERS AND THE THICKNESS OF CONNECTING MEMBER PLUS AT LEAST ¼" PROJECTION BEYOND THE NUT.

INTERMEDIATE DIAPHRAGM ASSEMBLY SHALL COMPLY WITH SECTION 1072 OF THE STANDARD SPECIFICATIONS.

SUBMIT TWO SETS OF WORKING DRAWINGS FOR THE INTERMEDIATE DIAPHRAGM ASSEMBLY FOR REVIEW, COMMENTS AND ACCEPTANCE. AFTER REVIEW, COMMENTS, AND ACCEPTANCE, SUBMIT SEVEN SETS FOR DISTRIBUTION.

IN THE EXTERIOR BAYS, PLACE TEMPORARY STRUTS BETWEEN PRESTRESSED GIRDERS ADJACENT TO THE STEEL DIAPHRAGMS. STRUTS SHALL REMAIN IN PLACE 3 DAYS AFTER CONCRETE IS PLACED.

THE COST OF THE STEEL DIAPHRAGMS AND ASSEMBLIES SHALL BE INCLUDED IN THE UNIT PRICE BID FOR PRESTRESSED CONCRETE GIRDERS.

TABLE

GIRDER TYPE	CHANNEL SIZE	DIM "A"	DIM "B"	DIM "L"
IV	MC 18 x 42.7	1'-9½"	1'-2"	1'-6"

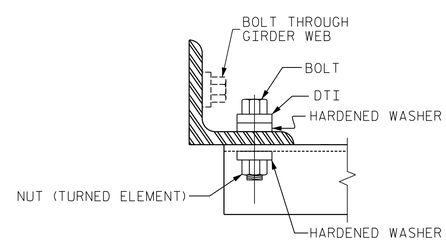

BOLT WITH DTI ASSEMBLY DETAIL

PROJECT NO. I-5898

ROCKINGHAM COUNTY

STATION: 119+69.55 -Y-

SHEET 3 OF 3

DocuSigned by: Stephen T. Champion

NORTH CAROLINA PROFESSIONAL SEAL 020123 ENGINEER STEPHEN T. CHAMPION

5/10/2024

STATE OF NORTH CAROLINA
DEPARTMENT OF TRANSPORTATION
RALEIGH

STANDARD

INTERMEDIATE STEEL DIAPHRAGMS FOR TYPE IV PRESTRESSED CONCRETE GIRDERS

DOCUMENT NOT CONSIDERED FINAL UNLESS ALL SIGNATURES COMPLETED

Johnson, Mirmiran, & Thompson Inc.
4700 Falls of Neuse Rd, Suite 100,
Raleigh, NC, 27609
License No: C-3097

REVISIONS							SHEET NO.
NO.	BY:	DATE:	NO.	BY:	DATE:		S-15
1			3				TOTAL SHEETS
2			4				39

DWN. BY: WDC	DATE: 02/24	DRAWN BY : TLA 6/05
CHKD. BY: GFW	DATE: 02/24	CHECKED BY : VC 6/05
DES. EGR. OF RECORD: STC	DATE: 02/24	

wdcrutcher
DGN: pw:\\jmt-pw.bentley.com:jmt-pw-01\Documents\Projects\2016\16-0988-005\Design\Structures\PLANS\GDN\029_I-5898_SMU_G103_S15.dgn
TIME: 08:17 AM on Sunday, May 05, 2024

DocuSign Envelope ID: CFF976E0-6897-4697-83E4-E7CC4C08C579

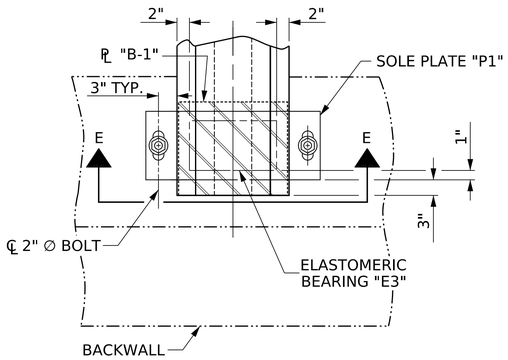

TYPICAL PLAN

(SHOWING END BENT)

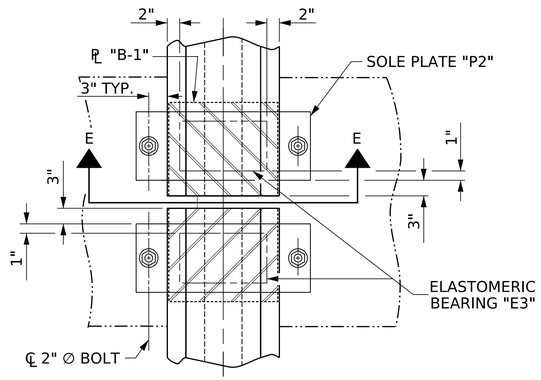

TYPICAL PLAN

(SHOWING BENT)

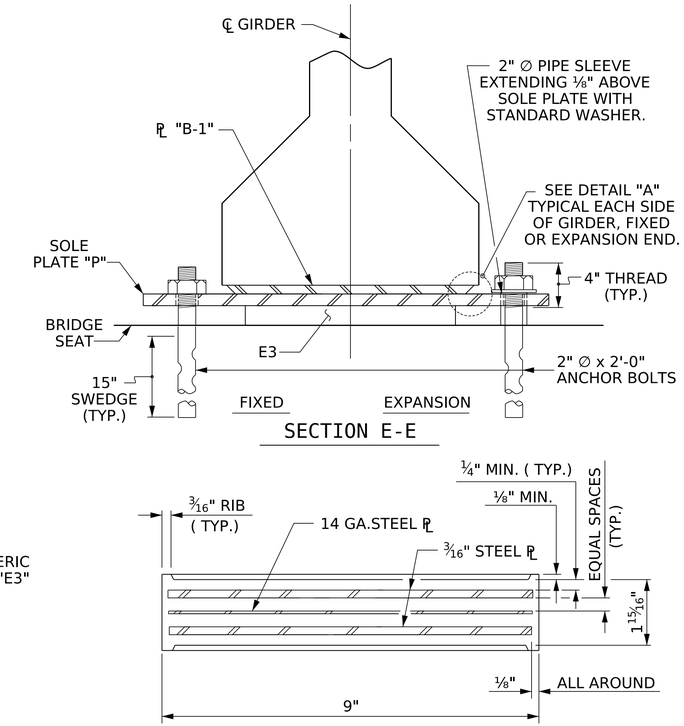

TYPICAL SECTION OF ELASTOMERIC BEARINGS

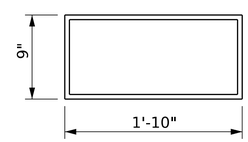

E3 (32 REQ'D)

PLAN VIEW OF ELASTOMERIC BEARING

TYPE IV

MAXIMUM ALLOWABLE SERVICE LOADS	
D.L.+L.L. (NO IMPACT)	
TYPE IV	225 k

NOTES

AT ALL FIXED POINTS OF SUPPORT, NUTS FOR ANCHOR BOLTS ARE TO BE TIGHTENED FINGER TIGHT AND THEN BACKED OFF ½ TURN. THE THREAD OF THE NUT AND BOLT SHALL THEN BE BURRED WITH A SHARP POINTED TOOL.

THE 2" ∅ PIPE SLEEVE SHALL BE CUT FROM SCHEDULE 40 PVC PLASTIC PIPE. THE PVC PLASTIC PIPE SHALL MEET THE REQUIREMENTS OF ASTM D1785.

STEEL SOLE PLATES, ANCHOR BOLTS, NUTS, AND WASHERS SHALL BE GALVANIZED IN ACCORDANCE WITH THE STANDARD SPECIFICATIONS.

PRIOR TO WELDING, GRIND THE GALVANIZED SURFACE OF THE PORTION OF THE EMBEDDED PLATE AND SOLE PLATE THAT ARE TO BE WELDED. AFTER WELDING, DAMAGED GALVANIZED SURFACES SHALL BE REPAIRED IN ACCORDANCE WITH THE STANDARD SPECIFICATIONS.

WHEN WELDING THE SOLE PLATE TO THE EMBEDDED PLATE IN THE GIRDER, USE TEMPERATURE INDICATING WAX PENS, OR OTHER SUITABLE MEANS, TO ENSURE THAT THE TEMPERATURE OF THE SOLE PLATE DOES NOT EXCEED 300°F. TEMPERATURES ABOVE THIS MAY DAMAGE THE ELASTOMER.

SOLE PLATE "P", BOLTS, NUTS, WASHERS, AND PIPE SLEEVE SHALL BE INCLUDED IN THE PAY ITEM FOR PRESTRESSED CONCRETE GIRDERS.

ANCHOR BOLTS SHALL MEET THE REQUIREMENTS OF ASTM A449. NUTS SHALL MEET THE REQUIREMENTS OF AASHTO M291-DH OR AASHTO M292-2H. WASHERS SHALL MEET THE REQUIREMENTS OF AASHTO M293. SHOP DRAWINGS ARE NOT REQUIRED FOR ANCHOR BOLT, NUTS AND WASHERS. SHOP INSPECTION IS REQUIRED.

ALL SURFACES OF BEARING PLATES SHALL BE SMOOTH AND STRAIGHT.

THE ELASTOMER IN THE STEEL REINFORCED BEARINGS SHALL HAVE A SHEAR MODULUS OF 0.160 KSI, IN ACCORDANCE WITH AASHTO M251.

FOR STEEL REINFORCED ELASTOMERIC BEARINGS, SEE STANDARD SPECIFICATIONS.

ALL SOLE PLATES SHALL BE AASHTO M270 GRADE 36.

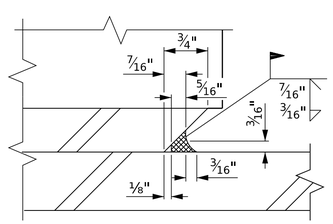

DETAIL "A"

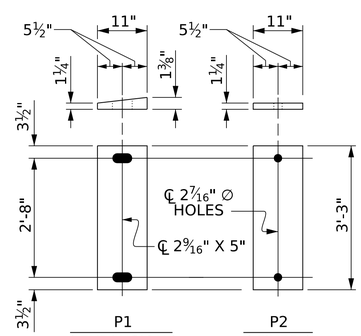

P1 (EXPANSION) P1 (16 REQ'D)

P2 (FIXED) P2 (16 REQ'D)

SOLE PLATE DETAILS ("P")

PROJECT NO. I-5898

ROCKINGHAM COUNTY

STATION: 119+69.55 -Y-

DocuSigned by: Stephen T. Champion

NORTH CAROLINA PROFESSIONAL SEAL 020123 ENGINEER STEPHEN T. CHAMPION 05/07/2024

DOCUMENT NOT CONSIDERED FINAL UNLESS ALL SIGNATURES COMPLETED

Johnson, Mirmiran, & Thompson Inc.
4700 Falls of Neuse Rd, Suite 100,
Raleigh, NC, 27609
License No: C-3097

STATE OF NORTH CAROLINA
DEPARTMENT OF TRANSPORTATION
RALEIGH

STANDARD

ELASTOMERIC BEARING DETAILS

PRESTRESSED CONCRETE GIRDER SUPERSTRUCTURE

REVISIONS								SHEET NO.
NO.	BY:	DATE:	NO.	BY:	DATE:			S-16
1			3					TOTAL SHEETS
2			4					39

STD. NO. EB3

DWN. BY: WDC	DATE: 02/24	DRAWN BY : WJH	8/89	REV. 1/15	MAA/TMG
CHKD. BY: GFW	DATE: 02/24	CHECKED BY : CRK	8/89	REV. 12/17	MAA/THC
DES. EGR. OF RECORD: STC	DATE: 02/24			REV. 10/21	BNB/AAI

wdcrutcher
DGN: pw:\\jmt-pw.bentley.com:jmt-pw-01\Documents\Projects\2016\6-0988-005\Design\Structures\PLANS\GENN031-I-5898_SMU_B001_S16.dgn
TIME: Ocurr All on Sunday, May 05, 2024

DocuSign Envelope ID: CFF976E0-6897-4697-83E4-E7CC4C08C579

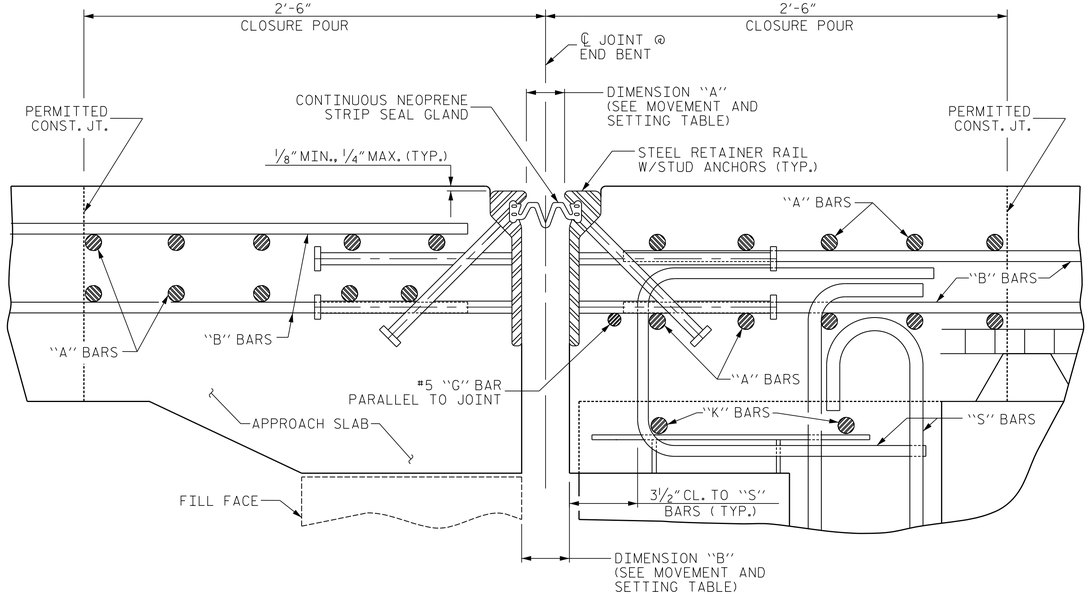

STRIP SEAL EXPANSION JOINT DETAILS

SECTION NORMAL TO JOINT -- PRESTRESSED GIRDER SUPERSTRUCTURE

MOVEMENT AND SETTING AT JOINT								
LOCATION	SKEW ANGLE	TOTAL MOVEMENT (ALONG ℄ RDWY)	DIMENSION "A"			DIMENSION "B"		
			PERPENDICULAR JOINT OPENING AT 45° F	PERPENDICULAR JOINT OPENING AT 60° F	PERPENDICULAR JOINT OPENING AT 90° F	PERPENDICULAR JOINT OPENING AT 45° F	PERPENDICULAR JOINT OPENING AT 60° F	PERPENDICULAR JOINT OPENING AT 90° F
END BENT 1	114°-48'-52.2"	9/16"	2 1/16"	2"	1 13/16"	2 9/16"	2 1/2"	2 5/16"
END BENT 2	114°-48'-52.2"	9/16"	2 1/16"	2"	1 13/16"	2 9/16"	2 1/2"	2 5/16"

JOINT INSTALLATION PROCEDURE:

1. INSTALL THE STRIP SEAL EXPANSION JOINT AS RECOMMENDED BY THE MANUFACTURER.
2. A MANUFACTURER'S REPRESENTATIVE SHALL BE PRESENT DURING INSTALLATION OF THE JOINT.
3. PLACE STEEL RETAINER RAILS IN JOINT OPENING. PROPERLY ALIGN THE RAILS BOTH HORIZONTALLY AND VERTICALLY. DO NOT WELD SUPPORT SYSTEM TO THE METALLIZED SURFACES OF THE STEEL RETAINER RAILS.
4. CONFLICTING REINFORCING STEEL MAY BE SHIFTED SLIGHTLY WHEN NECESSARY.
5. DECK SLAB CONCRETE PLACEMENT OPERATIONS SHALL COMMENCE PER THE POURING SEQUENCE AFTER FINAL JOINT ALIGNMENT IS SET.
6. PROTECT THE STEEL RETAINER RAILS FROM BEING FOULED BY CONCRETE SPILLOVER DURING THE DECK POUR.
7. LOOSEN THE STEEL RETAINER RAIL SUPPORT SYSTEM TO ALLOW MOVEMENT WHILE CONCRETE CURES.
8. RE-LEVEL AND RE-ALIGN STEEL RETAINER RAIL AS REQUIRED ON OPPOSITE SIDE OF JOINT.
9. PLACE APPROACH SLAB CONCRETE.
10. ONCE THE CONCRETE HAS HARDENED SUFFICIENTLY ON BOTH SIDES OF JOINT, STEEL RETAINER RAILS SHALL BE CLEANED THOROUGHLY AND SEAL CHANNELS SHALL BE INSPECTED TO ASCERTAIN THE ABSENCE OF CONCRETE AND DEBRIS.
11. COAT THE STRIP SEAL LUGS WITH LUBRICANT-ADHESIVE AND INSTALL THE NEOPRENE STRIP SEAL GLAND AS RECOMMENDED BY THE STRIP SEAL EXPANSION JOINT MANUFACTURER.

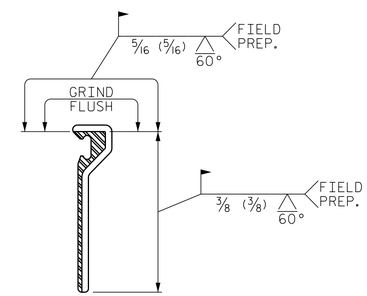

STEEL RETAINER RAIL (FIELD SPLICE DETAIL)

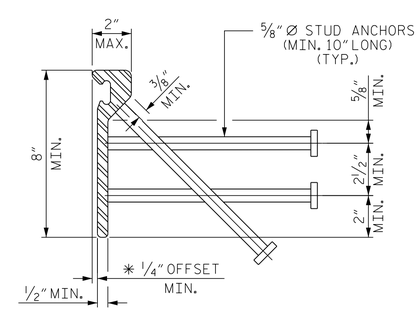

TYPICAL SECTION STEEL RETAINER RAIL

* DIMENSION "B" BASED ON STEEL RETAINER RAIL TOP OFFSET TO FACE OF RAIL OF 1/4" MINIMUM. IF ACTUAL OFFSET IS GREATER ADJUST DIMENSION "B" AS REQUIRED.

GENERAL NOTES

FOR STRIP SEAL EXPANSION JOINTS, SEE SPECIAL PROVISIONS.

STEEL RETAINER RAILS AND COVER PLATES SHALL CONFORM TO AASHTO M270 GRADE 36 OR GRADE 50 STEEL. ALL STUD ANCHORS SHALL CONFORM TO AASHTO M169, GRADES 1010 THRU 1020 OR APPROVED EQUAL. ALL CONCRETE INSERTS SHALL BE CLOSED END AND SHALL CONFORM TO AASHTO M169, GRADE 12L14. TENSILE CAPACITY SHALL BE 3000 LBS. MIN.

ONLY STEEL RETAINER RAILS OF ONE-PIECE CONSTRUCTION ARE PERMITTED. STEEL RETAINER RAILS CONSISTING OF TWO OR MORE COMPONENTS WELDED TOGETHER TO OBTAIN THEIR FINAL CROSS-SECTIONAL SHAPE ARE NOT PERMITTED.

STUD ANCHORS SHALL BE SHOP WELDED AND SHALL BE ELECTRIC ARC END WELDED WITH COMPLETE FUSION.

SURFACES COMING IN CONTACT WITH STRIP SEAL GLAND SHALL BE GROUND SMOOTH PRIOR TO METALLIZING.

UPON COMPLETION OF SHOP FABRICATION, THE STEEL RETAINER RAILS SHALL BE METALLIZED AS SHOWN IN THE "METALLIZING DETAIL". SEE SPECIAL PROVISIONS FOR THERMAL SPRAYED COATINGS (METALLIZATION).

INSTALLED STEEL RETAINER RAILS SHALL FOLLOW THE ROADWAY SLOPE.

FIELD SPLICES OF THE RETAINER RAILS SHALL BE KEPT TO A MINIMUM. CONTRACTOR SHALL FURNISH DETAILED PLANS SHOWING PROPOSED SPLICE LOCATIONS FOR APPROVAL. FINISHED WELDS SHALL BE REPAIRED IN ACCORDANCE WITH THE SPECIAL PROVISION FOR THERMAL SPRAYED COATINGS (METALLIZATION).

NEOPRENE STRIP SEAL GLAND SHALL BE CONTINUOUS THROUGHOUT THE JOINT AND SHALL BE COMPATIBLE WITH THE STEEL RETAINER RAILS. FIELD SPLICING THE GLAND IS NOT PERMITTED.

NO ALTERNATE JOINT DETAILS SHALL BE PERMITTED IN LIEU OF THOSE SHOWN ON THESE PLANS.

THE COVER PLATES SHALL BE GALVANIZED OR METALLIZED IN ACCORDANCE WITH THE STANDARD SPECIFICATIONS. FOR THERMAL SPRAYED COATINGS (METALLIZATION), SEE SPECIAL PROVISIONS.

THE CONTRACTOR MAY, AT HIS OPTION, USE ADHESIVELY ANCHORED ANCHOR BOLTS IN PLACE OF CONCRETE INSERTS FOR COVER PLATES. THE YIELD LOAD OF THE 3/4" Ø BOLT IS 10 KIPS. FIELD TESTING OF THE ADHESIVE BONDING SYSTEM IS NOT REQUIRED.

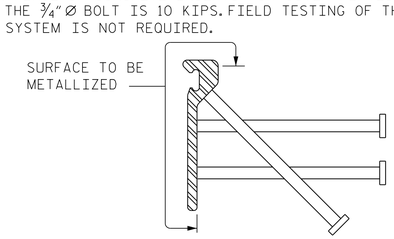

METALLIZING DETAIL

PROJECT NO. I-5898

ROCKINGHAM COUNTY

STATION: 119+69.55 -Y-

SHEET 1 OF 3

DocuSigned by: Stephen T. Champion
NORTH CAROLINA PROFESSIONAL SEAL 020123 ENGINEER STEPHEN T. CHAMPION
5/30/2024

STATE OF NORTH CAROLINA
DEPARTMENT OF TRANSPORTATION
RALEIGH

STANDARD

STRIP SEAL EXPANSION JOINT DETAILS

DOCUMENT NOT CONSIDERED FINAL UNLESS ALL SIGNATURES COMPLETED

Johnson, Mirmiran, & Thompson Inc.
4700 Falls of Neuse Rd, Suite 100,
Raleigh, NC, 27609
License No: C-3097

REVISIONS								SHEET NO.
NO.	BY:	DATE:	NO.	BY:	DATE:			S-17
1			3					TOTAL SHEETS
2			4					39

STD. NO. SSEJ1

DWN. BY: WDC	DATE: 02/24	DRAWN BY : MAA	6/20
CHKD. BY: GFW	DATE: 02/24	CHECKED BY : BNB	6/20
DES. EGR. OF RECORD: STC	DATE: 02/24		

wdcrutcher
DGN: pw:\\jmt-pw.bentley.com:jmt-pw-01\Documents\Projects\2016\16-0988-005\Design\Structures\PLANS\GENN033_I-5898_SMU_SSOI_STP.dgn
TIME: 08:11 AM on Sunday, May 05, 2024

DocuSign Envelope ID: CFF976E0-6897-4697-83E4-E7CC4C08C579

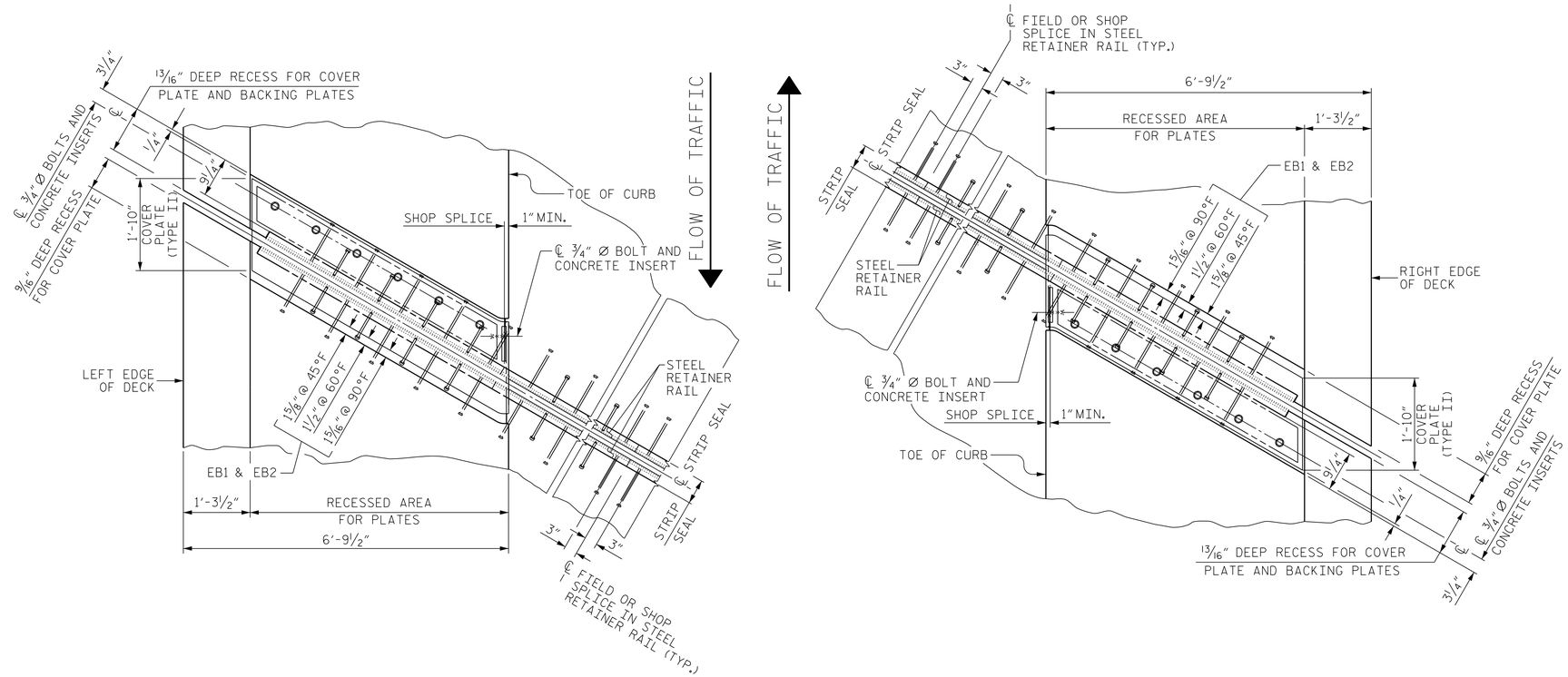

PLAN OF STRIP SEAL EXPANSION JOINT

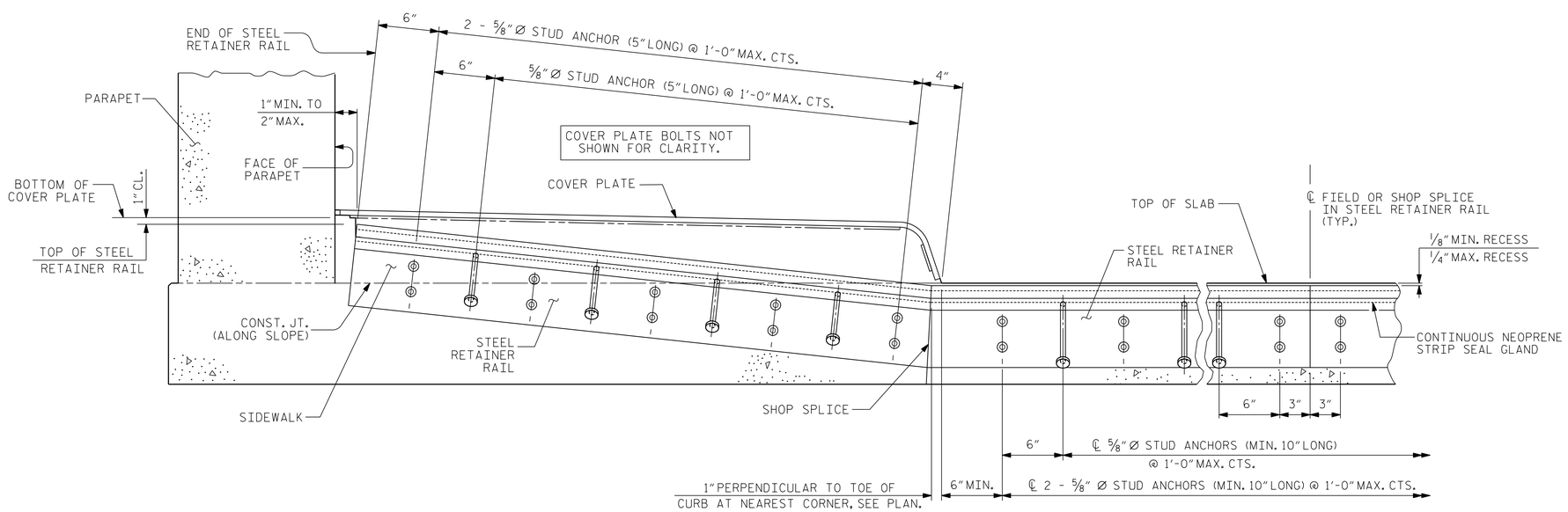

SECTION THRU SIDEWALK NORMAL TO JOINT

PROJECT NO. I-5898
ROCKINGHAM COUNTY
STATION: 119+69.55 -Y-

SHEET 2 OF 3

STATE OF NORTH CAROLINA
DEPARTMENT OF TRANSPORTATION
RALEIGH

STANDARD
STRIP SEAL EXPANSION JOINT DETAILS FOR SIDEWALK

NORTH CAROLINA PROFESSIONAL SEAL 020123 ENGINEER STEPHEN T. CHAMPION 05/03/2024

DOCUMENT NOT CONSIDERED FINAL UNLESS ALL SIGNATURES COMPLETED

Johnson, Mirmiran, & Thompson Inc.
4700 Falls of Neuse Rd, Suite 100,
Raleigh, NC, 27609
License No: C-3097

REVISIONS						SHEET NO.
NO.	BY:	DATE:	NO.	BY:	DATE:	S-18
1			3			TOTAL SHEETS
2			4			39

STD. NO. SSEJ3

DWN. BY: WDC	DATE: 02/24	DRAWN BY : MAA	6/20
CHKD. BY: GFW	DATE: 02/24	CHECKED BY : BNB	6/20
DES. EGR. OF RECORD: STC	DATE: 02/24		

wdcrutcher
DGN: pw:\\jmt-pw.bentley.com:jmt-pw-01\Documents\Projects\2016\6-0988-005\Design\Structures\PLANS\GENN035_I-5898_SMU_SS02_S18.dgn
TIME: Ocur AM on Sunday, May 05, 2024

DocuSign Envelope ID: CFF976E0-6897-4697-83E4-E7CC4C08C579

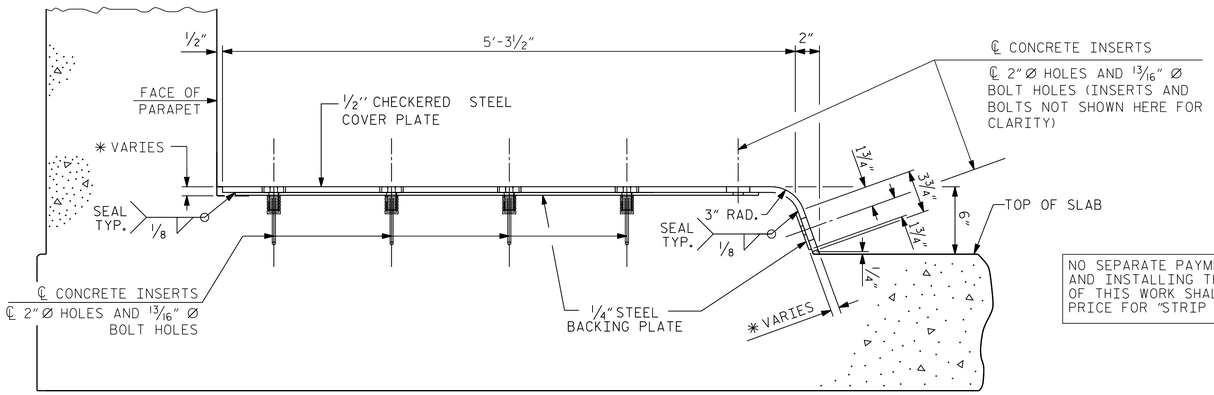

NO SEPARATE PAYMENT WILL BE MADE FOR FURNISHING AND INSTALLING THE COVER PLATE. THE ENTIRE COST OF THIS WORK SHALL BE INCLUDED IN THE LUMP SUM PRICE FOR "STRIP SEAL EXPANSION JOINT".

END VIEW
(NORMAL TO SIDEWALK)

✱ CONCRETE RECESS DIMENSIONS:
13/16" FOR THE SIDE OF THE JOINT HAVING THE 1/2" COVER PLATE WITH A 1/4" BACKING PLATE.
9/16" FOR THE SIDE OF THE JOINT HAVING ONLY THE 1/2" COVER PLATE.

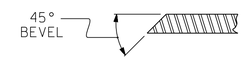

SECTION B-B

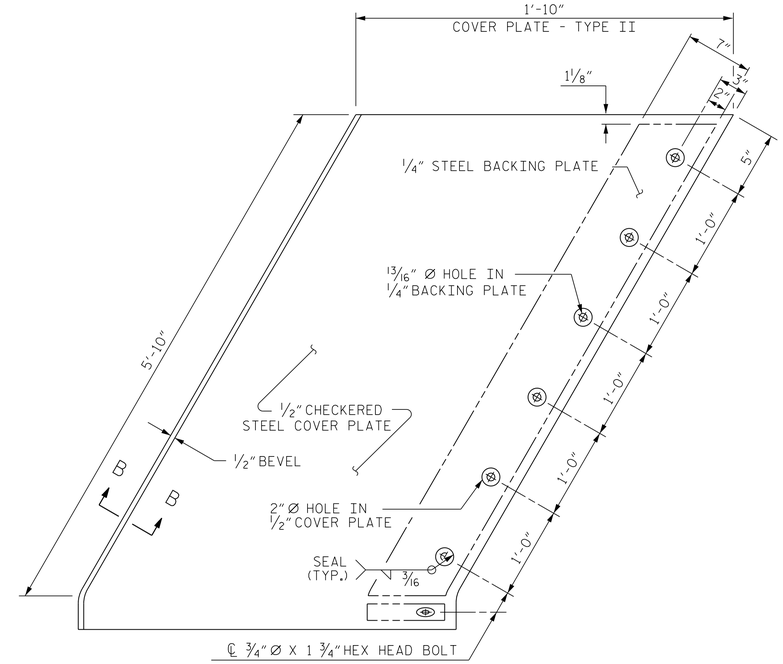

TYPE II - PLAN VIEW

COVER PLATE DETAILS

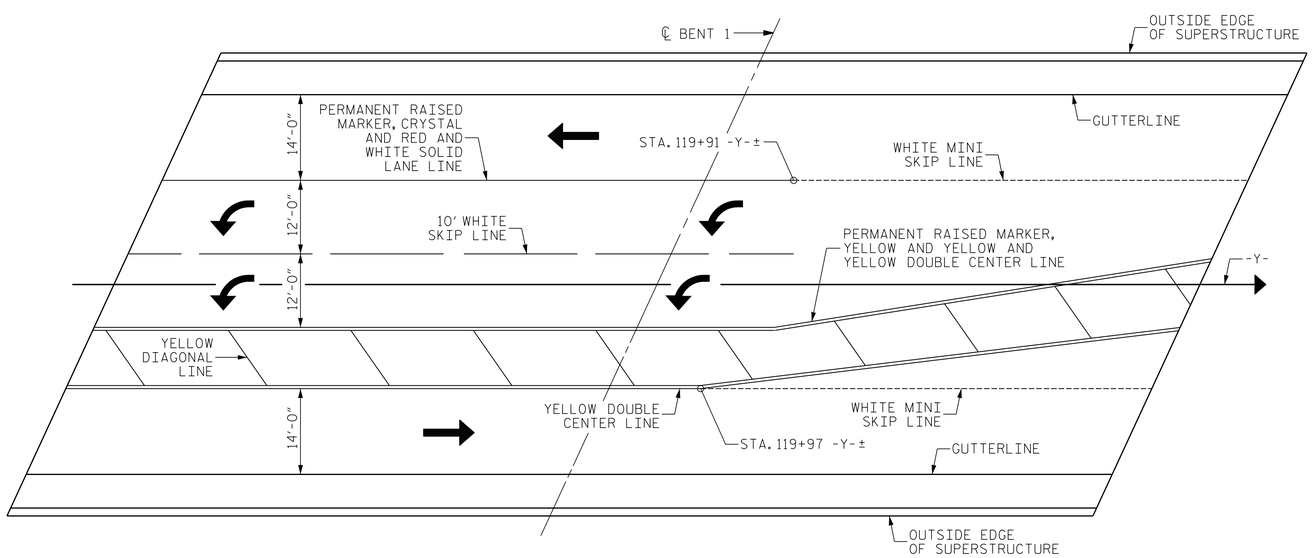

PAVEMENT MARKING ALIGNMENT

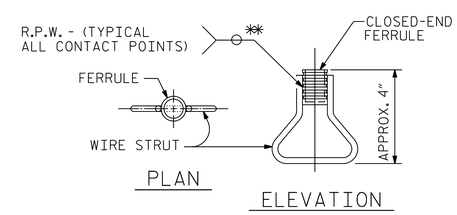

CONCRETE INSERT

✱✱ EACH WELDED ATTACHMENT OF WIRE TO FERRULE SHALL DEVELOP THE TENSILE STRENGTH OF THE WIRE.

PROJECT NO. I-5898
ROCKINGHAM COUNTY
STATION: 119+69.55 -Y-

SHEET 3 OF 3

DocuSigned by: Stephen T. Champion
NORTH CAROLINA PROFESSIONAL SEAL 020123 ENGINEER STEPHEN T. CHAMPION
05/07/2024

STATE OF NORTH CAROLINA
DEPARTMENT OF TRANSPORTATION
RALEIGH

STANDARD
STRIP SEAL EXPANSION JOINT DETAILS FOR SIDEWALK

REVISIONS						SHEET NO.
NO.	BY:	DATE:	NO.	BY:	DATE:	S-19
1			3			TOTAL SHEETS
2			4			39

STD. NO. SSEJ4

DOCUMENT NOT CONSIDERED FINAL UNLESS ALL SIGNATURES COMPLETED

Johnson, Mirmiran, & Thompson Inc.
4700 Falls of Neuse Rd, Suite 100,
Raleigh, NC, 27609
License No: C-3097

DWN. BY: WDC	DATE: 02/24	DRAWN BY : MAA	6/20
CHKD. BY: GFW	DATE: 02/24	CHECKED BY : BNB	6/20
DES. EGR. OF RECORD: STC	DATE: 02/24		

wdcrutcher
DGN: pw:\\jmt-pw.bentley.com:jmt-pw-01\Documents\Projects\2016\6-0988-005\Design\Structures\PLANS\DGN\037_I-5898_SMU_SS03_S19.dgn
TIME: Ø8:11 AM on Sunday, May 05, 2024

DocuSign Envelope ID: CFF976E0-6897-4697-83E4-E7CC4C08C579

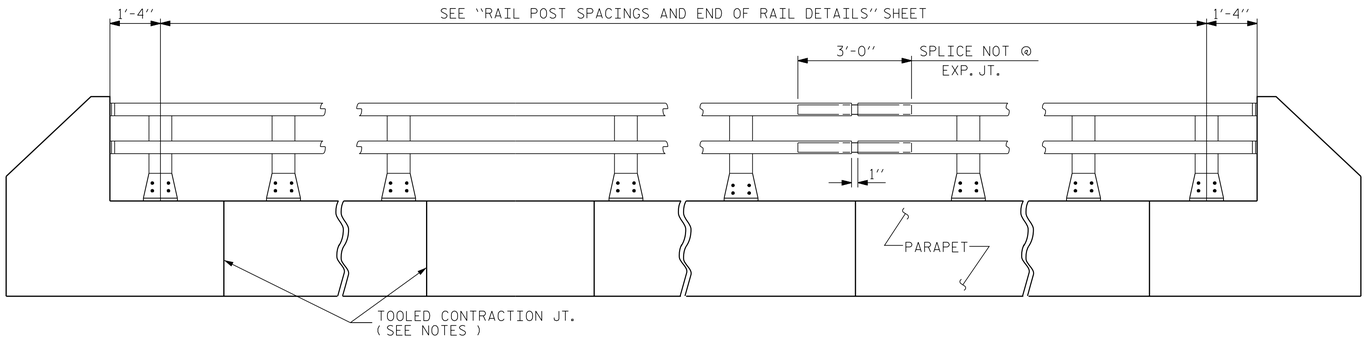

ELEVATION

NOTE : FOR ATTACHMENT OF METAL RAIL TO END POST, SEE SHEET 3 OF 5.

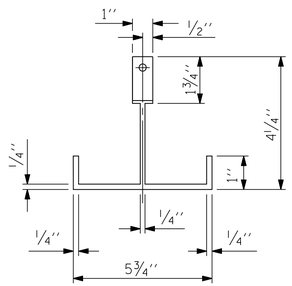

PLAN

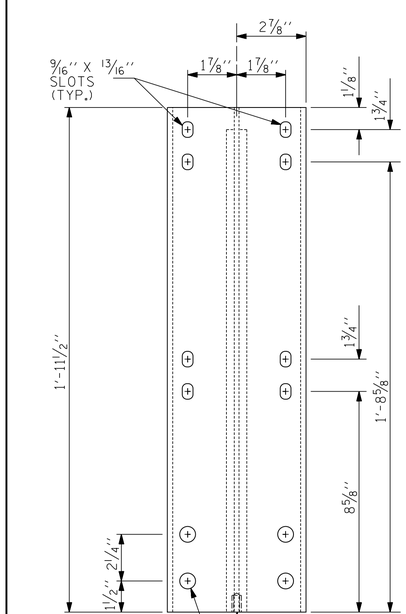

FRONT ELEVATION

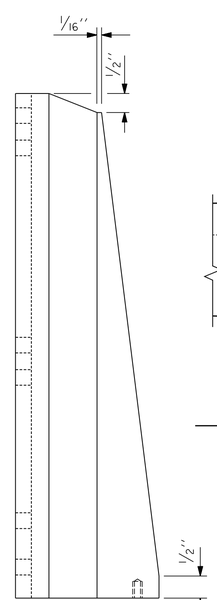

SIDE ELEVATION

DETAILS OF POST

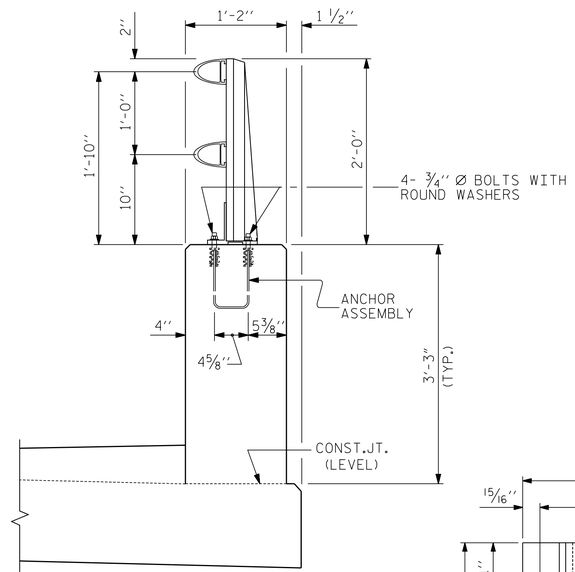

SECTION THRU PARAPET AND RAIL

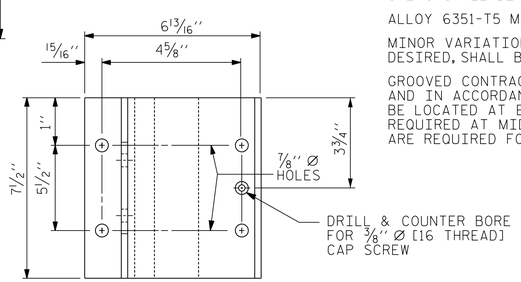

PLAN

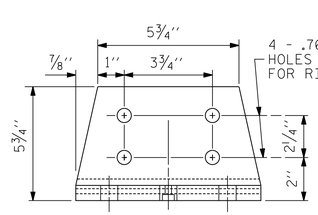

FRONT ELEVATION

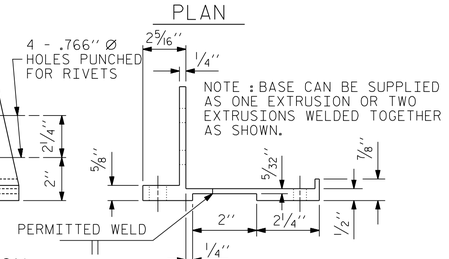

SIDE ELEVATION

POST BASE DETAILS

NOTES

AT THE CONTRACTOR'S OPTION, METAL RAIL MAY BE EITHER ALUMINUM OR GALVANIZED STEEL IN ACCORDANCE WITH THE REQUIREMENTS OF THE GENERAL NOTES AND THE FOLLOWING SPECIFICATIONS FOR THE ALTERNATE MATERIALS; HOWEVER, THE CONTRACTOR WILL BE REQUIRED TO USE THE SAME RAIL MATERIAL ON ALL STRUCTURES ON THE PROJECT FOR WHICH METAL RAIL IS DESIGNATED.

UNLESS OTHERWISE REQUIRED IN THE CONTRACT DOCUMENTS, THE CONTRACTOR HAS THE OPTION TO USE AN ALTERNATE TO THE 2 BAR METAL RAIL. THE ALTERNATE RAIL SHALL MEET THE REQUIREMENTS OF THE AASHTO LRFD BRIDGE DESIGN SPECIFICATIONS AND MUST BE LISTED ON THE DEPARTMENT'S APPROVED PRODUCTS LIST (APL) UNDER "2 BAR METAL RAIL ALTERNATE". ADJUSTMENTS TO THE CONCRETE PARAPET WILL NOT BE ALLOWED.

ALUMINUM RAILS

MATERIAL FOR POSTS, BASES AND RAILS, EXPANSION BARS AND CLAMP BARS SHALL BE ASTM B-221 ALLOY 6061-T6.

MATERIAL FOR RIVETS SHALL BE ASTM B316 ALLOY 6061-T6. RIVETS SHALL BE STANDARD BUTTON HEAD AND CONE POINT COLD DRIVEN AS PER DRAWING.

THE BASE OF RAIL POSTS, OR ANY OTHER ALUMINUM SURFACE IN CONTACT WITH CONCRETE SHALL BE THOROUGHLY COATED WITH AN ALUMINUM IMPREGNATED CAULKING COMPOUND OF APPROVED QUALITY.

MATERIAL FOR SHIMS TO BE ASTM B209 ALLOY 6061-T6.

GALVANIZED STEEL RAILS

MATERIAL AND GALVANIZING ARE TO CONFORM TO THE FOLLOWING SPECIFICATIONS:

POST, POST BASES, RAILS, EXPANSION BARS AND CLAMP BARS: AASHTO M270 GRADE 36 STRUCTURAL STEEL - GALVANIZED TO AASHTO M111.

RIVETS: RIVETS SHALL MEET THE REQUIREMENTS OF ASTM A502 FOR GRADE 1 RIVETS.

THE CUT ENDS OF GALVANIZED STEEL RAILING, AFTER GRINDING SMOOTH SHALL BE GIVEN TWO COATS OF ZINC RICH PAINT MEETING THE REQUIREMENTS OF FEDERAL SPECIFICATION MIL-P-26915 USAF TYPE 1, OR OF FEDERAL SPECIFICATIONS TT-P-641.

SHIMS: SHIMS SHALL MEET THE REQUIREMENTS OF ASTM A570 FOR GRADE 33 OR A611 FOR GRADE C AND SHALL BE GALVANIZED IN ACCORDANCE WITH AASHTO M111.

RAIL CAPS: RAIL CAPS SHALL MEET THE REQUIREMENTS OF ASTM A570 FOR GRADE 33 OR A611 FOR GRADE C AND SHALL BE GALVANIZED IN ACCORDANCE WITH AASHTO M111.

GENERAL NOTES

RAILING SHALL BE CONTINUOUS FROM END POST TO END POST OF BRIDGE. EACH JOINT IN RAIL LENGTH SHALL BE SPLICED AS DETAILED. PANEL LENGTHS OF RAIL SHALL BE ATTACHED TO A MINIMUM OF THREE POSTS.

FOR END OF RAIL TO CLEAR FACE OF CONCRETE END POST DIMENSION, SEE STANDARD NO. BMR2.

CAP SCREWS SHALL BE ASTM F593 ALLOY 305 STAINLESS STEEL. WASHERS SHALL MEET THE REQUIREMENTS OF ASTM F844 EXCEPT THEY SHALL BE MADE FROM ALLOY 304 STAINLESS STEEL.

CERTIFIED MILL REPORTS ARE REQUIRED FOR RAILS AND POSTS. SHOP INSPECTION IS NOT REQUIRED.

METAL RAIL POSTS SHALL BE SET NORMAL TO CURB GRADE.

METHOD OF MEASUREMENT FOR METAL RAILS: FOR LENGTH OF METAL RAILS TO BE PAID FOR, SEE THE STANDARD SPECIFICATIONS.

CURVED RAIL USAGE: WHERE RAILS ARE TO BE USED ON BRIDGES ON HORIZONTAL AND/OR VERTICAL CURVATURE THE CONTRACTOR MAY, AT HIS OPTION, HAVE THE REQUIRED CURVATURE IN THE RAIL FORMED IN THE SHOP OR IN THE FIELD. IN EITHER EVENT, THE RAIL SHALL CONFORM WITHOUT BUCKLING OR KINKING TO THE REQUIRED CURVATURE IN A UNIFORM MANNER ACCEPTABLE TO THE ENGINEER.

TO INSURE FUTURE IDENTIFICATION OF THE FABRICATOR, A PERMANENT IDENTIFYING MARK SHALL BE PLACED ON EACH POST. THE METHOD OF MARKING AND LOCATION SHALL BE SUCH THAT IT DOES NOT DETRACT FROM THE APPEARANCE OF THE POST, BUT REMAINS VISIBLE AFTER RAIL PLACEMENT.

SHIMS SHALL BE USED AS NECESSARY FOR POST ALIGNMENT.

ALLOY 6351-T5 MAY BE SUBSTITUTED FOR ALLOY 6061-T6 WHERE APPLICABLE.

MINOR VARIATIONS IN DETAILS OF METAL RAIL WILL BE CONSIDERED. DETAILS OF SUCH VARIATIONS, IF DESIRED, SHALL BE SUBMITTED FOR APPROVAL.

GROOVED CONTRACTION JOINTS, 1/2" IN DEPTH, SHALL BE TOOLED IN ALL EXPOSED FACES OF THE PARAPET AND IN ACCORDANCE WITH ARTICLE 825-10(B) OF THE STANDARD SPECIFICATIONS. A CONTRACTION JOINT SHALL BE LOCATED AT EACH THIRD POINT BETWEEN PARAPET EXPANSION JOINTS. ONLY ONE CONTRACTION JOINT IS REQUIRED AT MIDPOINT OF PARAPET SEGMENTS LESS THAN 20 FEET IN LENGTH AND NO CONTRACTION JOINTS ARE REQUIRED FOR THOSE SEGMENTS LESS THAN 10 FEET IN LENGTH.

PAY LENGTH = 338.48 LIN. FT.

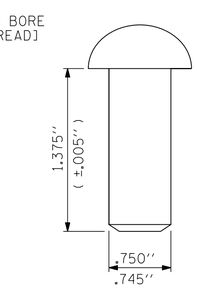

RIVET DETAIL

PROJECT NO. I-5898

ROCKINGHAM COUNTY

STATION: 119+69.55 -Y-

SHEET 1 OF 5

DocuSigned by: Stephen T. Champion
NORTH CAROLINA PROFESSIONAL SEAL 020123 ENGINEER STEPHEN T. CHAMPION
05/07/2024

STATE OF NORTH CAROLINA
DEPARTMENT OF TRANSPORTATION
RALEIGH

STANDARD

2 BAR METAL RAIL

DOCUMENT NOT CONSIDERED FINAL UNLESS ALL SIGNATURES COMPLETED

Johnson, Mirmiran, & Thompson Inc.
4700 Falls of Neuse Rd, Suite 100,
Raleigh, NC, 27609
License No: C-3097

REVISIONS						SHEET NO.
NO.	BY:	DATE:	NO.	BY:	DATE:	S-20
1			3			TOTAL SHEETS
2			4			39

STD. NO. BMR3

DWN. BY: WDC	DATE: 02/24	DRAWN BY : EEM 6/94	REV. 10/1/11	MAA/GM
CHKD. BY: GFW	DATE: 02/24	CHECKED BY : RGW 6/94	REV. 6/13	MAA/GM
DES. EGR. OF RECORD: STC	DATE: 02/24		REV. 12/17	MAA/THC

wdcrafter
DGN: pw:\\jmt-pw.bentley.com:jmt-pw-01\Documents\Projects\2016\6-0988-005\Design\Structures\PLANS\DGN\39_I-5898_SMU_2MRL-S20.dgn
TIME: 06:59 AM on Sunday, May 05, 2024

DocuSign Envelope ID: CFF976E0-6897-4697-83E4-E7CC4C08C579

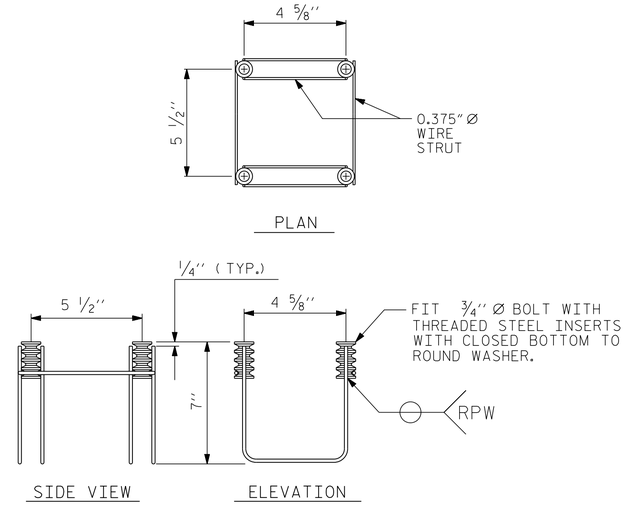

4-BOLT METAL RAIL ANCHOR ASSEMBLY

(60 ASSEMBLIES REQUIRED)

NOTES

STRUCTURAL CONCRETE ANCHOR ASSEMBLY

THE STRUCTURAL CONCRETE ANCHOR ASSEMBLY SHALL CONSIST OF THE FOLLOWING COMPONENTS :

A. FERRULES SHALL BE MADE FROM STEEL MEETING THE REQUIREMENTS OF AASHTO M169, GRADE 12L14 AND SHALL HAVE A MINIMUM LENGTH OF THREADS OF 2'' FOR 3/4'' FERRULES.

B. 4 - 3/4'' Ø X 2 1/2'' BOLTS WITH WASHERS. BOLTS SHALL CONFORM TO THE REQUIREMENTS OF ASTM A307. BOLTS AND WASHERS SHALL BE GALVANIZED. AT THE CONTRACTOR'S OPTION, STAINLESS STEEL BOLTS AND WASHERS MAY BE USED AS AN ALTERNATE FOR THE 3/4'' Ø X 2 1/2'' GALVANIZED BOLTS AND WASHERS. THEY SHALL CONFORM TO OR EXCEED THE MECHANICAL REQUIREMENTS OF ASTM A307. THE USE OF THIS ALTERNATE SHALL BE APPROVED BY THE ENGINEER.

C. WIRE STRUT SHOWN IN THE CONCRETE ANCHOR ASSEMBLY DETAIL IS THE MINIMUM ALLOWABLE SIZE AND SHALL HAVE A MINIMUM TENSILE STRENGTH OF 100,000 PSI. AS AN OPTION, A 7/16'' Ø WIRE STRUT WITH A MINIMUM TENSILE STRENGTH OF 90,000 PSI IS ACCEPTABLE.

D. THE METAL RAIL ANCHOR ASSEMBLIES TO BE HOT DIPPED GALVANIZED TO CONFORM TO REQUIREMENTS OF AASHTO M111.

E. THE COST OF THE METAL RAIL ANCHOR ASSEMBLY WITH BOLTS AND WASHERS COMPLETE IN PLACE SHALL BE INCLUDED IN THE PRICE BID FOR LINEAR FEET OF METAL RAIL.

F. BOLTS TO BE TIGHTENED ONE-HALF TURN WITH A WRENCH FROM A FINGER-TIGHT POSITION.

THE CONTRACTOR MAY USE ADHESIVELY ANCHORED ANCHOR BOLTS IN PLACE OF THE METAL RAIL ANCHOR ASSEMBLY. LEVEL ONE FIELD TESTING IS REQUIRED, AND THE YIELD LOAD OF THE 3/4'' Ø BOLT IS 10 KIPS. FOR ADHESIVELY ANCHORED ANCHOR BOLTS OR DOWELS, SEE THE STANDARD SPECIFICATIONS.

WHEN ADHESIVELY ANCHORED ANCHOR BOLTS ARE USED, BOLTS SHALL MEET THE REQUIREMENTS OF ASTM F593 ALLOY 304 STAINLESS STEEL WITH MINIMUM 75,000 PSI ULTIMATE STRENGTH. NUTS SHALL MEET THE REQUIREMENTS OF ASTM F594 ALLOY 304 STAINLESS STEEL AND WASHERS SHALL MEET THE REQUIREMENTS OF ASTM F844 EXCEPT THEY SHALL BE MADE FROM ALLOY 304 STAINLESS STEEL.

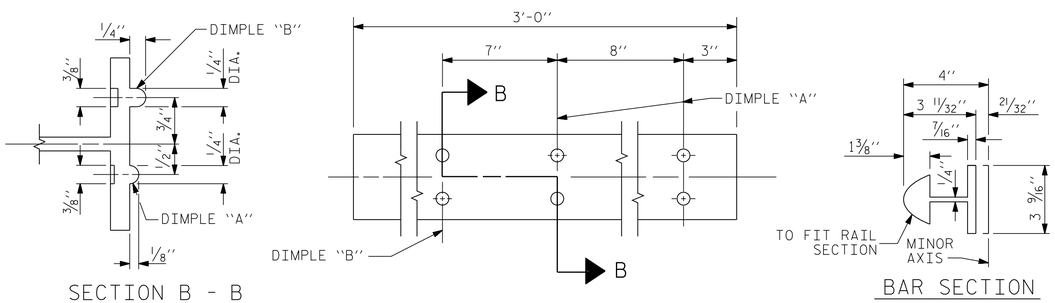

EXPANSION BAR DETAILS

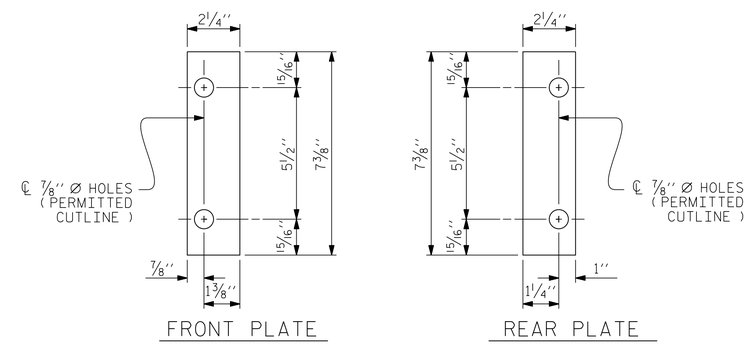

SHIM DETAILS

NOTE :
SHIMS MAY BE CUT ALONG PERMITTED CUTLINE OR SLOTTED TO EDGE OF PLATE TO FACILITATE PLACEMENT.

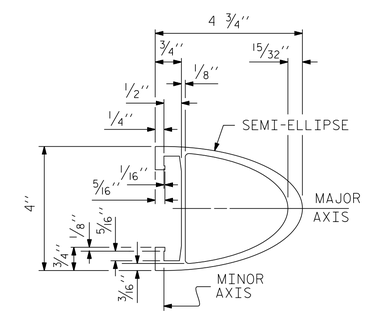

RAIL SECTION

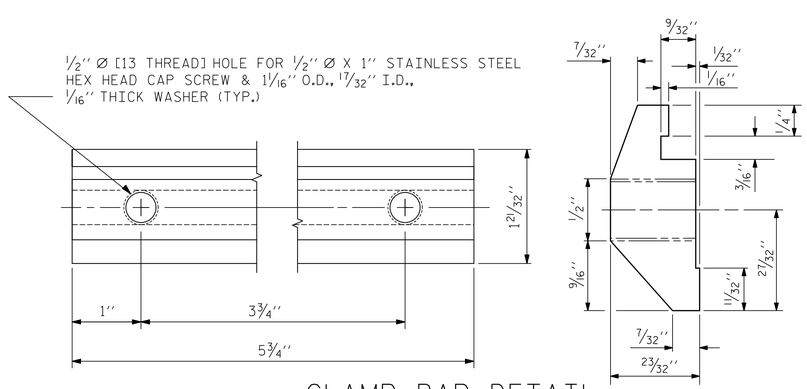

CLAMP BAR DETAIL

(4 REQUIRED PER POST)

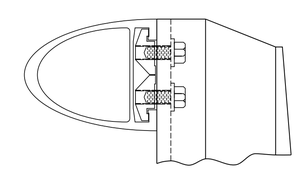

CLAMP ASSEMBLY

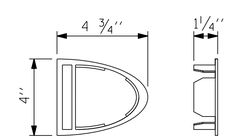

RAIL CAP

PROJECT NO. I-5898
ROCKINGHAM COUNTY
STATION: 119+69.55 -Y-

SHEET 2 OF 5

DocuSigned by: Stephen T. Champion
NORTH CAROLINA PROFESSIONAL SEAL 020123 ENGINEER STEPHEN T. CHAMPION
03/07/2024

STATE OF NORTH CAROLINA
DEPARTMENT OF TRANSPORTATION
RALEIGH

STANDARD

2 BAR METAL RAIL

DOCUMENT NOT CONSIDERED FINAL UNLESS ALL SIGNATURES COMPLETED

Johnson, Mirmiran, & Thompson Inc.
4700 Falls of Neuse Rd, Suite 100,
Raleigh, NC, 27609
License No: C-3097

REVISIONS						SHEET NO.
NO.	BY:	DATE:	NO.	BY:	DATE:	S-21
1			3			TOTAL SHEETS
2			4			39

STD. NO. BMR4

DWN. BY: WDC	DATE: 02/24	DRAWN BY : EEM 6/94	REV. 5/1/06R	KMM/GM
CHKD. BY: GFW	DATE: 02/24	CHECKED BY : RGW 6/94	REV. 10/1/11	MAA/GM
DES. EGR. OF RECORD: STC	DATE: 02/24		REV. 12/17	MAA/THC

wdcrutcher
DGN: pw:\\mt-pw.bentley.com:mt-pw-01\Documents\Projects\2016\6-0988-005\Design\Structures\PLANS\GEN\04J-5898_SMU_BMR2_S21.dgn
TIME: 05:01 AM on Sunday, May 05, 2024

DocuSign Envelope ID: CFF976E0-6897-4697-83E4-E7CC4C08C579

FOR RAIL POST SPACING,
SEE SHEET 4 OF 5.

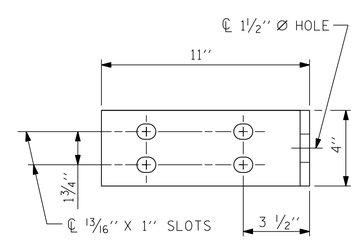

ELEVATION

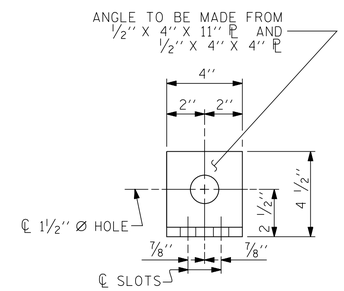

END VIEW (FIX AND EXP.)

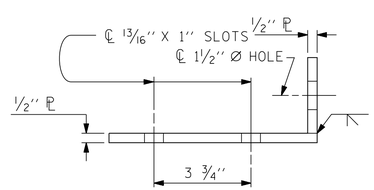

TOP VIEW

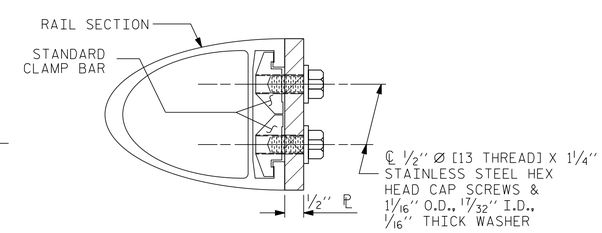

SECTION H-H (FIX)

FIXED

DETAILS FOR ATTACHING METAL RAIL TO END POST

NOTES

STRUCTURAL CONCRETE INSERT

THE STRUCTURAL CONCRETE INSERT ASSEMBLY SHALL CONSIST OF THE FOLLOWING COMPONENTS:

A. FERRULES SHALL BE MADE FROM STEEL MEETING THE REQUIREMENTS OF AASHTO M169, GRADE 12L14 AND SHALL HAVE A MINIMUM LENGTH OF THREADS OF 1½''.

B. 1 - ¾'' Ø X 1⅝'' BOLT WITH WASHER. BOLT SHALL CONFORM TO THE REQUIREMENTS OF ASTM A307. BOLT AND WASHER SHALL BE GALVANIZED. (AT THE CONTRACTOR'S OPTION, STAINLESS STEEL BOLT AND WASHER MAY BE USED AS AN ALTERNATE FOR THE ¾'' Ø X 1⅝'' GALVANIZED BOLT AND WASHER. THEY SHALL CONFORM TO OR EXCEED THE MECHANICAL REQUIREMENTS OF ASTM A307. THE USE OF THIS ALTERNATE SHALL BE APPROVED BY THE ENGINEER.)

C. WIRE STRUT SHOWN IN THE CONCRETE INSERT ASSEMBLY DETAIL IS THE MINIMUM ALLOWABLE SIZE AND SHALL HAVE A MINIMUM TENSILE STRENGTH OF 100,000 PSI. AS AN OPTION, A 7/16'' Ø WIRE STRUT WITH A MINIMUM TENSILE STRENGTH OF 90,000 PSI IS ACCEPTABLE.

NOTES

METAL RAIL TO END POST CONNECTION

THE METAL RAIL TO END POST CONNECTION SHALL CONSIST OF THE FOLLOWING COMPONENTS:

A. ½'' PLATES SHALL CONFORM TO AASHTO M270 GRADE 36 AND SHALL BE GALVANIZED AFTER FABRICATION.

B. ¾'' STRUCTURAL CONCRETE INSERT SHALL HAVE A WORKING LOAD SHEAR CAPACITY OF 4800 LBS. THE FERRULES SHALL ENGAGE A ¾''Ø X 1⅝'' BOLT WITH 2'' O.D. WASHER IN PLACE. THE ¾''Ø X 1⅝'' BOLT SHALL HAVE N. C. THREADS.

C. CAP SCREWS FOR RAIL ATTACHMENT TO ANGLE SHALL CONFORM TO THE REQUIREMENTS OF ASTM F593 ALLOY 305 STAINLESS STEEL. CAP SCREWS TO BE CENTERED IN SLOTS AT 60°F.

D. STANDARD CLAMP BARS (SEE METAL RAIL SHEET).

E. ½'' Ø PIPE SLEEVES (IF REQUIRED) TO BE GALVANIZED.

THE COST OF THE STANDARD CLAMP BARS AND CAP SCREWS USED IN THE METAL RAIL TO END POST CONNECTION SHALL BE INCLUDED IN THE UNIT CONTRACT PRICE BID FOR LINEAR FEET OF 1 OR 2 BAR METAL RAILS.

THE ¾'' STRUCTURAL CONCRETE INSERT WITH BOLT SHALL BE ASSEMBLED IN THE SHOP.

THE COST OF THE ¾'' STRUCTURAL CONCRETE INSERT ASSEMBLY, AND THE ½'' PLATES COMPLETE IN PLACE SHALL BE INCLUDED IN THE VARIOUS PAY ITEMS.

THE CONTRACTOR, AT HIS OPTION, MAY USE AN ADHESIVE BONDING SYSTEM IN LIEU OF THE STRUCTURAL CONCRETE INSERT EMBEDDED IN THE END POST. IF THE ADHESIVE BONDING SYSTEM IS USED, THE ¾'' Ø X 1⅝'' BOLT WITH WASHER SHALL BE REPLACED WITH A ¾''Ø X 6½'' BOLT AND 2'' O.D. WASHER. ALL SPECIFICATIONS THAT APPLY TO THE ¾'' Ø X 1⅝'' BOLT SHALL APPLY TO THE ¾''Ø X 6 ½'' BOLT. FIELD TESTING OF THE ADHESIVE BONDING SYSTEM IS NOT REQUIRED.

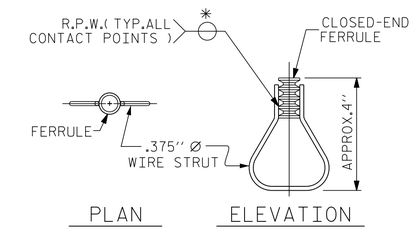

STRUCTURAL CONCRETE INSERT

* EACH WELDED ATTACHMENT OF WIRE TO FERRULE SHALL DEVELOP THE TENSILE STRENGTH OF THE WIRE.

PROJECT NO. I-5898
ROCKINGHAM COUNTY
STATION: 119+69.55 -Y-

SHEET 3 OF 5

DocuSigned by: Stephen T. Champion
NORTH CAROLINA PROFESSIONAL SEAL 020123 ENGINEER STEPHEN T. CHAMPION
05/07/2024

STATE OF NORTH CAROLINA
DEPARTMENT OF TRANSPORTATION
RALEIGH

STANDARD

RAIL POST SPACINGS
AND
END OF RAIL DETAILS
(TWO BAR METAL RAIL)

REVISIONS						SHEET NO.
NO.	BY:	DATE:	NO.	BY:	DATE:	S-22
1			3			TOTAL SHEETS
2			4			39

STD. NO. BMR2

DOCUMENT NOT CONSIDERED FINAL
UNLESS ALL SIGNATURES COMPLETED

Johnson, Mirmiran, & Thompson Inc.
4700 Falls of Neuse Rd, Suite 100,
Raleigh, NC, 27609
License No: C-3097

DWN. BY: WDC	DATE: 02/24	DRAWN BY : FCJ 1/88	REV. 5/1/06	TLA/GM
CHKD. BY: GFW	DATE: 02/24	CHECKED BY : CRK 3/89	REV. 10/1/11	MAA/GM
DES. EGR. OF RECORD: STC	DATE: 02/24		REV. 12/17	MAA/THC

w:\crutcher
DGN: pw:\\mt-pw.bentley.com:mt-pw-01\Documents\Projects\2016\6-0988-005\Design\Structures\PLANS\DGN\043_I-5898_SMU_2MR3_S22.dgn
TIME: 08:17 AM on Sunday, May 05, 2024

DocuSign Envelope ID: CFF976E0-6897-4697-83E4-E7CC4C08C579

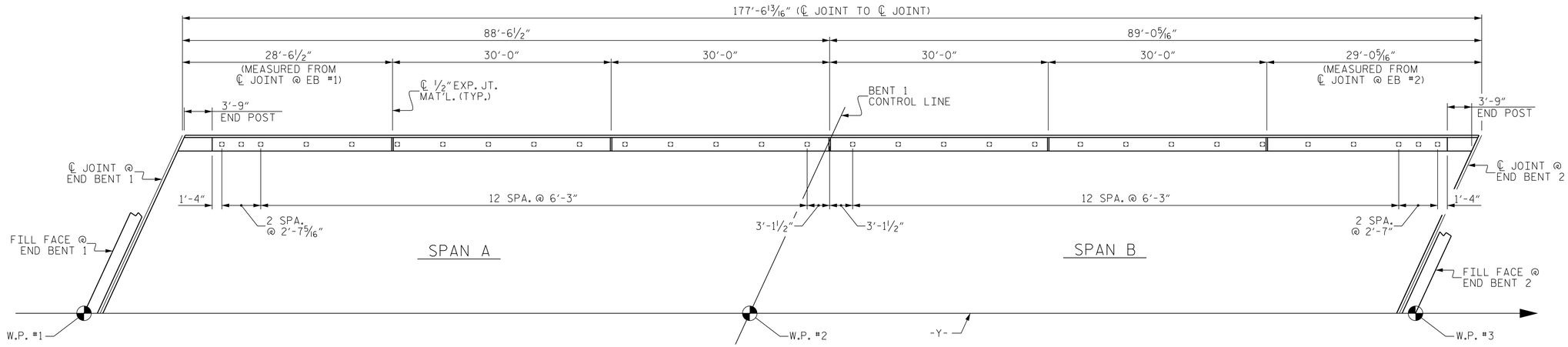

PLAN OF RAIL POST SPACINGS

(LEFT SIDE SHOWN, RIGHT SIDE SIMILAR)

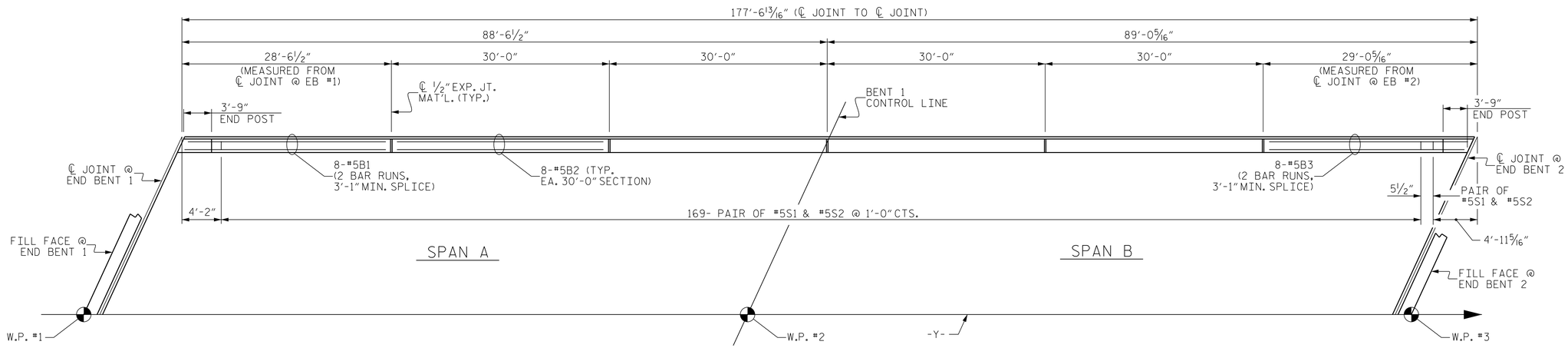

PLAN OF PARAPET

(LEFT SIDE SHOWN, RIGHT SIDE SIMILAR)

#5 S1 BAR MAY BE SHIFTED SLIGHTLY TO MAINTAIN A 2" MINIMUM CLEARANCE TO THE 1/2" EXPANSION JOINT MATERIAL IN THE PARAPET.

PROJECT NO. I-5898
ROCKINGHAM COUNTY
STATION: 119+69.55 -Y-

SHEET 4 OF 5

DocuSigned by: Stephen T. Champion
NORTH CAROLINA PROFESSIONAL SEAL 020123 ENGINEER STEPHEN T. CHAMPION
05/07/2024

STATE OF NORTH CAROLINA
DEPARTMENT OF TRANSPORTATION
RALEIGH

RAIL POST SPACING & CONCRETE PARAPET DETAILS

(TWO BAR METAL RAIL)

REVISIONS						SHEET NO.
NO.	BY:	DATE:	NO.	BY:	DATE:	S-23
1			3			TOTAL SHEETS
2			4			39

DOCUMENT NOT CONSIDERED FINAL UNLESS ALL SIGNATURES COMPLETED

Johnson, Mirmiran, & Thompson Inc.
4700 Falls of Neuse Rd, Suite 100,
Raleigh, NC, 27609
License No: C-3097

DWN. BY: WDC	DATE: 02/24
CHKD. BY: GFW	DATE: 02/24
DES. EGR. OF RECORD: STC	DATE: 02/24

wdcrutcher
DGN: pw:\\jmt-pw.bentley.com:jmt-pw-01\Documents\Projects\2016\6-0988-005\Design\Structures\PLANS\DGN\045_I-5898_SMU_CPD_S23.dgn
TIME: Desir All on Sunday, May 05, 2024

DocuSign Envelope ID: CFF976E0-6897-4697-83E4-E7CC4C08C579

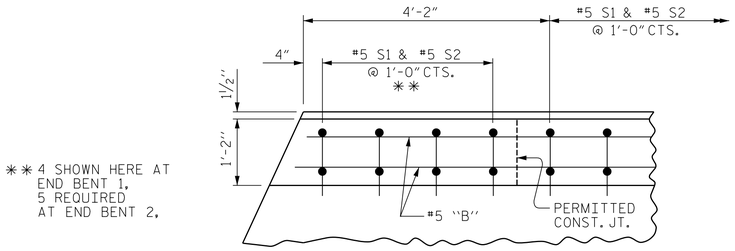

PLAN OF PARAPET

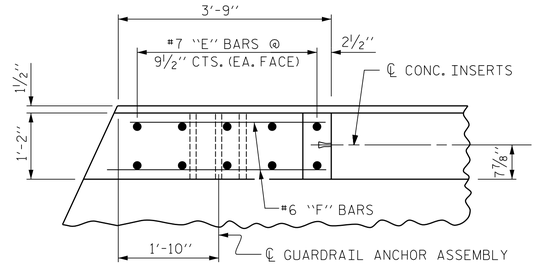

PLAN OF END POST

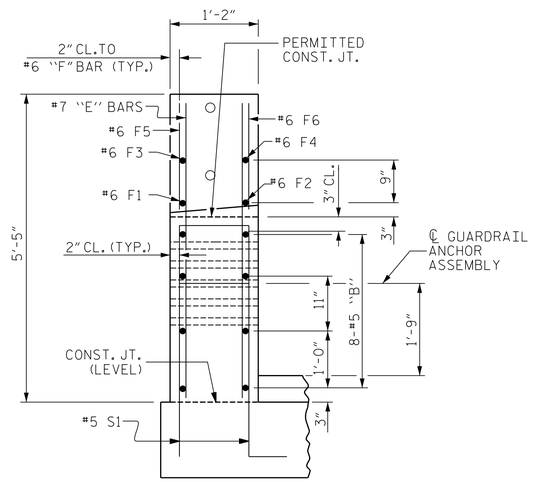

END VIEW

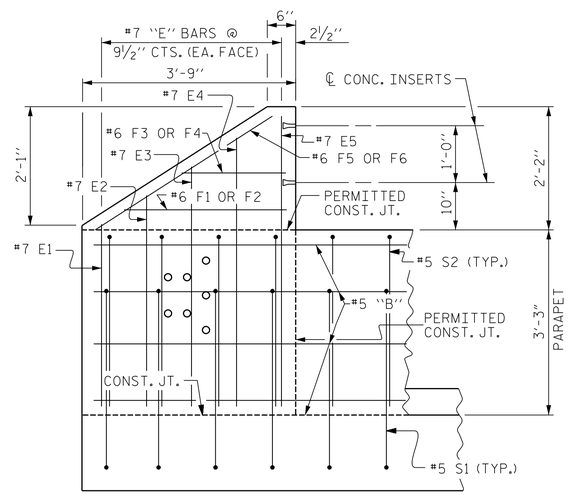

ELEVATION

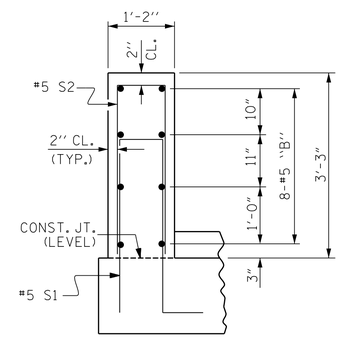

SECTION THROUGH PARAPET

PARAPET AND END POST FOR TWO BAR RAIL

BAR TYPES

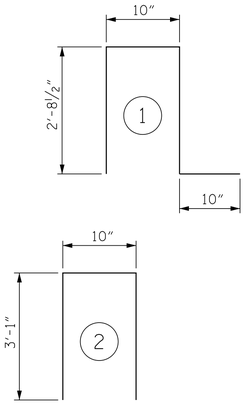

ALL BAR DIMENSIONS ARE OUT TO OUT.

BILL OF MATERIAL

FOR 2 PARAPETS AND 4 END POSTS

BAR	NO.	SIZE	TYPE	LENGTH	WEIGHT
* B1	32	#5	STR	16'-0"	534
* B2	64	#5	STR	29'-6"	1969
* B3	32	#5	STR	16'-2"	540
* E1	8	#7	STR	3'-2"	52
* E2	8	#7	STR	3'-8"	60
* E3	8	#7	STR	4'-2"	68
* E4	8	#7	STR	4'-8"	76
* E5	8	#7	STR	5'-1"	83
* F1	4	#6	STR	3'-0"	18
* F2	4	#6	STR	3'-3"	20
* F3	4	#6	STR	1'-10"	11
* F4	4	#6	STR	2'-1"	13
* F5	4	#6	STR	3'-9"	23
* F6	4	#6	STR	4'-3"	26
* S1	358	#5	1	7'-1"	2645
* S2	358	#5	2	7'-0"	2614

* EPOXY COATED REINFORCING STEEL	8,752 LBS.
CLASS AA CONCRETE	50.8 CU. YDS.
1'-2" x 3'-3" CONCRETE PARAPET	355.14 LIN. FT.

NOTES

ALL REINFORCING STEEL IN PARAPETS AND END POSTS SHALL BE EPOXY COATED.

FOR DETAIL OF CONCRETE INSERT, SEE "RAIL POST SPACINGS AND END OF RAIL DETAIL" SHEET.

GROOVED CONTRACTION JOINTS, ½" IN DEPTH, SHALL BE TOOLED IN ALL EXPOSED FACES OF THE PARAPET AND IN ACCORDANCE WITH ARTICLE 825-10(B) OF THE STANDARD SPECIFICATIONS. A CONTRACTION JOINT SHALL BE LOCATED AT EACH THIRD POINT BETWEEN PARAPET EXPANSION JOINTS. ONLY ONE CONTRACTION JOINT IS REQUIRED AT MIDPOINT OF PARAPET SEGMENTS LESS THAN 20 FEET IN LENGTH AND NO CONTRACTION JOINTS ARE REQUIRED FOR THOSE SEGMENTS LESS THAN 10 FEET IN LENGTH.

PARAPET IN THE SPAN SHALL NOT BE CAST UNTIL ALL SLAB CONCRETE IN THE SPAN HAS BEEN CAST AND HAS REACHED A MINIMUM COMPRESSIVE STRENGTH OF 3,000 PSI.

FOR DETAIL OF GUARDRAIL ANCHOR ASSEMBLY, SEE "GUARDRAIL ANCHORAGE DETAILS FOR METAL RAILS" SHEET.

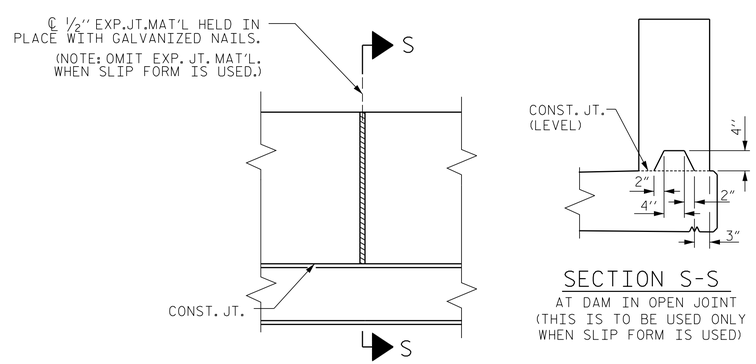

ELEVATION AT EXPANSION JOINTS

SECTION S-S
AT DAM IN OPEN JOINT
(THIS IS TO BE USED ONLY
WHEN SLIP FORM IS USED)

CONCRETE PARAPET DETAILS

PROJECT NO. I-5898
ROCKINGHAM COUNTY
STATION: 119+69.55 -Y-

SHEET 5 OF 5

DocuSigned by: Stephen T. Champion
NORTH CAROLINA PROFESSIONAL SEAL 020123 ENGINEER STEPHEN T. CHAMPION
05/07/2024

STATE OF NORTH CAROLINA
DEPARTMENT OF TRANSPORTATION
RALEIGH

CONCRETE PARAPET AND END POST DETAILS

(TWO BAR METAL RAIL)

DOCUMENT NOT CONSIDERED FINAL UNLESS ALL SIGNATURES COMPLETED

Johnson, Mirmiran, & Thompson Inc.
4700 Falls of Neuse Rd, Suite 100,
Raleigh, NC. 27609
License No: C-3097

REVISIONS						SHEET NO.
NO.	BY:	DATE:	NO.	BY:	DATE:	S-24
1			3			TOTAL SHEETS
2			4			39

DWN. BY: WDC	DATE: 02/24
CHKD. BY: GFW	DATE: 02/24
DES. EGR. OF RECORD: STC	DATE: 02/24

wdcrutcher
DGN: Dev:\\jmt-pw.bentley.com:jmt-pw-01\Documents\Projects\2016\16-0388-005\Design\Structures\PLANS\DGN\04T_I-5898_SMU_CP02_S24.dgn
TIME: 05:01 AM on Sunday, May 05, 2024

DocuSign Envelope ID: CFF976E0-6897-4697-83E4-E7CC4C08C579

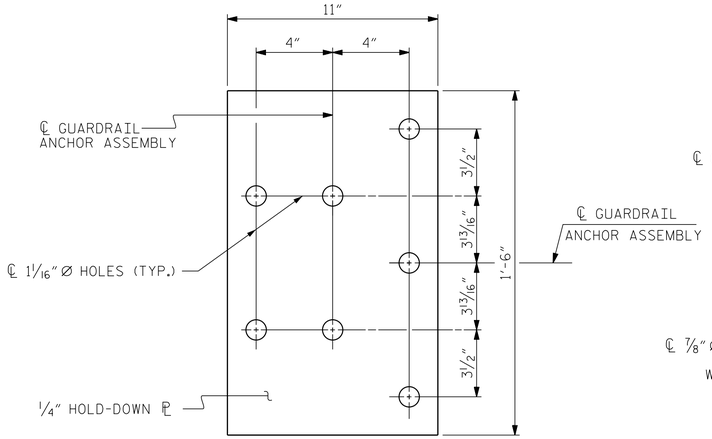

PLAN

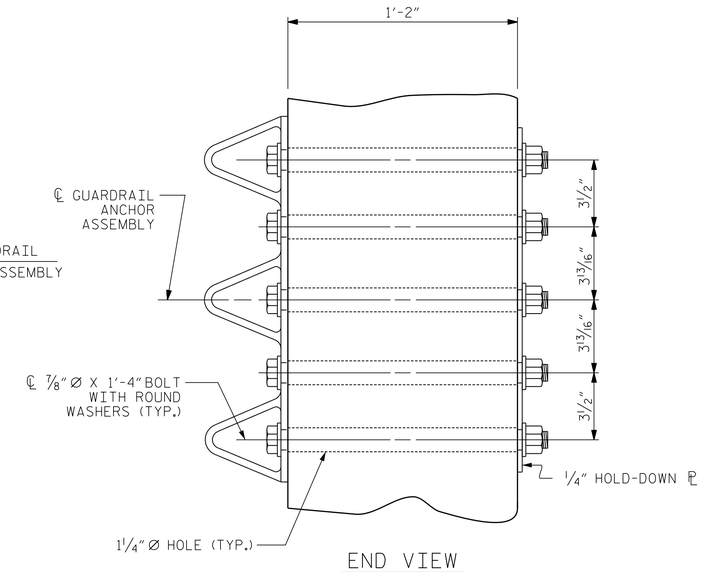

END VIEW

GUARDRAIL ANCHOR ASSEMBLY DETAILS

NOTES

THE GUARDRAIL ANCHOR ASSEMBLY SHALL CONSIST OF A 1/4" HOLD DOWN PLATE AND 7 - 7/8" Ø BOLTS WITH NUTS AND WASHERS.

THE HOLD-DOWN PLATE SHALL CONFORM TO AASHTO M270 GRADE 36. AFTER FABRICATION, THE HOLD-DOWN PLATE SHALL BE HOT-DIP GALVANIZED IN ACCORDANCE WITH AASHTO M111.

BOLTS SHALL CONFORM TO THE REQUIREMENTS OF ASTM A307 AND NUTS SHALL CONFORM TO THE REQUIREMENTS OF AASHTO M291. BOLTS, NUTS AND WASHERS SHALL BE GALVANIZED. AT THE CONTRACTOR'S OPTION, STAINLESS STEEL BOLTS, NUTS AND WASHERS MAY BE USED AS AN ALTERNATE FOR THE 7/8" Ø GALVANIZED BOLTS, NUTS AND WASHERS. THEY SHALL CONFORM TO OR EXCEED THE MECHANICAL REQUIREMENTS OF ASTM A307. THE USE OF THIS ALTERNATE SHALL BE APPROVED BY THE ENGINEER.

THE GUARDRAIL ANCHOR ASSEMBLY IS REQUIRED AT ALL POINTS WHERE APPROACH GUARDRAIL IS TO BE ATTACHED TO THE END OF THE PARAPET. FOR POINTS OF ATTACHMENT, SEE SKETCH.

AFTER INSTALLATION, THE EXPOSED THREAD OF THE BOLT SHALL BE BURRED WITH A SHARP POINTED TOOL.

THE COST OF THE GUARDRAIL ANCHOR ASSEMBLIES WITH BOLTS, NUTS AND WASHERS COMPLETE IN PLACE, SHALL BE INCLUDED IN THE VARIOUS PAY ITEMS.

THE VERTICAL REINFORCING BARS MAY BE SHIFTED SLIGHTLY IN THE END POST TO CLEAR ASSEMBLY BOLTS.

THE 1 1/4" Ø HOLES SHALL BE FORMED OR DRILLED WITH A CORE BIT. IMPACT TOOLS WILL NOT BE PERMITTED. ANY CONCRETE DAMAGED BY THIS WORK SHALL BE REPAIRED TO THE SATISFACTION OF THE ENGINEER.

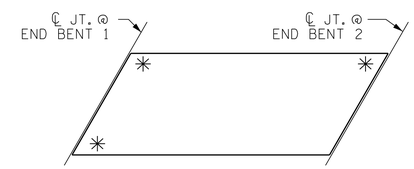

SKETCH SHOWING POINTS OF ATTACHMENT

* LOCATION OF GUARDRAIL ATTACHMENT

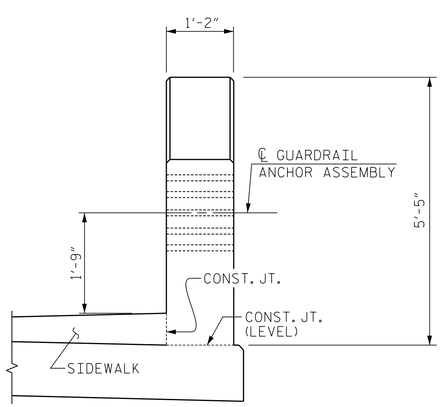

END VIEW
(TWO BAR METAL RAIL)

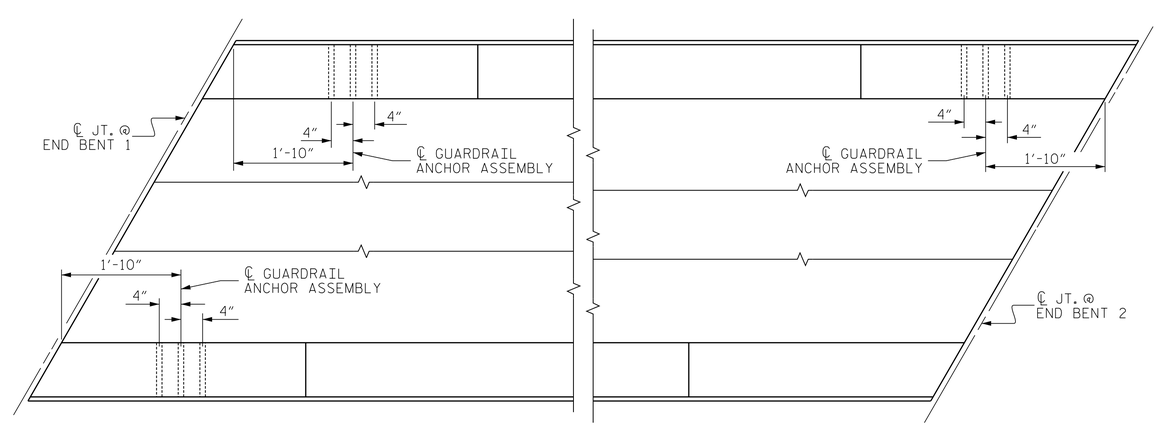

PLAN

LOCATION OF GUARDRAIL ANCHOR AT END POST

PROJECT NO. I-5898
ROCKINGHAM COUNTY
STATION: 119+69.55 -Y-

DocuSigned by: Stephen T. Champion
NORTH CAROLINA PROFESSIONAL SEAL 020123 ENGINEER STEPHEN T. CHAMPION
03/07/2024

STATE OF NORTH CAROLINA
DEPARTMENT OF TRANSPORTATION
RALEIGH

STANDARD
GUARDRAIL ANCHORAGE DETAILS FOR METAL RAILS

DOCUMENT NOT CONSIDERED FINAL UNLESS ALL SIGNATURES COMPLETED

Johnson, Mirmiran, & Thompson Inc.
4700 Falls of Neuse Rd, Suite 100,
Raleigh, NC, 27609
License No: C-3097

REVISIONS						SHEET NO.
NO.	BY:	DATE:	NO.	BY:	DATE:	S-25
1			3			TOTAL SHEETS
2			4			39

DWN. BY: WDC	DATE: 02/24	DRAWN BY : MAA 5/10	REV. 1/15	MAA/TMG	(SHT 5a) STD. NO. GRA3
CHKD. BY: GFW	DATE: 02/24	CHECKED BY : GM 5/10	REV. 12/17	MAA/THC	
DES. EGR. OF RECORD: STC	DATE: 02/24		REV. 5/18	MAA/THC	

wdcrutcher
DGN: pw:\\mt-pw.bentley.com:mt-pw-01\Documents\Projects\2016-0988-005\Design\Structures\PLANS\GEN\049_I-5898_SMU_GRA1_S25.dgn
TIME: 06:01 AM on Sunday, May 05, 2024

DocuSign Envelope ID: CFF976E0-6897-4697-83E4-E7CC4C08C579

BILL OF MATERIAL

BAR	NO.	SIZE	TYPE	LENGTH	WEIGHT	BAR	NO.	SIZE	TYPE	LENGTH	WEIGHT	BAR	NO.	SIZE	TYPE	LENGTH	WEIGHT
✳ A1	568	#5	STR	38'-10"	23,006	✳ A158	2	#5	STR	12'-7"	26	A249	2	#5	STR	22'-4"	47
A2	568	#5	STR	38'-8"	22,907	✳ A159	2	#5	STR	11'-6"	24	A250	2	#5	STR	21'-3"	44
						✳ A160	2	#5	STR	10'-5"	22	A251	2	#5	STR	20'-2"	42
✳ A101	4	#5	STR	38'-4"	160	✳ A161	2	#5	STR	9'-4"	19	A252	2	#5	STR	19'-1"	40
✳ A102	4	#5	STR	37'-10"	158	✳ A162	2	#5	STR	8'-3"	17	A253	2	#5	STR	18'-0"	38
✳ A103	4	#5	STR	37'-3"	155	✳ A163	2	#5	STR	7'-2"	15	A254	2	#5	STR	16'-11"	35
✳ A104	4	#5	STR	36'-9"	153	✳ A164	2	#5	STR	6'-1"	13	A255	2	#5	STR	15'-10"	33
✳ A105	4	#5	STR	36'-2"	151	✳ A165	2	#5	STR	5'-0"	10	A256	2	#5	STR	14'-9"	31
✳ A106	4	#5	STR	35'-8"	149	✳ A166	2	#5	STR	3'-11"	8	A257	2	#5	STR	13'-8"	29
✳ A107	4	#5	STR	35'-1"	146	✳ A167	2	#5	STR	2'-10"	6	A258	2	#5	STR	12'-7"	26
✳ A108	4	#5	STR	34'-7"	144	✳ A168	2	#5	STR	1'-9"	4	A259	2	#5	STR	11'-6"	24
✳ A109	4	#5	STR	34'-0"	142							A260	2	#5	STR	10'-5"	22
✳ A110	4	#5	STR	33'-6"	140	A201	4	#5	STR	38'-2"	159	A261	2	#5	STR	9'-4"	19
✳ A111	4	#5	STR	32'-11"	137	A202	4	#5	STR	37'-7"	157	A262	2	#5	STR	8'-3"	17
✳ A112	4	#5	STR	32'-5"	135	A203	4	#5	STR	37'-1"	155	A263	2	#5	STR	7'-2"	15
✳ A113	4	#5	STR	31'-10"	133	A204	4	#5	STR	36'-6"	152	A264	2	#5	STR	6'-1"	13
✳ A114	4	#5	STR	31'-4"	131	A205	4	#5	STR	36'-0"	150	A265	2	#5	STR	5'-0"	10
✳ A115	2	#5	STR	59'-1"	123	A206	4	#5	STR	35'-5"	148	A266	2	#5	STR	3'-11"	8
✳ A116	2	#5	STR	58'-0"	121	A207	4	#5	STR	34'-11"	146	A267	2	#5	STR	2'-10"	6
✳ A117	2	#5	STR	56'-11"	119	A208	4	#5	STR	34'-4"	143	A268	2	#5	STR	1'-9"	4
✳ A118	2	#5	STR	55'-10"	116	A209	4	#5	STR	33'-10"	141						
✳ A119	2	#5	STR	54'-9"	114	A210	4	#5	STR	33'-3"	139	✳ B1	75	#5	STR	36'-8"	2,868
✳ A120	2	#5	STR	53'-8"	112	A211	4	#5	STR	32'-9"	137	✳ B2	76	#5	STR	22'-2"	1,757
✳ A121	2	#5	STR	52'-7"	110	A212	4	#5	STR	32'-2"	134	✳ B3	76	#5	STR	43'-9"	3,468
✳ A122	2	#5	STR	51'-6"	107	A213	4	#5	STR	31'-8"	132	✳ B4	304	#4	STR	30'-4"	6,160
✳ A123	2	#5	STR	50'-5"	105	A214	4	#5	STR	31'-1"	130	B5	83	#5	STR	45'-8"	3,953
✳ A124	2	#5	STR	49'-4"	103	A215	2	#5	STR	59'-1"	123	B6	92	#5	STR	54'-6"	5,230
✳ A125	2	#5	STR	48'-3"	101	A216	2	#5	STR	58'-0"	121	B7	368	#5	STR	33'-5"	12,826
✳ A126	2	#5	STR	47'-2"	98	A217	2	#5	STR	56'-11"	119	✳ B8	50	#4	STR	37'-0"	1,236
✳ A127	2	#5	STR	46'-1"	96	A218	2	#5	STR	55'-10"	116						
✳ A128	2	#5	STR	45'-0"	94	A219	2	#5	STR	54'-9"	114	✳ G1	4	#5	STR	42'-8"	178
✳ A129	2	#5	STR	43'-11"	92	A220	2	#5	STR	53'-8"	112	✳ G2	350	#4	STR	5'-0"	1,169
✳ A130	2	#5	STR	42'-10"	89	A221	2	#5	STR	52'-7"	110	✳ G3	4	#4	STR	5'-3"	14
✳ A131	2	#5	STR	41'-9"	87	A222	2	#5	STR	51'-6"	107	✳ G4	4	#4	STR	5'-6"	15
✳ A132	2	#5	STR	40'-8"	85	A223	2	#5	STR	50'-5"	105						
✳ A133	2	#5	STR	39'-7"	83	A224	2	#5	STR	49'-4"	103	✳ K1	8	#8	1	13'-6"	288
✳ A134	2	#5	STR	38'-6"	80	A225	2	#5	STR	48'-3"	101	✳ K2	24	#8	2	20'-1"	1,287
✳ A135	2	#5	STR	37'-5"	78	A226	2	#5	STR	47'-2"	98	✳ K3	42	#6	STR	8'-7"	541
✳ A136	2	#5	STR	36'-4"	76	A227	2	#5	STR	46'-1"	96						
✳ A137	2	#5	STR	35'-3"	74	A228	2	#5	STR	45'-0"	94	✳ S1	112	#5	4	6'-3"	730
✳ A138	2	#5	STR	34'-2"	71	A229	2	#5	STR	43'-11"	92	✳ S2	112	#4	3	4'-5"	330
✳ A139	2	#5	STR	33'-1"	69	A230	2	#5	STR	42'-10"	89						
✳ A140	2	#5	STR	32'-0"	67	A231	2	#5	STR	41'-9"	87	✳ U1	108	#4	3	3'-4"	240
✳ A141	2	#5	STR	30'-11"	64	A232	2	#5	STR	40'-8"	85						
✳ A142	2	#5	STR	29'-10"	62	A233	2	#5	STR	39'-7"	83	REINFORCING STEEL					50,365 LBS.
✳ A143	2	#5	STR	28'-10"	60	A234	2	#5	STR	38'-6"	80	✳ EPOXY COATED REINF. STEEL					48,747 LBS.
✳ A144	2	#5	STR	27'-9"	58	A235	2	#5	STR	37'-5"	78						
✳ A145	2	#5	STR	26'-8"	56	A236	2	#5	STR	36'-4"	76						
✳ A146	2	#5	STR	25'-7"	53	A237	2	#5	STR	35'-3"	74						
✳ A147	2	#5	STR	24'-6"	51	A238	2	#5	STR	34'-2"	71						
✳ A148	2	#5	STR	23'-5"	49	A239	2	#5	STR	33'-1"	69						
✳ A149	2	#5	STR	22'-4"	47	A240	2	#5	STR	32'-0"	67						
✳ A150	2	#5	STR	21'-3"	44	A241	2	#5	STR	30'-11"	64						
✳ A151	2	#5	STR	20'-2"	42	A242	2	#5	STR	29'-10"	62						
✳ A152	2	#5	STR	19'-1"	40	A243	2	#5	STR	28'-10"	60						
✳ A153	2	#5	STR	18'-0"	38	A244	2	#5	STR	27'-9"	58						
✳ A154	2	#5	STR	16'-11"	35	A245	2	#5	STR	26'-8"	56						
✳ A155	2	#5	STR	15'-10"	33	A246	2	#5	STR	25'-7"	53						
✳ A156	2	#5	STR	14'-9"	31	A247	2	#5	STR	24'-6"	51						
✳ A157	2	#5	STR	13'-8"	29	A248	2	#5	STR	23'-5"	49						

BAR TYPES

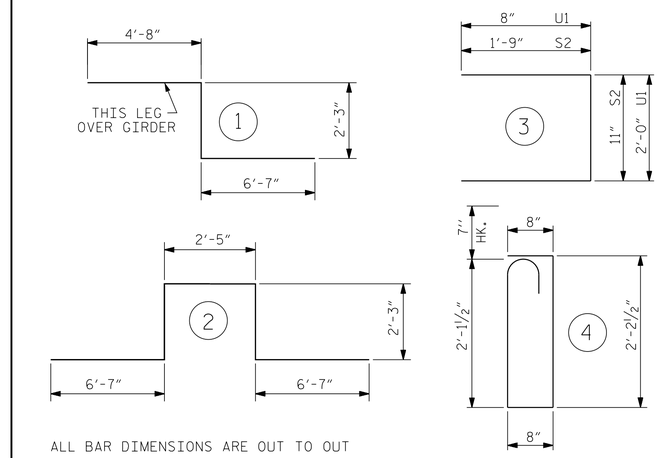

ALL BAR DIMENSIONS ARE OUT TO OUT

SUPERSTRUCTURE BILL OF MATERIAL

	CLASS AA CONCRETE	REINFORCING STEEL	EPOXY COATED REINFORCING STEEL
	(CU. YDS.)	(LBS.)	(LBS.)
POUR 1	195.2	——	——
POUR 2	261.0	——	——
SIDEWALKS	39.3	——	——
TOTALS✳✳	495.5	50,365	48,747

✳✳ QUANTITIES FOR PARAPETS AND END POSTS ARE NOT INCLUDED. QUANTITIES FOR SIDEWALKS ARE INCLUDED.

SUPERSTRUCTURE REINFORCING STEEL LENGTHS ARE BASED ON THE FOLLOWING MINIMUM SPLICE LENGTHS

BAR SIZE	SUPERSTRUCTURE EXCEPT APPROACH SLABS, PARAPET, AND BARRIER RAIL		APPROACH SLABS		PARAPET AND BARRIER RAIL
	EPOXY COATED	UNCOATED	EPOXY COATED	UNCOATED	
#4	1'-11"	1'-7"	1'-11"	1'-7"	2'-6"
#5	2'-5"	2'-0"	2'-5"	2'-0"	3'-1"
#6	2'-10"	2'-5"	3'-7"	2'-5"	3'-8"
#7	4'-2"	2'-9"			
#8	4'-9"	3'-2"			

GROOVING BRIDGE FLOORS

APPROACH SLABS	2,842	SQ.FT.
BRIDGE DECK	10,420	SQ.FT.
TOTAL	13,262	SQ.FT.

PROJECT NO. I-5898

ROCKINGHAM COUNTY

STATION: 119+69.55 -Y-

DocuSigned by: Stephen T. Champion
NORTH CAROLINA PROFESSIONAL SEAL 020123 ENGINEER STEPHEN T. CHAMPION
05/07/2024

STATE OF NORTH CAROLINA
DEPARTMENT OF TRANSPORTATION
RALEIGH

SUPERSTRUCTURE

BILL OF MATERIAL

DOCUMENT NOT CONSIDERED FINAL UNLESS ALL SIGNATURES COMPLETED

Johnson, Mirmiran, & Thompson Inc.
4700 Falls of Neuse Rd, Suite 100,
Raleigh, NC, 27609
License No: C-3097

REVISIONS						SHEET NO.
NO.	BY:	DATE:	NO.	BY:	DATE:	S-26
1			3			TOTAL SHEETS
2			4			39

DWN. BY: WDC DATE: 02/24
CHKD. BY: GFW DATE: 02/24
DES. EGR. OF RECORD: STC DATE: 02/24

wdcrutcher
DGN: pw:\\jmt-pw.bentley.com:jmt-pw-01\Documents\Projects\2016\6-0988-005\Design\Structures\PLANS\DGN\05J_I-5898_SMU_BDMI_S26.dgn
TIME: 06:17 AM on Sunday, May 05, 2024

DocuSign Envelope ID: CFF976E0-6897-4697-83E4-E7CC4C08C579

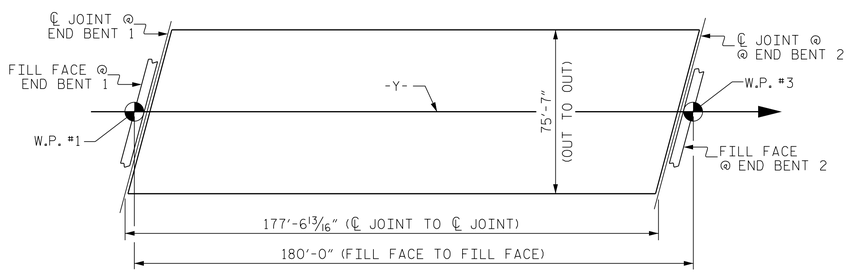

LAYOUT FOR COMPUTING AREA OF REINFORCED CONCRETE DECK SLAB

TOTAL = 13,421 SQ. FT.

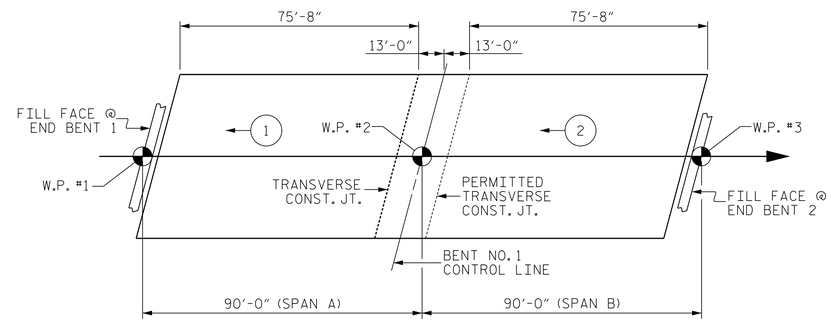

POURING SEQUENCE

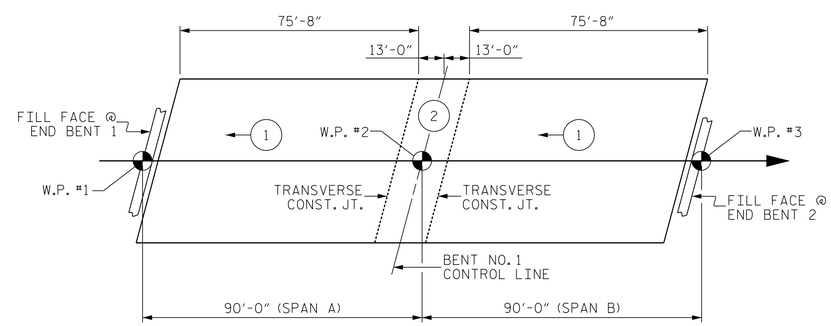

OPTIONAL POURING SEQUENCE

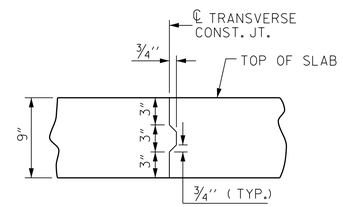

TRANSVERSE CONSTRUCTION JOINT DETAIL

NOTE: REINFORCING STEEL IN SLAB NOT SHOWN. LONGITUDINAL REINFORCING STEEL SHALL BE CONTINUOUS THRU JOINT

PROJECT NO. I-5898

ROCKINGHAM COUNTY

STATION: 119+69.55 -Y-

DocuSigned by: Stephen T. Champion

NORTH CAROLINA PROFESSIONAL SEAL 020123 ENGINEER STEPHEN T. CHAMPION

05/09/2024

DOCUMENT NOT CONSIDERED FINAL UNLESS ALL SIGNATURES COMPLETED

Johnson, Mirmiran, & Thompson Inc.
4700 Falls of Neuse Rd, Suite 100,
Raleigh, NC, 27609
License No: C-3097

STATE OF NORTH CAROLINA
DEPARTMENT OF TRANSPORTATION
RALEIGH

SUPERSTRUCTURE

POURING SEQUENCE & LAYOUT FOR REINFORCED CONCRETE DECK SLAB AREA

REVISIONS						SHEET NO.
NO.	BY:	DATE:	NO.	BY:	DATE:	S-27
1			3			TOTAL SHEETS
2			4			39

DWN. BY: WDC	DATE: 02/24
CHKD. BY: GFW	DATE: 02/24
DES. EGR. OF RECORD: STC	DATE: 02/24

wdcrutcher
DGN: {ws\}{mt-pw.bentley.com}{mt-pw-01\Documents\Projects\2016\6-0988-005\Design\Structures\PLANS\GEN\053_I-5898_SMU_BDMI_S27.dgn
TIME: 06:01 AM on Sunday, May 05, 2024

Docusign Envelope ID: EB12B560-697C-46CD-AC20-71C997E938B0

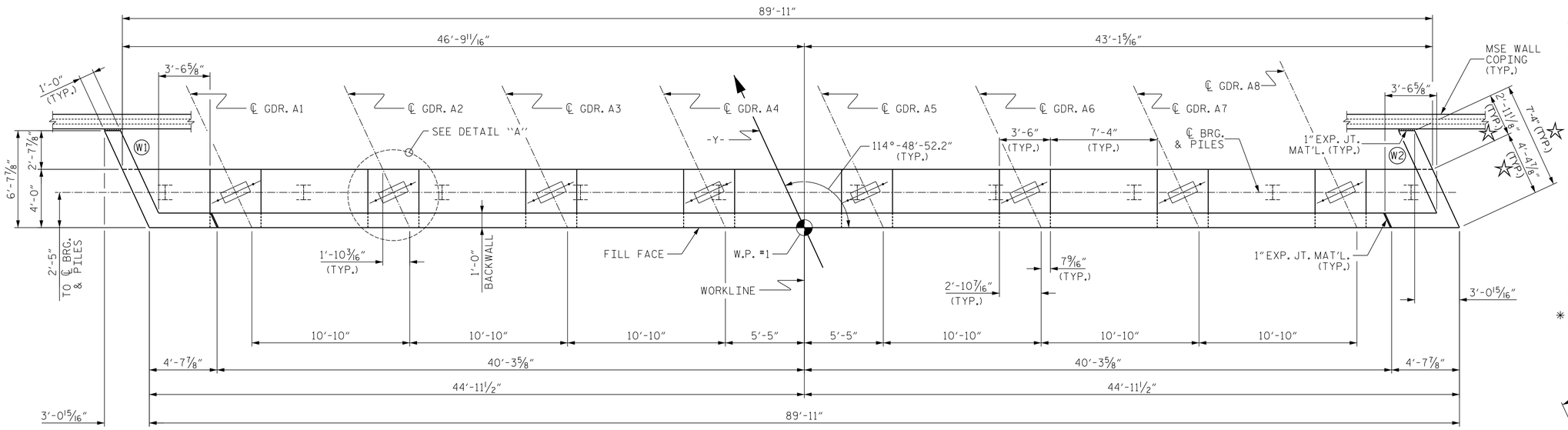

PLAN

WINGS ARE TYPICAL

NOTES

BACKWALL SHALL BE PLACED BEFORE APPLYING THE EPOXY PROTECTIVE COATING.

STIRRUPS AND "U" BARS IN CAP MAY BE SHIFTED AS NECESSARY TO ANCHOR BOLTS.

THE #5 V1 BARS SHALL BE PLACED 2" CLEAR FROM THE TOP OF THE BACKWALL.

THE TOP SURFACE AREAS OF THE END BENT CAP SHALL BE CURED IN ACCORDANCE WITH THE STANDARD SPECIFICATIONS EXCEPT THE MEMBRANE CURING COMPOUND METHOD SHALL NOT BE USED.

THE TOP SURFACE OF THE CAP EXCEPT THE BRIDGE SEAT BUILDUPS SHALL BE SLOPED TRANSVERSELY FROM THE FILL FACE TO THE BACK FACE AT THE RATE OF 2%.

FOR PILE SPLICE DETAILS, SEE SHEET 3 OF 3.

FOR WING DETAILS, SEE SHEET 2 OF 3.

✳ FOR LOCATION OF ELEVATIONS BETWEEN BRIDGE SEAT BUILD-UPS, SEE SECTION A-A ON SHEET 3 OF 3.

TOP OF PILE ELEVATIONS			
1	692.40	6	691.12
2	692.14	7	690.87
3	691.89	8	690.61
4	691.63	9	690.36
5	691.38	10	690.10

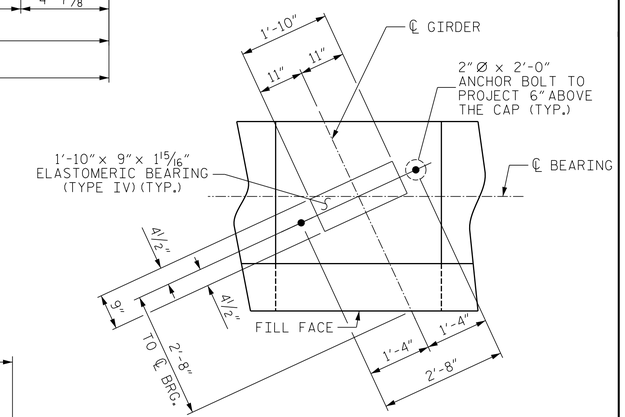

DETAIL "A"

DIMENSIONS ARE TYPICAL

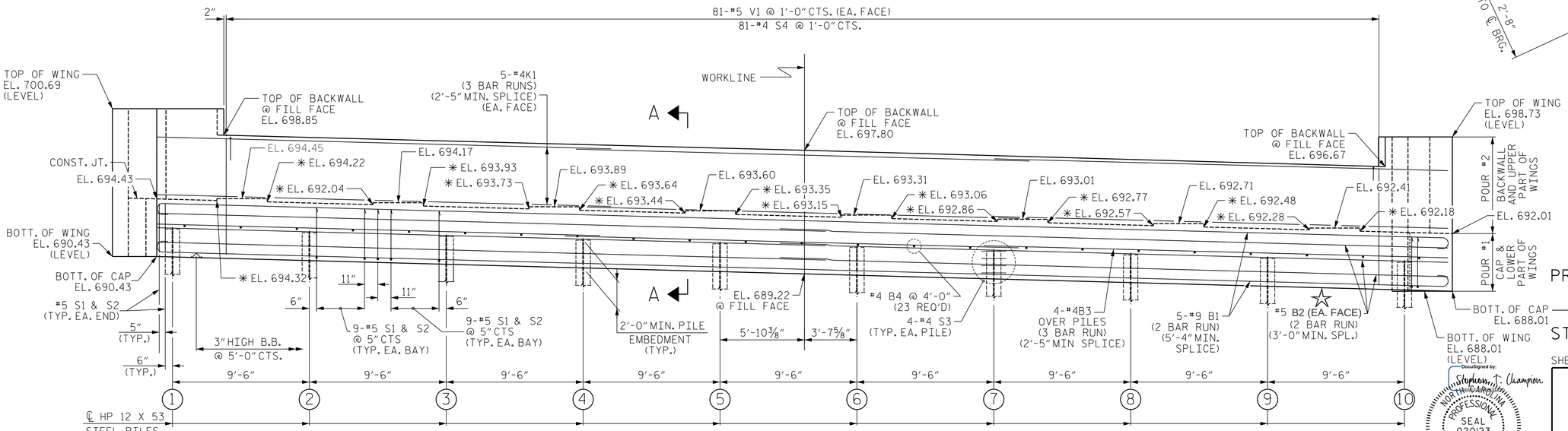

ELEVATION

NOTES, CONT.

☆ STEEL H-PILE POINTS ARE REQUIRED FOR STEEL H-PILES AT END BENTS 1 & 2. SEE SECTION 450 OF THE STANDARD SPECIFICATIONS.

PROJECT NO. I-5898

ROCKINGHAM COUNTY

STATION: 119+69.55 -Y-

SHEET 1 OF 3

SEAL AND SIGNATURE APPLY ONLY TO THOSE ELEMENTS IDENTIFIED WITH A STAR (☆) SYMBOL. NO RESPONSIBILITY IS ASSUMED FOR OTHER ITEMS SHOWN.

DocuSigned by: Stephen T. Champion — NORTH CAROLINA PROFESSIONAL SEAL 020123 ENGINEER STEPHEN T. CHAMPION — 09/07/2024

DocuSigned by: Linda Wilson — NORTH CAROLINA PROFESSIONAL SEAL 042462 ENGINEER LINDSEY F. WILSON — 10/20/2025

DOCUMENT NOT CONSIDERED FINAL UNLESS ALL SIGNATURES COMPLETED

Johnson, Mirmiran, & Thompson Inc.
4700 Falls of Neuse Rd, Suite 100,
Raleigh, NC, 27609
License No: C-3097

STATE OF NORTH CAROLINA
DEPARTMENT OF TRANSPORTATION
RALEIGH

SUBSTRUCTURE

END BENT 1

REVISIONS						SHEET NO.
NO.	BY:	DATE:	NO.	BY:	DATE:	S-28
1			3			TOTAL SHEETS
2			4			39

DWN. BY: WDC	DATE: 02/24
CHKD. BY: GFW	DATE: 02/24
DES. EGR. OF RECORD: STC	DATE: 02/24

wdcrutcher
DGN: pw:\\jmt-pw.bentley.com:jmt-pw-01\Documents\Projects\20161-0988-005\Design\Structures\PLANS\DEN005_I-5898_SMU_E01_S28.dgn
TIME: 06:01 AM on Sunday, May 05, 2024

Docusign Envelope ID: EB12B560-697C-46CD-AC20-71C997E938B0

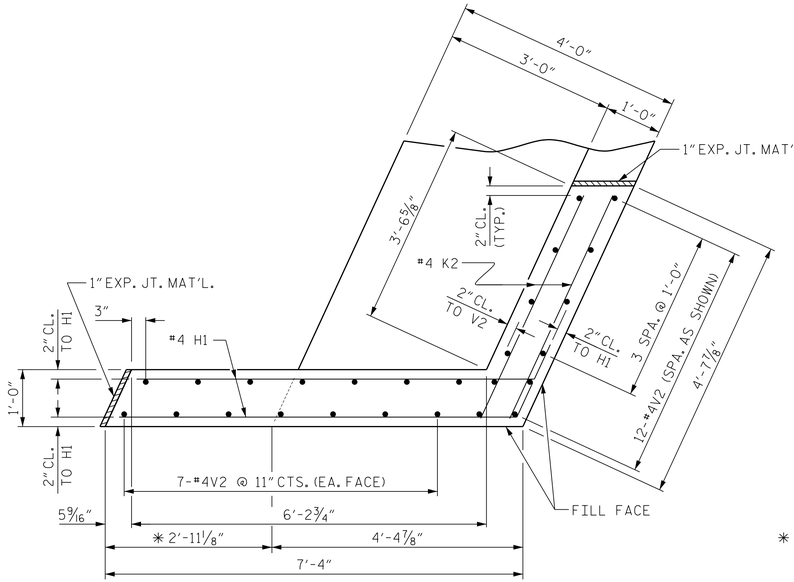

PLAN OF WING (W1)

* WINGWALL EXTENSION DISTANCE TO BE FIELD ADJUSTED AS REQUIRED TO PROVIDE 1" EXPANSION JOINT MATERIAL BETWEEN THE MSE WALL COPING AND THE EXTENDED WINGWALL.

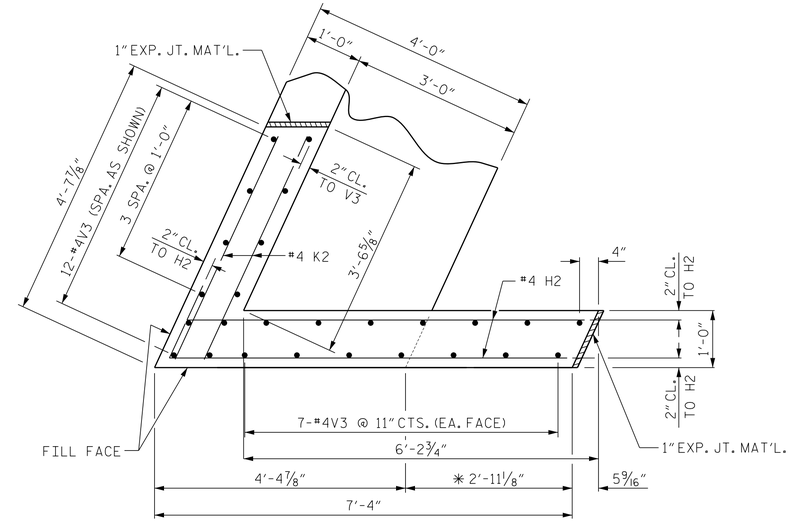

PLAN OF WING (W2)

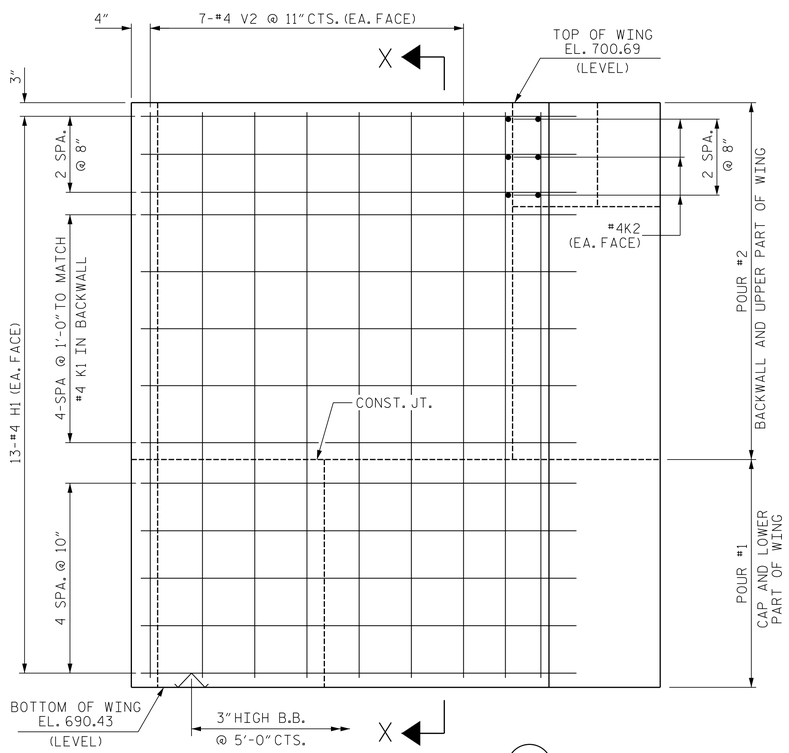

ELEVATION OF WING (W1)

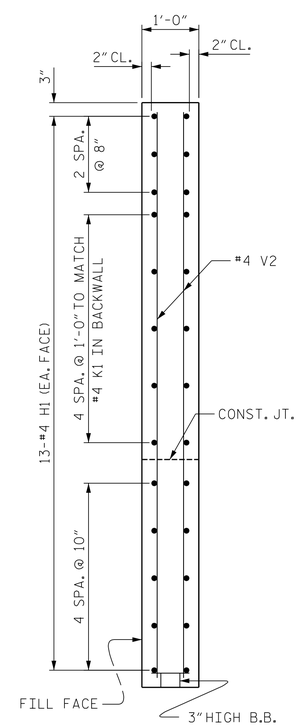

SECTION X-X

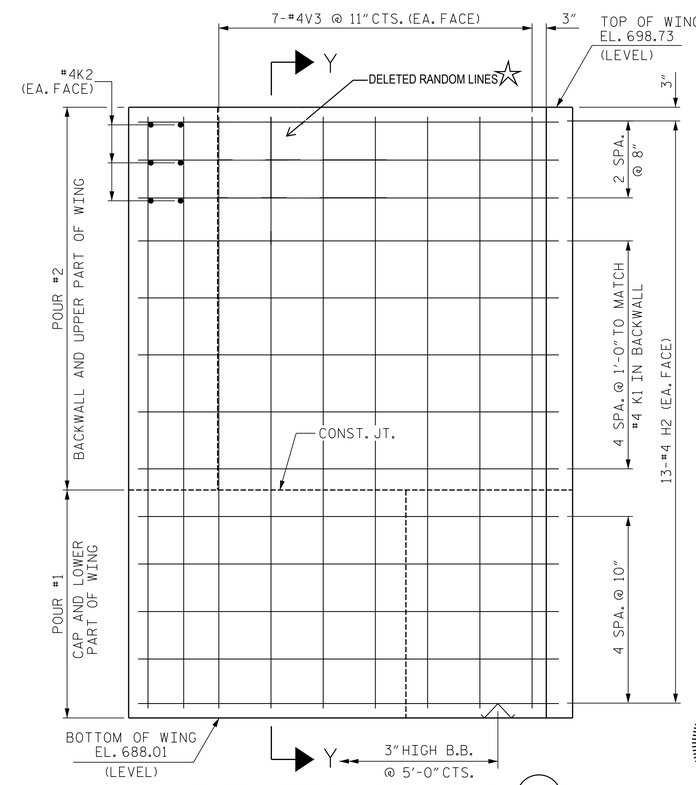

ELEVATION OF WING (W2)

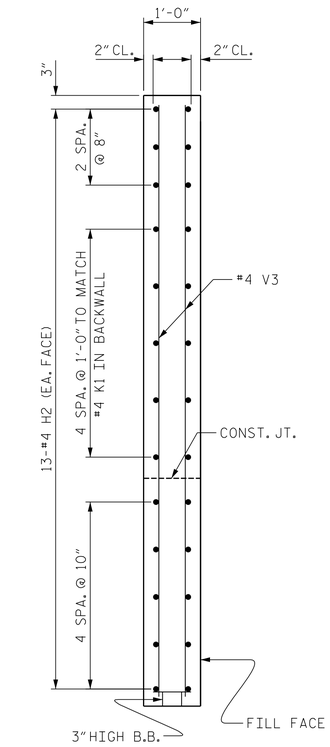

SECTION Y-Y

PROJECT NO. I-5898

ROCKINGHAM COUNTY

STATION: 119+69.55 -Y-

SHEET 2 OF 3

STATE OF NORTH CAROLINA
DEPARTMENT OF TRANSPORTATION
RALEIGH

SUBSTRUCTURE

END BENT 1

SEAL AND SIGNATURE APPLY ONLY TO THOSE ELEMENTS IDENTIFIED WITH A STAR (☆) SYMBOL. NO RESPONSIBILITY IS ASSUMED FOR OTHER ITEMS SHOWN.

NORTH CAROLINA PROFESSIONAL SEAL 020123 ENGINEER STEPHEN T. CHAMPION 05/07/2024

NORTH CAROLINA PROFESSIONAL SEAL 049282 ENGINEER MADDELEN F. WILSON 10/20/2025

DOCUMENT NOT CONSIDERED FINAL UNLESS ALL SIGNATURES COMPLETED

Johnson, Mirmiran, & Thompson Inc.
4700 Falls of Neuse Rd, Suite 100,
Raleigh, NC. 27609
License No: C-3097

REVISIONS							SHEET NO.
NO.	BY:	DATE:	NO.	BY:	DATE:		S-29
1			3				TOTAL SHEETS
2			4				39

DWN. BY: WDC	DATE: 02/24
CHKD. BY: GFW	DATE: 02/24
DES. EGR. OF RECORD: STC	DATE: 02/24

wdcrutcher
DGN: Dw:\\jmt-pw.bentley.com:jmt_pw_01\Documents\Projects\2016\16-0388-005\Design\Structures\PLANS\DGN\057_I-5898_SMU_E102_S29.dgn
TIME: 05:01 AM on Sunday, May 05, 2024

DocuSign Envelope ID: CFF976E0-6897-4697-83E4-E7CC4C08C579

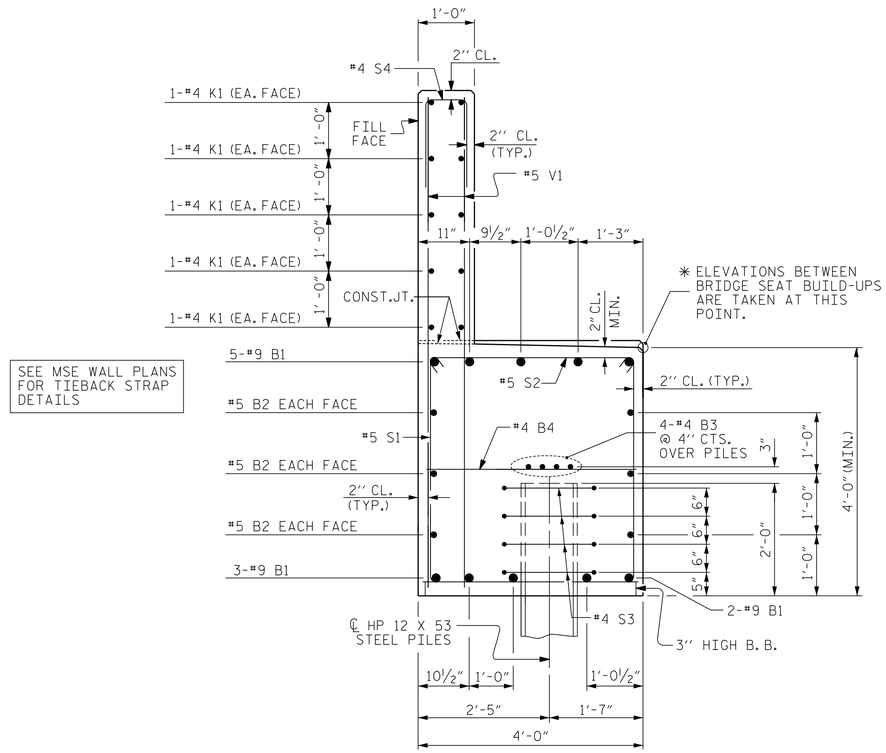

SEE MSE WALL PLANS FOR TIEBACK STRAP DETAILS

SECTION A-A

BAR TYPES

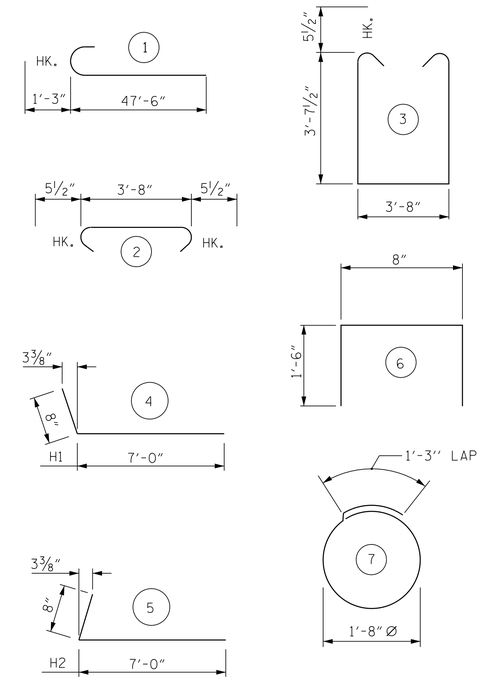

ALL BAR DIMENSIONS ARE OUT TO OUT.

BILL OF MATERIAL
END BENT 1

BAR	NO.	SIZE	TYPE	LENGTH	WEIGHT
B1	20	#9	1	48'-9"	3315
B2	12	#5	STR	46'-5"	581
B3	12	#4	STR	31'-6"	253
B4	23	#4	STR	3'-8"	56
H1	26	#4	4	7'-8"	133
H2	26	#4	5	7'-8"	133
K1	30	#4	STR	31'-6"	631
K2	12	#4	STR	4'-3"	34
S1	175	#5	3	11'-10"	2160
S2	175	#5	2	4'-7"	837
S3	40	#4	7	6'-6"	174
S4	81	#4	6	3'-8"	198
V1	162	#5	STR	8'-1"	1366
V2	26	#4	STR	9'-10"	171
V3	26	#4	STR	10'-3"	178

REINFORCING STEEL 10,220 LBS.

CLASS A CONCRETE BREAKDOWN
POUR #1 CAP, LOWER WINGS 55.3 C.Y.
POUR #2 BACKWALL & UPPER WINGS 18.6 C.Y.
TOTAL 73.9 C.Y.

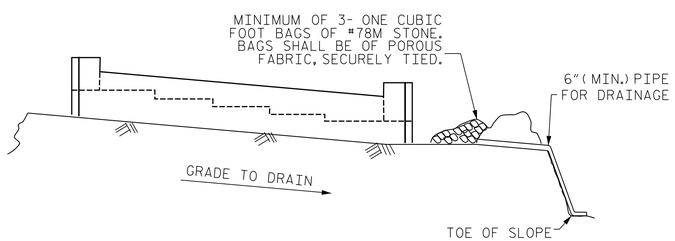

BAGGED STONE AND PIPE SHALL BE PLACED IMMEDIATELY AFTER COMPLETION OF END BENT EXCAVATION. PIPE MAY BE EITHER CONCRETE, CORRUGATED STEEL, CORRUGATED ALUMINUM ALLOY, OR CORRUGATED PLASTIC. PERFORATED PIPE WILL NOT BE ALLOWED.

BAGGED STONE SHALL REMAIN IN PLACE UNTIL THE ENGINEER DIRECTS THAT IT BE REMOVED. THE CONTRACTOR SHALL REMOVE AND DISPOSE OF SILT ACCUMULATIONS AT BAGGED STONE WHEN SO DIRECTED BY THE ENGINEER. BAGS SHALL BE REMOVED AND REPLACED WHENEVER THE ENGINEER DETERMINES THAT THEY HAVE DETERIORATED AND LOST THEIR EFFECTIVENESS.

NO SEPARATE PAYMENT WILL BE MADE FOR THIS WORK AND THE ENTIRE COST OF THIS WORK SHALL BE INCLUDED IN THE UNIT CONTRACT PRICE BID FOR THE SEVERAL PAY ITEMS.

TEMPORARY DRAINAGE AT END BENT

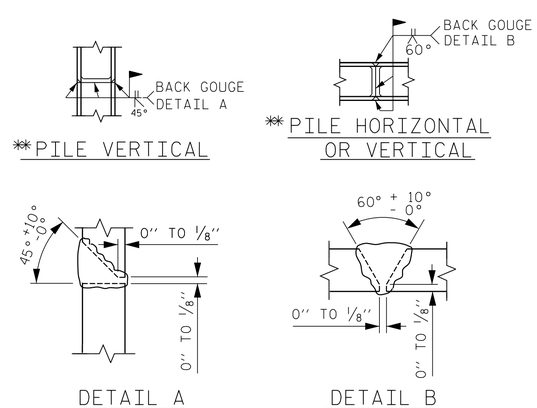

PILE SPLICE DETAILS

** POSITION OF PILE DURING WELDING.

PROJECT NO. I-5898
ROCKINGHAM COUNTY
STATION: 119+69.55 -Y-

SHEET 3 OF 3

STATE OF NORTH CAROLINA
DEPARTMENT OF TRANSPORTATION
RALEIGH

SUBSTRUCTURE

END BENT 1

DocuSigned by: Stephen T. Champion
NORTH CAROLINA PROFESSIONAL SEAL 020123 ENGINEER STEPHEN T. CHAMPION
5/14/2024

DOCUMENT NOT CONSIDERED FINAL UNLESS ALL SIGNATURES COMPLETED

Johnson, Mirmiran, & Thompson Inc.
4700 Falls of Neuse Rd, Suite 100,
Raleigh, NC, 27609
License No: C-3097

REVISIONS						SHEET NO.
NO.	BY:	DATE:	NO.	BY:	DATE:	S-30
1			3			TOTAL SHEETS
2			4			39

DWN. BY: WDC DATE: 02/24
CHKD. BY: GFW DATE: 02/24
DES. EGR. OF RECORD: STC DATE: 02/24

wdcrutcher
DGN: pw:\\jmt-pw.bentley.com:jmt-pw-01\Documents\Projects\2016\6-0988-005\Design\Structures\PLANS\OCN\059_I-5898_SMU_E03_S30.dgn
TIME: 06:07 AM on Sunday, May 05, 2024

DocuSign Envelope ID: CFF976E0-6897-4697-83E4-E7CC4C08C579

NOTES

STIRRUPS IN CAP MAY BE SHIFTED AS NECESSARY TO CLEAR ANCHOR BOLTS.

HOOKS ON "V" BARS MAY BE TURNED AS NECESSARY FOR PLACING REINFORCING STEEL.

ALL STEEL IN THE DRILLED PIERS IS INCLUDED IN THE PAY ITEMS FOR "REINFORCING STEEL" AND "SPIRAL COLUMN REINFORCING STEEL".

THE CONTRACTOR'S ATTENTION IS CALL TO THE FACT THAT THE LONGITUDINAL REINFORCEMENT FOR THE DRILLED PIERS IS DETAILED WITH 3 FEET OF EXTRA LENGTH.

THE LOCATION OF THE CONSTRUCTION JOINT IN THE DRILLED PIERS IS BASED ON AN APPROXIMATE GROUND LINE ELEVATION. IF THE CONSTRUCTION JOINT IS ABOVE THE ACTUAL GROUND LINE ELEVATION, THE CONTRACTOR SHALL PLACE THE CONSTRUCTION JOINT 1 FT. BELOW THE GROUND LINE.

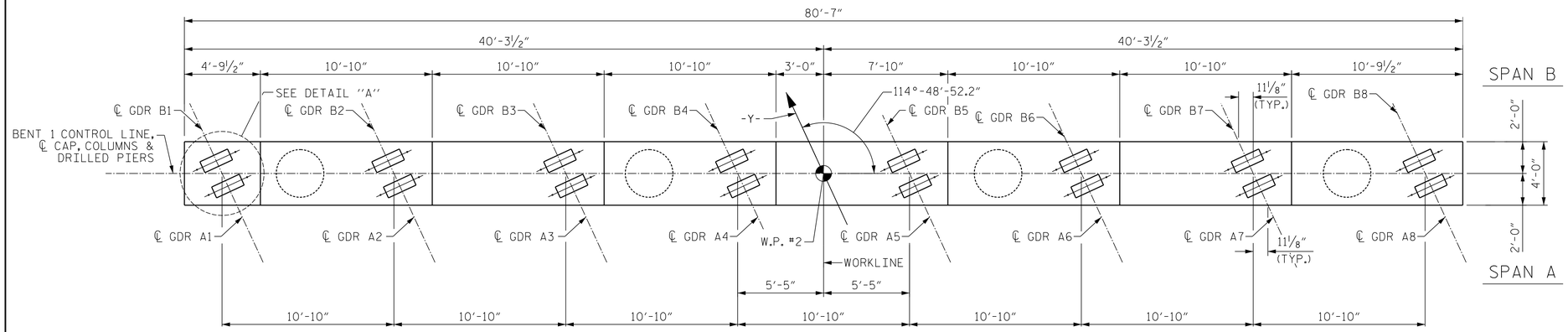

PLAN

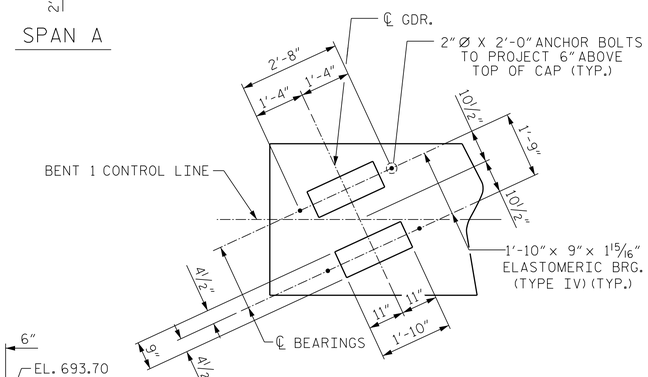

DETAIL "A"

DIMENSIONS ARE TYPICAL

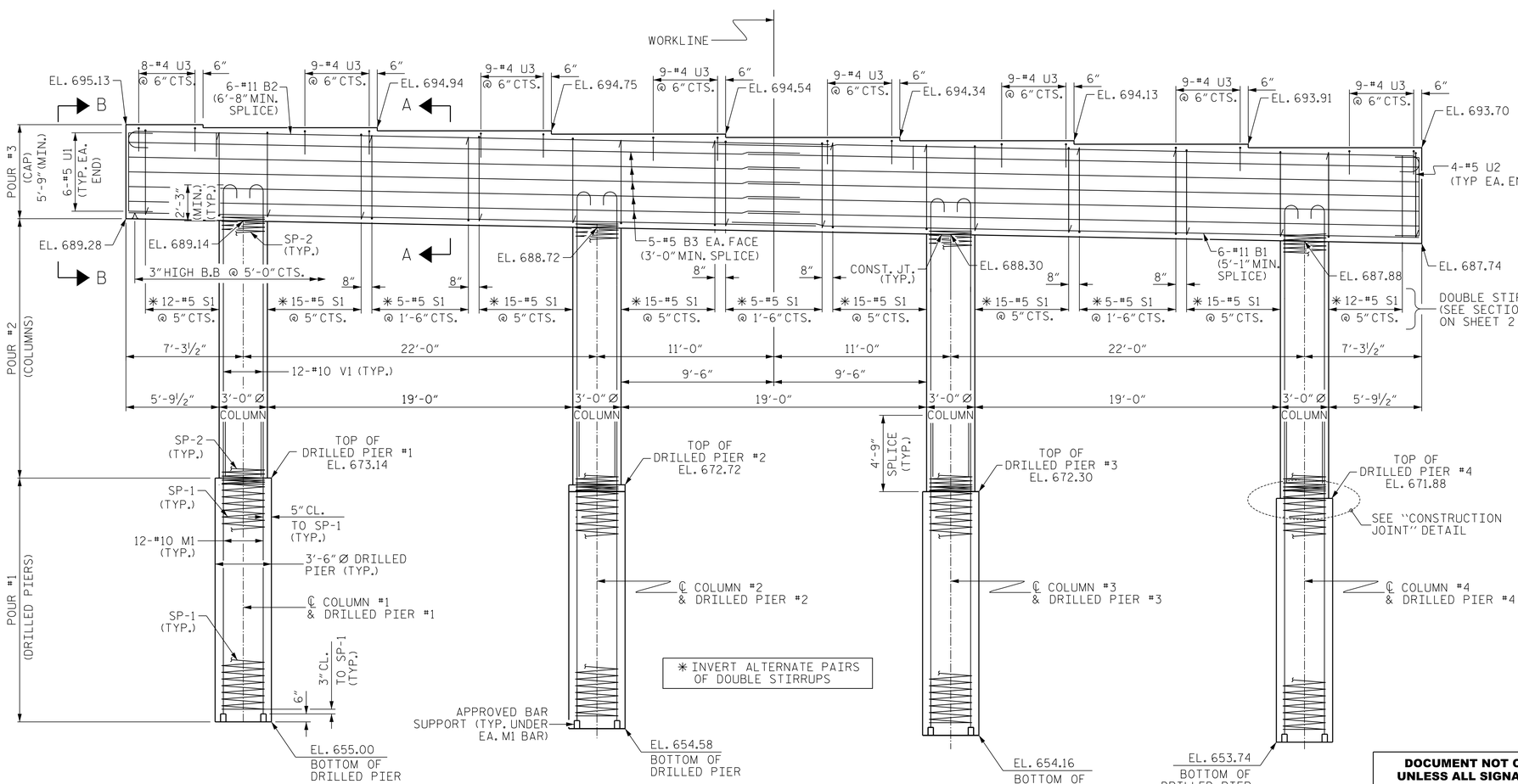

ELEVATION

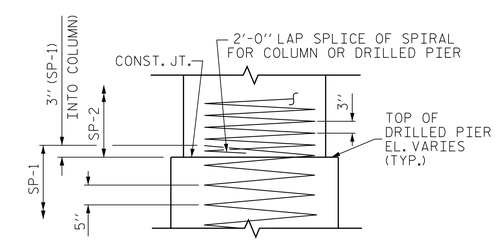

CONSTRUCTION JOINT DETAIL

PROJECT NO. I-5898

ROCKINGHAM COUNTY

STATION: 119+69.55 -Y-

SHEET 1 OF 2

DocuSigned by: Stephen T. Champion

NORTH CAROLINA PROFESSIONAL SEAL 020123 ENGINEER STEPHEN T. CHAMPION 05/07/2024

STATE OF NORTH CAROLINA
DEPARTMENT OF TRANSPORTATION
RALEIGH

SUBSTRUCTURE

BENT 1

DWN. BY: WDC	DATE: 02/24
CHKD. BY: GFW	DATE: 02/24
DES. EGR. OF RECORD: STC	DATE: 02/24

DOCUMENT NOT CONSIDERED FINAL UNLESS ALL SIGNATURES COMPLETED

Johnson, Mirmiran, & Thompson Inc.
4700 Falls of Neuse Rd, Suite 100,
Raleigh, NC, 27609
License No: C-3097

REVISIONS								SHEET NO.
NO.	BY:	DATE:	NO.	BY:	DATE:			S-31
1			3					TOTAL SHEETS
2			4					39

w:\Structure
DGN: pw:\\jmt-pw.bentley.com:jmt-pw-01\Documents\Projects\2016\6-0988-005\Design\Structures\PLANS\GW06_I_5898_SMU_B01_S31.dgn
TIME: 06:18 AM on Sunday, May 05, 2024

Docusign Envelope ID: 9B85712E-1E0F-40F5-88A6-093A89BC0514

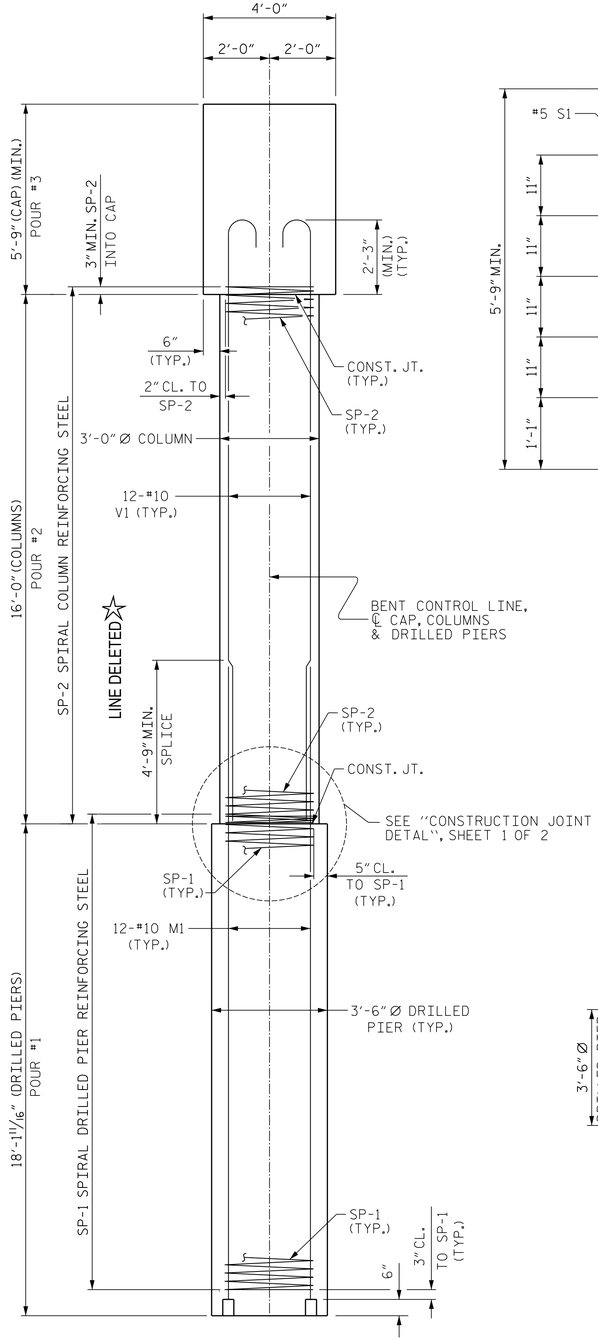

END ELEVATION

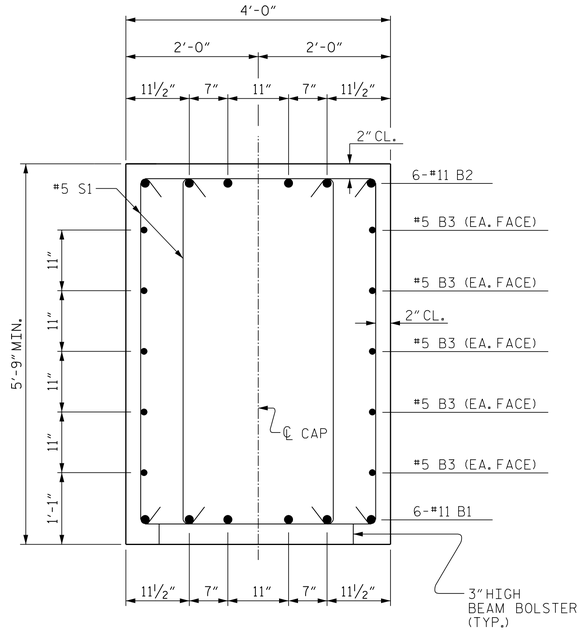

SECTION A-A

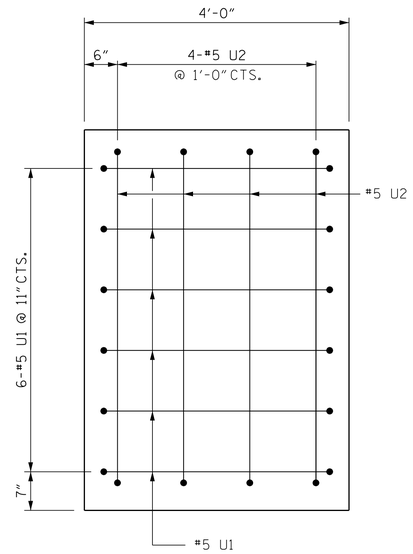

VIEW B-B

(TYP. EA. END)

BAR TYPES

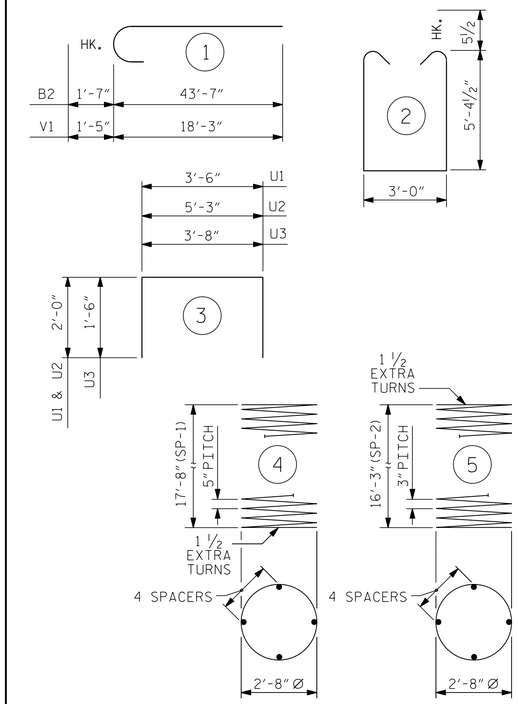

ALL BAR DIMENSIONS ARE OUT TO OUT.

✱ THE SP-1 SPIRAL REINFORCING STEEL SHALL BE W31 OR D-31 COLD DRAWN WIRE OR #5 PLAIN OR DEFORMED BAR.

✱✱ THE SP-2 SPIRAL REINFORCING STEEL SHALL BE W20 OR D-20 COLD DRAWN WIRE OR #4 PLAIN OR DEFORMED BAR.

BILL OF MATERIAL

BENT 1

BAR	NO.	SIZE	TYPE	LENGTH	WEIGHT
B1	12	#11	STR	42'-9"	2726
B2	12	#11	1	45'-2"	2880
B3	20	#5	STR	41'-9"	871
M1	48	#10	STR	25'-5"	5250
S1	258	#5	2	14'-8"	3947
U1	12	#5	3	7'-6"	94
U2	8	#5	3	9'-3"	77
U3	71	#4	3	6'-8"	316
V1	48	#10	1	19'-8"	4062
REINFORCING STEEL					20,223 LBS.
SP-1	4	✱	4	361'-1"	1506
SP-2	4	✱✱	5	548'-8"	1466
SPIRAL REINFORCING STEEL					2972 LBS.
CLASS "A" CONCRETE BREAKDOWN					
POUR #2 COLUMNS					16.8 C.Y.
POUR #3 CAP					70.1 C.Y.
TOTAL CLASS "A" CONCRETE					86.9 C.Y.
DRILLED PIER CONCRETE					
POUR #1 (DRILLED PIERS)					25.9 C.Y.

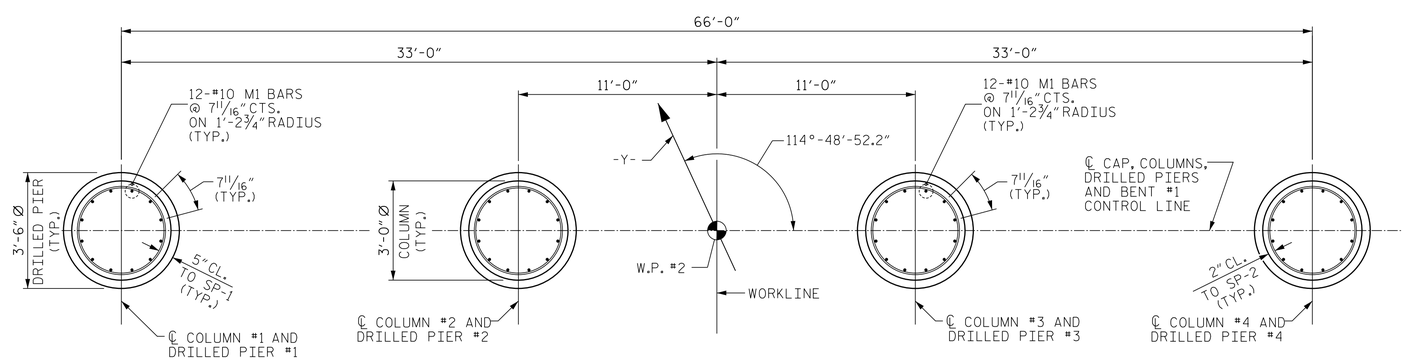

PLAN OF COLUMNS AND DRILLED PIERS

(DIM. & REINFORCING STEEL ARE TYPICAL FOR EACH COLUMN AND DRILLED PIER)

DocuSigned by: Gary F. Wilson — 10/20/2025

NORTH CAROLINA PROFESSIONAL SEAL 5282 ENGINEER GARY F. WILSON

SEAL AND SIGNATURE APPLY ONLY TO THOSE ELEMENTS IDENTIFIED WITH A STAR (✱) SYMBOL. NO RESPONSIBILITY IS ASSUMED FOR OTHER ITEMS SHOWN.

DocuSigned by: Stephen T. Champion — 10/20/2025

NORTH CAROLINA PROFESSIONAL SEAL 020123 ENGINEER STEPHEN T. CHAMPION

PROJECT NO. I-5898

ROCKINGHAM COUNTY

STATION: 119+69.55 -Y-

SHEET 2 OF 2

STATE OF NORTH CAROLINA
DEPARTMENT OF TRANSPORTATION
RALEIGH

SUBSTRUCTURE

BENT 1

DWN. BY: WDC	DATE: 02/24
CHKD. BY: GFW	DATE: 02/24
DES. EGR. OF RECORD: STC	DATE: 02/24

DOCUMENT NOT CONSIDERED FINAL UNLESS ALL SIGNATURES COMPLETED

Johnson, Mirmiran, & Thompson Inc.
4700 Falls of Neuse Rd, Suite 100,
Raleigh, NC, 27609
License No: C-3097

REVISIONS

NO.	BY:	DATE:	NO.	BY:	DATE:
1			3		
2			4		

SHEET NO. S-32

TOTAL SHEETS 39

w/cruchter
DGN: pw:\\mt-pw.bentley.com:mt-pw-01\Documents\Projects\2016\16-0988-005\Design\Structures\PLANS\001\063_I-5898_SMU_B02_S32.dgn
TIME: 06:18 AM on Sunday, May 05, 2024

Docusign Envelope ID: 9B85712E-1E0F-40F5-88A6-093A89BC0514

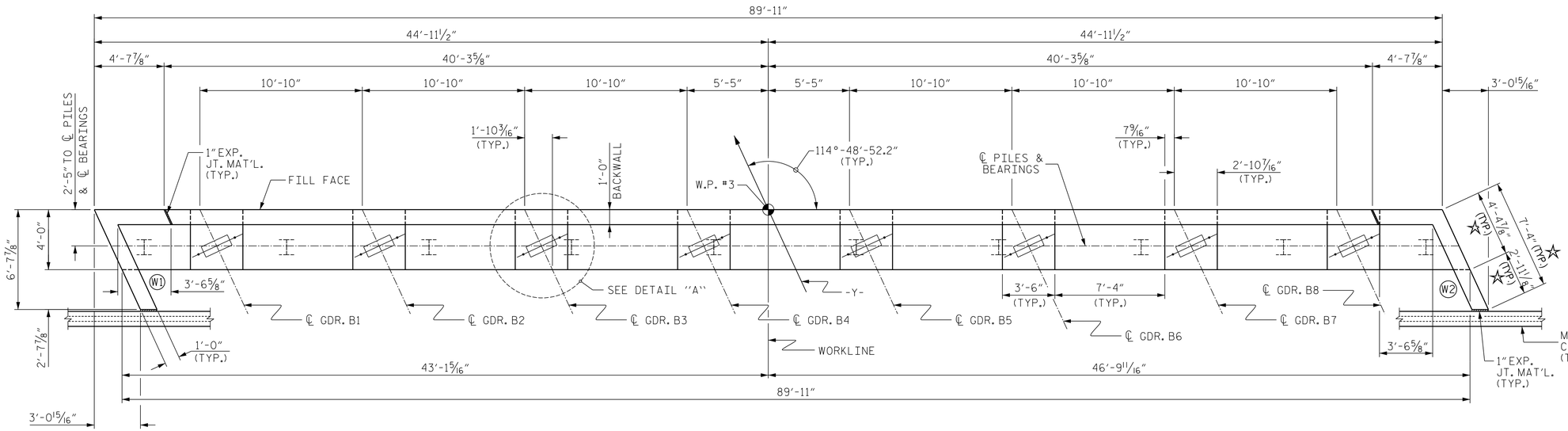

PLAN

WINGS ARE TYPICAL

NOTES

BACKWALL SHALL BE PLACED BEFORE APPLYING THE EPOXY PROTECTIVE COATING.

STIRRUPS AND "U" BARS IN CAP MAY BE SHIFTED AS NECESSARY TO ANCHOR BOLTS.

THE #5 V1 BARS SHALL BE PLACED 2" CLEAR FROM THE TOP OF THE BACKWALL.

THE TOP SURFACE AREAS OF THE END BENT CAP SHALL BE CURED IN ACCORDANCE WITH THE STANDARD SPECIFICATIONS EXCEPT THE MEMBRANE CURING COMPOUND METHOD SHALL NOT BE USED.

THE TOP SURFACE OF THE CAP EXCEPT THE BRIDGE SEAT BUILDUPS SHALL BE SLOPED TRANSVERSELY FROM THE FILL FACE TO THE BACK FACE AT THE RATE OF 2%.

FOR PILE SPLICE DETAILS, SEE SHEET 3 OF 3.

FOR WING DETAILS, SEE SHEET 2 OF 3.

✳ FOR LOCATION OF ELEVATIONS BETWEEN BRIDGE SEAT BUILD-UPS, SEE SECTION A-A ON SHEET 3 OF 3.

☆ STEEL H-PILE POINTS ARE REQUIRED FOR STEEL H-PILES AT END BENTS 1 & 2. SEE SECTION 450 OF THE STANDARD SPECIFICATIONS.

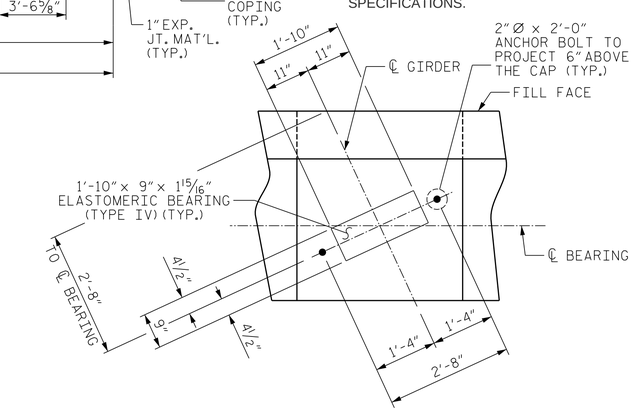

DETAIL "A"

DIMENSIONS ARE TYPICAL

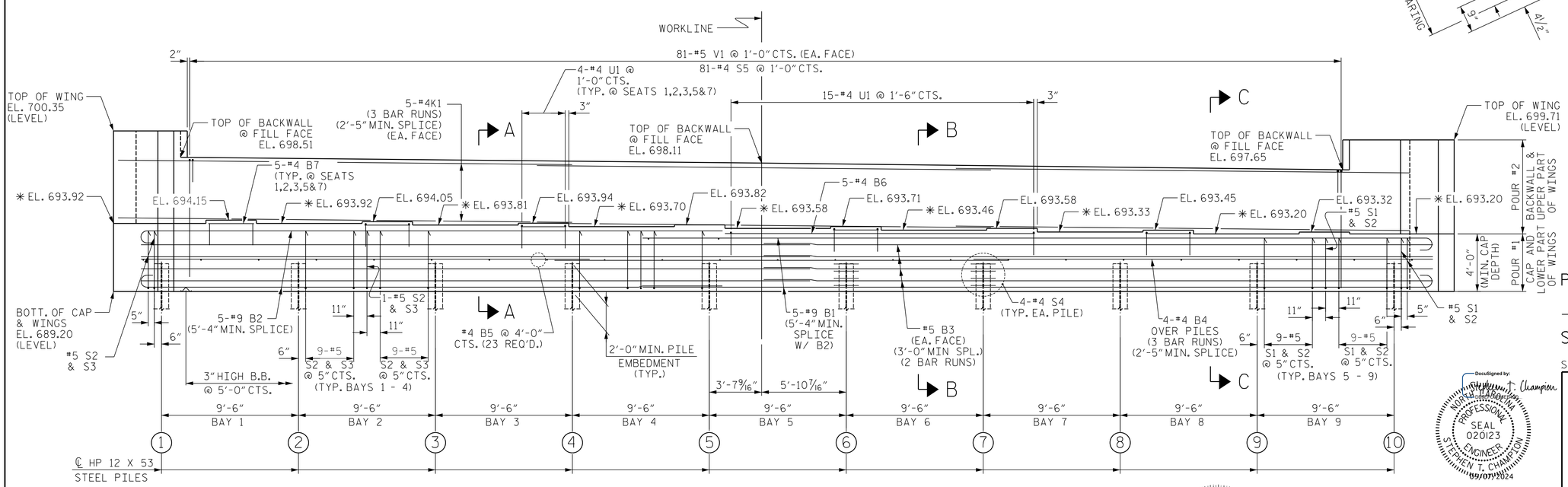

ELEVATION

PROJECT NO. I-5898

ROCKINGHAM COUNTY

STATION: 119+69.55 -Y-

SHEET 1 OF 3

STATE OF NORTH CAROLINA
DEPARTMENT OF TRANSPORTATION
RALEIGH

SUBSTRUCTURE

END BENT 2

SEAL AND SIGNATURE APPLY ONLY TO THOSE ELEMENTS IDENTIFIED WITH A STAR (✳) SYMBOL. NO RESPONSIBILITY IS ASSUMED FOR OTHER ITEMS SHOWN.

NORTH CAROLINA PROFESSIONAL SEAL 042282 ENGINEER MIDDLETON E. WILSON 10/20/2025

DocuSigned by: Stephen T. Champion 09/07/2024

NORTH CAROLINA PROFESSIONAL SEAL 020123 ENGINEER STEPHEN T. CHAMPION

DOCUMENT NOT CONSIDERED FINAL UNLESS ALL SIGNATURES COMPLETED

Johnson, Mirmiran, & Thompson Inc.
4700 Falls of Neuse Rd, Suite 100,
Raleigh, NC, 27609
License No: C-3097

DWN. BY: WDC	DATE: 02/24		
CHKD. BY: GFW	DATE: 02/24		
DES. EGR. OF RECORD: STC	DATE: 02/24		

REVISIONS								SHEET NO.
NO.	BY:	DATE:	NO.	BY:	DATE:			S-33
1			3					TOTAL SHEETS
2			4					39

wdcrutcher
DGN: \\jmt-pw-bentley.com\jmt-pw-0\Documents\Projects\20\6V6-0988-005\Design\Structures\PLANS\DGN\065_I-5898_SMU_E201_S33.dgn
TIME: 06:18 AM on Sunday, May 05, 2024

DocuSign Envelope ID: CFF976E0-6897-4697-83E4-E7CC4C08C579

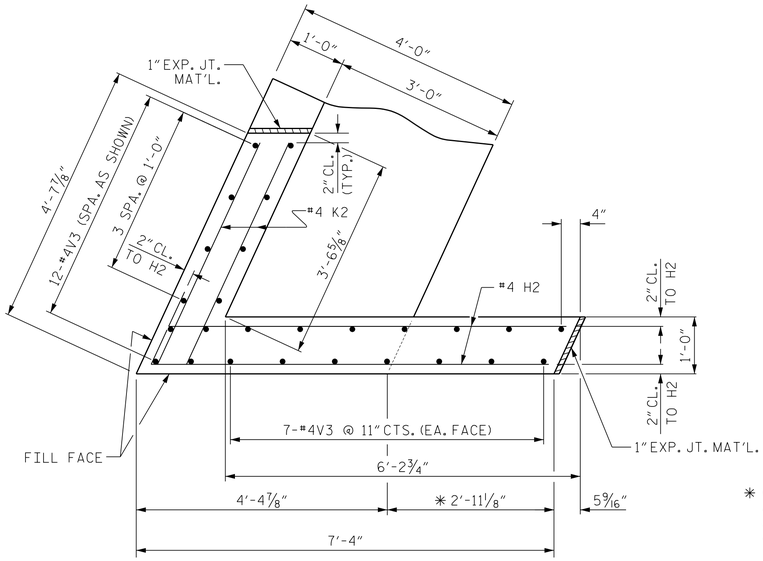

PLAN OF WING (W1)

* WINGWALL EXTENSION DISTANCE TO BE FIELD ADJUSTED AS REQUIRED TO PROVIDE 1" EXPANSION JOINT MATERIAL BETWEEN THE MSE WALL COPING AND THE EXTENDED WINGWALL.

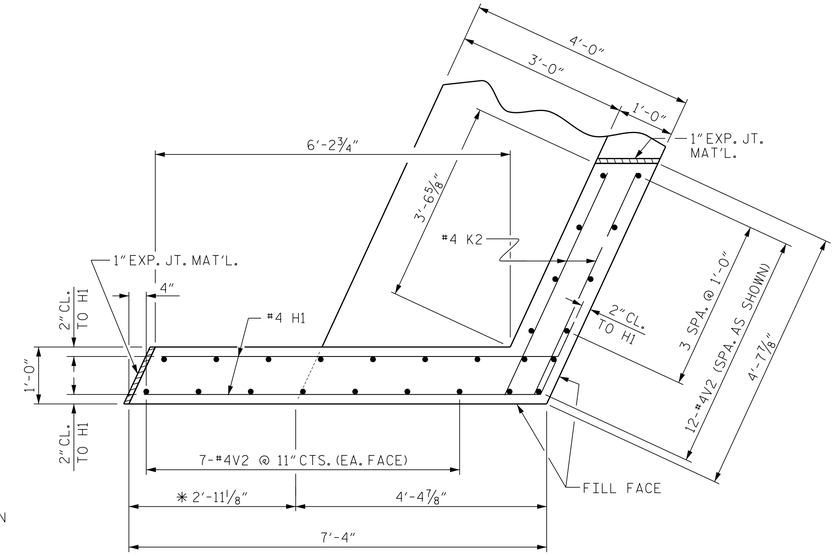

PLAN OF WING (W2)

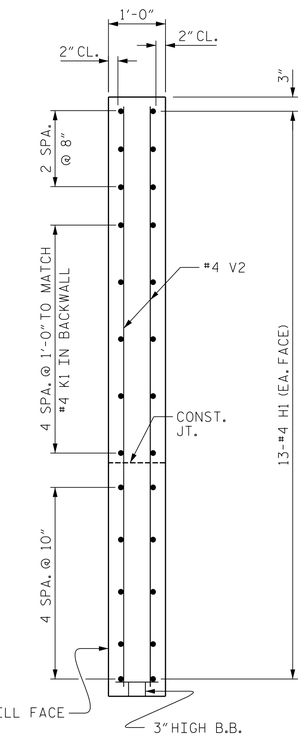

SECTION Y-Y

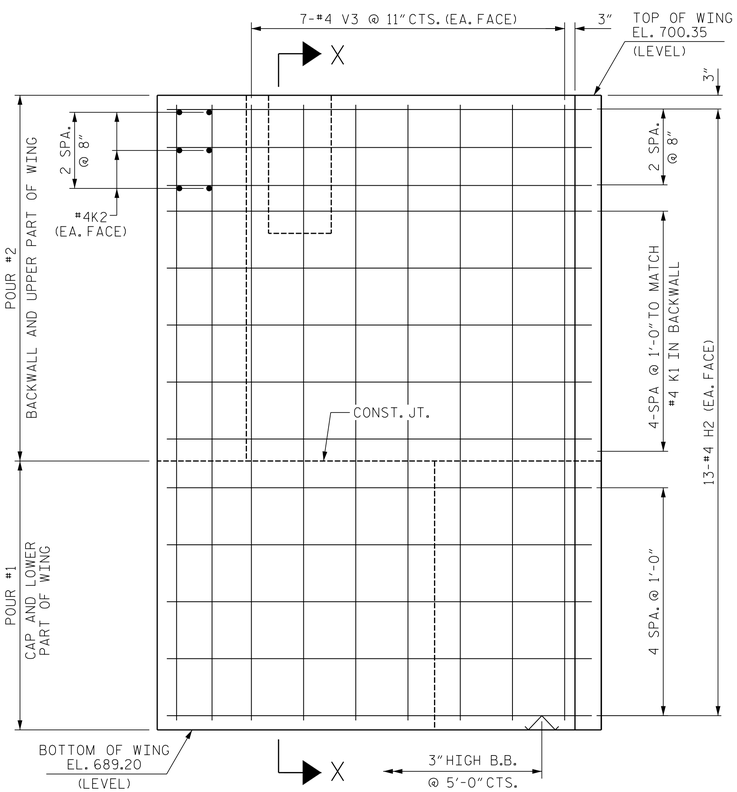

ELEVATION OF WING (W1)

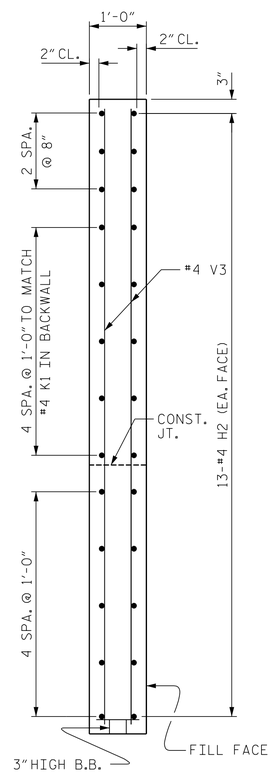

SECTION X-X

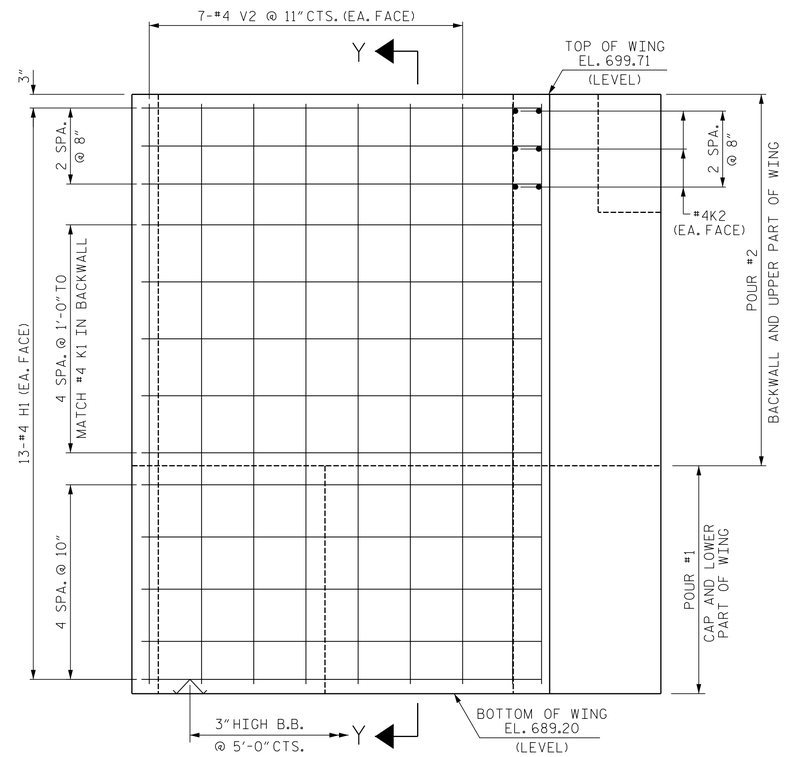

ELEVATION OF WING (W2)

DocuSigned by: Stephen T. Champion
NORTH CAROLINA PROFESSIONAL SEAL 020123 ENGINEER STEPHEN T. CHAMPION
05/07/2024

PROJECT NO. I-5898
ROCKINGHAM COUNTY
STATION: 119+69.55 -Y-

SHEET 2 OF 3

STATE OF NORTH CAROLINA
DEPARTMENT OF TRANSPORTATION
RALEIGH

SUBSTRUCTURE

END BENT 2

DOCUMENT NOT CONSIDERED FINAL UNLESS ALL SIGNATURES COMPLETED

Johnson, Mirmiran, & Thompson Inc.
4700 Falls of Neuse Rd, Suite 100,
Raleigh, NC, 27609
License No: C-3097

REVISIONS								SHEET NO.
NO.	BY:	DATE:	NO.	BY:	DATE:			S-34
1			3					TOTAL SHEETS
2			4					39

DWN. BY: WDC	DATE: 02/24
CHKD. BY: GFW	DATE: 02/24
DES. EGR. OF RECORD: STC	DATE: 02/24

wdcrutcher
DGN: Dwn:\\jmt-pw-01\Documents\Projects\2016\16-0988-005\Design\Structures\PLANS\GDN067_I-5898_SMU_E202_S34.dgn
TIME: 06:18 AM on Sunday, May 05, 2024

DocuSign Envelope ID: CFF976E0-6897-4697-83E4-E7CC4C08C579

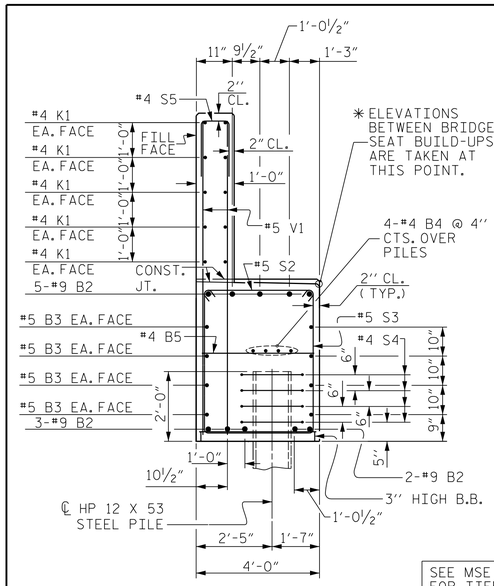

SEE MSE WALL PLANS FOR TIEBACK STRAP DETAILS

SECTION A-A

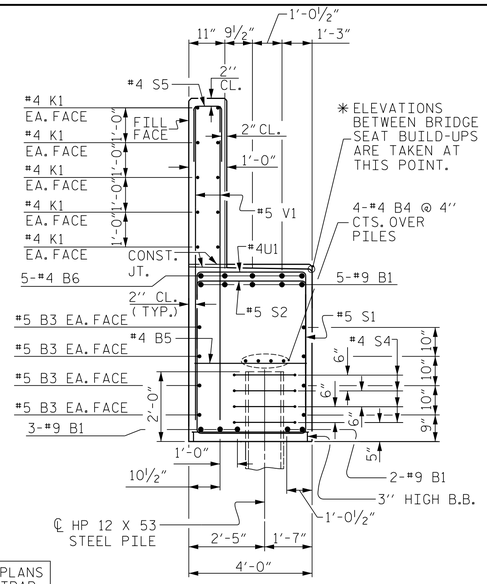

SECTION B-B

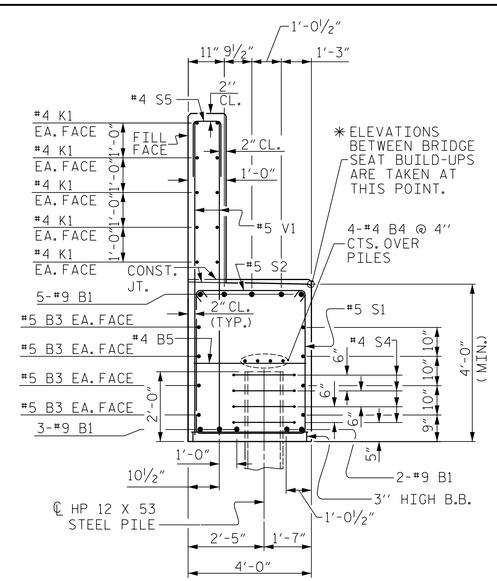

SECTION C-C

BAR TYPES

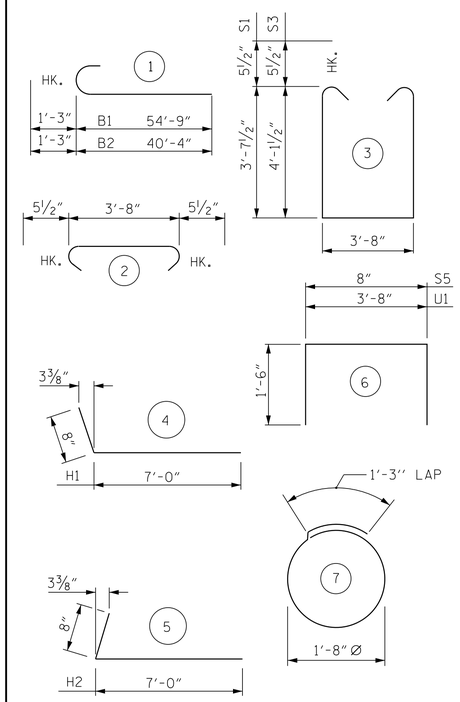

ALL BAR DIMENSIONS ARE OUT TO OUT.

BILL OF MATERIAL
END BENT 2

BAR	NO.	SIZE	TYPE	LENGTH	WEIGHT
B1	10	#9	1	56'-0"	1904
B2	10	#9	1	41'-7"	1414
B3	16	#5	STR	46'-5"	775
B4	12	#4	STR	31'-6"	253
B5	25	#4	STR	3'-8"	61
B6	5	#4	STR	21'-6"	72
B7	25	#4	STR	3'-2"	53
H1	26	#4	4	7'-8"	133
H2	26	#4	5	7'-8"	133
K1	30	#4	STR	31'-6"	631
K2	12	#4	STR	4'-3"	34
S1	97	#5	3	11'-10"	1197
S2	175	#5	2	4'-7"	837
S3	78	#5	3	12'-10"	1044
S4	40	#4	7	6'-6"	174
S5	81	#4	6	3'-8"	198
U1	35	#4	6	6'-8"	156
V1	162	#5	STR	8'-1"	1366
V2	26	#4	STR	10'-1"	175
V3	26	#4	STR	10'-8"	185

REINFORCING STEEL 10,795 LBS.

CLASS A CONCRETE BREAKDOWN
POUR #1 CAP, LOWER WINGS 60.2 C.Y.
POUR #2 BACKWALL & UPPER WINGS 18.4 C.Y.
TOTAL 78.6 C.Y.

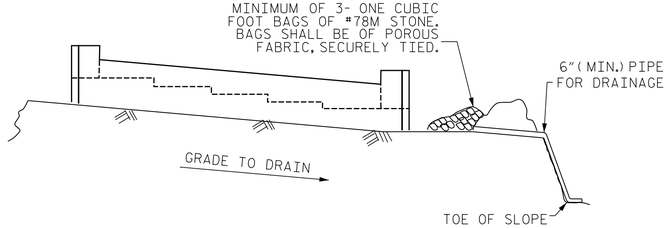

BAGGED STONE AND PIPE SHALL BE PLACED IMMEDIATELY AFTER COMPLETION OF END BENT EXCAVATION. PIPE MAY BE EITHER CONCRETE, CORRUGATED STEEL, CORRUGATED ALUMINUM ALLOY, OR CORRUGATED PLASTIC. PERFORATED PIPE WILL NOT BE ALLOWED.

BAGGED STONE SHALL REMAIN IN PLACE UNTIL THE ENGINEER DIRECTS THAT IT BE REMOVED. THE CONTRACTOR SHALL REMOVE AND DISPOSE OF SILT ACCUMULATIONS AT BAGGED STONE WHEN SO DIRECTED BY THE ENGINEER. BAGS SHALL BE REMOVED AND REPLACED WHENEVER THE ENGINEER DETERMINES THAT THEY HAVE DETERIORATED AND LOST THEIR EFFECTIVENESS.

NO SEPARATE PAYMENT WILL BE MADE FOR THIS WORK AND THE ENTIRE COST OF THIS WORK SHALL BE INCLUDED IN THE UNIT CONTRACT PRICE BID FOR THE SEVERAL PAY ITEMS.

TEMPORARY DRAINAGE AT END BENT

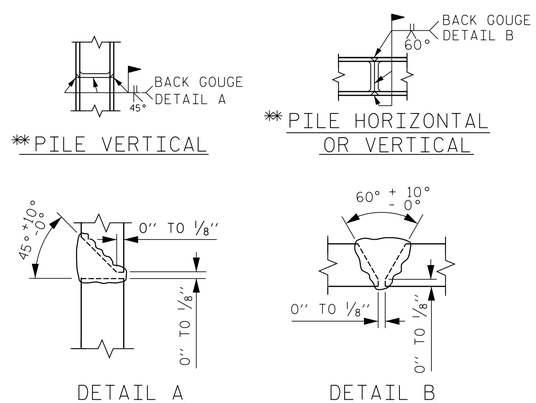

PILE SPLICE DETAILS

✱✱ POSITION OF PILE DURING WELDING.

PROJECT NO. I-5898
ROCKINGHAM COUNTY
STATION: 119+69.55 -Y-

SHEET 3 OF 3

DocuSigned by: Stephen T. Champion
NORTH CAROLINA PROFESSIONAL SEAL 020123 ENGINEER STEPHEN T. CHAMPION
5/9/2024

STATE OF NORTH CAROLINA
DEPARTMENT OF TRANSPORTATION
RALEIGH

SUBSTRUCTURE

END BENT 2

DOCUMENT NOT CONSIDERED FINAL UNLESS ALL SIGNATURES COMPLETED

Johnson, Mirmiran, & Thompson Inc.
4700 Falls of Neuse Rd, Suite 100,
Raleigh, NC, 27609
License No: C-3097

REVISIONS						SHEET NO.
NO.	BY:	DATE:	NO.	BY:	DATE:	S-35
1			3			TOTAL SHEETS
2			4			39

DWN. BY: WDC	DATE: 02/24
CHKD. BY: GFW	DATE: 02/24
DES. EGR. OF RECORD: STC	DATE: 02/24

wdcrutcher
DGN: pw:\\jmt-pw.bentley.com:jmt-pw-01\Documents\Projects\2016\6-0988-005\Design\Structures\PLANS\OCN\069_I-5898_SMU_E203_S35.dgn
TIME: 06:58 AM on Sunday, May 05, 2024

DocuSign Envelope ID: CFF976E0-6897-4697-83E4-E7CC4C08C579

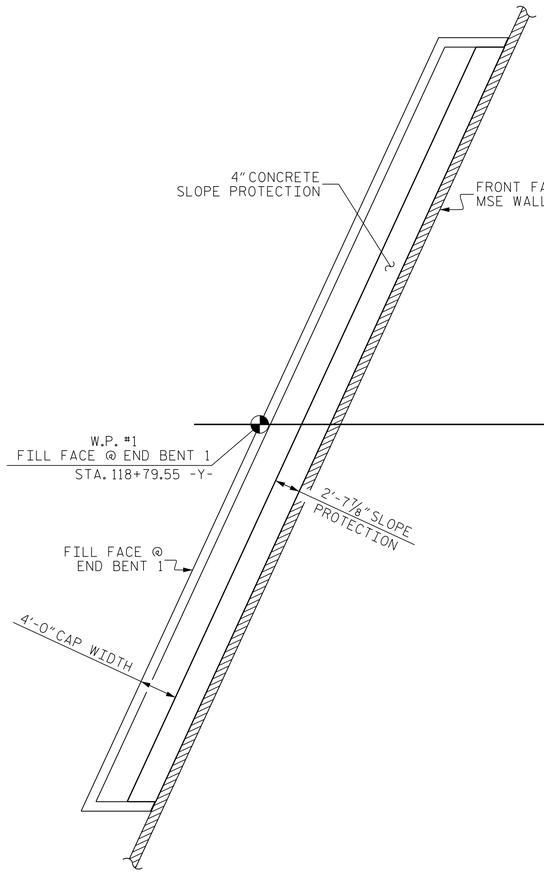

PLAN @ END BENT 1

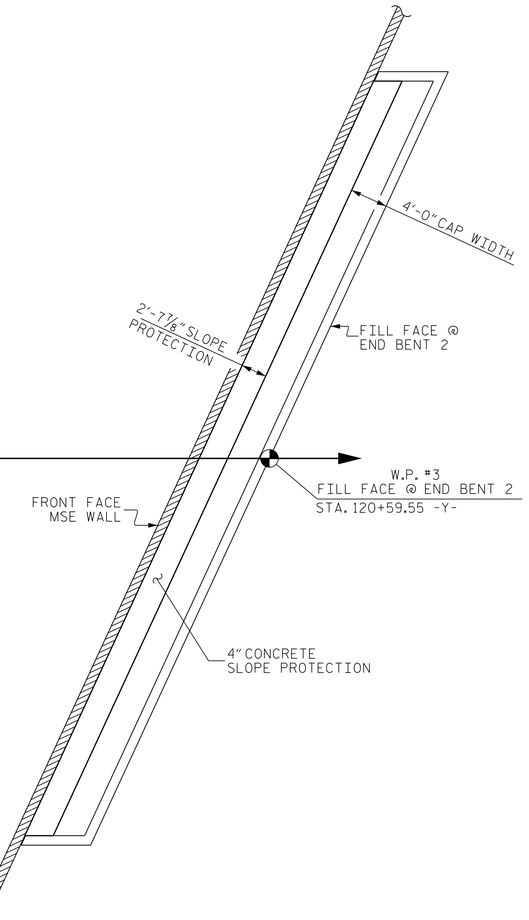

PLAN @ END BENT 2

GENERAL NOTES

SLOPE PROTECTION SHALL BE PLACED UNDER THE ENDS OF THE BRIDGE AS SHOWN IN THE DETAILS. STRAIGHT EDGING WILL NOT BE REQUIRED UNLESS, IN THE OPINION OF THE ENGINEER, VISUAL INSPECTION INDICATES A NEED FOR IT. MEASUREMENT AND PAYMENT SHALL BE AS PRESCRIBED IN SECTION 462 OF THE STANDARD SPECIFICATIONS.

SLOPE PROTECTION SHALL CONSIST OF 4" POURED-IN-PLACE CONCRETE PAVING AS SHOWN IN THE DETAILS ON THIS SHEET. CONCRETE SHALL BE CLASS "B". THE CONCRETE SURFACE SHALL BE FLOATED WITH A WOODEN FLOAT AND FINISHED. WELDED WIRE FABRIC REINFORCING SHALL BE 6 X 6 - W1.4 X W1.4, 60" WIDE. SLOPE PROTECTION SHALL BE POURED IN 5' STRIPS AS SHOWN IN THE "POURING DETAIL" WITH 2'-0" LONG #4 BARS PLACED ALONG THE SLOPE BETWEEN STRIPS AT 1'-6" MAXIMUM SPACING. SLOPE PROTECTION MAY BE POURED IN ALTERNATE 4' AND 5' STRIPS AS SHOWN IN THE "OPTIONAL POURING DETAIL" WITH ADJACENT RUNS OF WELDED WIRE FABRIC LAPPING AT LEAST 6". THE COST OF THE WELDED WIRE FABRIC AND #4 BARS, IF USED, SHALL BE INCLUDED IN THE CONTRACT UNIT PRICE BID PER SQUARE YARD FOR SLOPE PROTECTION.

BRIDGE @ STA. 119+69.55 -Y-	4-INCH SLOPE PROTECTION	* WELDED WIRE FABRIC 60 INCHES WIDE
	SQUARE YARDS	APPROX. L.F.
END BENT 1	27	60
END BENT 2	27	60

* QUANTITY SHOWN IS BASED ON 5' POURS.

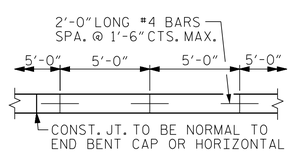

POURING DETAIL

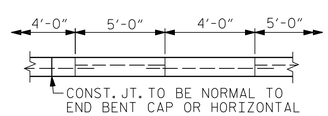

OPTIONAL POURING DETAIL

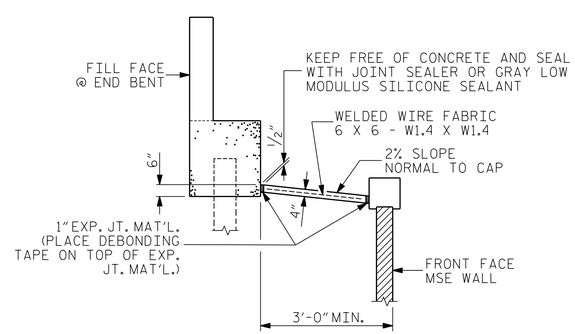

SECTION @ END BENT

(END BENT 1 SHOWN,
END BENT 2 SIMILAR)

PROJECT NO. I-5898
ROCKINGHAM COUNTY
STATION: 119+69.55 -Y-

DocuSigned by: Stephen T. Champion
NORTH CAROLINA PROFESSIONAL SEAL 020123 ENGINEER STEPHEN T. CHAMPION
05/07/2024

STATE OF NORTH CAROLINA
DEPARTMENT OF TRANSPORTATION
RALEIGH

SLOPE PROTECTION DETAILS

DOCUMENT NOT CONSIDERED FINAL
UNLESS ALL SIGNATURES COMPLETED

Johnson, Mirmiran, & Thompson Inc.
4700 Falls of Neuse Rd, Suite 100,
Raleigh, NC, 27609
License No: C-3097

REVISIONS							SHEET NO.
NO.	BY:	DATE:	NO.	BY:	DATE:		S-36
1			3				TOTAL SHEETS
2			4				39

DWN. BY: WDC	DATE: 02/24
CHKD. BY: GFW	DATE: 02/24
DES. EGR. OF RECORD: STC	DATE: 02/24

wdcrutcher
DGN: pw:\\jmt-pw.bentley.com:jmt-pw-01\Documents\Projects\2016\6-0988-005\Design\Structures\PLANS\DGN\07I_I-5898_SMU_SP01_S36.dgn
TIME: 06:18 AM on Sunday, May 05, 2024

DocuSign Envelope ID: CFF976E0-6897-4697-83E4-E7CC4C08C579

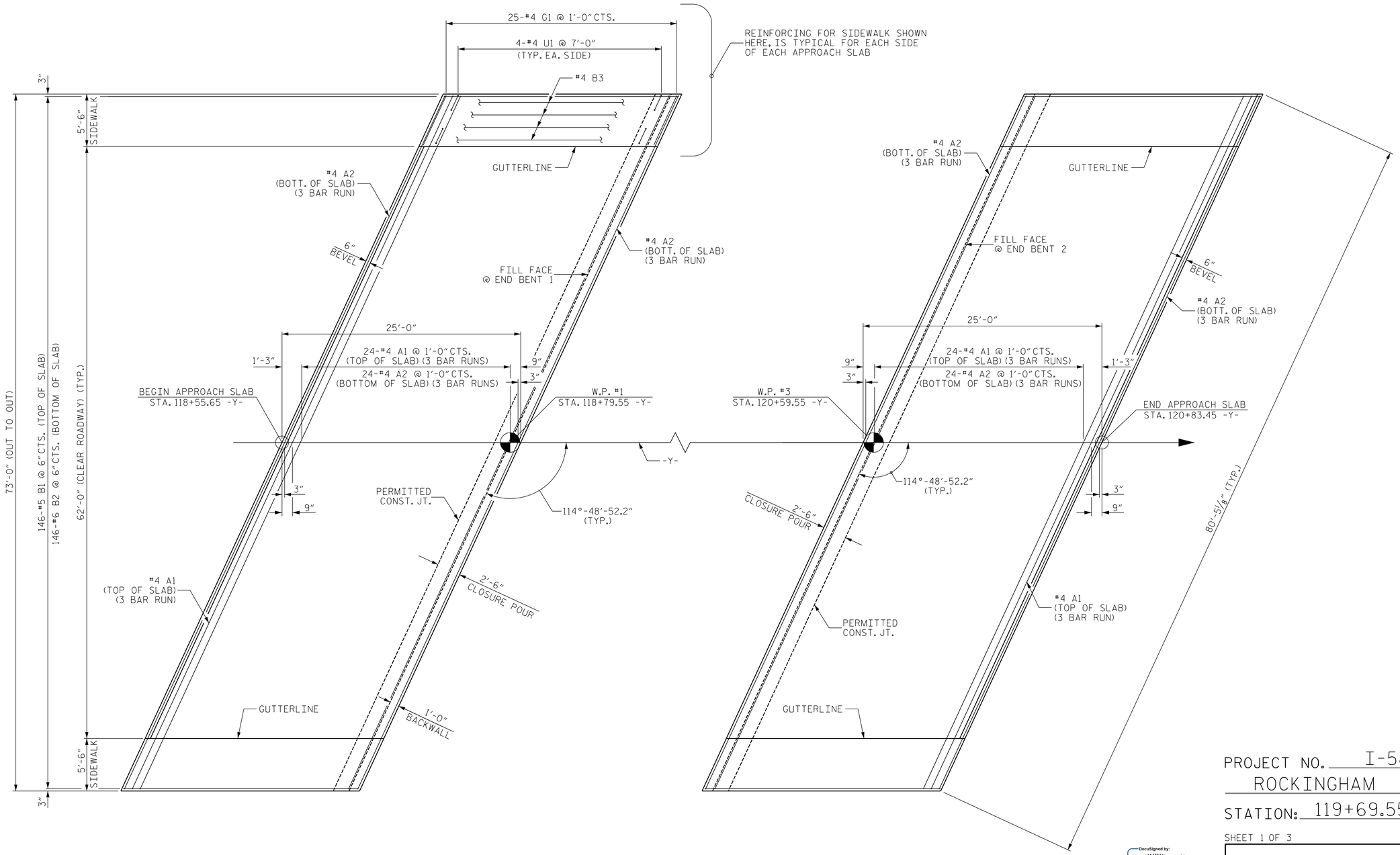

PLAN @ END BENT 1

PLAN @ END BENT 2

PLAN OF APPROACH SLABS

DIMENSIONS AND REINFORCING STEEL SHOWN ARE TYPICAL FOR BOTH APPROACH SLABS.

PROJECT NO. I-5898
ROCKINGHAM COUNTY
STATION: 119+69.55 -Y-

SHEET 1 OF 3

STATE OF NORTH CAROLINA
DEPARTMENT OF TRANSPORTATION
RALEIGH

BRIDGE APPROACH SLAB FOR FLEXIBLE PAVEMENT

DocuSigned by: Stephen T. Champion
NORTH CAROLINA PROFESSIONAL SEAL 020123 ENGINEER STEPHEN T. CHAMPION
5/30/2024

DOCUMENT NOT CONSIDERED FINAL UNLESS ALL SIGNATURES COMPLETED

Johnson, Mirmiran, & Thompson Inc.
4700 Falls of Neuse Rd, Suite 100,
Raleigh, NC, 27609
License No: C-3097

REVISIONS								SHEET NO.
NO.	BY:	DATE:	NO.	BY:	DATE:			S-37
1			3					TOTAL SHEETS
2			4					39

DWN. BY: WDC	DATE: 02/24
CHKD. BY: GFW	DATE: 02/24
DES. EGR. OF RECORD: STC	DATE: 02/24

wdcrutcher
DGN: pw:\\mt-pw.bentley.com:mt-pw-01\Documents\Projects\2016\6-0988-005\Design\Structures\PLANS\GENV073_I-5898_SMU_AS01_S37.dgn
TIME: 06:18 AM on Sunday, May 05, 2024

Docusign Envelope ID: 9B85712E-1E0F-40F5-88A6-093A89BC0514

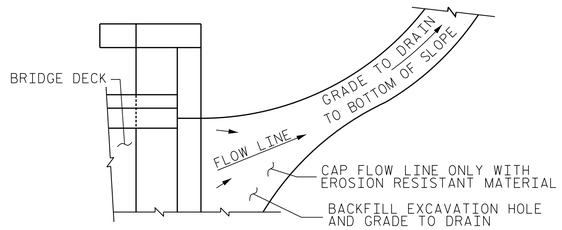

NOTE: IF THE APPROACH SLAB IS NOT CONSTRUCTED IMMEDIATELY AFTER THE BACKFILLING OF THE END BENT EXCAVATION, GRADE TO DRAIN TO THE BOTTOM OF THE SLOPE AND PROVIDE EROSION RESISTANT MATERIAL, SUCH AS FIBERGLASS ROVING OR AS DIRECTED BY THE ENGINEER TO PREVENT SOIL EROSION AND TO PROTECT THE AREA ADJACENT TO THE STRUCTURE. THE CONTRACTOR WILL BE REQUIRED TO REMOVE THESE MATERIALS PRIOR TO CONSTRUCTION OF THE APPROACH SLAB.

TEMPORARY DRAINAGE DETAIL

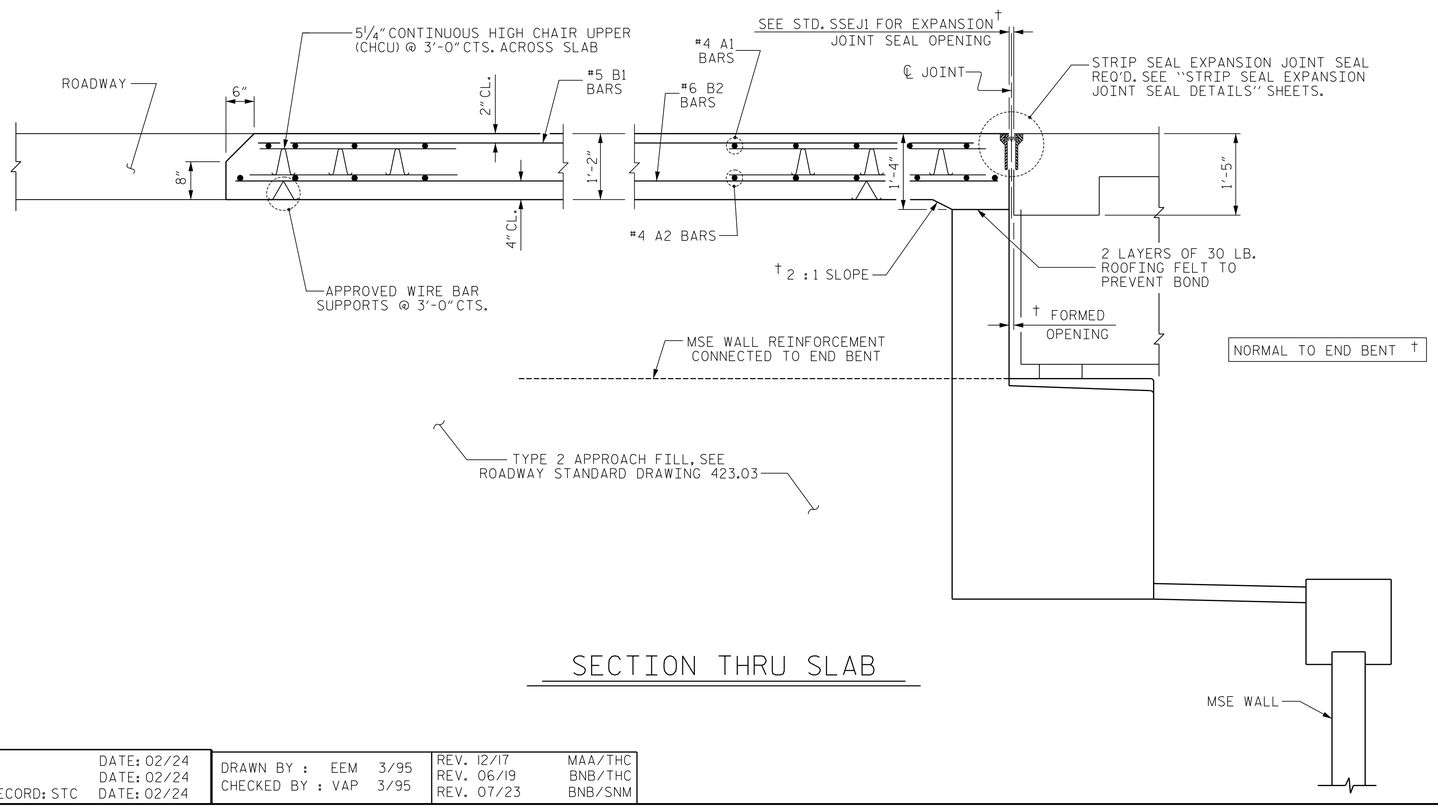

SECTION THRU SLAB

NOTES

FOR BRIDGE APPROACH FILL, SEE ROADWAY PLANS.

APPROACH SLAB SHALL NOT BE CONSTRUCTED PRIOR TO COMPLETION OF THE BRIDGE DECK.

AREA BETWEEN THE WINGWALL AND APPROACH SLAB SHALL BE GRADED TO DRAIN THE WATER AWAY FROM THE FILL FACE OF THE BRIDGE AND SHALL BE PAVED. SEE ROADWAY PLANS.

FOR STRIP SEAL EXPANSION JOINTS, SEE SPECIAL PROVISIONS.

☆ NO SEPARATE MEASUREMENT OR PAYMENT WILL BE MADE FOR MATERIALS OR LABOR REQUIRED TO CONSTRUCT THE SIDEWALK. THE ENTIRE COST OF THIS WORK SHALL BE INCLUDED IN THE LUMP SUM PRICE BID FOR BRIDGE APPROACH SLABS.

BILL OF MATERIAL

FOR ONE APPROACH SLAB (2 REQ'D.)

BAR	NO.	SIZE	TYPE	LENGTH	WEIGHT
✳ A1	75	#4	STR	28'-0"	1403
A2	78	#4	STR	27'-9"	1446
✳ B1	146	#5	STR	24'-0"	3655
B2	146	#6	STR	24'-8"	5409
✳ B3	8	#4	STR	24'-8"	132
✳ G1	50	#4	STR	5'-8"	189
✳ U1	16	#4	1	3'-0"	32

REINFORCING STEEL	LBS.	6855
✳ EPOXY COATED REINFORCING STEEL	LBS.	5411
CLASS AA CONCRETE		
APPROACH SLAB	C.Y.	79.1
SIDEWALKS	C.Y.	5.6
TOTAL	C.Y.	84.7

BAR TYPE

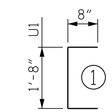

ALL BAR DIMENSIONS ARE OUT TO OUT

SPLICE LENGTHS

BAR SIZE	EPOXY COATED	UNCOATED
#4	1'-11"	1'-7"
#5	2'-5"	2'-0"
#6	3'-7"	2'-5"

PROJECT NO. I-5898

ROCKINGHAM COUNTY

STATION: 119+69.55 -Y-

SHEET 2 OF 3

STATE OF NORTH CAROLINA
DEPARTMENT OF TRANSPORTATION
RALEIGH

BRIDGE APPROACH SLAB FOR FLEXIBLE PAVEMENT

NORTH CAROLINA PROFESSIONAL SEAL 048282 ENGINEER GWEN L. WILSON
DocuSigned by: Gwen L. Wilson
10/20/2025

SEAL AND SIGNATURE APPLY ONLY TO THOSE ELEMENTS IDENTIFIED WITH A STAR (✳) SYMBOL. NO RESPONSIBILITY IS ASSUMED FOR OTHER ITEMS SHOWN.

NORTH CAROLINA PROFESSIONAL SEAL 020123 ENGINEER STEPHEN T. CHAMPION
DocuSigned by: Stephen T. Champion
05/07/2024

DOCUMENT NOT CONSIDERED FINAL UNLESS ALL SIGNATURES COMPLETED

Johnson, Mirmiran, & Thompson Inc.
4700 Falls of Neuse Rd, Suite 100,
Raleigh, NC, 27609
License No: C-3097

REVISIONS						SHEET NO.
NO.	BY:	DATE:	NO.	BY:	DATE:	S-38
1			3			TOTAL SHEETS
2			4			39

DWN. BY: WDC	DATE: 02/24	DRAWN BY : EEM	3/95	REV. 12/17	MAA/THC
CHKD. BY: GFW	DATE: 02/24	CHECKED BY : VAP	3/95	REV. 06/19	BNB/THC
DES. EGR. OF RECORD: STC	DATE: 02/24			REV. 07/23	BNB/SNM

STD. NO. BAS2

wdcrutcher
DGN: pw:\\jmt-pw.bentley.com:jmt-pw-01\Documents\Projects\2016\6-0988-005\Design\Structures\PLANS\DGN\075_I-5898_SMU_AS02_S38.dgn
TIME: 06:18 AM on Sunday, May 05, 2024

Docusign Envelope ID: 9B85712E-1E0F-40F5-88A6-093A89BC0514

NOTES

ALL REINFORCING STEEL IN THE SIDEWALK SHALL BE EPOXY COATED.

GROOVED CONTRACTION JOINTS, 1/2" IN DEPTH, SHALL BE TOOLED IN ALL EXPOSED FACES OF THE SIDEWALK (MEDIAN STRIP) IN ACCORDANCE WITH ARTICLE 825-10(B) OF THE STANDARD SPECIFICATIONS. THE CONTRACTION JOINTS SHALL BE LOCATED AT A SPACING OF 8 FEET TO 10 FEET BETWEEN EXPANSION JOINTS. NO CONTRACTION JOINTS WILL BE REQUIRED FOR SEGMENTS LESS THAN 10 FEET IN LENGTH.

U1 BARS MAY BE PUSHED INTO GREEN CONCRETE AFTER THE APPROACH SLAB HAS BEEN SCREEDED OFF.

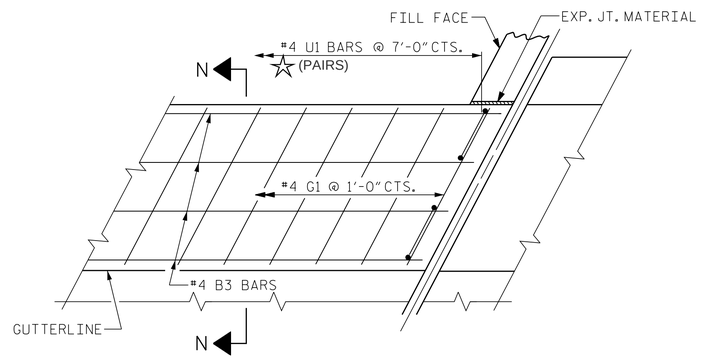

PLAN OF LEFT SIDE

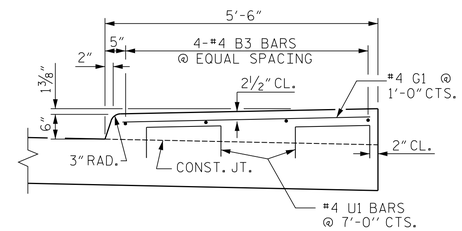

SECTION N-N

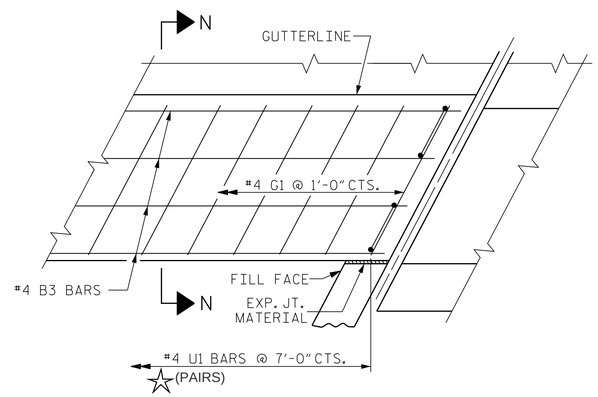

PLAN OF RIGHT SIDE

DETAILS OF SIDEWALK ON APPROACH SLAB

PROJECT NO. I-5898
ROCKINGHAM COUNTY
STATION: 119+69.55 -Y-

SHEET 3 OF 3

NORTH CAROLINA PROFESSIONAL SEAL 042382 ENGINEER LENOLEN F. WALSON
DocuSigned by: Lenoln Walson
10/20/2025

SEAL AND SIGNATURE APPLY ONLY TO THOSE ELEMENTS IDENTIFIED WITH A STAR (☆) SYMBOL. NO RESPONSIBILITY IS ASSUMED FOR OTHER ITEMS SHOWN.

NORTH CAROLINA PROFESSIONAL SEAL 020123 ENGINEER STEPHEN T. CHAMPION
DocuSigned by: Stephen T. Champion
05/07/2024

STATE OF NORTH CAROLINA
DEPARTMENT OF TRANSPORTATION
RALEIGH

BRIDGE APPROACH SLAB DETAILS

DOCUMENT NOT CONSIDERED FINAL UNLESS ALL SIGNATURES COMPLETED

Johnson, Mirmiran, & Thompson Inc.
4700 Falls of Neuse Rd, Suite 100,
Raleigh, NC, 27609
License No: C-3097

REVISIONS						SHEET NO.
NO.	BY:	DATE:	NO.	BY:	DATE:	S-39
1			3			TOTAL SHEETS
2			4			39

DWN. BY: WDC	DATE: 02/24
CHKD. BY: GFW	DATE: 02/24
DES. EGR. OF RECORD: STC	DATE: 02/24

wdcrutcher
DGN: pw:\\jmt-pw.bentley.com:jmt-pw-01\Documents\Projects\2016\6-0988-005\Design\Structures\PLANS\GN\077_I-5898_SMU_AS03_S39.dgn
TIME: 08:18 AM on Sunday, May 05, 2024

STANDARD NOTES

DESIGN DATA:

SPECIFICATIONS	AASHTO (CURRENT)
LIVE LOAD	SEE PLANS
IMPACT ALLOWANCE	SEE AASHTO
STRESS IN EXTREME FIBER OF STRUCTURAL STEEL - AASHTO M270 GRADE 36	20,000 LBS. PER SQ. IN.
- AASHTO M270 GRADE 50W	27,000 LBS. PER SQ. IN.
- AASHTO M270 GRADE 50	27,000 LBS. PER SQ. IN.
REINFORCING STEEL IN TENSION - GRADE 60	24,000 LBS. PER SQ. IN.
CONCRETE IN COMPRESSION	1,200 LBS. PER SQ. IN.
CONCRETE IN SHEAR	SEE AASHTO
STRUCTURAL TIMBER - TREATED OR UNTREATED EXTREME FIBER STRESS	1,800 LBS. PER SQ. IN.
COMPRESSION PERPENDICULAR TO GRAIN OF TIMBER	375 LBS. PER SQ. IN.
EQUIVALENT FLUID PRESSURE OF EARTH	30 LBS. PER CU. FT. (MINIMUM)

MATERIAL AND WORKMANSHIP:

EXCEPT AS MAY OTHERWISE BE SPECIFIED ON PLANS OR IN THE SPECIAL PROVISIONS, ALL MATERIAL AND WORKMANSHIP SHALL BE IN ACCORDANCE WITH THE 2024 "STANDARD SPECIFICATIONS FOR ROADS AND STRUCTURES" OF THE N. C. DEPARTMENT OF TRANSPORTATION.

STEEL SHEET PILING FOR PERMANENT OR TEMPORARY APPLICATIONS SHALL BE HOT ROLLED.

CONCRETE:

UNLESS OTHERWISE REQUIRED ON PLANS, CLASS A CONCRETE SHALL BE USED FOR ALL PORTIONS OF ALL STRUCTURES WITH THE EXCEPTION THAT: CLASS AA CONCRETE SHALL BE USED IN BRIDGE SUPERSTRUCTURES, ABUTMENT BACKWALLS, AND APPROACH SLABS; AND CLASS B CONCRETE SHALL BE USED FOR SLOPE PROTECTION AND RIP RAP.

CONCRETE CHAMFERS:

UNLESS OTHERWISE NOTED ON THE PLANS, ALL EXPOSED CORNERS ON STRUCTURES SHALL BE CHAMFERED ¾" WITH THE FOLLOWING EXCEPTIONS: TOP CORNERS OF CURBS MAY BE ROUNDED TO 1½" RADIUS WHICH IS BUILT INTO CURB FORMS; CORNERS OF TRANSVERSE FLOOR EXPANSION JOINTS SHALL BE ROUNDED WITH A ¼" FINISHING TOOL UNLESS OTHERWISE REQUIRED ON PLANS; AND CORNERS OF EXPANSION JOINTS IN THE ROADWAY FACES AND TOPS OF CURBS AND SIDEWALKS SHALL BE ROUNDED TO A ¼" RADIUS WITH A FINISHING STONE OR TOOL UNLESS OTHERWISE REQUIRED ON PLANS.

DOWELS:

DOWELS WHEN INDICATED ON PLANS AS FOR CULVERT EXTENSIONS, SHALL BE EMBEDDED AT LEAST 12" INTO THE OLD CONCRETE AND GROUTED INTO PLACE WITH 1:2 CEMENT MORTAR.

ALLOWANCE FOR DEAD LOAD DEFLECTION, SETTLEMENT, ETC. IN CASTING SUPERSTRUCTURES:

BRIDGES SHALL BE BUILT ON THE GRADE OR VERTICAL CURVE SHOWN ON PLANS. SLABS, CURBS AND PARAPETS SHALL CONFORM TO THE GRADE OR CURVE.

ALL DIMENSIONS WHICH ARE GIVEN IN SECTION AND ARE AFFECTED BY DEAD LOAD DEFLECTIONS ARE DIMENSIONS AT CENTER LINE OF BEARING UNLESS OTHERWISE NOTED ON PLANS. IN SETTING FORMS FOR STEEL BEAM BRIDGES AND PRESTRESSED CONCRETE GIRDER BRIDGES, ADJUSTMENTS SHALL BE MADE DUE TO THE DEAD LOAD DEFLECTIONS FOR THE ELEVATIONS SHOWN. WHERE BLOCKS ARE SHOWN OVER BEAMS FOR BUILDING UP TO THE SLAB, THE VERTICAL DIMENSIONS OF THE BLOCKS SHALL BE ADJUSTED BETWEEN BEARINGS TO COMPENSATE FOR DEAD LOAD DEFLECTIONS, VERTICAL CURVE ORDINATE, AND ACTUAL BEAM CAMBER. WHERE BOTTOM OF SLAB IS IN LINE WITH BOTTOM OF TOP FLANGES, DEPTH OF SLAB BETWEEN BEARINGS SHALL BE ADJUSTED TO COMPENSATE FOR DEAD LOAD DEFLECTION, VERTICAL CURVE ORDINATE, AND ACTUAL BEAM CAMBER.

IN SETTING FALSEWORK AND FORMS FOR REINFORCED CONCRETE SPANS, AN ALLOWANCE SHALL BE MADE FOR DEAD LOAD DEFLECTIONS, SETTLEMENT OF FALSEWORK, AND PERMANENT CAMBER WHICH SHALL BE PROVIDED FOR IN ADDITION TO THE ELEVATIONS SHOWN. AFTER REMOVAL OF THE FALSEWORK, THE FINISHED STRUCTURES SHALL CONFORM TO THE PROFILE AND ELEVATIONS SHOWN ON THE PLANS AND CONSTRUCTION ELEVATIONS FURNISHED BY THE ENGINEER.

DETAILED DRAWINGS FOR FALSEWORK OR FORMS FOR BRIDGE SUPERSTRUCTURE AND ANY STRUCTURE OR PARTS OF A STRUCTURE AS NOTED ON THE PLANS SHALL BE SUBMITTED TO THE ENGINEER FOR APPROVAL BEFORE CONSTRUCTION OF THE FALSEWORK OR FORMS IS STARTED.

REINFORCING STEEL:

ALL REINFORCING STEEL SHALL BE DEFORMED. DIMENSIONS RELATIVE TO PLACEMENT OF REINFORCING ARE TO CENTERS OF BARS UNLESS OTHERWISE INDICATED IN THE PLANS. DIMENSIONS ON BAR DETAILS ARE TO CENTERS OF BARS OR ARE OUT TO OUT AS INDICATED ON PLANS.

WIRE BAR SUPPORTS SHALL BE PROVIDED FOR REINFORCING STEEL WHERE INDICATED ON THE PLANS. WHEN BAR SUPPORT PIECES ARE PLACED IN CONTINUOUS LINES, THEY SHALL BE SO PLACED THAT THE ENDS OF THE SUPPORTING WIRES SHALL BE LAPPED TO LOCK LEGS ON ADJOINING PIECES.

STRUCTURAL STEEL:

AT THE CONTRACTOR'S OPTION, HE MAY SUBSTITUTE ⅞" ∅ SHEAR STUDS FOR THE ¾" ∅ STUDS SPECIFIED ON THE PLANS. THIS SUBSTITUTION SHALL BE MADE AT THE RATE OF 3 - ⅞" ∅ STUDS FOR 4 - ¾" ∅ STUDS, AND STUD SPACING CHANGES SHALL BE MADE AS NECESSARY TO PROVIDE THE SAME EQUIVALENT NUMBER OF ⅞" ∅ STUDS ALONG THE BEAM AS SHOWN FOR ¾" ∅ STUDS BASED ON THE RATIO OF 3 - ⅞"∅ STUDS FOR 4 - ¾" ∅ STUDS. STUDS OF THE LENGTH SPECIFIED ON THE PLANS MUST BE PROVIDED. THE MAXIMUM SPACING SHALL BE 2'-0".

EXCEPT AT THE INTERIOR SUPPORTS OF CONTINUOUS BEAMS WHERE THE COVER PLATE IS IN CONTACT WITH BEARING PLATE, THE CONTRACTOR MAY, AT HIS OPTION, SUBSTITUTE FOR THE COVER PLATES DESIGNATED ON THE PLANS COVER PLATES OF THE EQUIVALENT AREA PROVIDED THESE PLATES ARE AT LEAST 5/16" IN THICKNESS AND DO NOT EXCEED A WIDTH EQUAL TO THE FLANGE WIDTH LESS 2" OR A THICKNESS EQUAL TO 2 TIMES THE FLANGE THICKNESS. THE SIZE OF FILLET WELDS SHALL CONFORM TO THE REQUIREMENTS OF THE CURRENT ANSI/AASHTO/AWS "BRIDGE WELDING CODE". ELECTROSLAG WELDING WILL NOT BE PERMITTED.

WITH THE SOLE EXCEPTION OF EDGES AT SURFACES WHICH BEAR ON OTHER SURFACES, ALL SHARP EDGES AND ENDS OF SHAPES AND PLATES SHALL BE SLIGHTLY ROUNDED BY SUITABLE MEANS TO A RADIUS OF APPROXIMATELY 1/16" OR EQUIVALENT FLAT SURFACE AT A SUITABLE ANGLE PRIOR TO PAINTING, GALVANIZING, OR METALLIZING.

HANDRAILS AND POSTS:

METAL STANDARDS AND FACES OF THE CONCRETE END POSTS FOR THE METAL RAIL SHALL BE SET NORMAL TO THE GRADE OF THE CURB, UNLESS OTHERWISE SHOWN ON PLANS. THE METAL RAIL AND TOPS OF CONCRETE POSTS USED WITH THE ALUMINUM RAIL SHALL BE BUILT PARALLEL TO THE GRADE OF THE CURB.

METAL HANDRAILS SHALL BE IN ACCORDANCE WITH THE PLANS. RAILS SHALL BE AS MANUFACTURED FOR BRIDGE RAILING. CASTINGS SHALL BE OF A UNIFORM APPEARANCE. FINS AND OTHER DEFORMATIONS RESULTING FROM CASTING OR OTHERWISE SHALL BE REMOVED IN A MANNER SO THAT A UNIFORM COLORING OF THE COMPLETED CASTING SHALL BE OBTAINED. CASTINGS WITH DISCOLORATIONS OR OF NON-UNIFORM COLORING WILL NOT BE ACCEPTED. CERTIFIED MILL REPORTS ARE REQUIRED FOR METAL RAILS AND POSTS.

SPECIAL NOTES:

GENERALLY, IN CASE OF DISCREPANCY, THIS STANDARD SHEET OF NOTES SHALL GOVERN OVER THE SPECIFICATIONS, BUT THE REMAINDER OF THE PLANS SHALL GOVERN OVER NOTES HEREON, AND SPECIAL PROVISIONS SHALL GOVERN OVER ALL. SEE SPECIFICATIONS ARTICLE 105-4.