DocuSign Envelope ID: CFF976E0-6897-4697-83E4-E7CC4C08C579

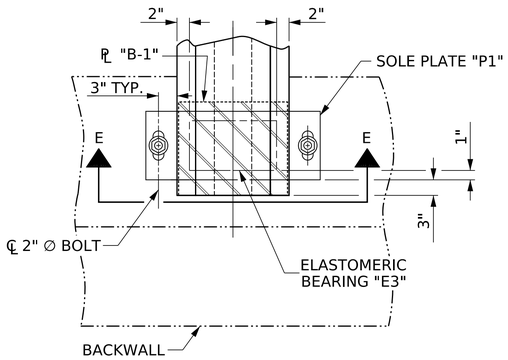

TYPICAL PLAN

(SHOWING END BENT)

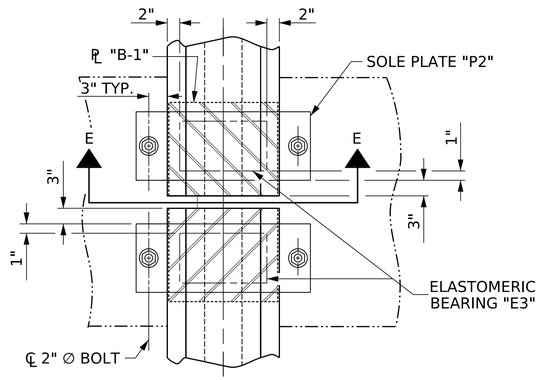

TYPICAL PLAN

(SHOWING BENT)

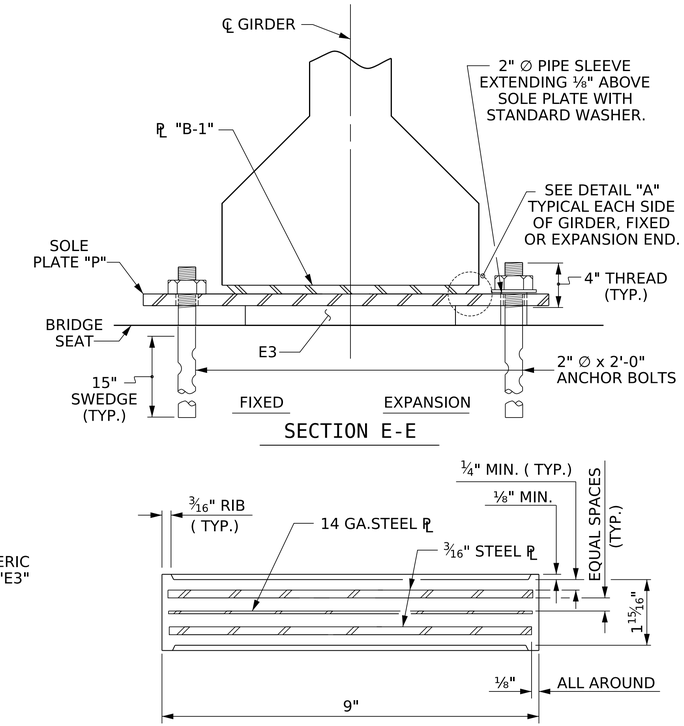

TYPICAL SECTION OF ELASTOMERIC BEARINGS

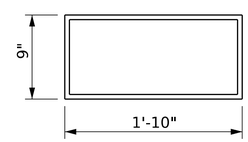

E3 (32 REQ'D)

PLAN VIEW OF ELASTOMERIC BEARING

TYPE IV

MAXIMUM ALLOWABLE SERVICE LOADS	
D.L.+L.L. (NO IMPACT)	
TYPE IV	225 k

NOTES

AT ALL FIXED POINTS OF SUPPORT, NUTS FOR ANCHOR BOLTS ARE TO BE TIGHTENED FINGER TIGHT AND THEN BACKED OFF ½ TURN. THE THREAD OF THE NUT AND BOLT SHALL THEN BE BURRED WITH A SHARP POINTED TOOL.

THE 2" ∅ PIPE SLEEVE SHALL BE CUT FROM SCHEDULE 40 PVC PLASTIC PIPE. THE PVC PLASTIC PIPE SHALL MEET THE REQUIREMENTS OF ASTM D1785.

STEEL SOLE PLATES, ANCHOR BOLTS, NUTS, AND WASHERS SHALL BE GALVANIZED IN ACCORDANCE WITH THE STANDARD SPECIFICATIONS.

PRIOR TO WELDING, GRIND THE GALVANIZED SURFACE OF THE PORTION OF THE EMBEDDED PLATE AND SOLE PLATE THAT ARE TO BE WELDED. AFTER WELDING, DAMAGED GALVANIZED SURFACES SHALL BE REPAIRED IN ACCORDANCE WITH THE STANDARD SPECIFICATIONS.

WHEN WELDING THE SOLE PLATE TO THE EMBEDDED PLATE IN THE GIRDER, USE TEMPERATURE INDICATING WAX PENS, OR OTHER SUITABLE MEANS, TO ENSURE THAT THE TEMPERATURE OF THE SOLE PLATE DOES NOT EXCEED 300°F. TEMPERATURES ABOVE THIS MAY DAMAGE THE ELASTOMER.

SOLE PLATE "P", BOLTS, NUTS, WASHERS, AND PIPE SLEEVE SHALL BE INCLUDED IN THE PAY ITEM FOR PRESTRESSED CONCRETE GIRDERS.

ANCHOR BOLTS SHALL MEET THE REQUIREMENTS OF ASTM A449. NUTS SHALL MEET THE REQUIREMENTS OF AASHTO M291-DH OR AASHTO M292-2H. WASHERS SHALL MEET THE REQUIREMENTS OF AASHTO M293. SHOP DRAWINGS ARE NOT REQUIRED FOR ANCHOR BOLT, NUTS AND WASHERS. SHOP INSPECTION IS REQUIRED.

ALL SURFACES OF BEARING PLATES SHALL BE SMOOTH AND STRAIGHT.

THE ELASTOMER IN THE STEEL REINFORCED BEARINGS SHALL HAVE A SHEAR MODULUS OF 0.160 KSI, IN ACCORDANCE WITH AASHTO M251.

FOR STEEL REINFORCED ELASTOMERIC BEARINGS, SEE STANDARD SPECIFICATIONS.

ALL SOLE PLATES SHALL BE AASHTO M270 GRADE 36.

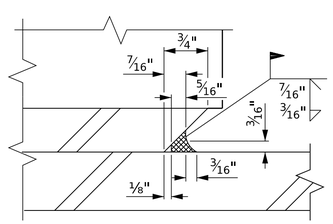

DETAIL "A"

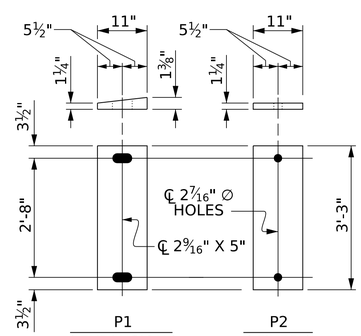

P1 (EXPANSION) P1 (16 REQ'D)

P2 (FIXED) P2 (16 REQ'D)

SOLE PLATE DETAILS ("P")

PROJECT NO. I-5898

ROCKINGHAM COUNTY

STATION: 119+69.55 -Y-

DocuSigned by: Stephen T. Champion

NORTH CAROLINA PROFESSIONAL SEAL 020123 ENGINEER STEPHEN T. CHAMPION 05/07/2024

DOCUMENT NOT CONSIDERED FINAL UNLESS ALL SIGNATURES COMPLETED

Johnson, Mirmiran, & Thompson Inc.
4700 Falls of Neuse Rd, Suite 100,
Raleigh, NC, 27609
License No: C-3097

STATE OF NORTH CAROLINA
DEPARTMENT OF TRANSPORTATION
RALEIGH

STANDARD

ELASTOMERIC BEARING DETAILS

PRESTRESSED CONCRETE GIRDER SUPERSTRUCTURE

REVISIONS								SHEET NO.
NO.	BY:	DATE:	NO.	BY:	DATE:			S-16
1			3					TOTAL SHEETS
2			4					39

STD. NO. EB3

DWN. BY: WDC	DATE: 02/24	DRAWN BY : WJH	8/89	REV. 1/15	MAA/TMG
CHKD. BY: GFW	DATE: 02/24	CHECKED BY : CRK	8/89	REV. 12/17	MAA/THC
DES. EGR. OF RECORD: STC	DATE: 02/24			REV. 10/21	BNB/AAI

wdcrutcher
DGN: pw:\\jmt-pw.bentley.com:jmt-pw-01\Documents\Projects\2016\6-0988-005\Design\Structures\PLANS\GENN031-I-5898_SMU_B001_S16.dgn
TIME: Ocurr All on Sunday, May 05, 2024