09/08/99

TIP PROJECT: B-5831

CONTRACT: C205044

STRUCTURE

STATE OF NORTH CAROLINA
DIVISION OF HIGHWAYS

STATE	STATE PROJECT REFERENCE NO.	SHEET NO.	TOTAL SHEETS
N.C.	B-5831		

STATE PROJ. NO.	F.A. PROJ. NO.	DESCRIPTION
45784.1.2		PE
45784.2.1	NHP-0077(006)	R/W, UTIL.
45784.3.1	NHP-0077(006)	CONST

YADKIN & SURRY COUNTIES

LOCATION: REPLACE BRIDGE NO. 6 OVER YADKIN RIVER, NORFOLK SOUTHERN RAILROAD, AND NC 268 ON I-77 NBL

TYPE OF WORK: GRADING, DRAINAGE, PAVING, AND STRUCTURE

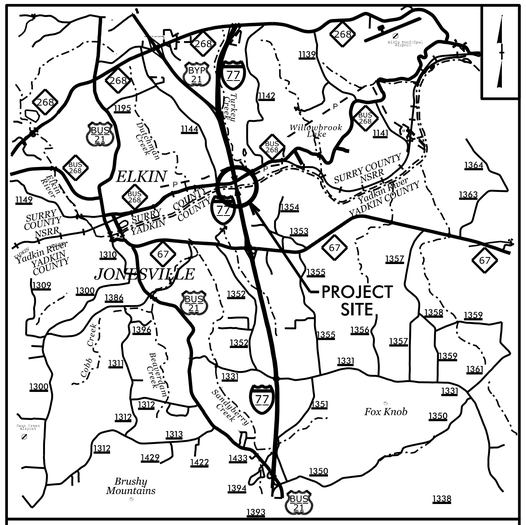

VICINITY MAP

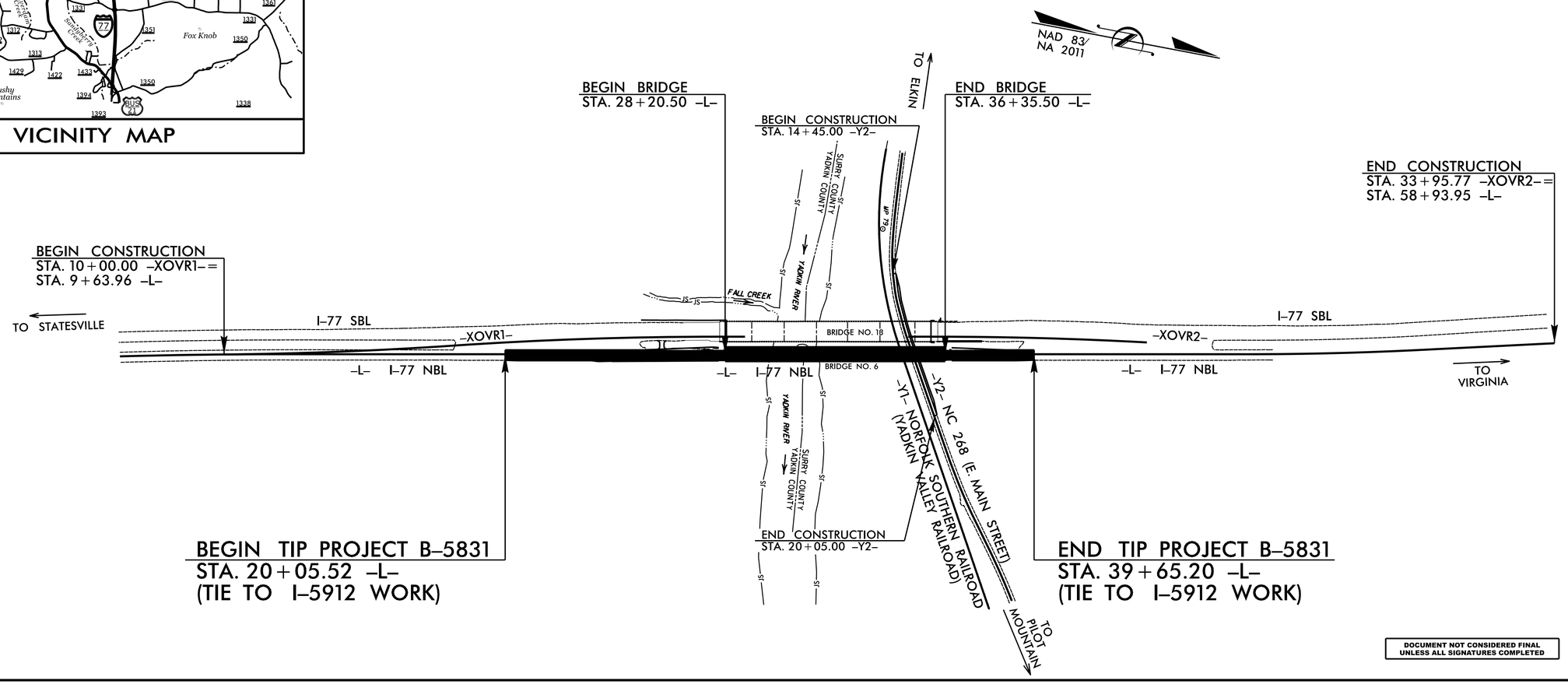

DOCUMENT NOT CONSIDERED FINAL UNLESS ALL SIGNATURES COMPLETED

DESIGN DATA

ADT 2025 = 41,170
ADT 2045 = 50,420
K = 7 %
D = 55 %
T = 21 % *
V = 75 MPH
* (TTST 17% + DUAL 4%)

FUNC CLASS = INTERSTATE
STATEWIDE TIER DESIGN

PROJECT LENGTH

LENGTH ROADWAY TIP PROJECT B-5831	=	0.217 mile
LENGTH STRUCTURES TIP PROJECT B-5831	=	0.154 mile
TOTAL LENGTH TIP PROJECT B-5831	=	0.371 mile

PLANS PREPARED BY:
TGS ENGINEERS
706 HILLSBOROUGH ST
SUITE 200
RALEIGH, NC 27603

PLANS PREPARED FOR:
DAVID STUTTS, P.E.
NCDOT CONTACT

LETTING DATE:
NOVEMBER 18, 2025

MARC CHEEK, PE
STRUCTURES DESIGN ENGINEER

2024 STANDARD SPECIFICATIONS

STRUCTURES DESIGN ENGINEER
NORTH CAROLINA PROFESSIONAL SEAL 20125 ENGINEER MARSHALL G. CHEEK, JR.
Signed by: Marshall G. Cheek, Jr.
5FBCC2F3A4DC413...
9/23/2025
SIGNATURE

9/18/2025
G:\workdir\ncdot-pw.bentley.com_ncdot-pw-01\zachary smith\d0166590\Title Sheet.dgn
ZSmith

F.A. PROJECT NO.: NHP-077(006)

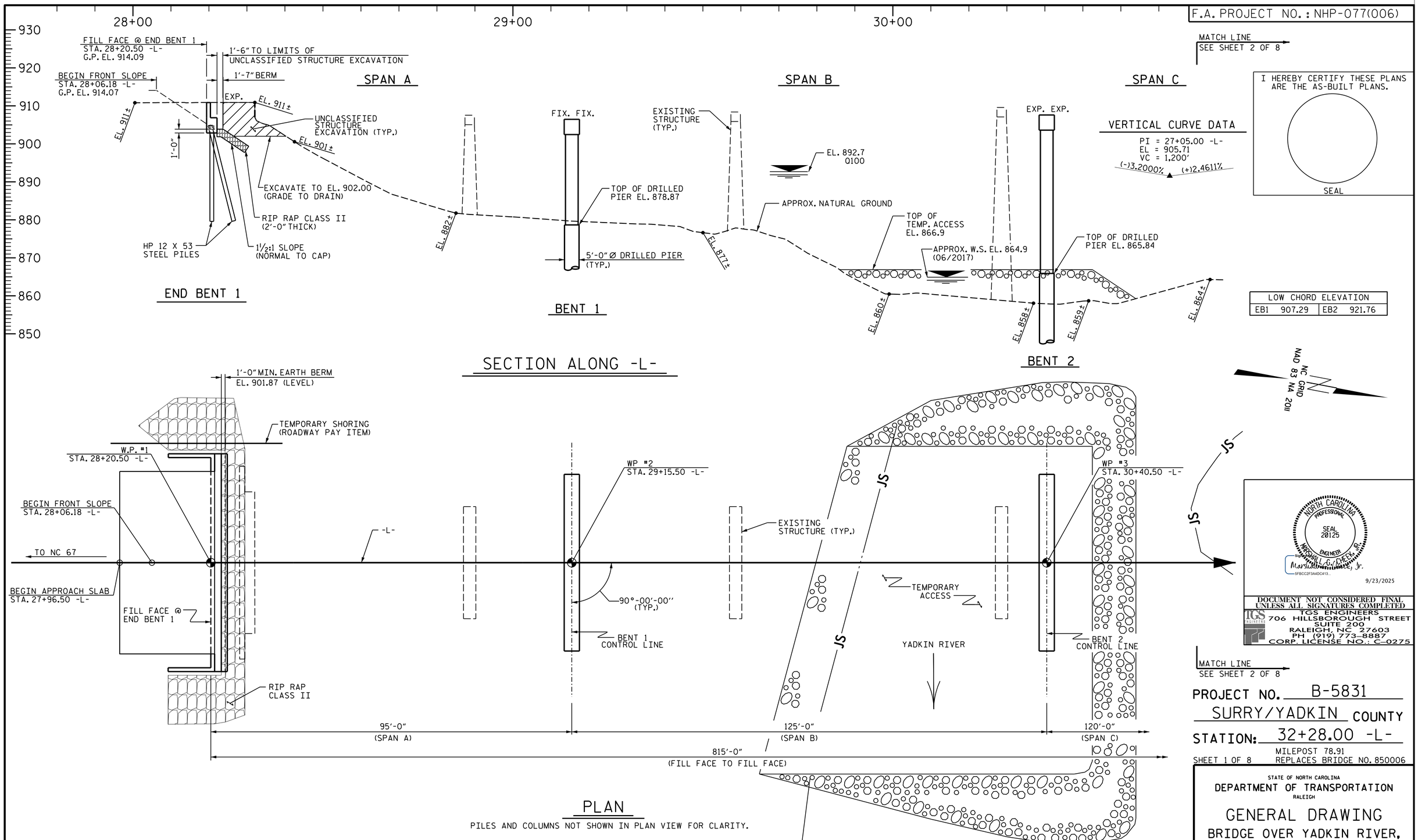

NORTH CAROLINA PROFESSIONAL SEAL 20125 ENGINEER
MARSHALL G. CHEEK, JR.
Marshall G. Cheek, Jr.
5FBCC2F3A4DC413...
9/23/2025

DOCUMENT NOT CONSIDERED FINAL UNLESS ALL SIGNATURES COMPLETED

TGS ENGINEERS
706 HILLSBOROUGH STREET
SUITE 200
RALEIGH, NC 27603
PH (919) 773-8887
CORP. LICENSE NO.: C-0275

MATCH LINE
SEE SHEET 2 OF 8

PROJECT NO. B-5831

SURRY/YADKIN COUNTY

STATION: 32+28.00 -L-

MILEPOST 78.91

SHEET 1 OF 8

REPLACES BRIDGE NO. 850006

STATE OF NORTH CAROLINA
DEPARTMENT OF TRANSPORTATION
RALEIGH

GENERAL DRAWING

BRIDGE OVER YADKIN RIVER, NORFOLK SOUTHERN RR, AND NC 268 ON I-77 NBL BETWEEN NC 268 AND NC 67

REVISIONS						
NO.	BY:	DATE:	NO.	BY:	DATE:	
1			3			
2			4			

SHEET NO. S-1

TOTAL SHEETS 61

DRAWN BY :	ZCS	DATE :	5/24
CHECKED BY :	MGC	DATE :	7/24
DESIGN ENGINEER OF RECORD:	ZCS	DATE :	12/24

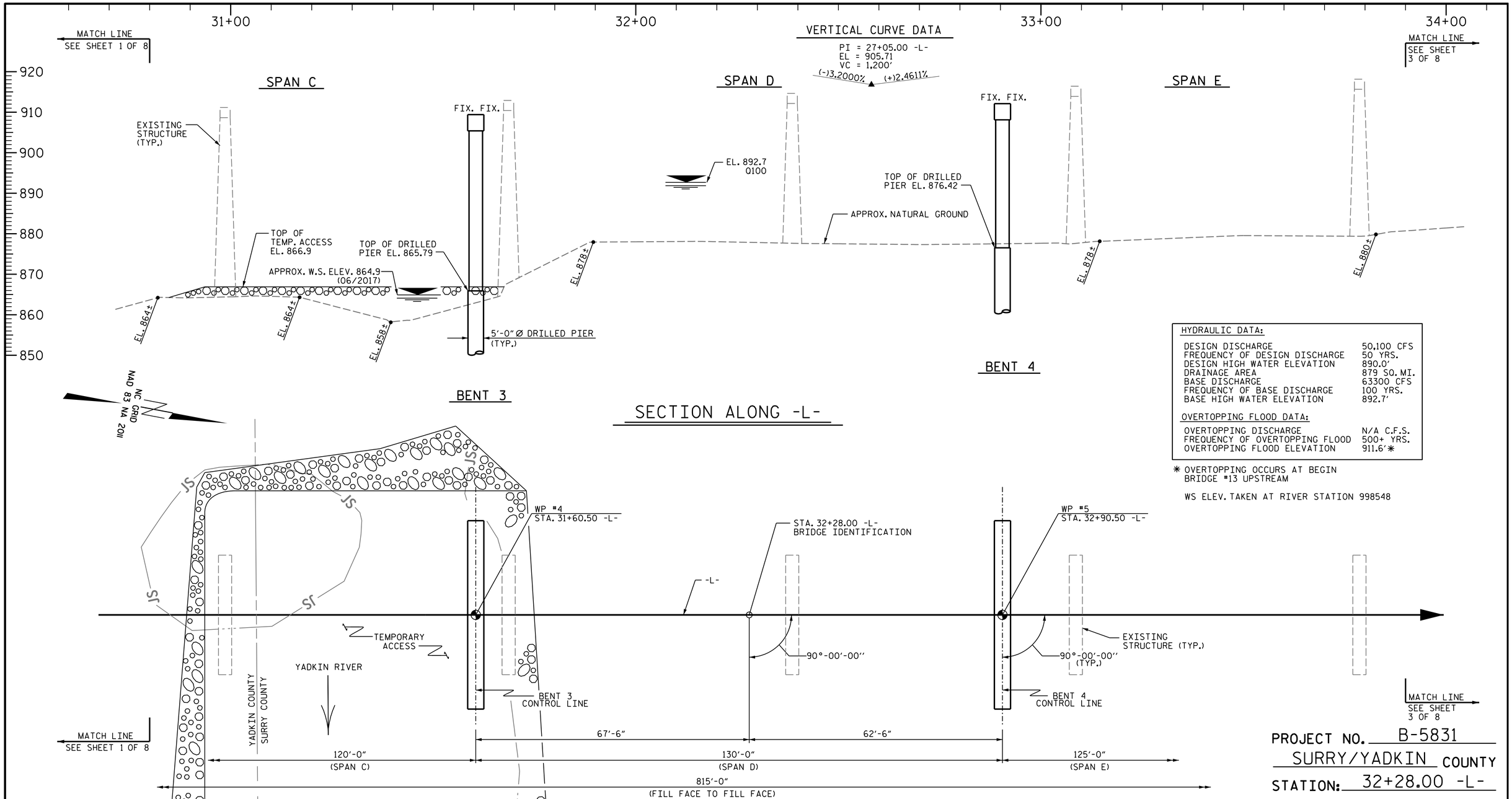

HYDRAULIC DATA:

DESIGN DISCHARGE	50,100 CFS
FREQUENCY OF DESIGN DISCHARGE	50 YRS.
DESIGN HIGH WATER ELEVATION	890.0'
DRAINAGE AREA	879 SQ. MI.
BASE DISCHARGE	63300 CFS
FREQUENCY OF BASE DISCHARGE	100 YRS.
BASE HIGH WATER ELEVATION	892.7'

OVERTOPPING FLOOD DATA:

OVERTOPPING DISCHARGE	N/A C.F.S.
FREQUENCY OF OVERTOPPING FLOOD	500+ YRS.
OVERTOPPING FLOOD ELEVATION	911.6'*

* OVERTOPPING OCCURS AT BEGIN BRIDGE #13 UPSTREAM

WS ELEV. TAKEN AT RIVER STATION 998548

PROJECT NO. B-5831

SURRY/YADKIN COUNTY

STATION: 32+28.00 -L-

SHEET 2 OF 8

NORTH CAROLINA PROFESSIONAL SEAL 20125 ENGINEER MARSHALL G. CHECK, JR.

Marshall G. Check, Jr.

SFBCC2F3A4DC413...

9/23/2025

DOCUMENT NOT CONSIDERED FINAL UNLESS ALL SIGNATURES COMPLETED

TGS ENGINEERS
706 HILLSBOROUGH STREET
SUITE 200
RALEIGH, NC 27603
PH (919) 773-8887
CORP. LICENSE NO.: C-0275

STATE OF NORTH CAROLINA
DEPARTMENT OF TRANSPORTATION
RALEIGH

GENERAL DRAWING

BRIDGE OVER YADKIN RIVER, NORFOLK SOUTHERN RR, AND NC 268 ON I-77 NBL BETWEEN NC 268 AND NC 67

REVISIONS						
NO.	BY:	DATE:	NO.	BY:	DATE:	
1			3			
2			4			

SHEET NO. S-2

TOTAL SHEETS 61

DRAWN BY :	ZCS	DATE :	5/24
CHECKED BY :	MGC	DATE :	7/24
DESIGN ENGINEER OF RECORD:	ZCS	DATE :	12/24

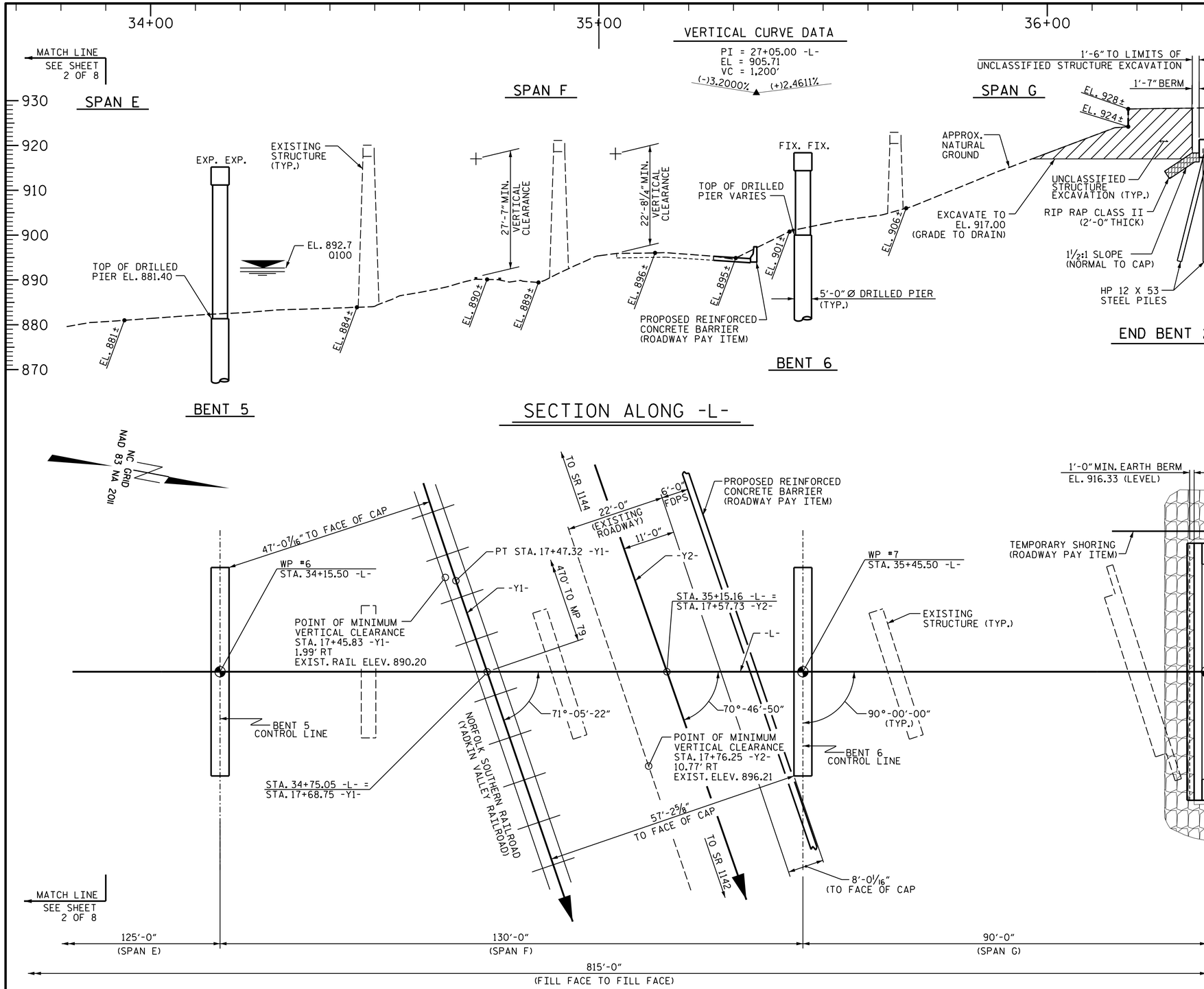

SECTION ALONG -L-

TOP OF RAIL ELEVATIONS
(LOOKING UPSTATION ALONG RAILROAD)

STATION	LEFT RAIL	RIGHT RAIL
17+20.00	890.13	890.25
17+40.00	890.10	890.21
17+60.00	890.08	890.17
17+80.00	890.06	890.14
18+00.00	890.03	890.10
18+20.00	890.02	890.08

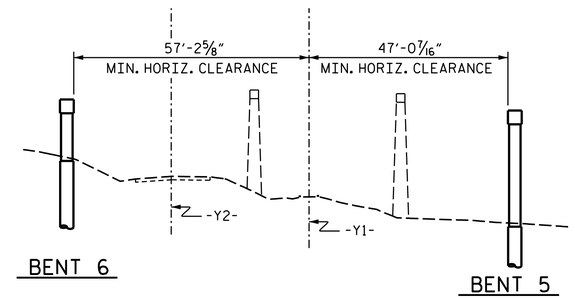

SECTION NORMAL TO RAILROAD

VERTICAL CURVE DATA

PI = 27+05.00 -L-
EL = 905.71
VC = 1,200'
(-)3.2000% (+)2.4611%

PLAN

PILES AND COLUMNS NOT SHOWN IN PLAN VIEW FOR CLARITY.

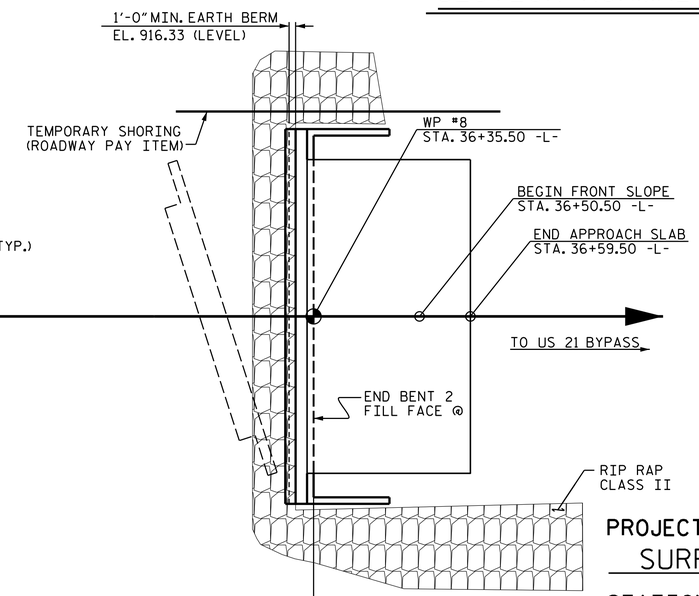

PROJECT NO. B-5831
SURRY/YADKIN COUNTY
STATION: 32+28.00 -L-

SHEET 3 OF 8

NORTH CAROLINA PROFESSIONAL SEAL 20125 ENGINEER MARSHALL G. CHECKS, JR.
Marshall G. Checks, Jr.
5FBCC2F3A4DC413...
9/23/2025

DOCUMENT NOT CONSIDERED FINAL UNLESS ALL SIGNATURES COMPLETED

TGS ENGINEERS
706 HILLSBOROUGH STREET
SUITE 200
RALEIGH NC 27603
PH (919) 773-8887
CORP. LICENSE NO.: C-0275

STATE OF NORTH CAROLINA
DEPARTMENT OF TRANSPORTATION
RALEIGH

GENERAL DRAWING
BRIDGE OVER YADKIN RIVER, NORFOLK SOUTHERN RR, AND NC 268 ON I-77 NBL BETWEEN NC 268 AND NC 67

REVISIONS							
NO.	BY:	DATE:	NO.	BY:	DATE:	SHEET NO.	S-3
1			3			TOTAL SHEETS	61
2			4				

DRAWN BY :	ZCS	DATE :	5/24
CHECKED BY :	MGC	DATE :	7/24
DESIGN ENGINEER OF RECORD:	ZCS	DATE :	12/24

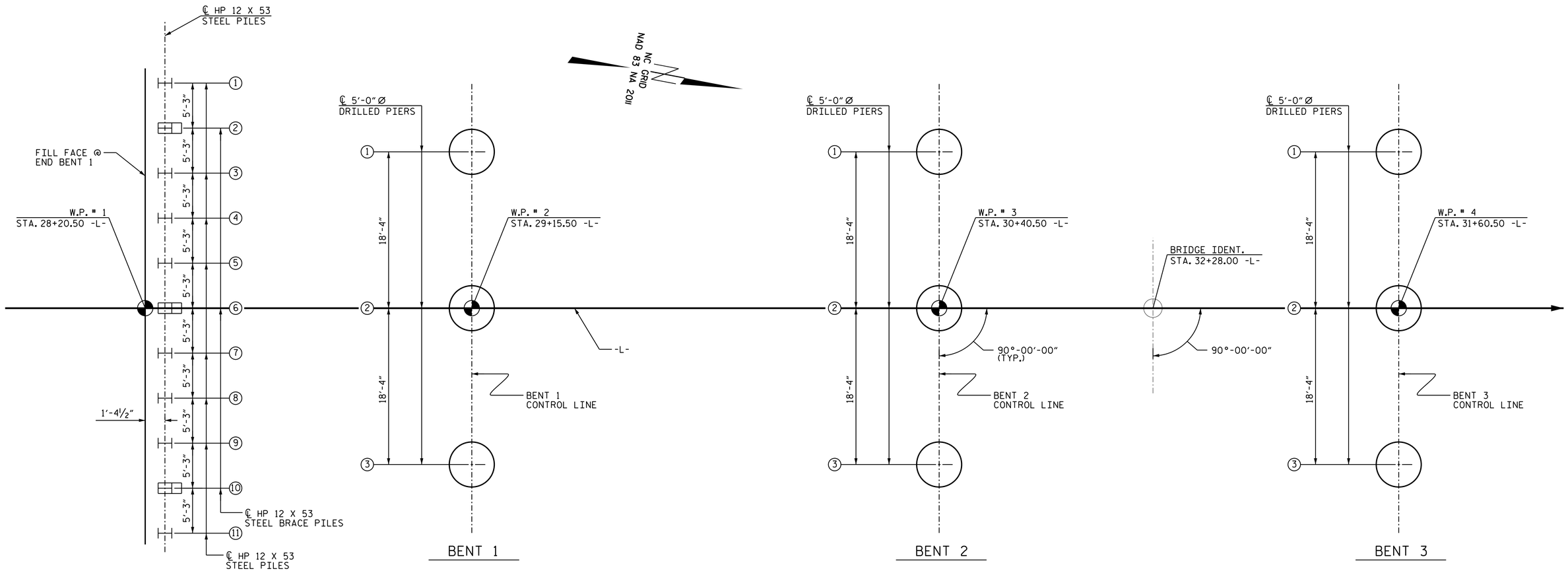

FOUNDATION LAYOUT

ALL END BENT PILES ARE HP 12 X 53.
DIMENSIONS LOCATING PILES ARE SHOWN TO THE PILE CENTERLINE AT THE BOTTOM OF THE CAP.
END BENT BRACE PILES ARE BATTERED 3:12.

NOTES

FOR PILES, SEE SECTION 450 OF THE STANDARD SPECIFICATIONS.

FOR DRILLED PIERS, SEE SECTION 411 OF THE STANDARD SPECIFICATIONS.

POLYMER SLURRY DRILLING IS REQUIRED FOR THE CONSTRUCTION OF DRILLED PIERS AT BENT 1 AND BENTS 4 THROUGH 6.

PROJECT NO. B-5831
SURRY/YADKIN COUNTY
STATION: 32+28.00 -L-

SHEET 4 OF 8

NORTH CAROLINA PROFESSIONAL SEAL 20125 ENGINEER MARSHALL G. MICKLE, JR.
Marshall G. Mickle, Jr.
5FBCC2F3A4DC413...
9/23/2025

DOCUMENT NOT CONSIDERED FINAL UNLESS ALL SIGNATURES COMPLETED

TGS ENGINEERS
706 HILLSBOROUGH STREET
SUITE 200
RALEIGH, NC 27603
PH (919) 773-8887
CORP. LICENSE NO.: C-0275

STATE OF NORTH CAROLINA
DEPARTMENT OF TRANSPORTATION
RALEIGH

GENERAL DRAWING
BRIDGE OVER YADKIN RIVER, NORFOLK SOUTHERN RR, AND NC 268 ON I-77 NBL BETWEEN NC 268 AND NC 67

REVISIONS						SHEET NO.
NO.	BY:	DATE:	NO.	BY:	DATE:	S-4
1			3			TOTAL SHEETS
2			4			61

DRAWN BY :	ZCS	DATE :	5/24
CHECKED BY :	MGC	DATE :	6/24
DESIGN ENGINEER OF RECORD:	ZCS	DATE :	12/24

$$$$$$SYSTIME$$$$$
$$$$$$$$$$$$$$$$$$$$$$DGN$$$$$$$$$$$$$$$$$$$$$$$$
$$$$USERNAME$$$$

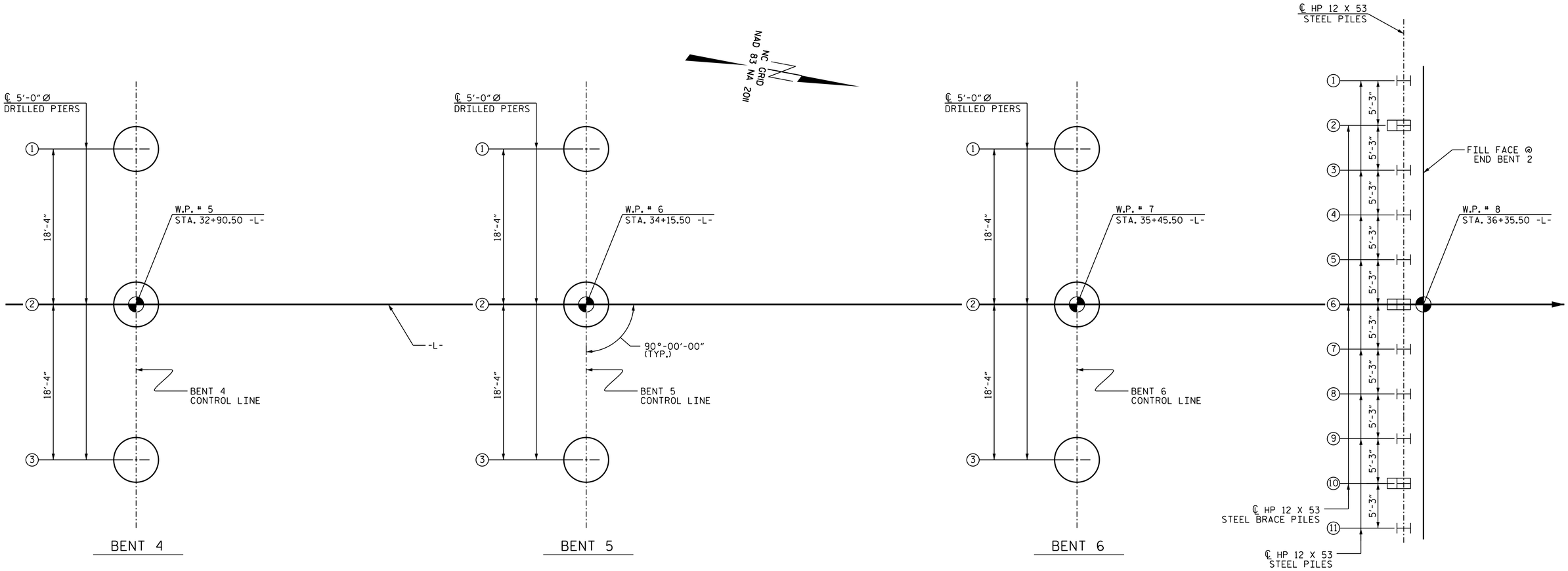

FOUNDATION LAYOUT

ALL END BENT PILES ARE HP 12 X 53.
DIMENSIONS LOCATING PILES ARE SHOWN TO THE PILE CENTERLINE AT THE BOTTOM OF THE CAP.
END BENT BRACE PILES ARE BATTERED 3:12.

PROJECT NO. B-5831
SURRY/YADKIN COUNTY
STATION: 32+28.00 -L-

SHEET 5 OF 8

NORTH CAROLINA PROFESSIONAL SEAL 20125 ENGINEER MARSHALL G. CHECK, JR.
Marshall G. Check, Jr.
5FBCC2F3A4DC413...
9/23/2025

DOCUMENT NOT CONSIDERED FINAL UNLESS ALL SIGNATURES COMPLETED

TGS ENGINEERS
706 HILLSBOROUGH STREET
SUITE 200
RALEIGH, NC 27603
PH (919) 773-8887
CORP. LICENSE NO.: C-0275

STATE OF NORTH CAROLINA
DEPARTMENT OF TRANSPORTATION
RALEIGH

GENERAL DRAWING
BRIDGE OVER YADKIN RIVER, NORFOLK SOUTHERN RR, AND NC 268 ON I-77 NBL BETWEEN NC 268 AND NC 67

REVISIONS						SHEET NO.
NO.	BY:	DATE:	NO.	BY:	DATE:	S-5
1			3			TOTAL SHEETS
2			4			61

DRAWN BY :	ZCS	DATE :	5/24
CHECKED BY :	MGC	DATE :	6/24
DESIGN ENGINEER OF RECORD:	ZCS	DATE :	12/24

$$$$$$SYSTIME$$$$$
$$$$$$$$$$$$$$$$$$$$$$$$DGN$$$$$$$$$$$$$$$$$$$$$$$$
$$$$USERNAME$$$$

SUMMARY OF PILE INFORMATION/INSTALLATION

(BLANK ENTRIES INDICATE ITEM IS NOT APPLICABLE TO STRUCTURE)

End Bent/ Bent No. Pile(s) #-# (e.g., "Bent 1, Piles 1-5")	Factored Resistance per Pile KIPS	Pile Cut-Off (Top of Pile) Elevation FT	Estimated Pile Length per Pile FT	Scour Critical Elevation FT	Driven Piles			Predrilling For Piles ✱			Drilled-in-Piles		
					Min. Pile Tip (Tip No Higher Than) Elev. FT	Required Driving Resistance (RDR)✱✱ per Pile KIPS	Total Pile Redrives Quantity EACH	Predrilling Length per Pile LIN FT	Predrilling Elevation (Elev Not To Predrill Below) FT	Maximum Predrilling Dia INCHES	Pile Excavation (Bottom of Hole) Elev FT	Pile Exc Not In Soil per Pile LIN FT	Pile Exc In Soil per Pile LIN FT
End Bent 1, Piles 1-11	240	905.03	50			400							
End Bent 2, Piles 1-11	240	919.49	25			400							

✱ Predrilling for Piles is required for end bents/bents with a predrilling length and at the Contractor's option for end bents/bents with predrilling information but no predrilling length.

$$✱✱\text{RDR} = \frac{\text{Factored Resistance + Factored Downdrag Load + Factored Dead Load}}{\text{Dynamic Resistance Factor}} + \text{Nominal Downdrag Resistance} + \frac{\text{Nominal Scour Resistance}}{\text{Scour Resistance Factor}}$$

PILE DESIGN INFORMATION

(BLANK ENTRIES INDICATE ITEM IS NOT APPLICABLE TO STRUCTURE)

End Bent/ Bent No. Pile(s) #-# (e.g., "Bent 1, Piles 1-5")	Factored Axial Load per Pile KIPS	Factored Downdrag Load per Pile KIPS	Factored Dead Load ✱ per Pile KIPS	Dynamic Resistance Factor	Nominal Downdrag Resistance per Pile KIPS	Nominal Scour Resistance per Pile KIPS	Scour Resistance Factor (Default = 1.00)
End Bent 1, Piles 1-11	240			0.60			
End Bent 2, Piles 1-11	240			0.60			

✱ Factored Dead Load is factored weight of pile above ground line.

SUMMARY OF DRILLED PIER INFORMATION/INSTALLATION

(BLANK ENTRIES INDICATE ITEM IS NOT APPLICABLE TO STRUCTURE)

End Bent/ Bent No. Piers) #-# (e.g., "Bent 1, Piers 1-3")	Factored Resistance per Pier KIPS	Minimum Pier Tip (Tip No Higher Than) Elevation FT	Required Tip Resistance Per Pier KSF	Scour Critical Elevation FT	Minimum Drilled Pier Penetration Into Rock/Weathered Rock per Pier LIN FT	Minimum Drilled Pier Penetration Into Rock per Pier LIN FT	Drilled Pier Length per Pier LIN FT	Drilled Pier Length Not In Soil per Pier LIN FT	Drilled Pier Length In Soil per Pier LIN FT	Permanent Steel Casing Required? YES or MAYBE	Permanent Steel Casing Tip Elevation (Elev Not To Extend Casing Below) FT	Permanent Steel Casing Length ✱ per Pier LIN FT
Bent 1, Piers 1-2	1520	823.0	40	857	20.0		55.87					
Bent 1, Pier 3	1520	837.0	40	857	20.0		41.87					
Bent 2, Piers 1-3	1650	837.0	100	848		12.0	28.84			YES	854.00	11.84
Bent 3, Piers 1-3	1650	837.0	100	848		12.0	28.79			YES	854.00	11.79
Bent 4, Piers 1-3	1664	834.0	40	856	20.0		42.42					
Bent 5, Pier 1	1664	850.0	40	870	21.0		31.40					
Bent 5, Piers 2-3	1664	840.0	40	870	20.0		41.40					
Bent 6, Pier 1	1542	848.0	40	NA	25.0		54.44					
Bent 6, Pier 2	1542	848.0	40	NA	25.0		53.44					
Bent 6, Pier 3	1542	848.0	40	NA	25.0		52.21					
TOTAL QUANTITY:							728.05					70.89

✱ Permanent Steel Casing Length equals the difference between the ground line or top of drilled pier elevation, whichever is higher, and the permanent casing tip elevation.

NOTES:

1. The Pile and Drilled Pier Foundation Tables are based on the bridge substructure design and foundation recommendations sealed by a North Carolina Professional Engineer (Shiping Yang, 031361) on 3/26/2024.
2. Total Pile Driving Equipment Setup quantity (not shown in Pile Foundation Tables) equals the number of driven piles, ie., the number of piles with a required Driving Resistance.
3. The Engineer will determine the need for PDA Testing, Pipe Pile Plates, Permanent Steel Casings, SPTs, CSL Testing, SID Inspections and PITs when these items may be required.

DRAWN BY : ZCS DATE : 5/24
CHECKED BY : MGC DATE : 7/24

SUMMARY OF DPT / PILE ORDER LENGTHS

(BLANK ENTRIES INDICATE ITEM IS NOT APPLICABLE TO STRUCTURE)

Pile Driving Analyzer (PDA)				Pile Order Lengths	
End Bent/ Bent No.	DPT Required? YES OR MAYBE	DPT Pile Length FT	Total DPT Quantity EACH	End Bent/ Bent No(s)	Pile Order Length Basis ✱ EST or DPT

✱ EST = Pile Order Lengths from estimated pile lengths; DPT = Pile order lengths based on DPT. For groups of end bents/bents with pile order lengths based on DPT, the first end bent/bent no. listed for each group is the representive end bent/bent with the DPT.

SUMMARY OF PILE ACCESSORIES

(BLANK ENTRIES INDICATE ITEM IS NOT APPLICABLE TO STRUCTURE)

End Bent/ Bent No. Pile(s) #-# (e.g., "Bent 1, Piles 1-5")	Pipe Pile Plates Required? YES or MAYBE	Steel Pile Points			Steel Pile Tips Required? YES
		Pipe Pile Cutting Shoes Required? YES	Pipe Pile Conical Points Required? YES	H-Pile Points Required? YES	
TOTAL QUANTITY:					

SUMMARY OF DRILLED PIER TESTING

(BLANK ENTRIES INDICATE ITEM IS NOT APPLICABLE TO STRUCTURE)

End Bent/ Bent No. PIER(s) #-# (e.g., "Bent 1, Piers 1-3")	Standard Penetration Test (SPT) Required? YES or MAYBE	Crosshole Sonic Logging (CSL) Required?✱ YES or MAYBE	Total CSL Tube Length (For All Tubes) per Pier LIN FT	Shaft Inspection Device (SID) Required? YES OR MAYBE	Pile Integrity Test (PIT) Required? MAYBE
Bent 1, Piers 1-2		YES	286.85	YES	
Bent 1, Pier 3		YES	216.85	YES	
Bent 2, Piers 1-3		YES	151.70	YES	
Bent 3, Piers 1-3		YES	201.25	YES	
Bent 4, Piers 1-3		YES	219.60	YES	
Bent 5, Pier 1		YES	164.50	YES	
Bent 5, Piers 2-3		YES	214.50	YES	
Bent 6, Pier 1		YES	279.70	YES	
Bent 6, Pier 2		YES	274.70	YES	
Bent 6, Pier 3		YES	268.55	YES	
TOTAL QUANTITY:		18	3924.65	18	

✱ CSL Tubes are required if CSL Testing is or may be required. The number of CSL Tubes per drilled pier is equal to one tube per foot of design pier diameter with at least 4 tubes per pier. The length of each CSL Tube is equal to the drilled pier length plus 1.5 ft.

PROJECT NO. B-5831
SURRY/YADKIN COUNTY
STATION: 32+28.00 -L-

SHEET 6 OF 8

NORTH CAROLINA PROFESSIONAL SEAL 20125 ENGINEER MARSHALL G. CHECK, JR.
Marshall G. Check, Jr.
5FBCC2F3A4DC413...
9/23/2025

DOCUMENT NOT CONSIDERED FINAL UNLESS ALL SIGNATURES COMPLETED

TGS ENGINEERS
706 HILLSBOROUGH STREET
SUITE 200
RALEIGH, NC 27603
PH (919) 773-8887
CORP. LICENSE NO.: C-0275

STATE OF NORTH CAROLINA
DEPARTMENT OF TRANSPORTATION
RALEIGH

PILE AND DRILLED PIER FOUNDATION TABLES

REVISIONS						SHEET NO.
NO.	BY:	DATE:	NO.	BY:	DATE:	S-6
1			3			TOTAL SHEETS
2			4			61

BENCHMARK #2: BOLT IN BRIDGE WINGWALL, 43.6 FT LEFT OF STA. 35+97.00 -L-, ELEV. 926.75

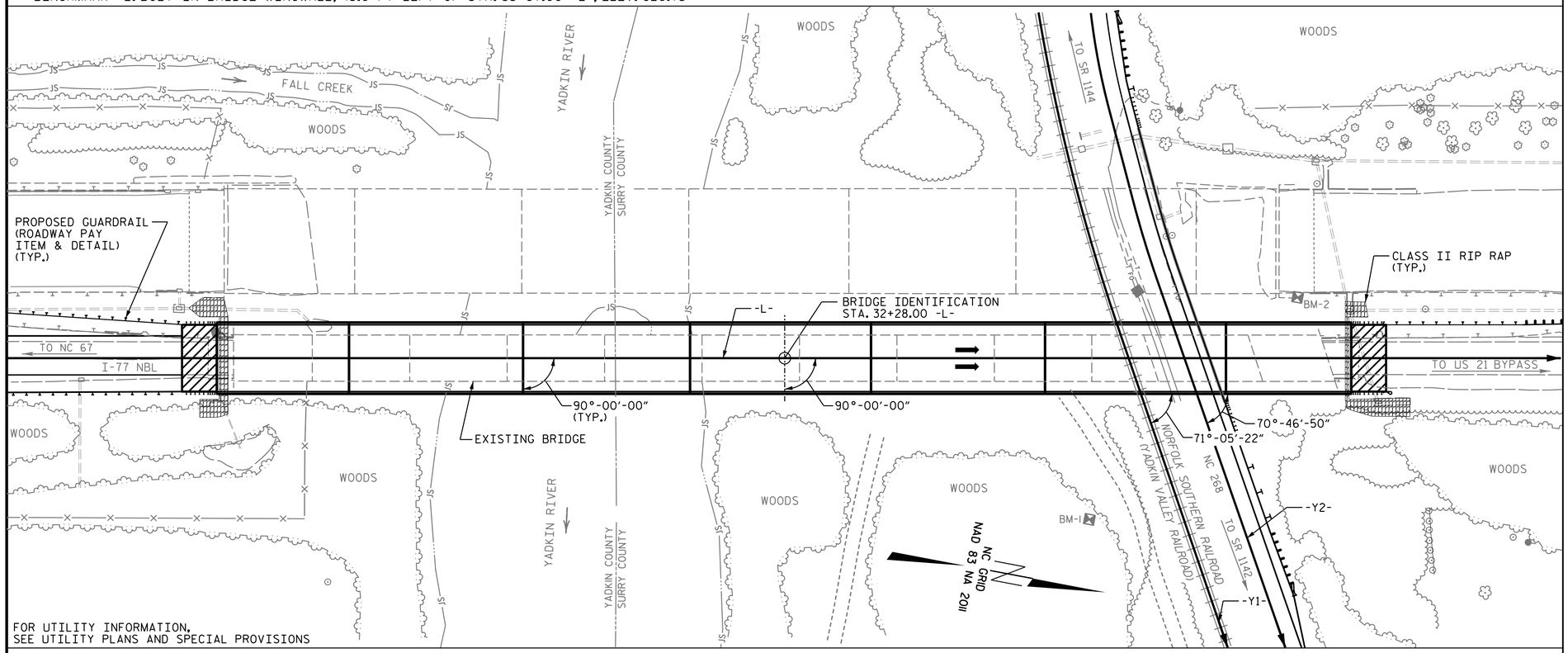

LOCATION SKETCH

SAMPLE BAR REPLACEMENT

SIZE	LENGTH	SIZE	LENGTH
#3	6'-2"	#8	12'-0"
#4	7'-4"	#9	13'-2"
#5	8'-6"	#10	14'-6"
#6	9'-8"	#11	15'-10"
#7	10'-10"		

NOTE:
SAMPLE BAR REPLACEMENT LENGTHS BASED ON 30" (SAMPLE LENGTH) PLUS TWO SPLICE LENGTHS AND f_y = 60ksi.

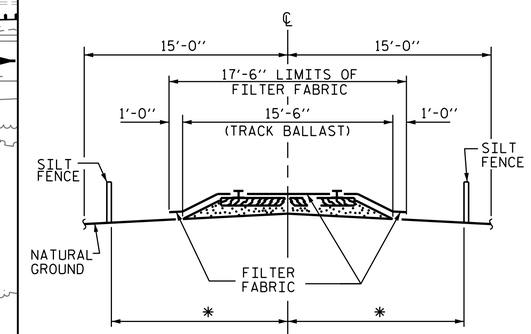

RAILROAD EROSION CONTROL DETAIL

* TO BE DETERMINED BY THE RESIDENT ENGINEER IN CONSULTATION WITH THE RAILROAD ENGINEER.

RAILROAD EROSION CONTROL MEASURES SHALL BE INSTALLED PRIOR TO PERFORMING ANY WORK IN THE RAILROAD RIGHT-OF-WAY.

ADDITIONAL EROSION CONTROL MEASURES FOR PROTECTION OF RAILROAD DITCHES MAY BE REQUIRED AS DIRECTED BY THE ENGINEER.

NO SEPARATE PAYMENT WILL BE MADE FOR RAILROAD EROSION CONTROL MEASURES.

LIMITS OF SILT FENCE AND FILTER FABRIC PARALLEL TO RAILROAD SHALL EXTEND A MINIMUM OF 25'-0" OUTSIDE EDGE OF SUPERSTRUCTURE OR TOE OF SLOPE ON CONSTRUCTION. A GREATER LENGTH OF SILT FENCE OR FILTER FABRIC MAY BE REQUIRED IF SO DIRECTED BY THE ENGINEER.

FILTER FABRIC TO BE NAILED TO TIMBER RAIL TIES WITH PRIME SOURCE "GRIP CAP" OR EQUIVALENT. FILTER FABRIC ON SHOULDER TO BE SECURED AS DIRECTED BY THE ENGINEER AND RAILROAD.

NOTES

ASSUMED LIVE LOAD = HL-93 OR ALTERNATE LOADING.

THIS BRIDGE HAS BEEN DESIGNED IN ACCORDANCE WITH THE AASHTO LRFD BRIDGE DESIGN SPECIFICATIONS.

THIS BRIDGE IS LOCATED IN SEISMIC ZONE 1.

FOR OTHER DESIGN DATA AND GENERAL NOTES, SEE SHEET SN.

FOR SUBMITTAL OF WORKING DRAWINGS, SEE SPECIAL PROVISIONS.

FOR FALSEWORK AND FORMWORK, SEE SPECIAL PROVISIONS.

FOR CRANE SAFETY, SEE SPECIAL PROVISIONS.

FOR GROUT FOR STRUCTURES, SEE SPECIAL PROVISIONS.

PRESTRESSED CONCRETE DECK PANELS MAY BE USED IN LIEU OF METAL STAY-IN-PLACE FORMS IN ACCORDANCE WITH ARTICLE 420-3 OF THE STANDARD SPECIFICATIONS.

REMOVABLE FORMS MAY BE USED IN LIEU OF METAL STAY-IN-PLACE FORMS IN ACCORDANCE WITH ARTICLE 420-3 OF THE STANDARD SPECIFICATIONS.

NEEDLE BEAMS WILL NOT BE ALLOWED UNLESS OTHERWISE CALLED FOR ON THE PLANS OR APPROVED BY THE ENGINEER.

THE CONTRACTOR WILL BE REQUIRED TO CONSTRUCT, MAINTAIN AND AFTERWARDS REMOVE A TEMPORARY ACCESS FOR USE DURING CONSTRUCTION OF THE PROPOSED STRUCTURE. FOR CONSTRUCTION, MAINTENANCE AND REMOVAL OF TEMPORARY ACCESS, SEE SPECIAL PROVISIONS.

REMOVAL OF THE EXISTING BRIDGE SHALL BE PERFORMED IN A MANNER THAT PREVENTS DEBRIS FROM FALLING INTO THE WATER. THE CONTRACTOR SHALL SUBMIT DEMOLITION PLANS FOR REVIEW AND REMOVE THE BRIDGE IN ACCORDANCE WITH ARTICLE 402-2 OF THE STANDARD SPECIFICATIONS.

AT THE CONTRACTOR'S OPTION, AND UPON REMOVAL OF THE CAUSEWAY, THE CLASS II RIP RAP USED IN THE CAUSEWAY MAY BE PLACED AS RIP RAP SLOPE PROTECTION. SEE SPECIAL PROVISIONS FOR CONSTRUCTION, MAINTENANCE AND REMOVAL OF TEMPORARY ACCESS AT STATION 32+28.00 -L-.

INASMUCH AS THE PAINT SYSTEM ON THE EXISTING STRUCTURAL STEEL CONTAINS LEAD, THE CONTRACTOR'S ATTENTION IS DIRECTED TO ARTICLE 107-1 OF THE STANDARD SPECIFICATIONS. ANY COSTS RESULTING FROM COMPLIANCE WITH APPLICABLE STATE OR FEDERAL REGULATIONS PERTAINING TO HANDLING OF MATERIALS CONTAINING LEAD BASED PAINT SHALL BE INCLUDED IN THE BID PRICE FOR "REMOVAL OF EXISTING STRUCTURE."

THE CLASS AA CONCRETE IN THE BRIDGE DECK SHALL CONTAIN FLY ASH OR GROUND GRANULATED BLAST FURNACE SLAG AT THE SUBSTITUTION RATE SPECIFIED IN ARTICLE 1024-1 AND IN ACCORDANCE WITH ARTICLES 1024-5 AND 1024-6 OF THE STANDARD SPECIFICATIONS. NO PAYMENT WILL BE MADE FOR THIS SUBSTITUTION AS IT IS CONSIDERED INCIDENTAL TO THE COST OF THE REINFORCED CONCRETE DECK SLAB.

THE EXISTING STRUCTURE CONSISTING OF 12 SPANS (1 @ 57'-6", 8 @ 70'-0", 1 @ 42'-6", 1 @ 75'-0", 1 @ 53'-0") WITH A REINFORCED CONCRETE DECK ON I-BEAMS WITH A CLEAR ROADWAY WIDTH OF 28'-3" AND A SUBSTRUCTURE CONSISTING OF REINFORCED CONCRETE CAPS/STEEL PILES ABUTMENTS AND REINFORCED CONCRETE POST-AND-BEAM BENTS ON PILE FOOTINGS AND LOCATED AT THE PROPOSED BRIDGE SHALL BE REMOVED. THE EXISTING BRIDGE IS PRESENTLY NOT POSTED FOR LOAD LIMIT. SHOULD THE STRUCTURAL INTEGRITY OF THE BRIDGE DETERIORATE DURING CONSTRUCTION OF THE PROPOSED BRIDGE, A LOAD LIMIT MAY BE POSTED AND MAY BE REDUCED AS FOUND NECESSARY DURING THE LIFE OF THE PROJECT. FOR REMOVAL OF EXISTING STRUCTURE, SEE SPECIAL PROVISIONS.

THE SUBSTRUCTURE OF THE EXISTING BRIDGE INDICATED ON THE PLANS IS FROM THE BEST INFORMATION AVAILABLE. THIS INFORMATION IS SHOWN FOR THE CONVENIENCE OF THE CONTRACTOR. THE CONTRACTOR SHALL HAVE NO CLAIM WHATSOEVER AGAINST THE DEPARTMENT OF TRANSPORTATION FOR ANY DELAYS OR ADDITIONAL COST INCURRED BASED ON DIFFERENCES BETWEEN THE EXISTING BRIDGE SUBSTRUCTURE SHOWN ON THE PLANS AND THE ACTUAL CONDITIONS AT THE PROJECT SITE.

THIS STRUCTURE HAS BEEN DESIGNED IN ACCORDANCE WITH "HEC 18-EVALUATING SCOUR AT BRIDGES."

FOR EROSION CONTROL MEASURES, SEE EROSION CONTROL PLANS.

FOR ASBESTOS ASSESSMENT, SEE SPECIAL PROVISIONS.

FOR LIMITS OF TEMPORARY SHORING FOR MAINTENANCE OF TRAFFIC, SEE TRAFFIC CONTROL PLANS. FOR PAY ITEM FOR TEMPORARY SHORING FOR MAINTENANCE OF TRAFFIC, SEE ROADWAY PLANS.

FOR MAINTENANCE AND PROTECTION OF TRAFFIC BENEATH THE PROPOSED STRUCTURE AT STA. 32+28.00 -L-, SEE SPECIAL PROVISIONS.

THE ELEVATIONS AND CLEARANCES SHOWN ON THE PLANS AT THE POINT OF MINIMUM VERTICAL CLEARANCES ARE FROM THE BEST INFORMATION AVAILABLE. PRIOR TO BEGINING BRIDGE CONSTRUCTION, VERIFY THE ELEVATION ON THE EXISTING PAVEMENT AND CHECK THE CLEARANCE. REPORT ANY VARIATIONS TO THE ENGINEER. ANY PLAN REVISIONS NECESSARY TO ACHIEVE THE REQUIRED MINIMUM VERTICAL CLEARANCE WILL BE PROVIDED BY THE DEPARTMENT.

THE RAILROAD TRACK TOP OF RAIL ELEVATIONS ON THE PLANS ARE FROM THE BEST INFORMATION AVAILABLE. PRIOR TO BEGINNING BRIDGE CONSTRCTION, VERIFY THE TOP OF RAIL ELEVATIONS AND REPORT ANY VARIATIONS TO THE ENGINEER. ANY PLAN REVISIONS NECESSARY TO ACHIEVE THE REQUIRED MINIMUM CLEARANCE WILL BE PROVIDED BY THE DEPARTMENT.

THE MATERIAL SHOWN IN THE CROSS-HATCHED AREA (SEE SHEETS 1 & 3 OF 8) SHALL BE EXCAVATED FOR A DISTANCE OF 40 FT EACH SIDE OF CENTERLINE ROADWAY AT END BENT 1 AND 40 FT LEFT & 100 FT RIGHT OF CENTERLINE ROADWAY AT END BENT 2 AS DIRECTED BY THE ENGINEER. THIS WORK WILL BE PAID FOR AT THE CONTRACT LUMP SUM PRICE FOR UNCLASSIFIED STRUCTURE EXCAVATION. SEE SECTION 412 OF THE STANDARD SPECIFICATIONS.

THE CONTRACTOR SHALL PROVIDE INDEPENDENT ASSURANCE SAMPLES OF REINFORCING STEEL AS FOLLOWS: FOR PROJECTS REQUIRING UP TO 400 TONS OF REINFORCING STEEL, ONE 30 INCH SAMPLE OF EACH SIZE BAR USED, AND FOR PROJECTS REQUIRING OVER 400 TONS OF REINFORCING, TWO 30 INCH SAMPLES OF EACH SIZE BAR USED. THE SAMPLE BARS SHOULD COME FROM STEEL ACTUALLY USED IN THE PROJECT AND THE SAMPLE BARS SHOULD BE REPLACED BY SPLICED BARS AS SPECIFIED IN THE SAMPLE BAR REPLACEMENT CHART. PAYMENT FOR THE SAMPLE BARS AND REPLACEMENT REINFORCING STEEL SHALL BE CONSIDERED INCIDENTAL TO VARIOUS PAY ITEMS.

FOR SECURING FOR VESSELS, SEE SPECIAL PROVISIONS.

PROJECT NO. B-5831
SURRY/YADKIN COUNTY
STATION: 32+28.00 -L-

SHEET 7 OF 8

NORTH CAROLINA PROFESSIONAL SEAL 20125 ENGINEER
MARSHALL G. CHEEK, JR.
Marshall G. Cheek, Jr.
9/23/2025

DOCUMENT NOT CONSIDERED FINAL UNLESS ALL SIGNATURES COMPLETED

TGS ENGINEERS
706 HILLSBOROUGH STREET
SUITE 200
RALEIGH, NC 27603
PH (919) 773-8887
CORP. LICENSE NO.: C-0275

STATE OF NORTH CAROLINA
DEPARTMENT OF TRANSPORTATION
RALEIGH

GENERAL DRAWING
BRIDGE OVER YADKIN RIVER, NORFOLK SOUTHERN RR, AND NC 268 ON I-77 NBL BETWEEN NC 268 AND NC 67

REVISIONS						
NO.	BY:	DATE:	NO.	BY:	DATE:	
1			3			
2			4			

SHEET NO. S-7
TOTAL SHEETS 61

DRAWN BY : ZCS DATE : 5/24
CHECKED BY : MGC DATE : 7/24

12/19/2024
c:\workdir\ncdot-pw.bentley.com.ncdot-pw-01\zachary smith\d0166590\GeneralDrawing.dgn
ZSmith

TOTAL BILL OF MATERIAL

ITEM	CONSTRUCTION, MAINTENANCE, AND REMOVAL OF TEMPORARY ACCESS	REMOVAL OF EXISTING STRUCTURE	ASBESTOS ASSESSMENT	5'-0" Ø DRILLED PIERS	PERMANENT STEEL CASING FOR 5'-0" Ø DRILLED PIERS	SID INSPECTIONS	CSL TESTING	UNCLASSIFIED STRUCTURE EXCAVATION	REINFORCED CONCRETE DECK SLAB	GROOVING BRIDGE FLOORS	CLASS A CONCRETE	BRIDGE APPROACH SLABS	REINFORCING STEEL	SPIRAL COLUMN REINFORCING STEEL	FIB 63" PRESTRESSED CONCRETE GIRDERS	
	LUMP SUM	LUMP SUM	LUMP SUM	LIN. FT.	LIN. FT.	EACH	EACH	LUMP SUM	SQ. FT.	SQ. FT.	C.Y.	LUMP SUM	LBS.	LBS.	NO.	LIN. FT.
SUPERSTRUCTURE									41,660	38,620					42	4,851.00
END BENT 1								LUMP SUM			50.4		8,120			
BENT 1				153.61		3	3				94.5		25,922	7,446		
BENT 2				86.52	35.52	3	3				119.5		23,331	6,755		
BENT 3				86.37	35.37	3	3				122.8		23,721	6,937		
BENT 4				127.26		3	3				108.8		25,005	7,441		
BENT 5				114.20		3	3				105.4		23,591	6,814		
BENT 6				160.09		3	3				75.8		24,106	6,541		
END BENT 2								LUMP SUM			50.5		8,127			
TOTAL	LUMP SUM	LUMP SUM	LUMP SUM	728.05	70.89	18	18	LUMP SUM	41,660	38,620	727.7	LUMP SUM	161,923	41,934	42	4,851.00

TOTAL BILL OF MATERIAL

ITEM	PILE DRIVING EQUIPMENT SETUP FOR HP 12x53 STEEL PILES	HP 12x53 STEEL PILES		CONCRETE BARRIER RAIL	RIP RAP CLASS II (2'-0" THK.)	GEOTEXTILE FOR DRAINAGE	ELASTOMERIC BEARINGS	EXPANSION JOINT SEALS
	EACH	NO.	LIN. FT.	LIN. FT.	TONS	SQ. YDS.	LUMP SUM	LUMP SUM
SUPERSTRUCTURE				1,665.78			LUMP SUM	LUMP SUM
END BENT 1	11	11	550		230	255		
BENT 1								
BENT 2								
BENT 3								
BENT 4								
BENT 5								
BENT 6								
END BENT 2	11	11	275		235	260		
TOTAL	22	22	825	1,665.78	465	515	LUMP SUM	LUMP SUM

PROJECT NO. B-5831

SURRY/YADKIN COUNTY

STATION: 32+28.00 -L-

SHEET 8 OF 8

NORTH CAROLINA PROFESSIONAL SEAL 20125 ENGINEER MARSHALL G. CHEEK, JR.

SIGNED BY: Marshall G. Cheek, Jr.

5FBCC2F3A4DC413...

9/23/2025

DOCUMENT NOT CONSIDERED FINAL UNLESS ALL SIGNATURES COMPLETED

TGS ENGINEERS
706 HILLSBOROUGH STREET
SUITE 200
RALEIGH, NC 27603
PH (919) 773-8887
CORP. LICENSE NO.: C-0275

STATE OF NORTH CAROLINA
DEPARTMENT OF TRANSPORTATION
RALEIGH

GENERAL DRAWING

FOR BRIDGE OVER YADKIN RIVER, NORFOLK SOUTHERN RR, AND NC 268 ON I-77 NBL BETWEEN NC 268 AND NC 67

REVISIONS						SHEET NO.
NO.	BY:	DATE:	NO.	BY:	DATE:	S-8
1			3			TOTAL SHEETS
2			4			61

DRAWN BY : ZCS DATE : 5/24

CHECKED BY : MGC DATE : 7/24

$$$$$$$SYSTIME$$$$$
$$$$$$$$$$$$$$$$$$$$$$$$DGN$$$$$$$$$$$$$$$$$$$$$$$$
$$$$USERNAME$$$$

LOAD AND RESISTANCE FACTOR RATING (LRFR) SUMMARY FOR PRESTRESSED CONCRETE GIRDERS

LEVEL		VEHICLE	WEIGHT (W) (TONS)	CONTROLLING LOAD RATING (#)	MINIMUM RATING FACTORS (RF)	TONS = W × RF	STRENGTH I LIMIT STATE											SERVICE III LIMIT STATE						COMMENT NUMBER
							LIVE-LOAD FACTORS (γ_{LL})	MOMENT					SHEAR					LIVE-LOAD FACTORS (γ_{LL})	MOMENT					
								DISTRIBUTION FACTORS (DF)	RATING FACTOR	SPAN	GIRDER LOCATION	DISTANCE FROM LEFT END OF SPAN (ft)	DISTRIBUTION FACTORS (DF)	RATING FACTOR	SPAN	GIRDER LOCATION	DISTANCE FROM LEFT END OF SPAN (ft)		DISTRIBUTION FACTORS (DF)	RATING FACTOR	SPAN	GIRDER LOCATION	DISTANCE FROM LEFT END OF SPAN (ft)	
DESIGN LOAD RATING		HL-93 (INVENTORY)	N/A	1	1.10	--	1.75	0.856	1.27	A	EL	45.96	0.909	1.37	F	EL	128.00	0.80	0.856	1.10	A	EL	45.96	1
		HL-93 (OPERATING)	N/A		1.64	--	1.35	0.856	1.64	A	EL	45.96	0.909	1.77	F	EL	128.00	N/A	--	--	--	--	--	1
		HS-20 (INVENTORY)	36.000	2	1.52	54.72	1.75	0.856	1.75	A	EL	45.96	0.909	2.01	F	EL	128.00	0.80	0.856	1.52	A	EL	45.96	1
		HS-20 (OPERATING)	36.000		2.27	81.72	1.35	0.856	2.27	A	EL	45.96	0.909	2.60	F	EL	128.00	N/A	--	--	--	--	--	1
LEGAL LOAD	SINGLE VEHICLE (SV)	SH	12.500		3.92	49.00	1.40	0.856	5.62	A	EL	45.96	0.909	6.86	F	EL	128.00	0.80	0.856	3.92	A	EL	45.96	1
		S3C	21.500		2.28	49.02	1.40	0.856	3.27	A	EL	45.96	0.909	4.00	F	EL	128.00	0.80	0.856	2.28	A	EL	45.96	1
		S3A	22.750		2.16	49.14	1.40	0.856	3.09	A	EL	45.96	0.909	3.79	F	EL	128.00	0.80	0.856	2.16	A	EL	45.96	1
		S4A	26.750		1.90	50.83	1.40	0.856	2.72	A	EL	45.96	0.909	3.26	F	EL	128.00	0.80	0.856	1.90	A	EL	45.96	1
		S5A	30.500		1.67	50.94	1.40	0.856	2.40	A	EL	45.96	0.909	2.93	F	EL	128.00	0.80	0.856	1.67	A	EL	45.96	1
		S6A	34.500		1.51	52.10	1.40	0.856	2.17	A	EL	45.96	0.909	2.62	F	EL	128.00	0.80	0.856	1.51	A	EL	45.96	1
		S7B	38.500		1.37	52.75	1.40	0.856	1.97	A	EL	45.96	0.909	2.40	F	EL	128.00	0.80	0.856	1.37	A	EL	45.96	1
		S7A	40.000	3	1.35	54.00	1.40	0.856	1.94	A	EL	45.96	0.909	2.38	F	EL	128.00	0.80	0.856	1.35	A	EL	45.96	1
	TRUCK TRACTOR SEMI-TRAILER (TTST)	T4A	28.250		1.86	52.55	1.40	0.856	2.67	A	EL	45.96	0.909	3.13	F	EL	128.00	0.80	0.856	1.86	A	EL	45.96	1
		T5B	32.000		1.63	52.16	1.40	0.856	2.34	A	EL	45.96	0.909	2.88	F	EL	128.00	0.80	0.856	1.63	A	EL	45.96	1
		T6A	36.000		1.49	53.64	1.40	0.856	2.14	A	EL	45.96	0.909	2.61	F	EL	128.00	0.80	0.856	1.49	A	EL	45.96	1
		T7A	40.000		1.38	55.20	1.40	0.856	1.98	A	EL	45.96	0.909	2.38	F	EL	128.00	0.80	0.856	1.38	A	EL	45.96	1
		T7B	40.000		1.46	58.40	1.40	0.856	2.10	A	EL	45.96	0.909	2.31	F	EL	128.00	0.80	0.856	1.46	A	EL	45.96	1
EMERGENCY VEHICLE (EV)		EV2	28.750		1.84	52.90	1.30	0.856	2.84	A	EL	45.96	0.909	3.30	F	EL	128.00	0.80	0.856	1.84	A	EL	45.96	1
		EV3	43.000	3	1.21	52.03	1.30	0.856	1.87	A	EL	45.96	0.909	2.21	F	EL	128.00	0.80	0.856	1.21	A	EL	45.96	1

LOAD FACTORS:

DESIGN LOAD RATING FACTORS	LIMIT STATE	γ_{DC}	γ_{DW}
	STRENGTH I	1.25	1.50
	SERVICE III	1.00	1.00

NOTES:

MINIMUM RATING FACTORS ARE BASED ON THE STRENGTH I AND SERVICE III LIMIT STATES.

ALLOWABLE STRESSES FOR SERVICE III LIMIT STATE ARE AS REQUIRED FOR DESIGN.

COMMENTS:

1. GIRDERS DESIGNED AS SIMPLE SPAN
2.
3.
4.

(#) CONTROLLING LOAD RATING

(1) DESIGN LOAD RATING (HL-93)
(2) DESIGN LOAD RATING (HS-20)
(3) LEGAL LOAD RATING **
(4) EMERGENCY VEHICLE RATING **
** SEE CHART FOR VEHICLE TYPE

GIRDER LOCATION

I - INTERIOR GIRDER
EL - EXTERIOR LEFT GIRDER
ER - EXTERIOR RIGHT GIRDER

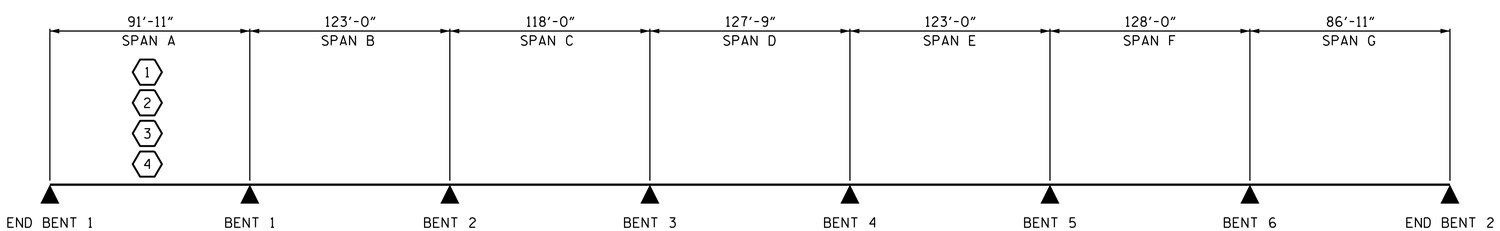

LRFR SUMMARY

DIMENSIONS SHOWN ARE BEARING TO BEARING

PROJECT NO. B-5831
SURRY/YADKIN COUNTY
STATION: 32+28.00 -L-

NORTH CAROLINA PROFESSIONAL SEAL 20125 ENGINEER MARSHALL G. CHEEK, JR.
Marshall G. Cheek, Jr.
5FBCC2F3A4DC413...
9/23/2025

DOCUMENT NOT CONSIDERED FINAL UNLESS ALL SIGNATURES COMPLETED

TGS ENGINEERS
706 HILLSBOROUGH STREET
SUITE 200
RALEIGH, NC 27603
PH (919) 773-8887
CORP. LICENSE NO.: C-0275

STATE OF NORTH CAROLINA
DEPARTMENT OF TRANSPORTATION
RALEIGH

STANDARD
LRFR SUMMARY FOR PRESTRESSED CONCRETE GIRDERS
(INTERSTATE TRAFFIC)

REVISIONS						SHEET NO.
NO.	BY:	DATE:	NO.	BY:	DATE:	S-9
1			3			TOTAL SHEETS
2			4			61

STD. NO. LRFR2

ASSEMBLED BY : STM		DATE : 10/24	
CHECKED BY : MGC		DATE : 12/24	
DRAWN BY : MAA 1/08	REV. 11/12/08RR	MAA/GM	
CHECKED BY : GM/DI 2/08	REV. 10/1/11	MAA/GM	
	REV. 04/23	BNB/AAI	

12/19/2024
c:\workdir\ncdot-pw.bentley.com.ncdot-pw-01\sam massinople\d0166590\B-5831-SMU-G-LRFR-850006.dgn
smassinople

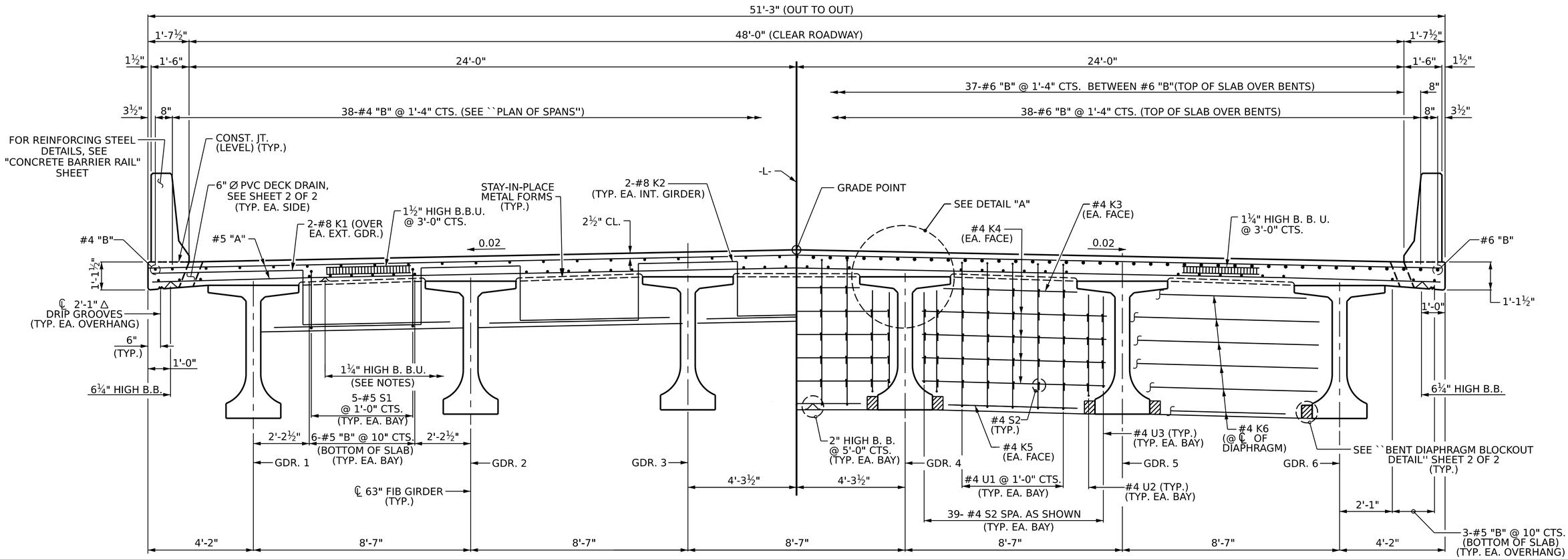

TYPICAL HALF SECTION

SHOWING END BENT, BENT 2 & 5 DIAPHRAGMS

TYPICAL HALF SECTION

SHOWING BENT 1, 3, 4 & 6 DIAPHRAGMS

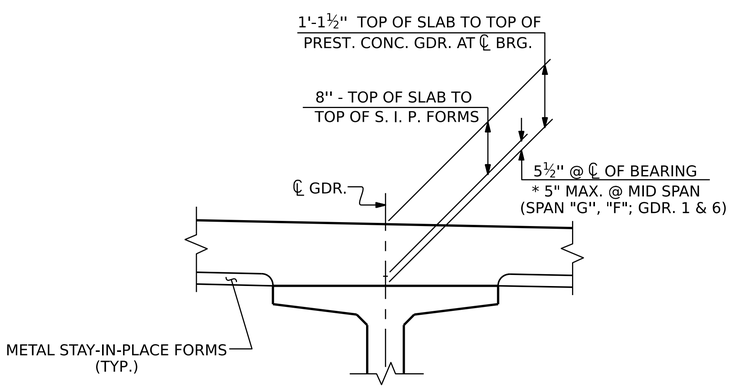

DETAIL "A"

* BASED ON PREDICTED FINAL CAMBER AND THEORETICAL GRADE LINE ELEVATIONS.

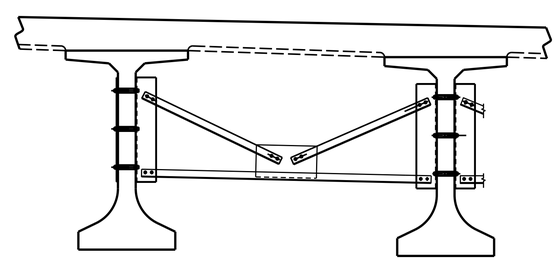

PART SECTION AT INTERMEDIATE DIAPHRAGM

FOR DETAILS, SEE "INTERMEDIATE STEEL DIAPHRAGMS FOR 63" FIB" SHEET

NOTES

PROVIDE 1¼" HIGH BEAM BOLSTERS UPPER AT 4'-0" CTS. ATOP THE METAL STAY-IN-PLACE FORMS TO SUPPORT THE BOTTOM MAT OF 'A' BARS. WHEN USING REMOVABLE FORMS, PROVIDE CONTINUOUS HIGH CHAIRS FOR METAL DECK (C.H.C.M.) @ 4'-0" CTS. WITH A HEIGHT TO SUPPORT THE BOTTOM MAT OF 'A' BARS A CLEAR DISTANCE OF 2½" ABOVE THE TOP OF THE REMOVABLE FORM.

LONGITUDINAL STEEL MAY BE SHIFTED SLIGHTLY, AS NECESSARY, TO AVOID INTERFERENCE WITH STIRRUPS IN PRESTRESSED CONCRETE GIRDERS.

PREVIOUSLY CAST CONCRETE IN A CONTINUOUS UNIT SHALL HAVE ATTAINED A MINIMUM COMPRESSIVE STRENGTH OF 3,000 PSI BEFORE ADDITIONAL CONCRETE IS CAST IN THE UNIT.

BARRIER RAIL IN A CONTINUOUS UNIT SHALL NOT BE CAST UNTIL ALL SLAB CONCRETE IN THE UNIT HAS BEEN CAST AND HAS REACHED A MINIMUM COMPRESSIVE STRENGTH OF 3,000 PSI.

#5 G BAR MAY BE SHIFTED SLIGHTLY AS NECESSARY, TO CLEAR REINFORCING STEEL AND STIRRUPS.

PROJECT NO. B-5831

SURRY/YADKIN COUNTY

STATION: 32+28.00 -L-

SHEET 1 OF 2

NORTH CAROLINA PROFESSIONAL SEAL 20125 ENGINEER MARSHALL G. CHECK, JR.

Marshall G. Check, Jr.

SFBCC2F3A4DC413...

9/23/2025

DOCUMENT NOT CONSIDERED FINAL UNLESS ALL SIGNATURES COMPLETED

TGS ENGINEERS
706 HILLSBOROUGH STREET
SUITE 200
RALEIGH, NC 27603
PH (919) 773-8887
CORP. LICENSE NO.: C-0275

STATE OF NORTH CAROLINA
DEPARTMENT OF TRANSPORTATION
RALEIGH

SUPERSTRUCTURE

TYPICAL SECTIONS

REVISIONS						
NO.	BY:	DATE:	NO.	BY:	DATE:	
1			3			
2			4			

SHEET NO. S-10

TOTAL SHEETS 61

DRAWN BY : S. B. WILLIAMS DATE : 2-24
CHECKED BY : MGC DATE : 8-24
DESIGN ENGINEER OF RECORD: MGC DATE : 12-24

9/18/2025
c:\workdir\ncdot-pw.bentley.com_ncdot-pw-01\zachary smith\d0166590\B-5831-SMU-TS-850006.dgn
ZSmith

8/26/21

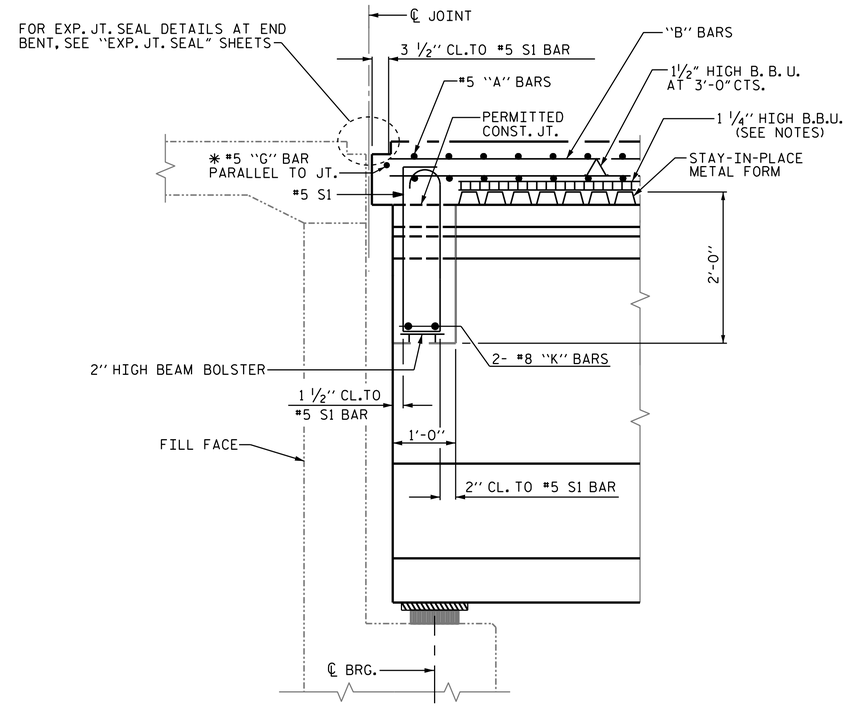

SECTION A-A

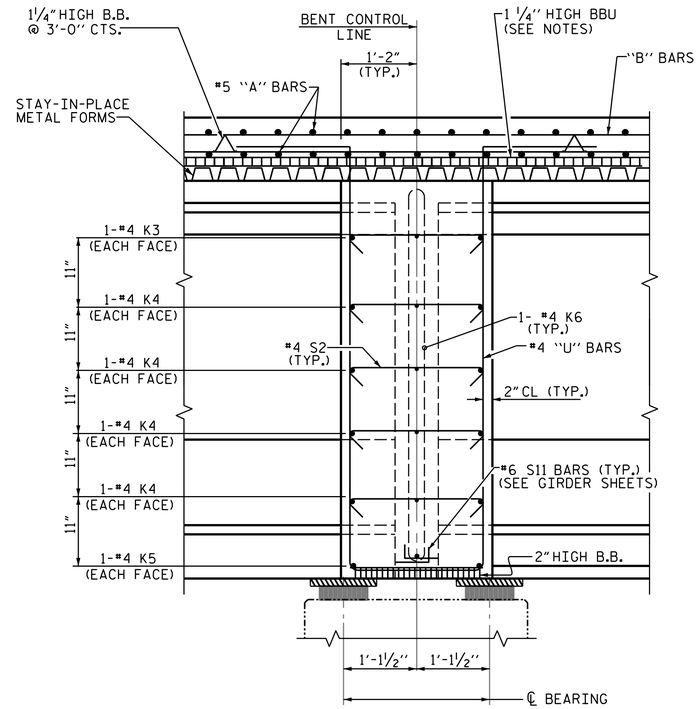

SECTION B-B

(LOCATED @ BENTS 1, 3, 4 & 6)

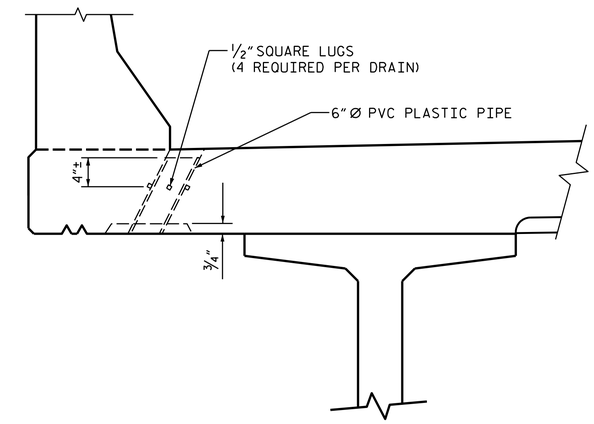

ELEVATION

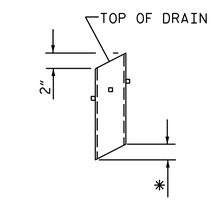

✱ TO BE SET TO MATCH SLOPE OF BOTTOM OF OVERHANG

(70 DRAINS REQUIRED)

PIPE DETAIL

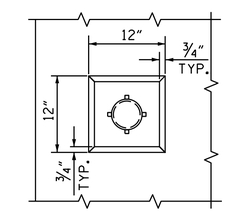

PLAN OF RECESS

NOTES:

TOP OF FLOOR DRAIN TO BE SET 3/8" BELOW SURFACE OF SLAB.

4 - 1/2" SQUARE LUGS TO BE GLUED TO THE PVC PLASTIC PIPE AT EQUAL SPACES AROUND THE PIPE DRAIN APPROXIMATELY 4" FROM THE TOP OF THE PIPE.

THE 6" Ø PVC PLASTIC PIPE AND FITTINGS SHALL BE SCHEDULE 40 AND CONFORM TO ASTM D1785.

DRAIN DETAILS

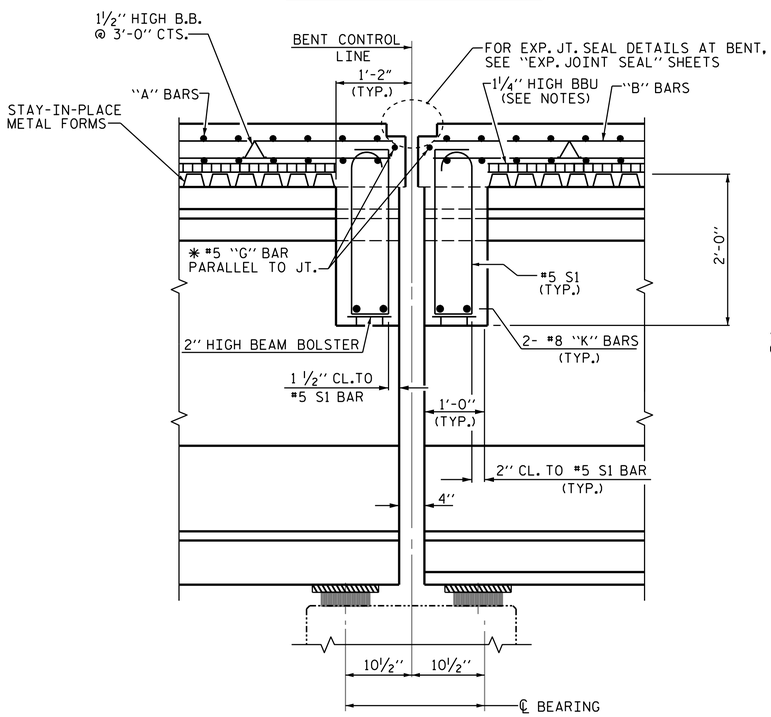

SECTION C-C

(LOCATED @ BENTS 2 & 5)

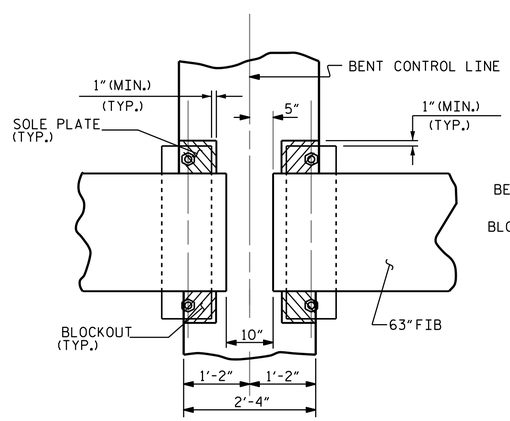

PLAN

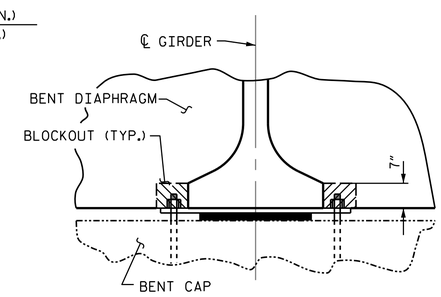

SECTION

BENT DIAPHRAGM BLOCKOUT DETAIL

PROJECT NO. B-5831

SURRY/YADKIN COUNTY

STATION: 32+28.00 -L-

SHEET 2 OF 2

STATE OF NORTH CAROLINA
DEPARTMENT OF TRANSPORTATION
RALEIGH

SUPERSTRUCTURE

TYPICAL SECTION DETAILS

NORTH CAROLINA PROFESSIONAL SEAL 20125 ENGINEER MARSHALL LEE GREEK, JR.

5FBCC2F3A4DC413...

9/23/2025

DOCUMENT NOT CONSIDERED FINAL UNLESS ALL SIGNATURES COMPLETED

TGS ENGINEERS
706 HILLSBOROUGH STREET
SUITE 200
RALEIGH, NC 27603
PH (919) 773-8887
CORP. LICENSE NO.: C-0275

REVISIONS						
NO.	BY:	DATE:	NO.	BY:	DATE:	
1			3			
2			4			

SHEET NO. S-11

TOTAL SHEETS 61

DRAWN BY :	S. B. WILLIAMS	DATE :	2-24
CHECKED BY :	MGC	DATE :	5-24
DESIGN ENGINEER OF RECORD:	MGC	DATE :	8-24

12/19/2024
c:\workdir\ncdot-pw.bentley.com_ncdot-pw-01\zachary smith\d0166590\B-5831-SMU-TS-850006.dgn
ZSmith

8/26/21

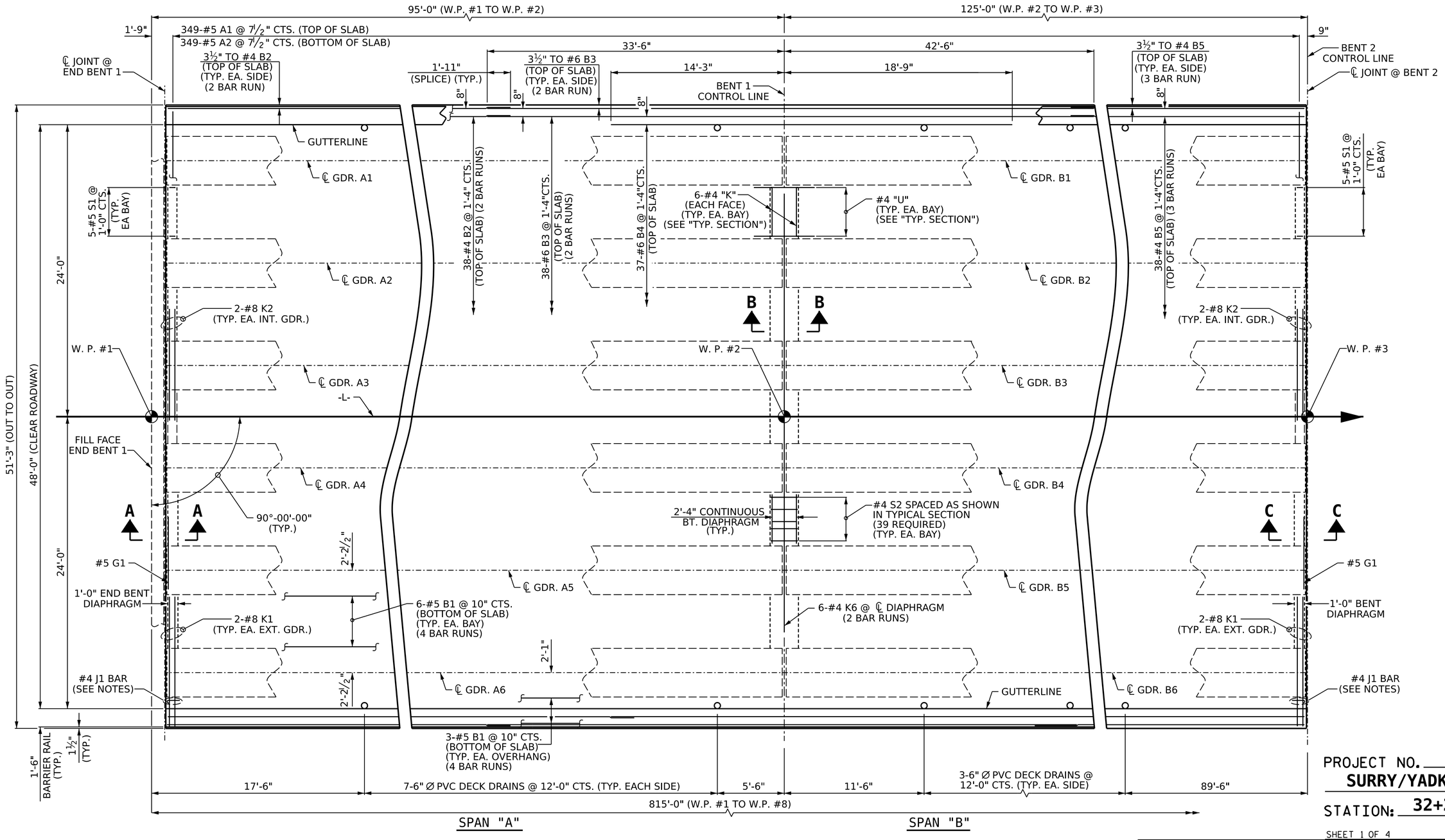

PROJECT NO. B-5831

SURRY/YADKIN COUNTY

STATION: 32+28.00 -L-

SHEET 1 OF 4

PARTIAL PLAN OF SPANS A & B

FOR SECTION A-A ,B-B & C-C, SEE "TYPICAL SECTION DETAILS",SHEET 2 OF 2.

FOR BARRIER RAIL DETAILS AND REINFORCING STEEL, SEE "CONCRETE BARRIER RAIL" SHEETS.

FOR PLACEMENT OF #4 J1 BARS, SEE "EXPANSION JOINT SEAL DETAILS" SHEETS.

NORTH CAROLINA PROFESSIONAL SEAL 20125 ENGINEER MARSHALL L. CREEK, JR.

Marshall L. Creek, Jr.

5FBCC2F3A4DC413...

9/23/2025

DOCUMENT NOT CONSIDERED FINAL UNLESS ALL SIGNATURES COMPLETED

TGS ENGINEERS
706 HILLSBOROUGH STREET
SUITE 200
RALEIGH, NC 27603
PH (919) 773-8887
CORP. LICENSE NO.: C-0275

STATE OF NORTH CAROLINA
DEPARTMENT OF TRANSPORTATION
RALEIGH

SUPERSTRUCTURE

PLAN OF SPAN A-B

REVISIONS						
NO.	BY:	DATE:	NO.	BY:	DATE:	
1			3			
2			4			

SHEET NO. S-12

TOTAL SHEETS 61

DRAWN BY :	S. B. WILLIAMS	DATE :	3-24
CHECKED BY :	MGC	DATE :	8-24
DESIGN ENGINEER OF RECORD:	MGC	DATE :	12-24

9/18/2025
c:\workdir\ncdot-pw.bentley.com_ncdot-pw-01\zachary smith\d0166590\B-5831-SMU-PS-850006.dgn
ZSmith

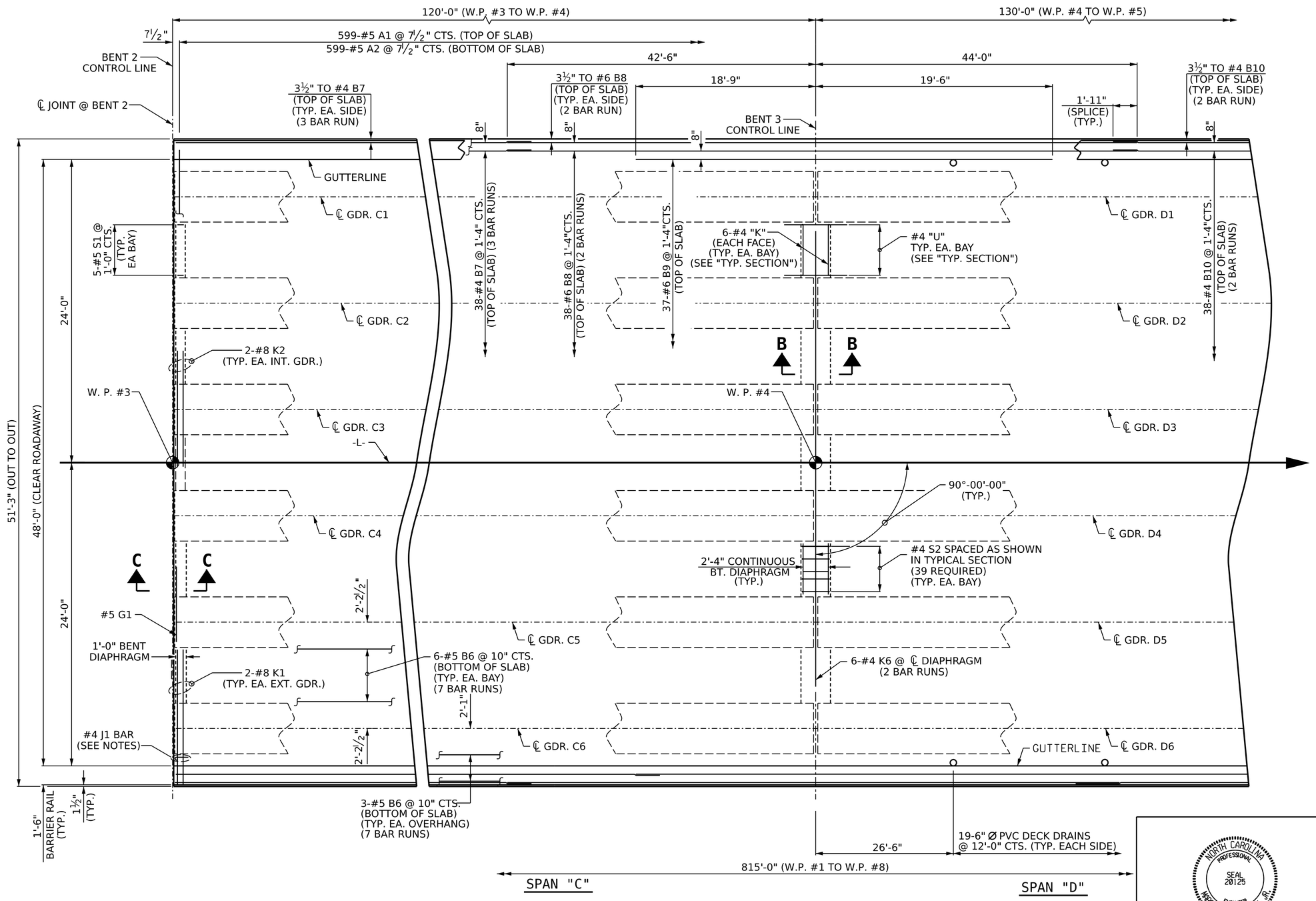

PARTIAL PLAN OF SPANS C & D

FOR SECTION B-B AND C-C, SEE "TYPICAL SECTION DETAILS",SHEET 2 OF 2.

FOR BARRIER RAIL DETAILS AND REINFORCING STEEL, SEE "CONCRETE BARRIER RAIL" SHEETS.

FOR PLACEMENT OF #4 J1 BARS, SEE "EXPANSION JOINT SEAL DETAILS" SHEETS.

PROJECT NO. B-5831
SURRY/YADKIN COUNTY
STATION: 32+28.00 -L-

SHEET 2 OF 4

STATE OF NORTH CAROLINA
DEPARTMENT OF TRANSPORTATION
RALEIGH

SUPERSTRUCTURE

PLAN OF SPAN C-D

NORTH CAROLINA PROFESSIONAL SEAL 20125 ENGINEER MARSHALL G. CREEK, JR.
Marshall G. Creek, Jr.
5FBCC2F3A4DC413...
9/23/2025

DOCUMENT NOT CONSIDERED FINAL UNLESS ALL SIGNATURES COMPLETED

TGS ENGINEERS
706 HILLSBOROUGH STREET
SUITE 200
RALEIGH, NC 27603
PH (919) 773-8887
CORP. LICENSE NO.: C-0275

REVISIONS						
NO.	BY:	DATE:	NO.	BY:	DATE:	
1			3			
2			4			

SHEET NO. S-13
TOTAL SHEETS 61

DRAWN BY :	S. B. WILLIAMS	DATE :	3-24
CHECKED BY :	MGC	DATE :	8-24
DESIGN ENGINEER OF RECORD:	MGC	DATE :	12-24

9/18/2025
c:\workdir\ncdot-pw.bentley.com_ncdot-pw-01\zachary smith\d0166590\B-5831-SMU-PS-850006.dgn
ZSmith

8/26/21

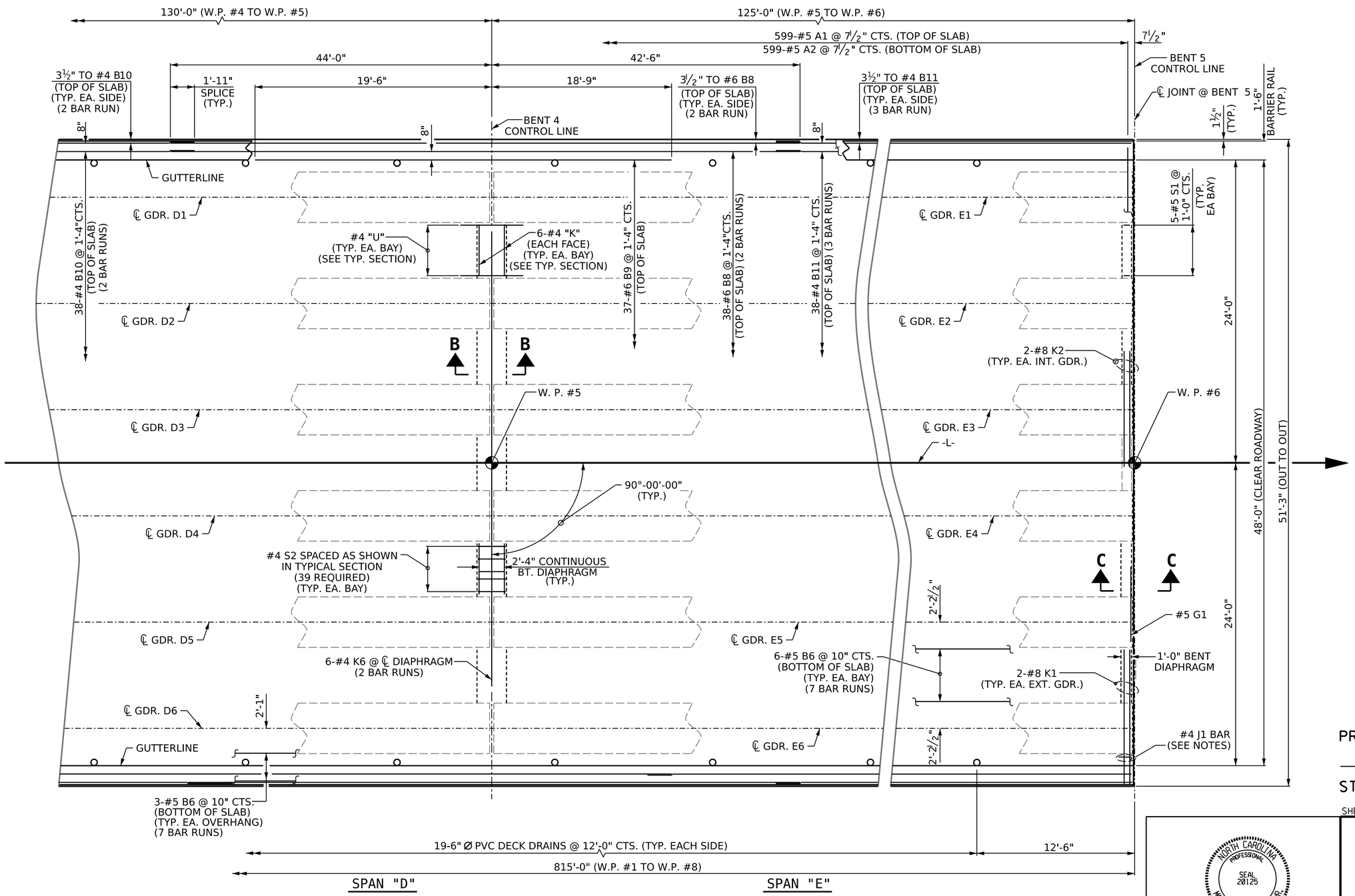

PARTIAL PLAN OF SPANS D & E

FOR SECTION B-B AND C-C, SEE "TYPICAL SECTION DETAILS",SHEET 2 OF 2.

FOR BARRIER RAIL DETAILS AND REINFORCING STEEL, SEE "CONCRETE BARRIER RAIL" SHEETS.

FOR PLACEMENT OF #4 J1 BARS, SEE "EXPANSION JOINT DETAILS" SHEETS.

PROJECT NO. B-5831
SURRY/YADKIN COUNTY
STATION: 32+28.00 -L-

SHEET 3 OF 4

NORTH CAROLINA PROFESSIONAL SEAL 20125 ENGINEER MARSHALL G. CHEEK, JR.
SFBCCCP3A4DC413...
9/23/2025

DOCUMENT NOT CONSIDERED FINAL UNLESS ALL SIGNATURES COMPLETED

TGS ENGINEERS
706 HILLSBOROUGH STREET
SUITE 200
RALEIGH, NC 27603
PH (919) 773-8887
CORP. LICENSE NO.: C-0275

STATE OF NORTH CAROLINA
DEPARTMENT OF TRANSPORTATION
RALEIGH

SUPERSTRUCTURE

PLAN OF SPAN D-E

REVISIONS									SHEET NO.
NO.	BY:	DATE:	NO.	BY:	DATE:				S-14
1			3						TOTAL SHEETS
2			4						61

DRAWN BY :	S. B. WILLIAMS	DATE :	3-24
CHECKED BY :	MGC	DATE :	5-24
DESIGN ENGINEER OF RECORD:	MGC	DATE :	12-24

9/18/2025
c:\workdir\ncdot-pw.bentley.com_ncdot-pw-01\zachary smith\d0166590\B-5831-SMU-PS-850006.dgn
ZSmith

8/26/21

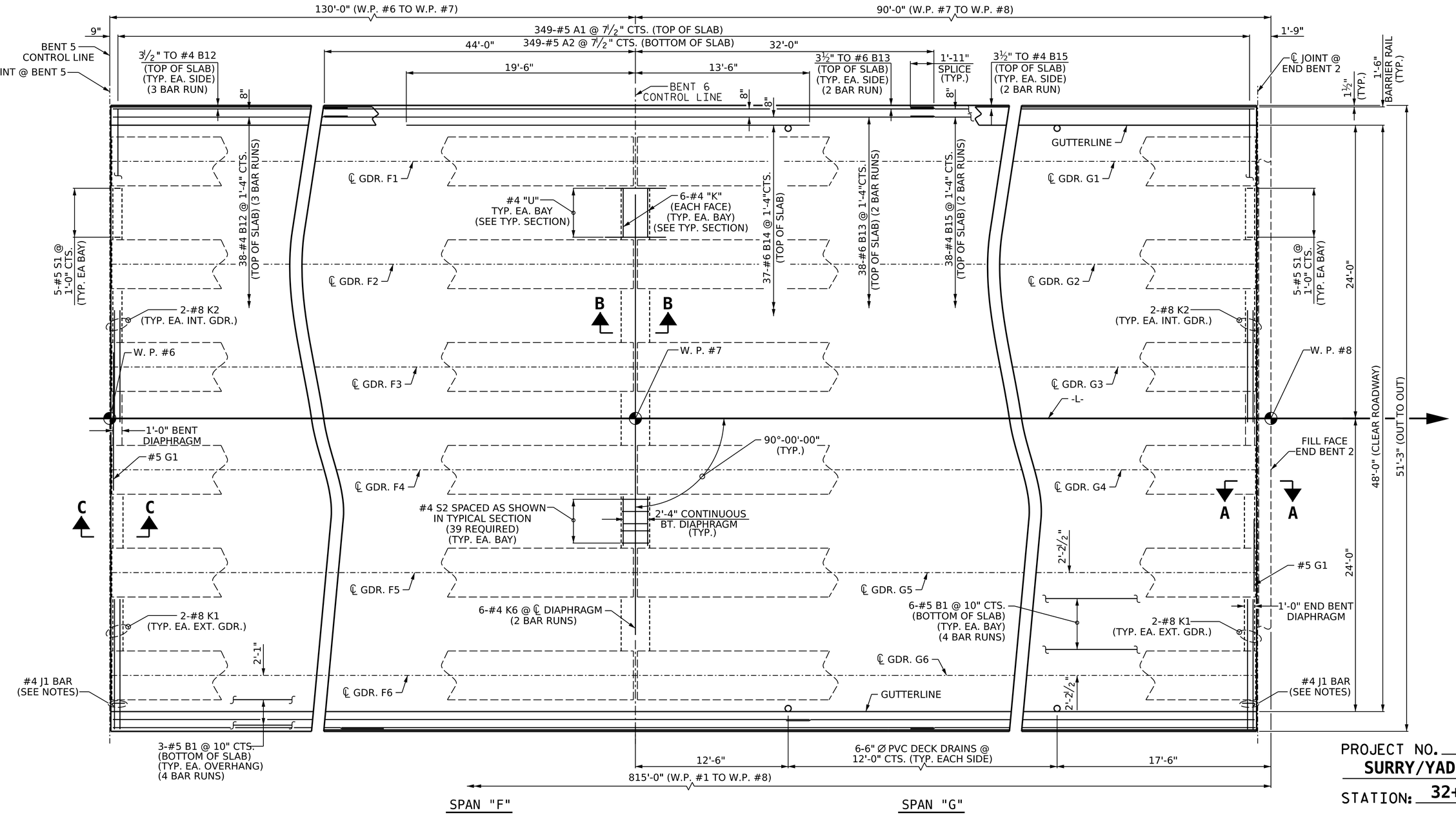

PROJECT NO. B-5831
SURRY/YADKIN COUNTY
STATION: 32+28.00 -L-

SHEET 4 OF 4

PARTIAL PLAN OF SPANS F & G

FOR SECTION A-A, B-B & CC SEE "TYPICAL SECTION DETAILS", SHEET 2 OF 2.

FOR BARRIER RAIL DETAILS AND REINFORCING STEEL, SEE "CONCRETE BARRIER RAIL" SHEETS.

FOR PLACEMENT OF #4 J1 BARS, SEE "EXPANSION JOINT DETAILS" SHEETS.

NORTH CAROLINA PROFESSIONAL SEAL 20125 ENGINEER MARSHALL G. CHEEK, JR.

Marshall G. Cheek, Jr.
5FBCC2F3A4DC413...

9/23/2025

DOCUMENT NOT CONSIDERED FINAL UNLESS ALL SIGNATURES COMPLETED

TGS ENGINEERS
706 HILLSBOROUGH STREET
SUITE 200
RALEIGH, NC 27603
PH (919) 773-8887
CORP. LICENSE NO.: C-0275

STATE OF NORTH CAROLINA
DEPARTMENT OF TRANSPORTATION
RALEIGH

SUPERSTRUCTURE

PLAN OF SPAN F-G

REVISIONS							
NO.	BY:	DATE:	NO.	BY:	DATE:		
1			3				
2			4				

SHEET NO. S-15
TOTAL SHEETS 61

DRAWN BY :	S. B. WILLIAMS	DATE :	3-24
CHECKED BY :	MGC	DATE :	8-24
DESIGN ENGINEER OF RECORD:	MGC	DATE :	12-24

9/18/2025
c:\workdir\ncdot-pw.bentley.com_ncdot-pw-01\zachary smith\d0166590\B-5831-SMU-PS-850006.dgn
ZSmith

8/26/21

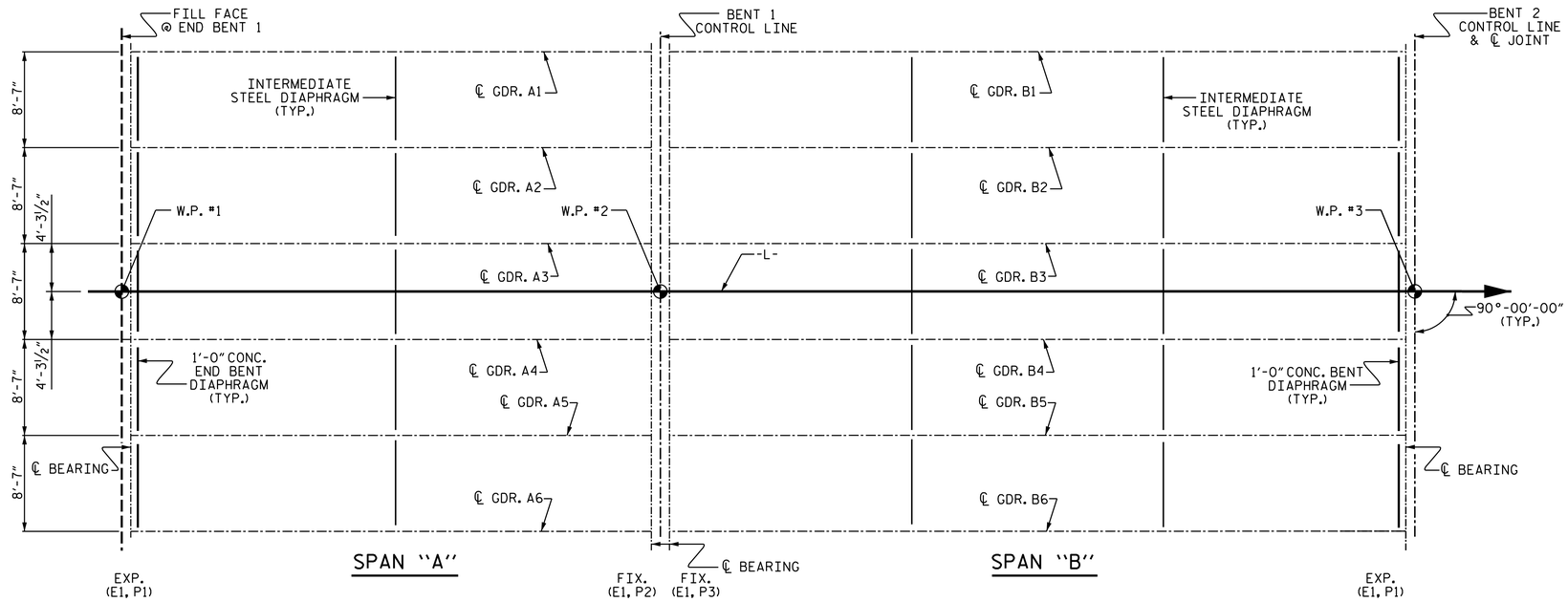

SPANS "A-B" FRAMING PLAN

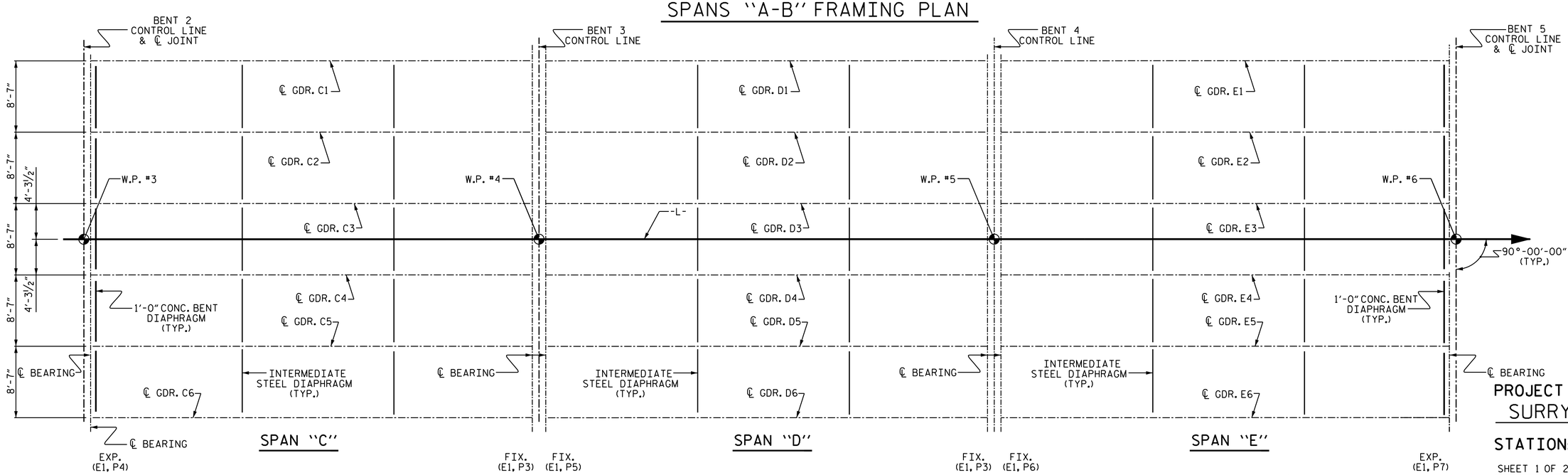

SPANS "C-D-E" FRAMING PLAN

PROJECT NO. B-5831

SURRY/YADKIN COUNTY

STATION: 32+28.00 -L-

SHEET 1 OF 2

NORTH CAROLINA PROFESSIONAL SEAL 20125 ENGINEER MARSHALL G. CHEEK, JR.

Marshall G. Cheek, Jr.

5FBCC2F3A4DC413...

9/23/2025

DOCUMENT NOT CONSIDERED FINAL UNLESS ALL SIGNATURES COMPLETED

TGS ENGINEERS
706 HILLSBOROUGH STREET
SUITE 200
RALEIGH, NC 27603
PH (919) 773-8887
CORP. LICENSE NO.: C-0275

STATE OF NORTH CAROLINA
DEPARTMENT OF TRANSPORTATION
RALEIGH

SUPERSTRUCTURE
FRAMING PLAN

REVISIONS						
NO.	BY:	DATE:	NO.	BY:	DATE:	
1			3			
2			4			

SHEET NO. S-16

TOTAL SHEETS 61

DRAWN BY :	S. B. WILLIAMS	DATE :	5-24
CHECKED BY :	MGC	DATE :	8-24
DESIGN ENGINEER OF RECORD:	MGC	DATE :	12-24

12/18/2024
c:\workdir\ncdot-pw.bentley.com_ncdot-pw-01\sam massinople\d0166590\B-5831-SMU-PS-850006.dgn
smassinople

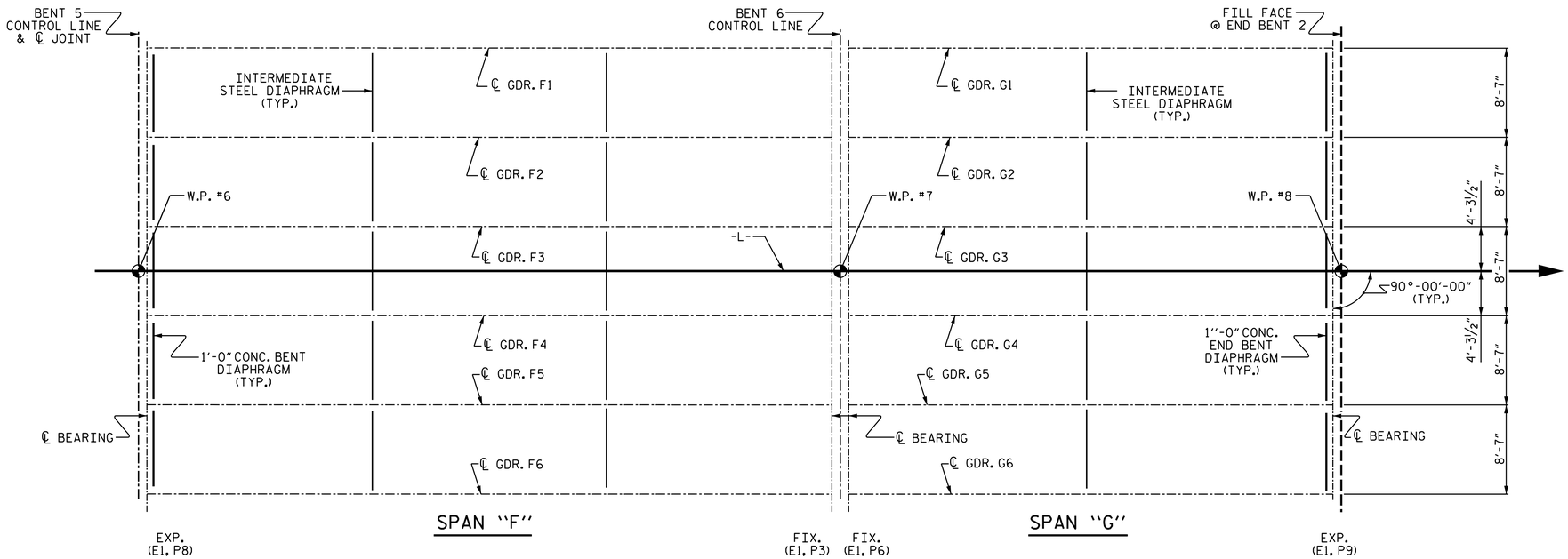

SPANS "F-G" FRAMING PLAN

GIRDER	"A"	"B"	"C"	"D"
A1 THRU A6	46'-8"	46'-8"	-	93'-4"
B1 THRU B6	41'-8½"	41'-0"	41'-8½"	124'-5"
C1 THRU C6	40'-0½"	39'-4"	40'-0½"	119'-5"
D1 THRU D6	43'-3½"	42'-7"	43'-3½"	129'-2"
E1 THRU E6	41'-8½"	41'-0"	41'-8½"	124'-5"
F1 THRU F6	43'-4½"	42'-8"	43'-4½"	129'-5"
G1 THRU G6	44'-2"	44'-2"	-	88'-4"

1½" Ø HOLE LOCATION

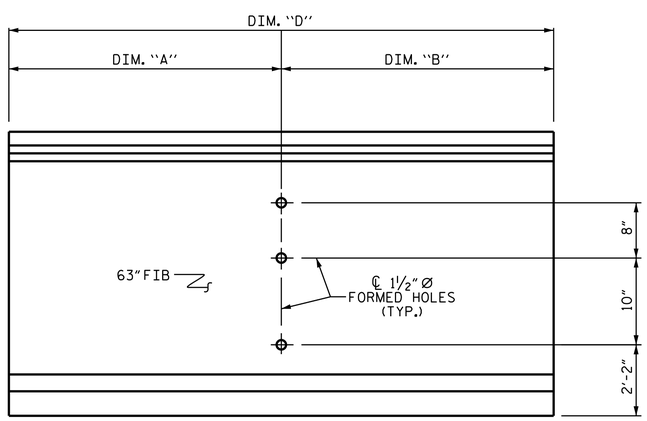

ELEVATION- 1½" Ø HOLE LOCATION

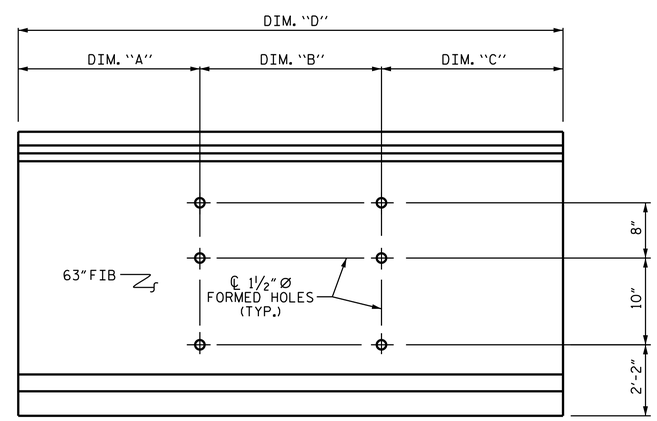

ELEVATION- 1½" Ø HOLE LOCATION

PROJECT NO. B-5831
SURRY/YADKIN COUNTY
STATION: 32+28.00 -L-

SHEET 2 OF 2

NORTH CAROLINA PROFESSIONAL SEAL 20125 ENGINEER MARSHALL G. GRECKE, JR.
Marshall G. Grecke, Jr.
5FBCC2F3A4DC413...
9/23/2025

DOCUMENT NOT CONSIDERED FINAL UNLESS ALL SIGNATURES COMPLETED

TGS ENGINEERS
706 HILLSBOROUGH STREET
SUITE 200
RALEIGH, NC 27603
PH (919) 773-8887
CORP. LICENSE NO.: C-0275

STATE OF NORTH CAROLINA
DEPARTMENT OF TRANSPORTATION
RALEIGH

SUPERSTRUCTURE
FRAMING PLAN

REVISIONS						
NO.	BY:	DATE:	NO.	BY:	DATE:	
1			3			
2			4			

SHEET NO. S-17
TOTAL SHEETS 61

DRAWN BY : S. B. WILLIAMS DATE : 5-24
CHECKED BY : MGC DATE : 8-24
DESIGN ENGINEER OF RECORD: MGC DATE : 12-24

12/18/2024
c:\workdir\ncdot-pw.bentley.com_ncdot-pw-01\sam massinople\d0166590\B-5831-SMU-PS-850006.dgn
smassinople

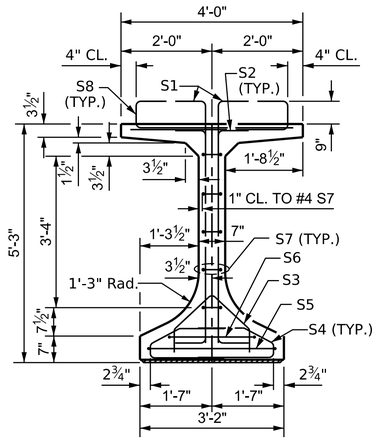

SECTION A-A

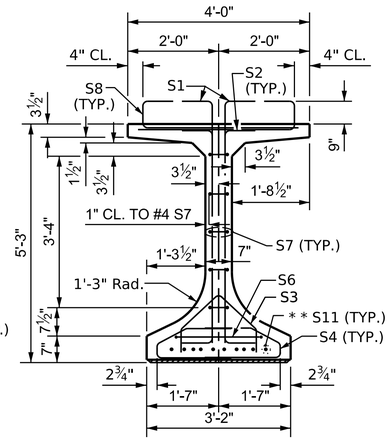

SECTION B-B

** FOR S11 BARS, SEE DETAIL "C" OF PRESTRESSED CONCRETE GIRDER CONTINUOUS FOR LIVE LOAD DETAILS SHEET 8 OF 9.

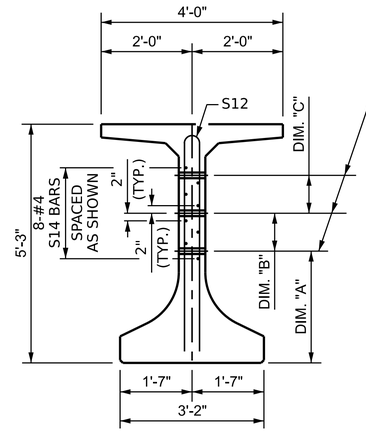

℄ 1½" ∅ FORMED HOLE. SEE ELEVATION FOR LOCATION. FOR DIM."A'', "B" & "C'' SEE ``INTERMEDIATE STEEL DIAPHRAGMS'', SHEET 9 OF 9.

DEBONDING LEGEND

- ● FULLY BONDED STRANDS
- ◇ STRANDS DEBONDED FOR 4'-0" FROM END OF GIRDER
- ◇ STRANDS DEBONDED FOR 8'-0" FROM END OF GIRDER

SECTION C-C

(S8, S9 AND S10 BARS NOT SHOWN)

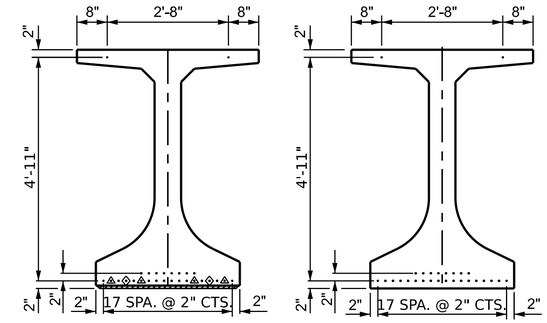

0.6" ∅ LOW RELAXATION STRAND LAYOUT

0.6"∅ L. R. GRADE 270 STRANDS		
AREA (SQUARE INCHES)	ULTIMATE STRENGTH (LBS. PER STRAND)	APPLIED PRESTRESS (LBS. PER STRAND)
0.217	58,600	43,950

REINFORCING STEEL FOR ONE GDR

BAR	NUMBER	SIZE	TYPE	LENGTH	WEIGHT
S1	76	#5	5	6'-2"	489
S2	28	#5	4	6'-1"	178
S3	38	#3	2	3'-4"	48
S4	76	#3	1	4'-3"	121
S5	1	#5	3	10'-9"	11
S6	2	#5	3	9'-9"	20
S7	10	#4	3	8'-5"	56
S8	208	#5	7	4'-9"	1030
S9	132	#4	5	6'-2"	544
S10	49	#5	STR	3'-8"	187
* S11	10	#6	STR	4'-8"	70
S12	4	#5	6	10'-0"	42
S13	1	#3	STR	2'-10"	1
S14	8	#4	STR	8'-0"	43

BAR TYPES

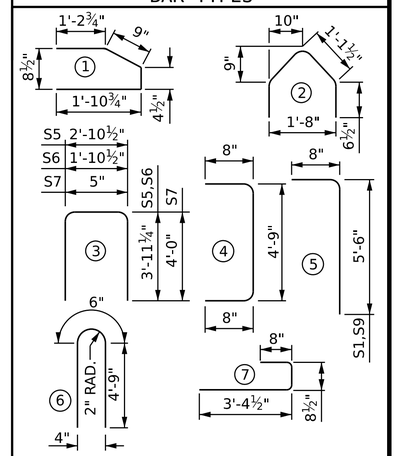

ALL BAR DIMENSIONS ARE OUT-TO-OUT

QUANTITIES FOR ONE GIRDER		
REINFORCING STEEL	7,500 PSI CONCRETE	0.6" ∅ L.R. STRANDS
LB.	C.Y.	No.
2,840	23.9	28

GIRDERS REQUIRED		
NUMBER	LENGTH	TOTAL LENGTH
6	93'-4"	560'-0"

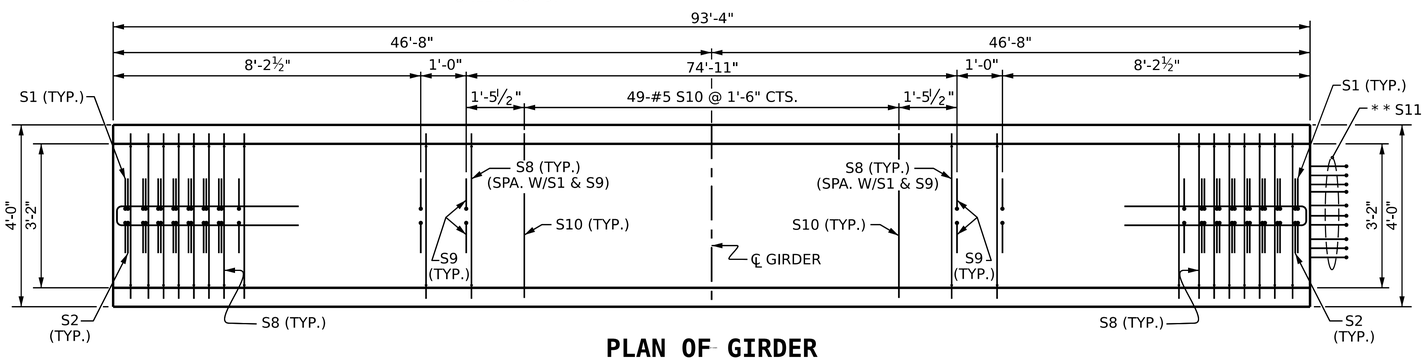

PLAN OF GIRDER

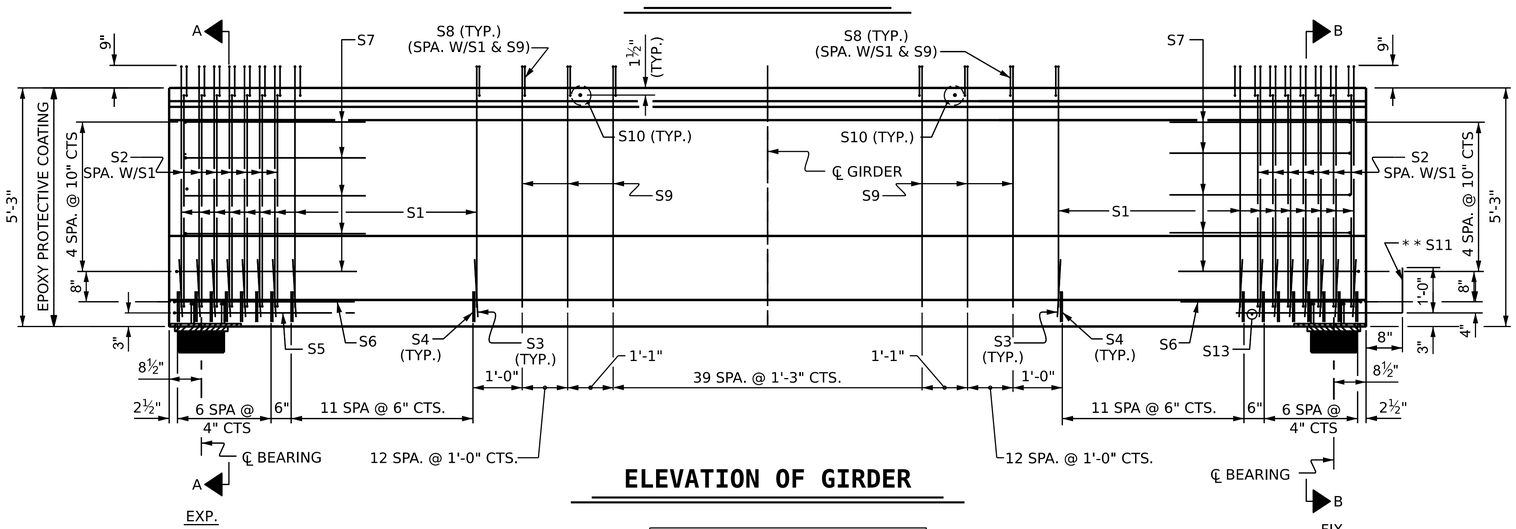

ELEVATION OF GIRDER

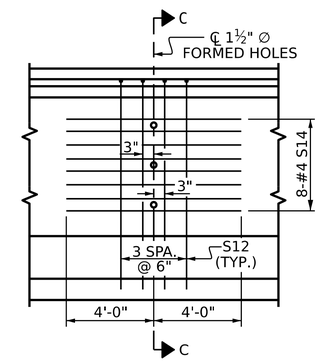

PARTIAL ELEVATION

SHOWING INTERMEDIATE STEEL DIAPHRAGM REINFORCING STEEL FOR GIRDER Nos. 1-6

* NOTE:

S11 BARS SHALL BE BENT BEFORE SHIPMENT. HEAT BENDING SHALL NOT BE ALLOWED.

PROJECT NO. B-5831

SURRY/YADKIN COUNTY

STATION: 32+28.00 -L-

SHEET 1 OF 9

NORTH CAROLINA PROFESSIONAL SEAL 20125 ENGINEER MARSHALL C. CHEEK, JR.

9/23/2025

DOCUMENT NOT CONSIDERED FINAL UNLESS ALL SIGNATURES COMPLETED

TGS ENGINEERS
706 HILLSBOROUGH STREET
SUITE 200
RALEIGH, NC 27603
PH (919) 773-8887
CORP. LICENSE NO.: C-0275

STATE OF NORTH CAROLINA
DEPARTMENT OF TRANSPORTATION
RALEIGH

63" FIB PRESTRESSED CONCRETE GIRDER CONTINUOUS FOR LIVE LOAD SPAN A

REVISIONS								SHEET NO.
NO.	BY:	DATE:	NO.	BY:	DATE:			S-18
1			3					TOTAL SHEETS
2			4					61

ASSEMBLED BY : S. B. WILLIAMS DATE : 6-24
CHECKED BY : MGC DATE : 12-24
DESIGN ENGINEER OF RECORD : STM DATE : 12-24

12/19/2024
c:\workdir\ncdot-pw.bentley.com_ncdot-pw-01\sam massinople\d0166590\B-5831-SMU-PS-850006.dgn
smassinople

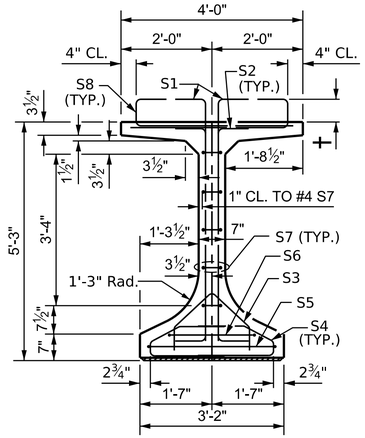

SECTION A-A

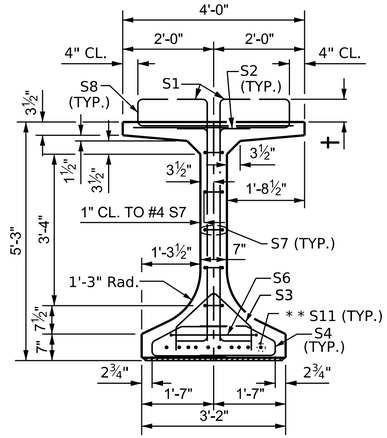

SECTION B-B

* * FOR S11 BARS, SEE DETAIL "C" OF PRESTRESSED CONCRETE GIRDER CONTINUOUS FOR LIVE LOAD DETAILS, SHEET 8 OF 9.

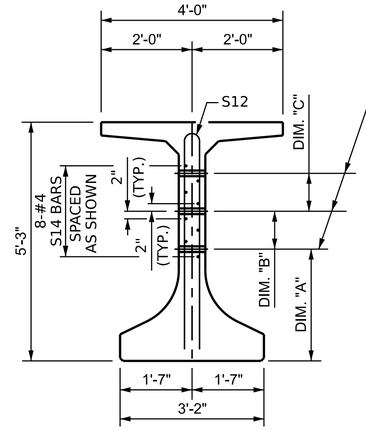

SECTION C-C

(S8, S9 AND S10 BARS NOT SHOWN)

℄ 1½" ∅ FORMED HOLE. SEE ELEVATION FOR LOCATION. FOR DIM."A'', "B" & "C'' SEE `INTERMEDIATE STEEL DIAPHRAGMS'', SHEET 9 OF 9.

DEBONDING LEGEND

- FULLY BONDED STRANDS
- STRANDS DEBONDED FOR 4'-0" FROM END OF GIRDER
- STRANDS DEBONDED FOR 8'-0" FROM END OF GIRDER
- STRANDS DEBONDED FOR 12'-0" FROM END OF GIRDER
- STRANDS DEBONDED FOR 16'-0" FROM END OF GIRDER

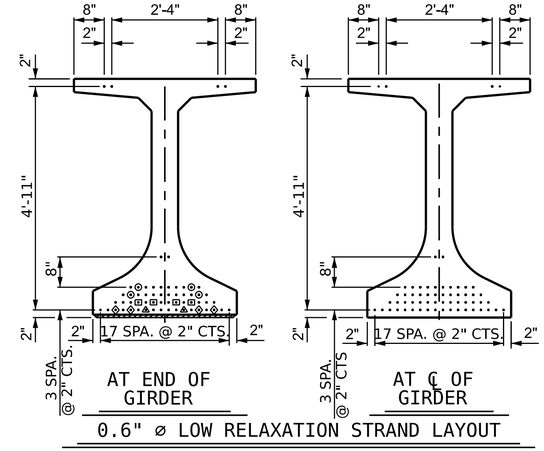

0.6" ∅ LOW RELAXATION STRAND LAYOUT

0.6"∅ L. R. GRADE 270 STRANDS		
AREA (SQUARE INCHES)	ULTIMATE STRENGTH (LBS. PER STRAND)	APPLIED PRESTRESS (LBS. PER STRAND)
0.217	58,600	43,950

REINFORCING STEEL FOR ONE GDR

BAR	NUMBER	SIZE	TYPE	LENGTH	WEIGHT
S1	76	#5	5	6'-2"	489
S2	28	#5	4	6'-1"	178
S3	38	#3	2	3'-4"	48
S4	76	#3	1	4'-3"	121
S5	1	#5	3	10'-9"	11
S6	2	#5	3	9'-9"	20
S7	10	#4	3	8'-5"	56
S8	258	#5	7	4'-9"	1,278
S9	182	#4	5	6'-2"	750
S10	70	#5	STR	3'-8"	268
* S11	10	#6	STR	4'-8"	70
S12	8	#5	6	10'-0"	83
S13	1	#3	STR	2'-10"	1
S14	16	#4	STR	8'-0"	86

BAR TYPES

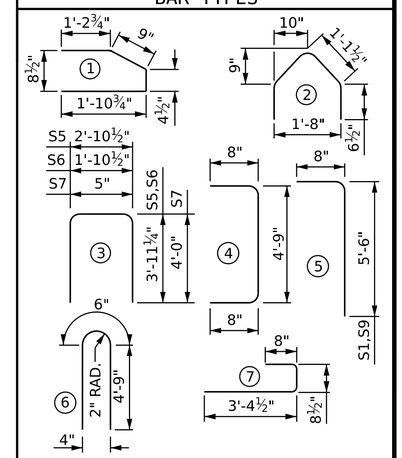

ALL BAR DIMENSIONS ARE OUT-TO-OUT

QUANTITIES FOR ONE GIRDER

REINFORCING STEEL	9,000 PSI CONCRETE	0.6" ∅ L.R. STRANDS
LB.	C.Y.	No.
3,459	31.9	60

GIRDERS REQUIRED

NUMBER	LENGTH	TOTAL LENGTH
6	124'-5"	746'-6"

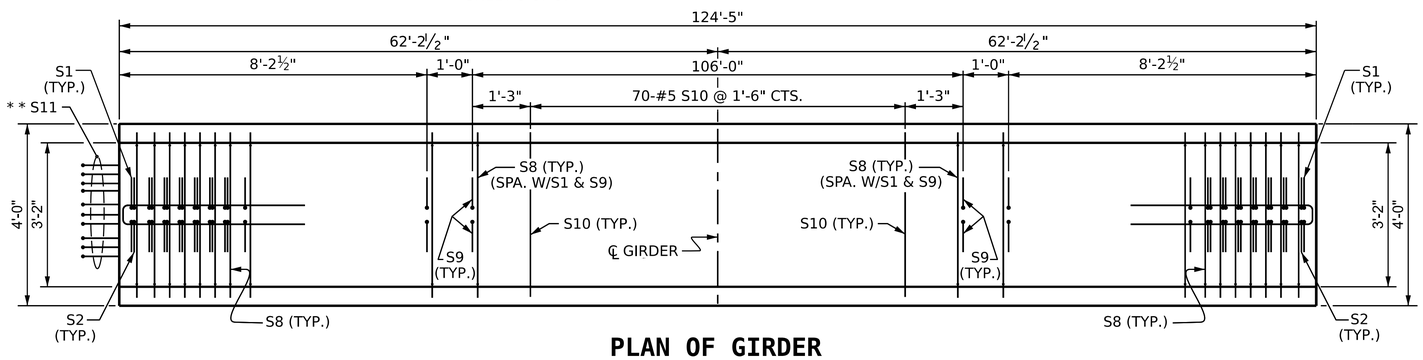

PLAN OF GIRDER

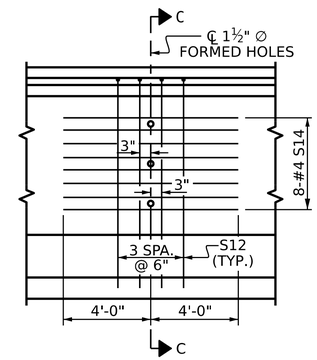

PARTIAL ELEVATION

SHOWING INTERMEDIATE STEEL DIAPHRAGM REINFORCING STEEL FOR GIRDER Nos. 1-6

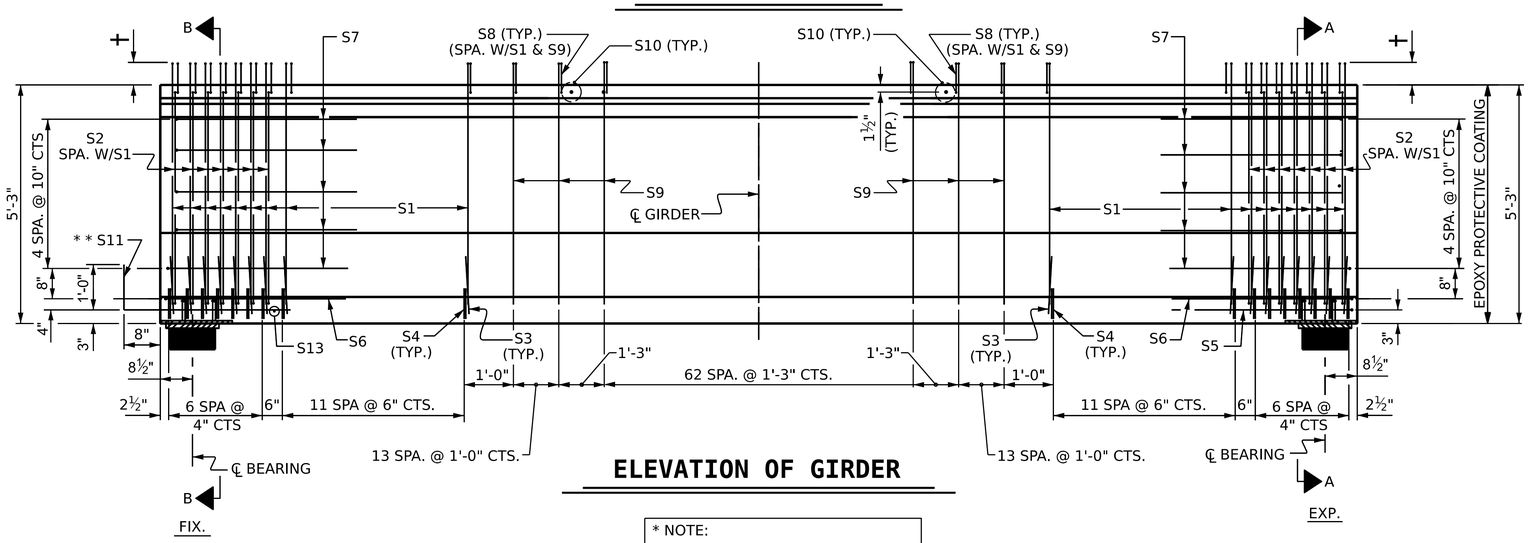

ELEVATION OF GIRDER

* NOTE:

S11 BARS SHALL BE BENT BEFORE SHIPMENT. HEAT BENDING SHALL NOT BE ALLOWED.

† THE PROJECTION OF THE S1 & S9 BARS VARY LINEARLY FROM 9" AT THE ENDS OF THE GIRDER TO 6" AT THE CENTERLINE OF THE GIRDER.

PROJECT NO. B-5831

SURRY/YADKIN COUNTY

STATION: 32+28.00 -L-

SHEET 2 OF 9

NORTH CAROLINA PROFESSIONAL SEAL 20125 ENGINEER MARSHALL G. CHEEK, JR.

Signed by: Marshall G. Cheek, Jr.
SFBCC2F3A4DC413...

9/23/2025

DOCUMENT NOT CONSIDERED FINAL UNLESS ALL SIGNATURES COMPLETED

TGS ENGINEERS
706 HILLSBOROUGH STREET
SUITE 200
RALEIGH, NC 27603
PH (919) 773-8887
CORP. LICENSE NO.: C-0275

STATE OF NORTH CAROLINA
DEPARTMENT OF TRANSPORTATION
RALEIGH

63" FIB PRESTRESSED CONCRETE GIRDER CONTINUOUS FOR LIVE LOAD SPAN B

REVISIONS							
NO.	BY:	DATE:	NO.	BY:	DATE:	SHEET NO.	
1			3			S-19	
2			4			TOTAL SHEETS	
						61	

ASSEMBLED BY : S. B. WILLIAMS DATE : 6-24
CHECKED BY : MGC DATE : 12-24
DESIGN ENGINEER OF RECORD : STM DATE : 12-24

12/19/2024
c:\workdir\ncdot-pw.bentley.com_ncdot-pw-01\sam massinople\d0166590\B-5831-SMU-PS-850006.dgn
smassinople

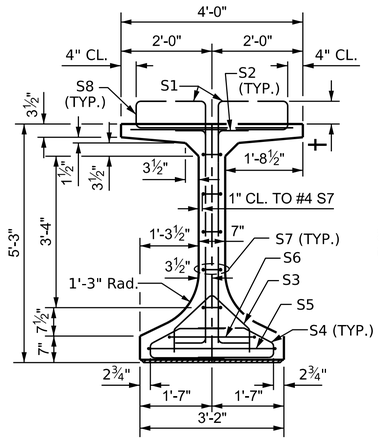

SECTION A-A

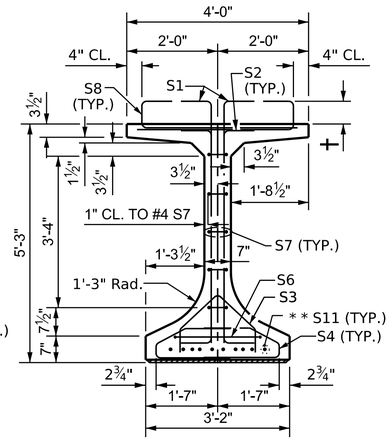

SECTION B-B

** FOR S11 BARS, SEE DETAIL "C" OF PRESTRESSED CONCRETE GIRDER CONTINUOUS FOR LIVE LOAD DETAILS SHEET 8 OF 9.

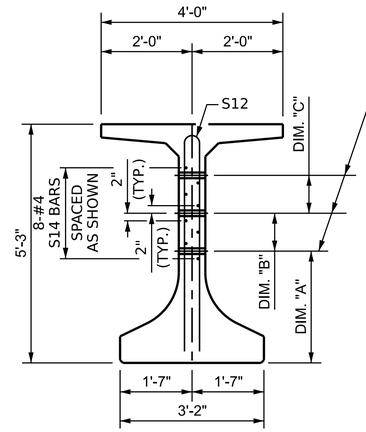

SECTION C-C

(S8, S9 AND S10 BARS NOT SHOWN)

℄ 1½" ∅ FORMED HOLE. SEE ELEVATION FOR LOCATION. FOR DIM."A'', "B" & "C'' SEE ``INTERMEDIATE STEEL DIAPHRAGMS'', SHEET 9 OF 9.

DEBONDING LEGEND

- FULLY BONDED STRANDS
- STRANDS DEBONDED FOR 4'-0" FROM END OF GIRDER
- STRANDS DEBONDED FOR 8'-0" FROM END OF GIRDER
- STRANDS DEBONDED FOR 12'-0" FROM END OF GIRDER

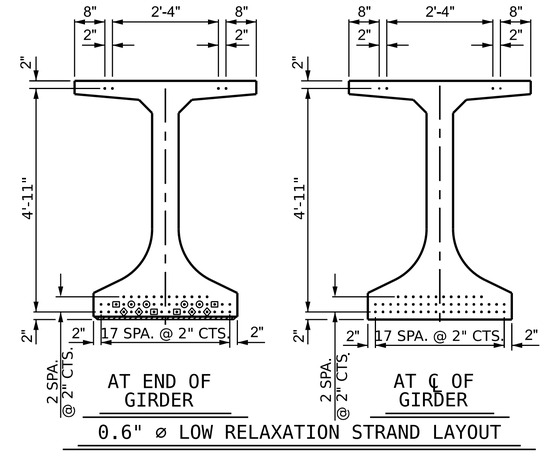

0.6" ∅ LOW RELAXATION STRAND LAYOUT

0.6"∅ L. R. GRADE 270 STRANDS		
AREA (SQUARE INCHES)	ULTIMATE STRENGTH (LBS. PER STRAND)	APPLIED PRESTRESS (LBS. PER STRAND)
0.217	58,600	43,950

REINFORCING STEEL FOR ONE GDR

BAR	NUMBER	SIZE	TYPE	LENGTH	WEIGHT
S1	76	#5	5	6'-2"	489
S2	28	#5	4	6'-1"	178
S3	38	#3	2	3'-4"	48
S4	76	#3	1	4'-3"	121
S5	1	#5	3	10'-9"	11
S6	2	#5	3	9'-9"	20
S7	10	#4	3	8'-5"	56
S8	250	#5	7	4'-9"	1,239
S9	174	#4	5	6'-2"	717
S10	67	#5	STR	3'-8"	256
* S11	10	#6	STR	4'-8"	70
S12	8	#5	6	10'-0"	83
S13	1	#3	STR	2'-10"	1
S14	16	#4	STR	8'-0"	86

BAR TYPES

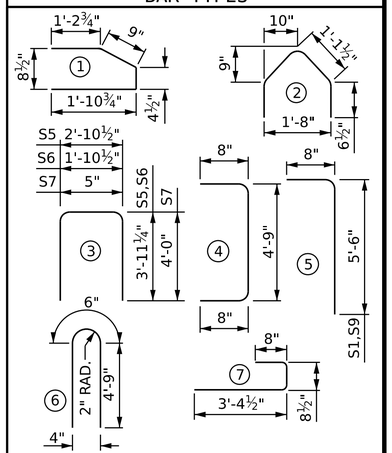

ALL BAR DIMENSIONS ARE OUT-TO-OUT

QUANTITIES FOR ONE GIRDER

REINFORCING STEEL	9,000 PSI CONCRETE	0.6" ∅ L.R. STRANDS
LB.	C.Y.	No.
3,375	30.6	52

GIRDERS REQUIRED

NUMBER	LENGTH	TOTAL LENGTH
6	119'-5"	716'-6"

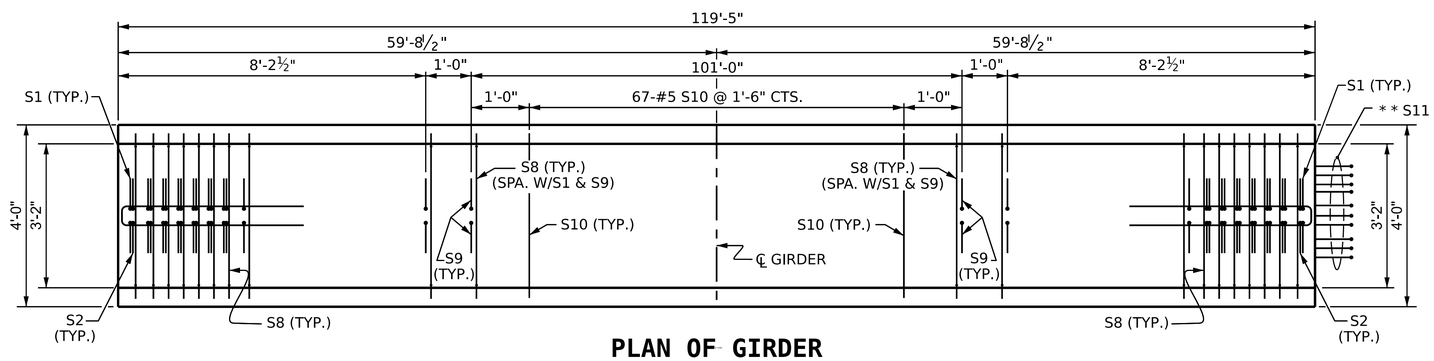

PLAN OF GIRDER

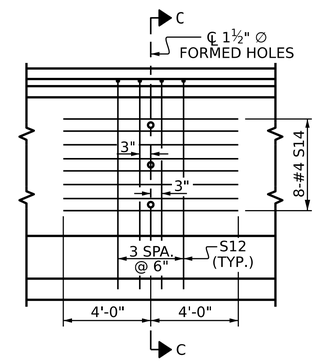

PARTIAL ELEVATION

SHOWING INTERMEDIATE STEEL DIAPHRAGM REINFORCING STEEL FOR GIRDER Nos. 1-6

† THE PROJECTION OF THE S1 & S9 BARS VARY LINEARLY FROM 9" AT THE ENDS OF THE GIRDER TO 6½" AT THE CENTERLINE OF THE GIRDER.

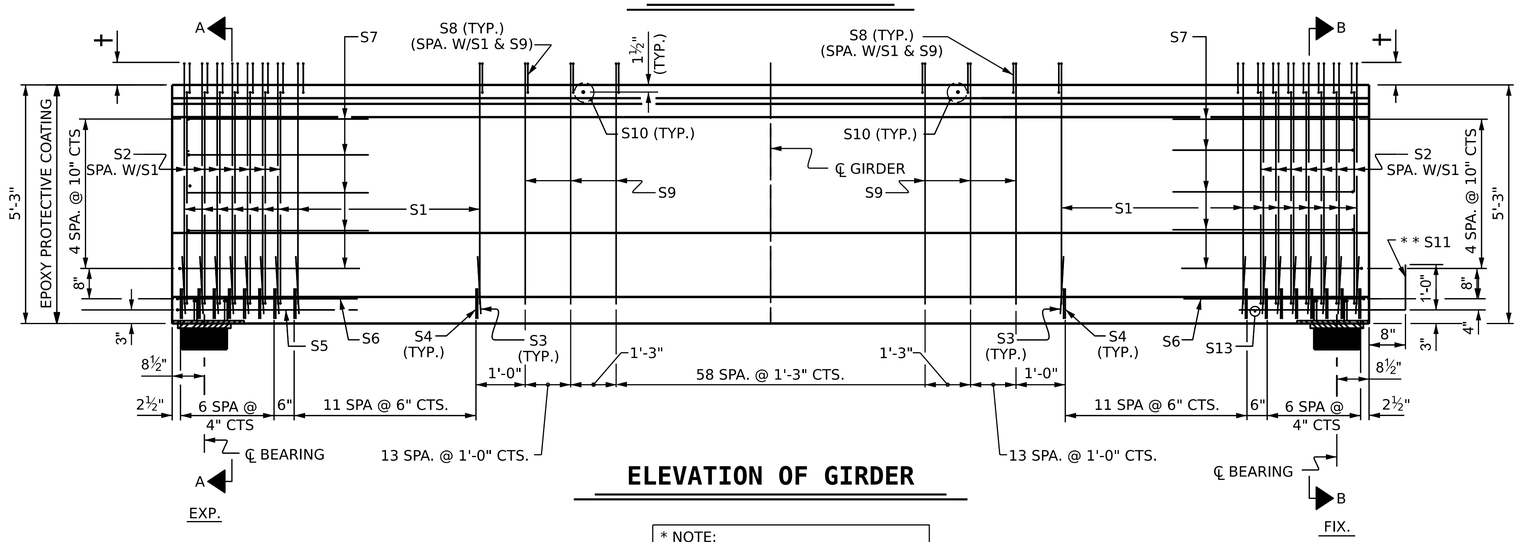

ELEVATION OF GIRDER

* NOTE:

S11 BARS SHALL BE BENT BEFORE SHIPMENT. HEAT BENDING SHALL NOT BE ALLOWED.

PROJECT NO. B-5831

SURRY/YADKIN COUNTY

STATION: 32+28.00 -L-

SHEET 3 OF 9

STATE OF NORTH CAROLINA
DEPARTMENT OF TRANSPORTATION
RALEIGH

63" FIB PRESTRESSED CONCRETE GIRDER CONTINUOUS FOR LIVE LOAD SPAN C

NORTH CAROLINA PROFESSIONAL SEAL 20125 ENGINEER MARSHALL C. CHEEK, JR.

Marshall C. Cheek, Jr.
5FBCC2F3A4DC413...
9/23/2025

DOCUMENT NOT CONSIDERED FINAL UNLESS ALL SIGNATURES COMPLETED

TGS ENGINEERS
706 HILLSBOROUGH STREET
SUITE 200
RALEIGH, NC 27603
PH (919) 773-8887
CORP. LICENSE NO.: C-0275

REVISIONS						SHEET NO.
NO.	BY:	DATE:	NO.	BY:	DATE:	S-20
1			3			TOTAL SHEETS
2			4			61

ASSEMBLED BY : S. B. WILLIAMS DATE : 6-24
CHECKED BY : MGC DATE : 12-24
DESIGN ENGINEER OF RECORD : STM DATE : 12-24

12/19/2024
c:\workdir\ncdot-pw.bentley.com_ncdot-pw-01\sam massinople\d0166590\B-5831-SMU-PS-850006.dgn
smassinople

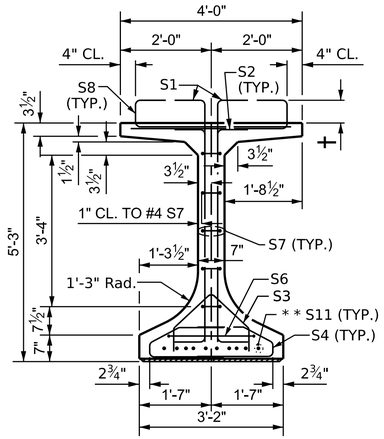

SECTION A-A

** FOR S11 BARS, SEE DETAIL "C" OF PRESTRESSED CONCRETE GIRDER CONTINUOUS FOR LIVE LOAD DETAILS SHEET 8 OF 9.

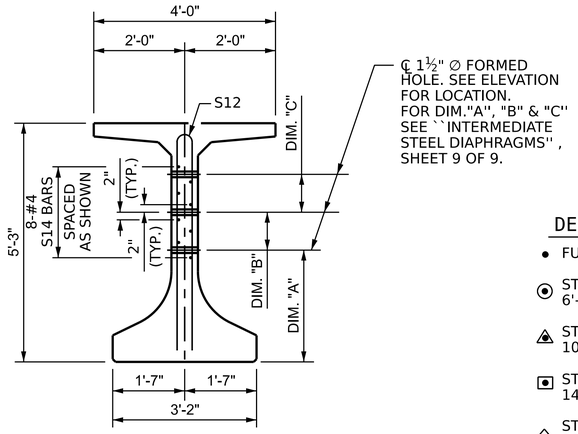

SECTION B-B

(S8, S9 AND S10 BARS NOT SHOWN)

DEBONDING LEGEND

- FULLY BONDED STRANDS
- STRANDS DEBONDED FOR 6'-0" FROM END OF GIRDER
- STRANDS DEBONDED FOR 10'-0" FROM END OF GIRDER
- STRANDS DEBONDED FOR 14'-0" FROM END OF GIRDER
- STRANDS DEBONDED FOR 18'-0" FROM END OF GIRDER

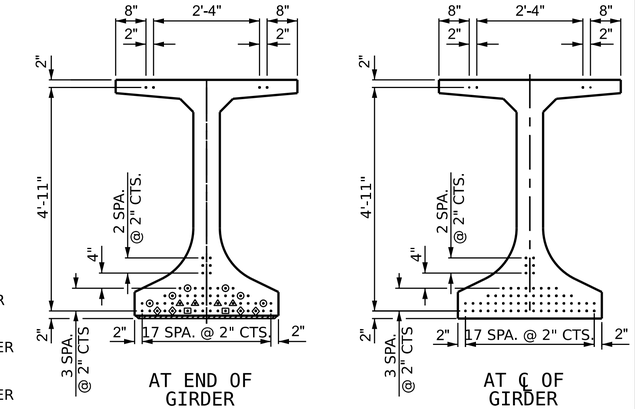

0.6" ∅ LOW RELAXATION STRAND LAYOUT

0.6"∅ L. R. GRADE 270 STRANDS		
AREA (SQUARE INCHES)	ULTIMATE STRENGTH (LBS. PER STRAND)	APPLIED PRESTRESS (LBS. PER STRAND)
0.217	58,600	43,950

REINFORCING STEEL FOR ONE GDR

BAR	NUMBER	SIZE	TYPE	LENGTH	WEIGHT
S1	76	#5	5	6'-2"	489
S2	28	#5	4	6'-1"	178
S3	38	#3	2	3'-4"	48
S4	76	#3	1	4'-3"	121
S6	2	#5	3	9'-9"	20
S7	10	#4	3	8'-5"	56
S8	266	#5	7	4'-9"	1,318
S9	190	#4	5	6'-2"	783
S10	73	#5	STR	3'-8"	279
* S11	20	#6	STR	4'-8"	140
S12	8	#5	6	10'-0"	83
S13	2	#3	STR	2'-10"	2
S14	16	#4	STR	8'-0"	86

BAR TYPES

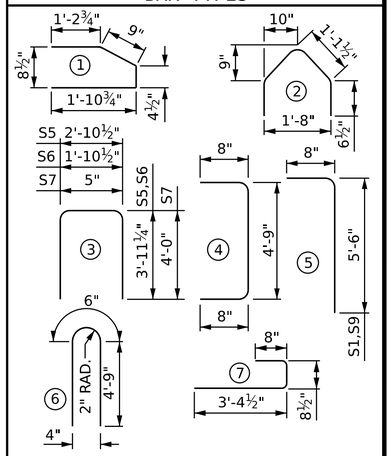

ALL BAR DIMENSIONS ARE OUT-TO-OUT

QUANTITIES FOR ONE GIRDER		
REINFORCING STEEL	9,000 PSI CONCRETE	0.6" ∅ L.R. STRANDS
LB.	C.Y.	No.
3,603	33.1	66

GIRDERS REQUIRED		
NUMBER	LENGTH	TOTAL LENGTH
6	129'-2"	775'-0"

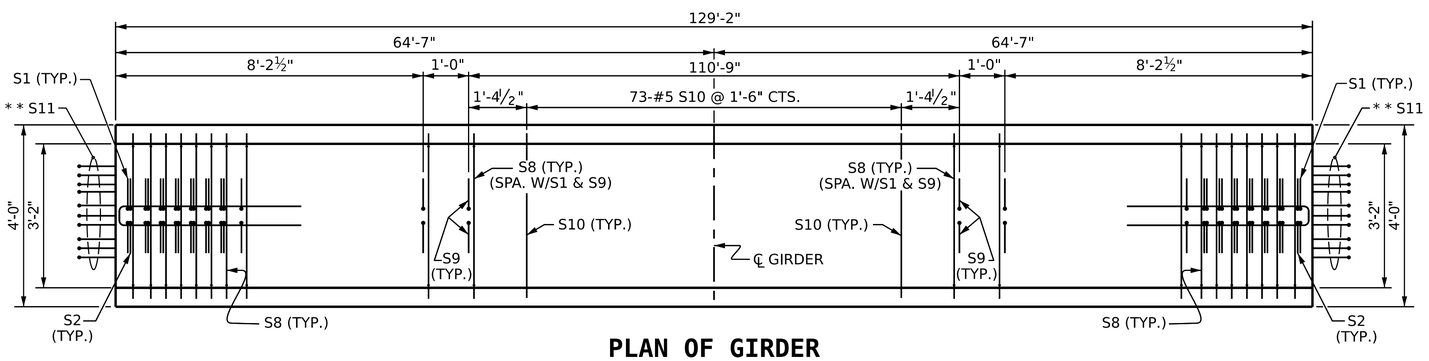

PLAN OF GIRDER

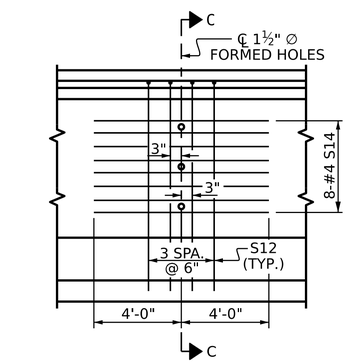

PARTIAL ELEVATION

SHOWING INTERMEDIATE STEEL DIAPHRAGM REINFORCING STEEL FOR GIRDER Nos. 1-6

† THE PROJECTION OF THE S1 & S9 BARS VARY LINEARLY FROM 9" AT THE ENDS OF THE GIRDER TO 5½" AT THE CENTERLINE OF THE GIRDER.

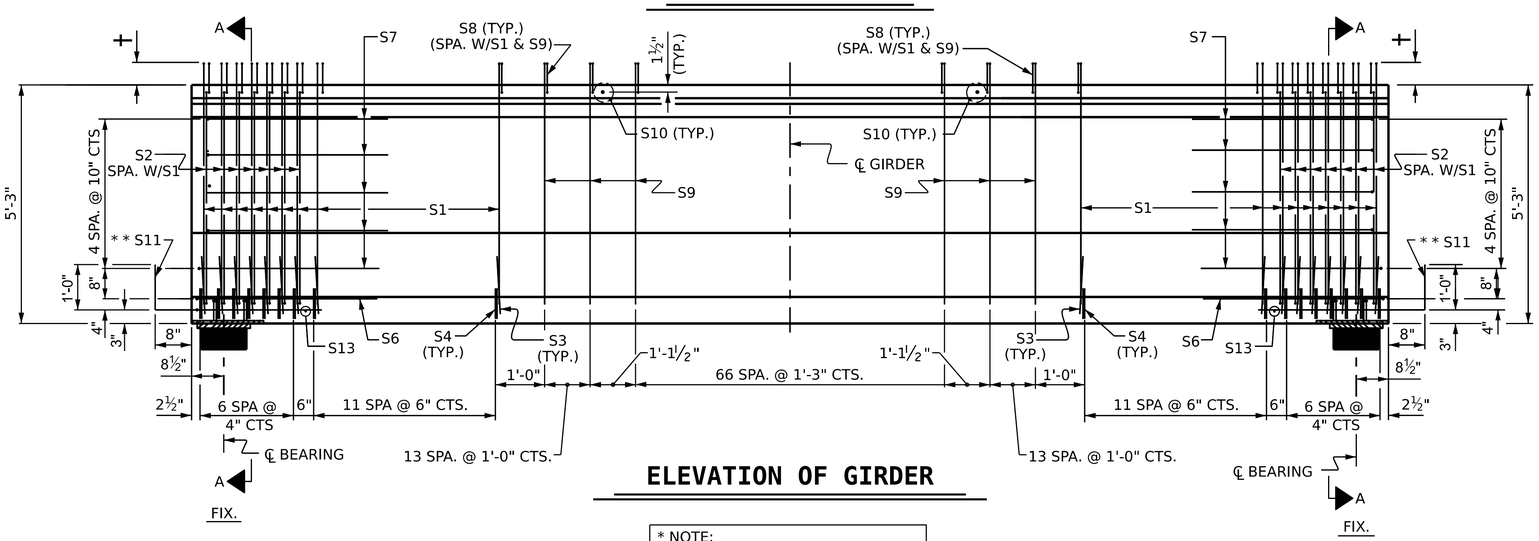

ELEVATION OF GIRDER

* NOTE:

S11 BARS SHALL BE BENT BEFORE SHIPMENT. HEAT BENDING SHALL NOT BE ALLOWED.

PROJECT NO. B-5831

SURRY/YADKIN COUNTY

STATION: 32+28.00 -L-

SHEET 4 OF 9

NORTH CAROLINA PROFESSIONAL SEAL 20125 ENGINEER MARSHALL B. CHEEK, JR.

Marshall B. Cheek, Jr.
5FBCC2F3A4DC413...
9/23/2025

DOCUMENT NOT CONSIDERED FINAL UNLESS ALL SIGNATURES COMPLETED

TGS ENGINEERS
706 HILLSBOROUGH STREET
SUITE 200
RALEIGH, NC 27603
PH (919) 773-8887
CORP. LICENSE NO.: C-0275

STATE OF NORTH CAROLINA
DEPARTMENT OF TRANSPORTATION
RALEIGH

63" FIB PRESTRESSED CONCRETE GIRDER CONTINUOUS FOR LIVE LOAD SPAN D

REVISIONS							SHEET NO.
NO.	BY:	DATE:	NO.	BY:	DATE:		S-21
1			3				TOTAL SHEETS
2			4				61

ASSEMBLED BY : S. B. WILLIAMS	DATE : 6-24		
CHECKED BY : MGC	DATE : 12-24		
DESIGN ENGINEER OF RECORD : STM	DATE : 12-24		

12/19/2024
c:\workdir\ncdot-pw.bentley.com_ncdot-pw-01\sam massinople\d0166590\B-5831-SMU-PS-850006.dgn
smassinople

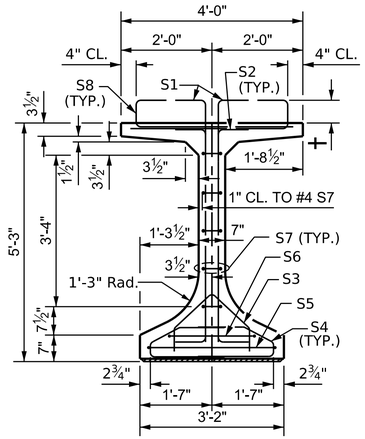

SECTION A-A

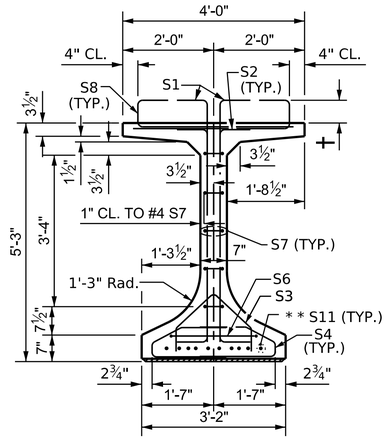

SECTION B-B

** FOR S11 BARS, SEE DETAIL "C" OF PRESTRESSED CONCRETE GIRDER CONTINUOUS FOR LIVE LOAD DETAILS, SHEET 8 OF 9.

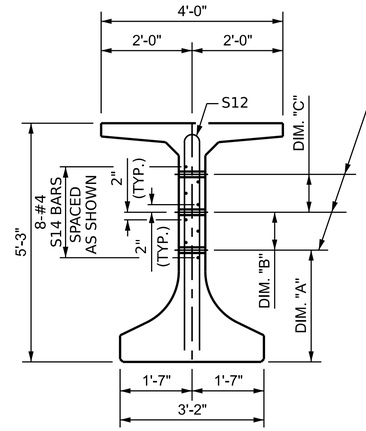

SECTION C-C

(S8, S9 AND S10 BARS NOT SHOWN)

℄ 1½" ∅ FORMED HOLE. SEE ELEVATION FOR LOCATION. FOR DIM."A'', "B" & "C'' SEE ``INTERMEDIATE STEEL DIAPHRAGMS'', SHEET 9 OF 9.

DEBONDING LEGEND

- FULLY BONDED STRANDS
- STRANDS DEBONDED FOR 4'-0" FROM END OF GIRDER
- STRANDS DEBONDED FOR 8'-0" FROM END OF GIRDER
- STRANDS DEBONDED FOR 12'-0" FROM END OF GIRDER
- STRANDS DEBONDED FOR 16'-0" FROM END OF GIRDER

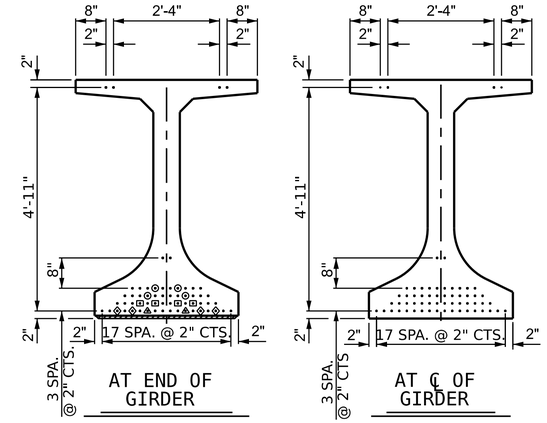

0.6" ∅ LOW RELAXATION STRAND LAYOUT

0.6"∅ L. R. GRADE 270 STRANDS		
AREA (SQUARE INCHES)	ULTIMATE STRENGTH (LBS. PER STRAND)	APPLIED PRESTRESS (LBS. PER STRAND)
0.217	58,600	43,950

REINFORCING STEEL FOR ONE GDR

BAR	NUMBER	SIZE	TYPE	LENGTH	WEIGHT
S1	76	#5	5	6'-2"	489
S2	28	#5	4	6'-1"	178
S3	38	#3	2	3'-4"	48
S4	76	#3	1	4'-3"	121
S5	1	#5	3	10'-9"	11
S6	2	#5	3	9'-9"	20
S7	10	#4	3	8'-5"	56
S8	258	#5	7	4'-9"	1,278
S9	182	#4	5	6'-2"	750
S10	70	#5	STR	3'-8"	268
* S11	10	#6	STR	4'-8"	70
S12	8	#5	6	10'-0"	83
S13	1	#3	STR	2'-10"	1
S14	16	#4	STR	8'-0"	86

BAR TYPES

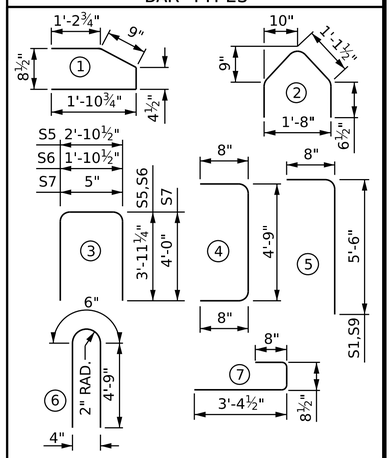

ALL BAR DIMENSIONS ARE OUT-TO-OUT

QUANTITIES FOR ONE GIRDER

REINFORCING STEEL	9,000 PSI CONCRETE	0.6" ∅ L.R. STRANDS
LB.	C.Y.	No.
3,459	31.9	60

GIRDERS REQUIRED

NUMBER	LENGTH	TOTAL LENGTH
6	124'-5"	746'-6"

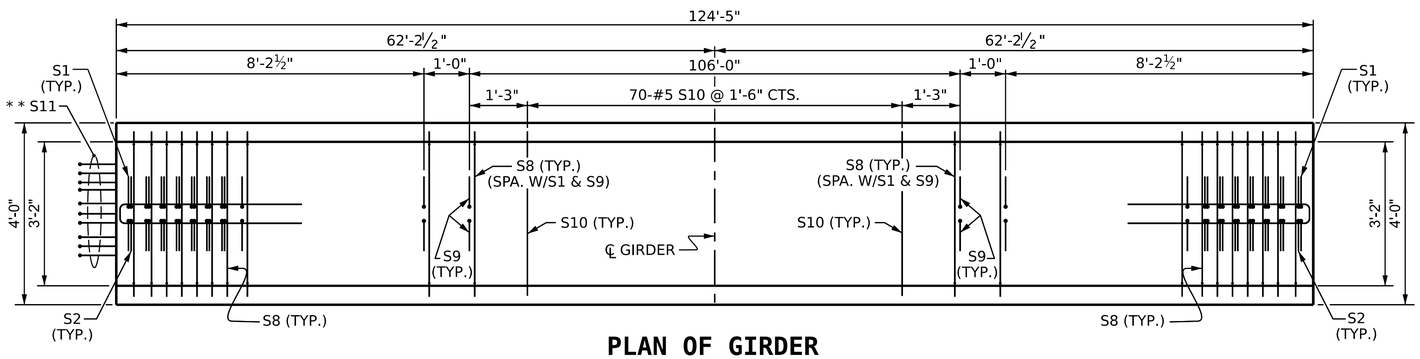

PLAN OF GIRDER

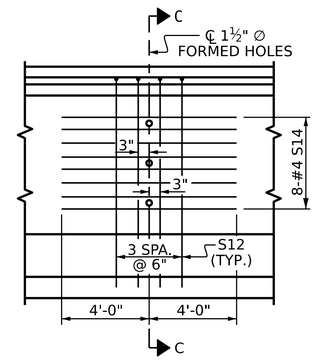

PARTIAL ELEVATION

SHOWING INTERMEDIATE STEEL DIAPHRAGM REINFORCING STEEL FOR GIRDER Nos. 1-6

† THE PROJECTION OF THE S1 & S9 BARS VARY LINEARLY FROM 9" AT THE ENDS OF THE GIRDER TO 7" AT THE CENTERLINE OF THE GIRDER.

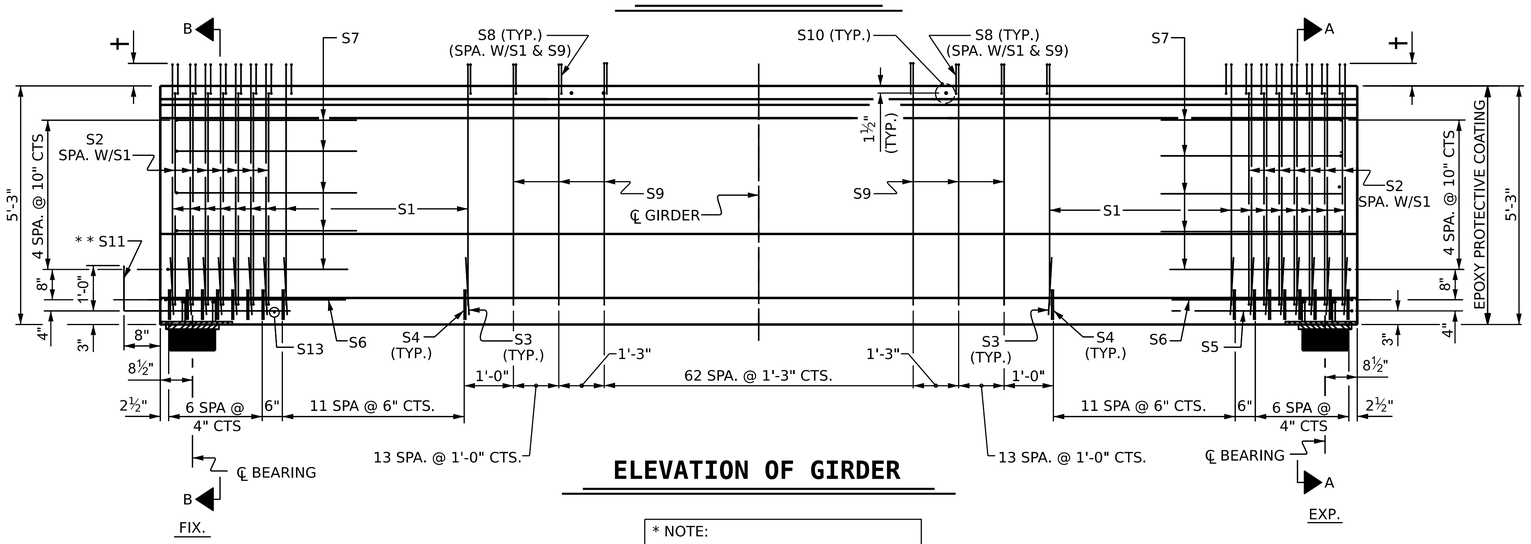

ELEVATION OF GIRDER

* NOTE:

S11 BARS SHALL BE BENT BEFORE SHIPMENT. HEAT BENDING SHALL NOT BE ALLOWED.

PROJECT NO. B-5831

SURRY/YADKIN COUNTY

STATION: 32+28.00 -L-

SHEET 5 OF 9

NORTH CAROLINA PROFESSIONAL SEAL 20125 ENGINEER MARSHALL L. GR. CREEK, JR.

5FBCC2F3A4DC413...

9/23/2025

DOCUMENT NOT CONSIDERED FINAL UNLESS ALL SIGNATURES COMPLETED

TGS ENGINEERS
706 HILLSBOROUGH STREET
SUITE 200
RALEIGH, NC 27603
PH (919) 773-8887
CORP. LICENSE NO. C-0275

STATE OF NORTH CAROLINA
DEPARTMENT OF TRANSPORTATION
RALEIGH

63" FIB PRESTRESSED CONCRETE GIRDER CONTINUOUS FOR LIVE LOAD SPAN E

REVISIONS								SHEET NO.
NO.	BY:	DATE:	NO.	BY:	DATE:			S-22
1			3					TOTAL SHEETS
2			4					61

ASSEMBLED BY : S. B. WILLIAMS DATE : 6-24
CHECKED BY : MGC DATE : 12-24
DESIGN ENGINEER OF RECORD : STM DATE : 12-24

12/19/2024
c:\workdir\ncdot-pw.bentley.com_ncdot-pw-01\sam massinople\d0166590\B-5831-SMU-PS-850006.dgn
smassinople

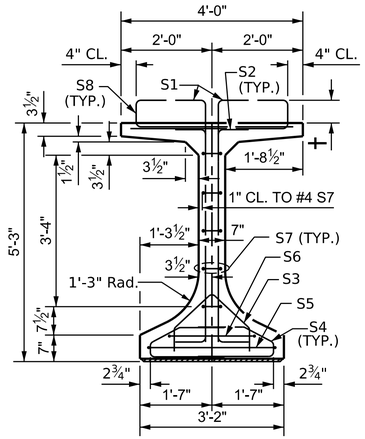

SECTION A-A

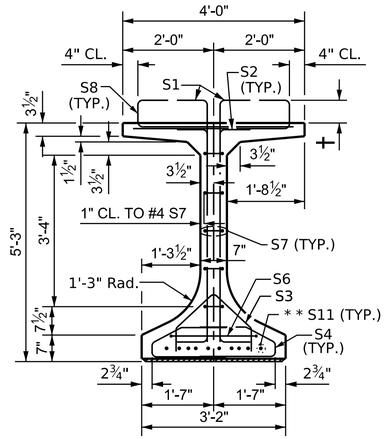

SECTION B-B

** FOR S11 BARS, SEE DETAIL "C" OF PRESTRESSED CONCRETE GIRDER CONTINUOUS FOR LIVE LOAD DETAILS SHEET 8 OF 9.

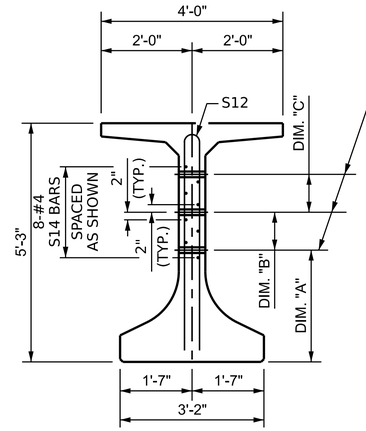

SECTION C-C

(S8, S9 AND S10 BARS NOT SHOWN)

℄ 1½" ∅ FORMED HOLE. SEE ELEVATION FOR LOCATION. FOR DIM."A'', "B" & "C'' SEE ``INTERMEDIATE STEEL DIAPHRAGMS'' , SHEET 9 OF 9.

DEBONDING LEGEND

- FULLY BONDED STRANDS
- STRANDS DEBONDED FOR 6'-0" FROM END OF GIRDER
- STRANDS DEBONDED FOR 10'-0" FROM END OF GIRDER
- STRANDS DEBONDED FOR 14'-0" FROM END OF GIRDER
- STRANDS DEBONDED FOR 18'-0" FROM END OF GIRDER

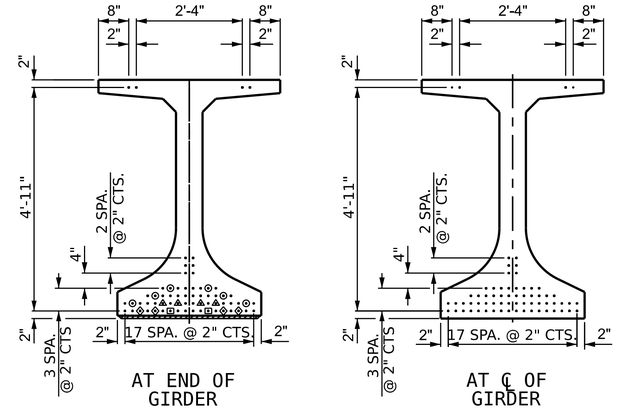

0.6" ∅ LOW RELAXATION STRAND LAYOUT

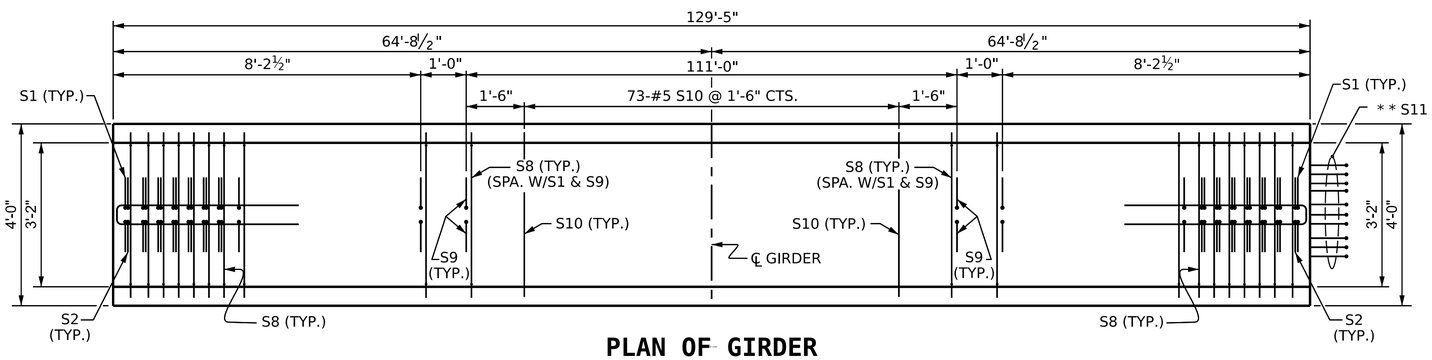

PLAN OF GIRDER

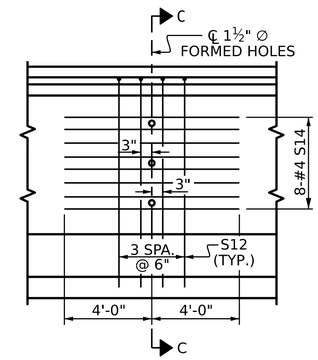

PARTIAL ELEVATION

SHOWING INTERMEDIATE STEEL DIAPHRAGM REINFORCING STEEL FOR GIRDER Nos. 1-6

† THE PROJECTION OF THE S1 & S9 BARS VARY LINEARLY FROM 9" AT THE ENDS OF THE GIRDER TO 7" AT THE CENTERLINE OF THE GIRDER.

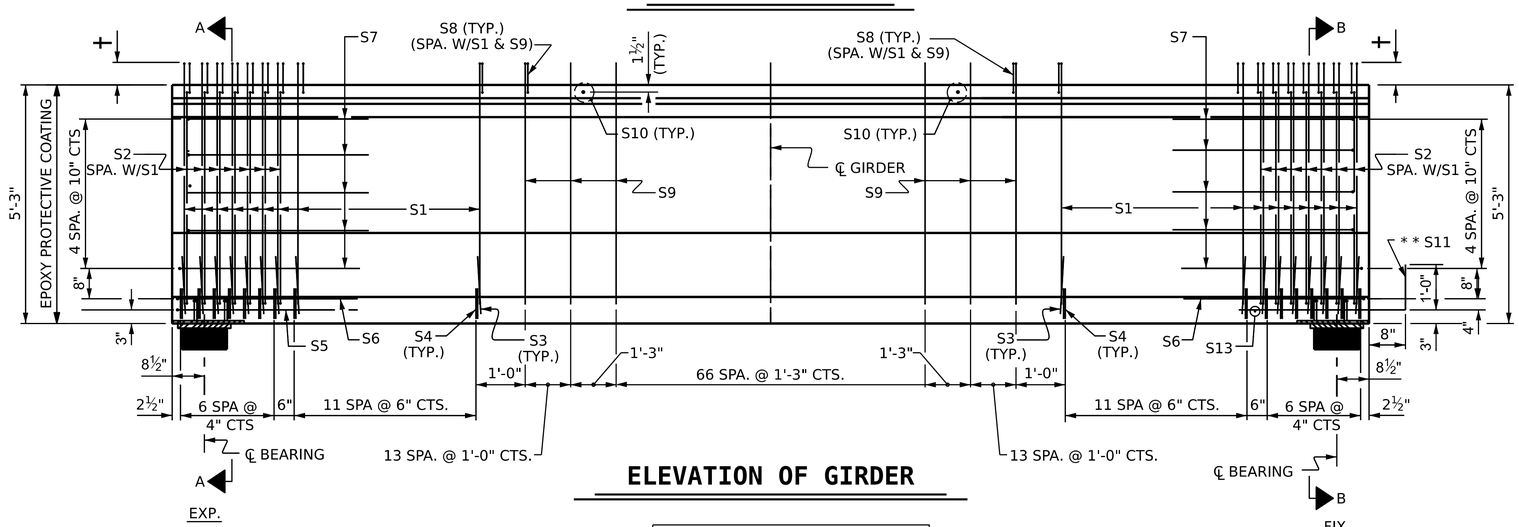

ELEVATION OF GIRDER

* NOTE:

S11 BARS SHALL BE BENT BEFORE SHIPMENT. HEAT BENDING SHALL NOT BE ALLOWED.

0.6"∅ L. R. GRADE 270 STRANDS

AREA (SQUARE INCHES)	ULTIMATE STRENGTH (LBS. PER STRAND)	APPLIED PRESTRESS (LBS. PER STRAND)
0.217	58,600	43,950

REINFORCING STEEL FOR ONE GDR

BAR	NUMBER	SIZE	TYPE	LENGTH	WEIGHT
S1	76	#5	5	6'-2"	489
S2	28	#5	4	6'-1"	178
S3	38	#3	2	3'-4"	48
S4	76	#3	1	4'-3"	121
S5	1	#5	3	10'-9"	11
S6	2	#5	3	9'-9"	20
S7	10	#4	3	8'-5"	56
S8	266	#5	7	4'-9"	1318
S9	190	#4	5	6'-2"	783
S10	73	#5	STR	3'-8"	279
* S11	10	#6	STR	4'-8"	70
S12	8	#5	6	10'-0"	83
S13	1	#3	STR	2'-10"	1
S14	16	#4	STR	8'-0"	86

BAR TYPES

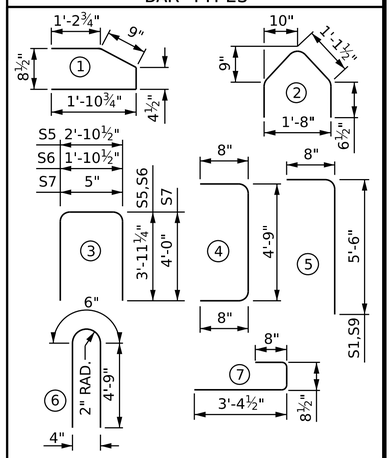

ALL BAR DIMENSIONS ARE OUT-TO-OUT

QUANTITIES FOR ONE GIRDER

REINFORCING STEEL	9,000 PSI CONCRETE	0.6" ∅ L.R. STRANDS
LB.	C.Y.	No.
3,543	33.1	66

GIRDERS REQUIRED

NUMBER	LENGTH	TOTAL LENGTH
6	129'-5"	776'-6"

PROJECT NO. B-5831

SURRY/YADKIN COUNTY

STATION: 32+28.00 -L-

SHEET 6 OF 9

NORTH CAROLINA PROFESSIONAL SEAL 20125 ENGINEER MARSHALL G. CREEK, JR.

Marshall G. Creek, Jr.

5FBCC2F3A4DC413...

9/23/2025

DOCUMENT NOT CONSIDERED FINAL UNLESS ALL SIGNATURES COMPLETED

TGS ENGINEERS
706 HILLSBOROUGH STREET
SUITE 200
RALEIGH, NC 27603
PH (919) 773-8887
CORP. LICENSE NO. C-0275

STATE OF NORTH CAROLINA
DEPARTMENT OF TRANSPORTATION
RALEIGH

63" FIB PRESTRESSED CONCRETE GIRDER CONTINUOUS FOR LIVE LOAD SPAN F

REVISIONS								SHEET NO.
NO.	BY:	DATE:	NO.	BY:	DATE:			S-23
1			3					TOTAL SHEETS
2			4					61

ASSEMBLED BY : S. B. WILLIAMS DATE : 6-24
CHECKED BY : MGC DATE : 12-24
DESIGN ENGINEER OF RECORD : STM DATE : 12-24

12/19/2024
c:\workdir\ncdot-pw.bentley.com_ncdot-pw-01\sam massinople\d0166590\B-5831-SMU-PS-850006.dgn
smassinople

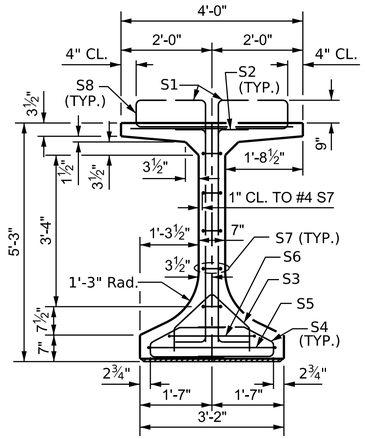

SECTION A-A

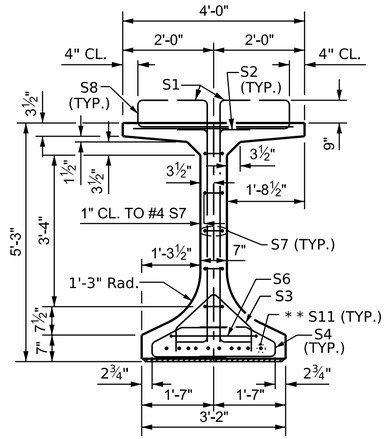

SECTION B-B

* * FOR S11 BARS, SEE DETAIL "C" OF PRESTRESSED CONCRETE GIRDER CONTINUOUS FOR LIVE LOAD DETAILS SHEET 8 OF 9.

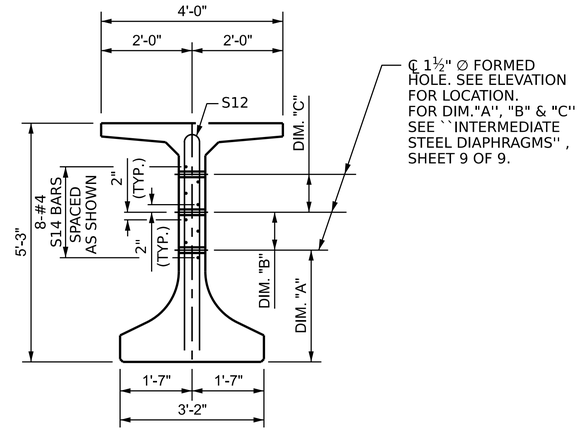

SECTION C-C

(S8, S9 AND S10 BARS NOT SHOWN)

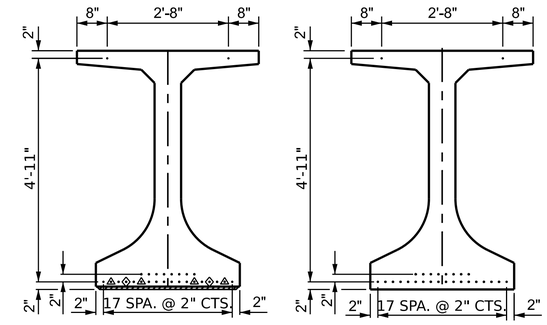

0.6" ∅ LOW RELAXATION STRAND LAYOUT

DEBONDING LEGEND

- ● FULLY BONDED STRANDS
- ◇ STRANDS DEBONDED FOR 4'-0" FROM END OF GIRDER
- △ STRANDS DEBONDED FOR 8'-0" FROM END OF GIRDER

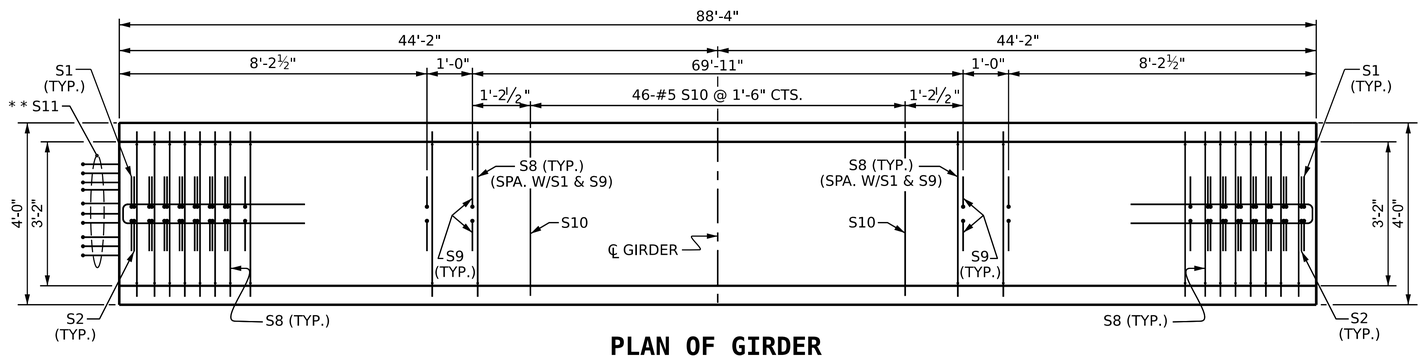

PLAN OF GIRDER

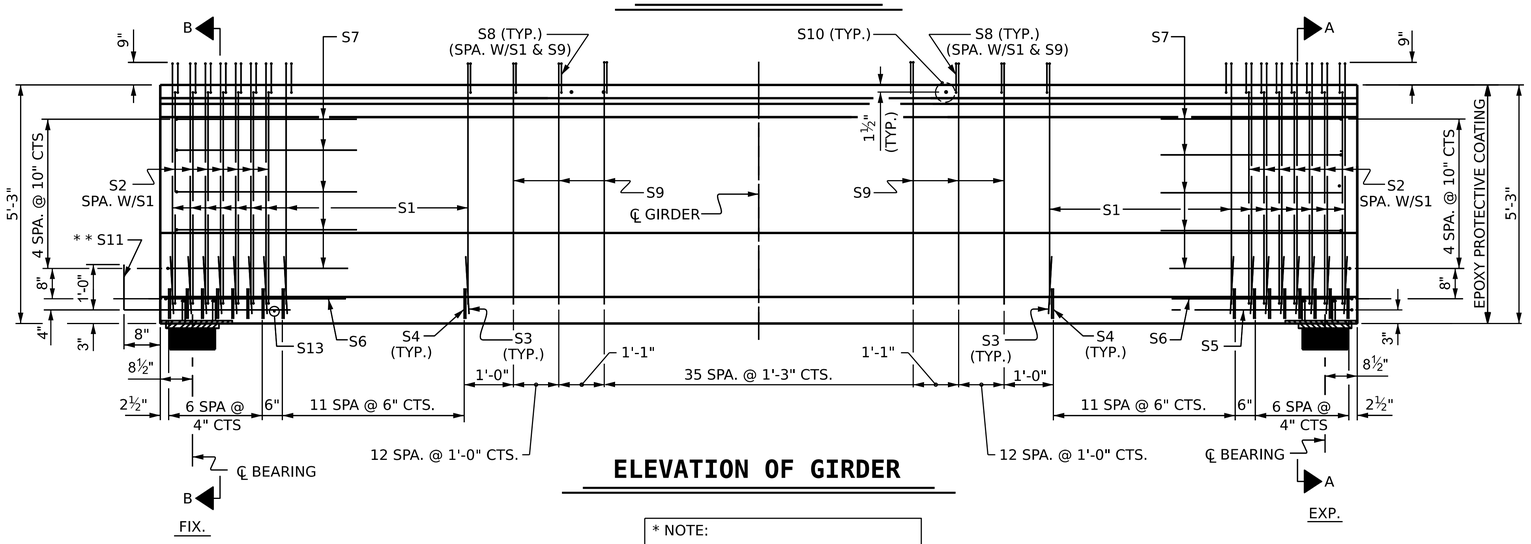

ELEVATION OF GIRDER

* NOTE:

S11 BARS SHALL BE BENT BEFORE SHIPMENT. HEAT BENDING SHALL NOT BE ALLOWED.

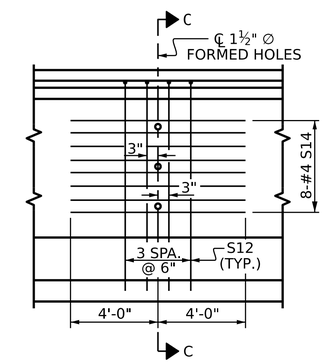

PARTIAL ELEVATION

SHOWING INTERMEDIATE STEEL DIAPHRAGM REINFORCING STEEL FOR GIRDER Nos. 1-6

0.6"∅ L. R. GRADE 270 STRANDS

AREA (SQUARE INCHES)	ULTIMATE STRENGTH (LBS. PER STRAND)	APPLIED PRESTRESS (LBS. PER STRAND)
0.217	58,600	43,950

REINFORCING STEEL FOR ONE GDR

BAR	NUMBER	SIZE	TYPE	LENGTH	WEIGHT
S1	76	#5	5	6'-2"	489
S2	28	#5	4	6'-1"	178
S3	38	#3	2	3'-4"	48
S4	76	#3	1	4'-3"	121
S5	1	#5	3	10'-9"	11
S6	2	#5	3	9'-9"	20
S7	10	#4	3	8'-5"	56
S8	200	#5	7	4'-9"	991
S9	124	#4	4	6'-2"	511
S10	46	#5	STR	3'-8"	176
* S11	10	#6	STR	4'-8"	70
S12	4	#5	6	10'-0"	42
S13	1	#3	STR	2'-10"	1
S14	8	#4	STR	8'-0"	43

BAR TYPES

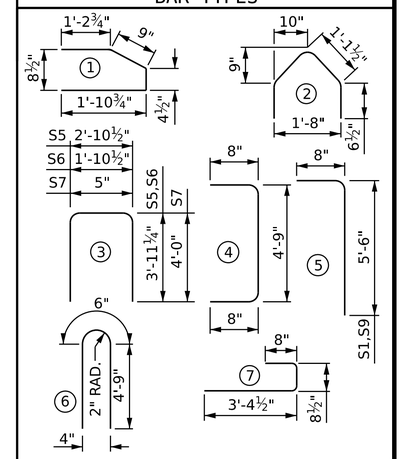

ALL BAR DIMENSIONS ARE OUT-TO-OUT

QUANTITIES FOR ONE GIRDER

REINFORCING STEEL	7,500 PSI CONCRETE	0.6" ∅ L.R. STRANDS
LB.	C.Y.	No.
2,757	22.6	28

GIRDERS REQUIRED

NUMBER	LENGTH	TOTAL LENGTH
6	88'-4"	530'-0"

PROJECT NO. B-5831

SURRY/YADKIN COUNTY

STATION: 32+28.00 -L-

SHEET 7 OF 9

NORTH CAROLINA PROFESSIONAL SEAL 20125 ENGINEER MARSHALL G. CHEEK, JR.

Signed by: Marshall G. Cheek, Jr.
5FBCC2F3A4DC413...
9/23/2025

DOCUMENT NOT CONSIDERED FINAL UNLESS ALL SIGNATURES COMPLETED

TGS ENGINEERS
706 HILLSBOROUGH STREET
SUITE 200
RALEIGH, NC 27603
PH (919) 773-8887
CORP. LICENSE NO.: C-0275

STATE OF NORTH CAROLINA
DEPARTMENT OF TRANSPORTATION
RALEIGH

63" FIB PRESTRESSED CONCRETE GIRDER CONTINUOUS FOR LIVE LOAD SPAN G

REVISIONS							
NO.	BY:	DATE:	NO.	BY:	DATE:	SHEET NO.	S-24
1			3			TOTAL SHEETS	61
2			4				

ASSEMBLED BY : S. B. WILLIAMS DATE : 6-24
CHECKED BY : MGC DATE : 12-24
DESIGN ENGINEER OF RECORD : STM DATE : 12-24

12/19/2024
c:\workdir\ncdot-pw.bentley.com_ncdot-pw-01\sam massinople\d0166590\B-5831-SMU-PS-850006.dgn
smassinople

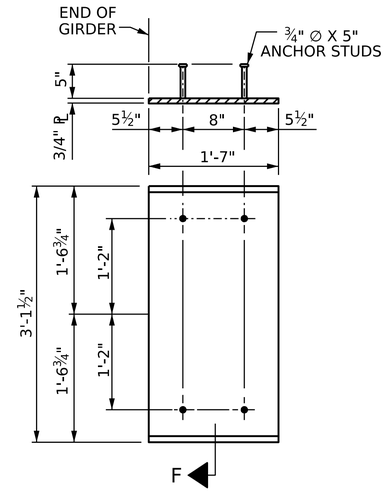

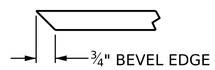

SECTION "F"

(SEE NOTES)

EMBEDDED PLATE "B-1" DETAILS FOR FIB GIRDER

(2 REQ'D PER GIRDER)

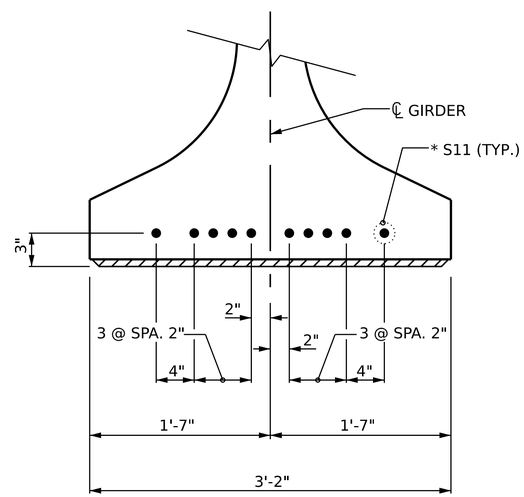

DETAIL "C"

NOTES

ALL PRESTRESSING STRANDS SHALL BE 7-WIRE LOW-RELAXATION GRADE 270 STRANDS AND SHALL CONFORM TO AASHTO M203 EXCEPT FOR SAMPLING REQUIREMENTS WHICH SHALL BE IN ACCORDANCE WITH THE STANDARD SPECIFICATIONS.

ALL REINFORCING STEEL SHALL BE GRADE 60.

APPLY EPOXY PROTECTIVE COATING TO END OF GIRDER SURFACES INDICATED IN ELEVATION VIEW.

EMBEDDED PLATE ``B-1'' SHALL BE GALVANIZED IN ACCORDANCE WITH THE STANDARD SPECIFICATIONS.

ANCHOR STUDS SHALL CONFORM TO AASHTO M169 GRADES 1010 THROUGH 1020 0R APPROVED EQUAL, AND SHALL MEET THE TYPE ``B'' REQUIREMENTS OF SUBSECTION 7.3 OF THE ANSI/AASHTO/AWS D1.5 BRIDGE WELDING CODE.

AT ENDS OF GIRDERS TO BE EMBEDDED IN CONCRETE DIAPHRAGMS OR END WALLS, PRESTRESSING STRANDS MAY EXTEND A MAXIMUM OF 2" BEYOND THE GIRDER ENDS. OTHERWISE, PRESTRESSING STRANDS SHALL BE CUT FLUSH WITH THE GIRDER ENDS.

THE TRANSFER OF LOAD FROM THE ANCHORAGES TO THE GIRDER SHALL BE DONE WHEN CONCRETE HAS REACHED A COMPRESSIVE STRENGTH OF NOT LESS THAN 5500 PSI FOR SPANS A & G, AND 7000 PSI FOR SPANS B THRU F.

DEPENDING ON THE TYPE OF SYSTEM USED TO SUPPORT THE DECK SLAB FORMS, PRESET ANCHORS MAY BE NECESSARY IN THE PRESTRESSED CONCRETE GIRDER.

THE TOP SURFACE OF THE GIRDER, EXCLUDING THE OUTSIDE 4", SHALL BE RAKED TO A DEPTH OF ¼".

PROJECT NO. B-5831
SURRY/YADKIN COUNTY
STATION: 32+28.00 -L-

SHEET 8 OF 9

NORTH CAROLINA PROFESSIONAL SEAL 20125 ENGINEER MARSHALL G. CHEEK, JR.
Marshall G. Cheek, Jr.
5FBCC2F3A4DC413...
9/23/2025

DOCUMENT NOT CONSIDERED FINAL UNLESS ALL SIGNATURES COMPLETED

TGS ENGINEERS
706 HILLSBOROUGH STREET
SUITE 200
RALEIGH, NC 27603
PH (919) 773-8887
CORP. LICENSE NO.: C-0275

STATE OF NORTH CAROLINA
DEPARTMENT OF TRANSPORTATION
RALEIGH

STANDARD

63" FIB DETAILS

REVISIONS								SHEET NO.
NO.	BY:	DATE:	NO.	BY:	DATE:			S-25
1			3					TOTAL SHEETS
2			4					61

ASSEMBLED BY : S. B. WILLIAMS DATE : 7-24
CHECKED BY : MGC DATE : 8-24

DRAWN BY : BNB 08/21
CHECKED BY : AAI 10/21

12/19/2024
c:\workdir\ncdot-pw.bentley.com_ncdot-pw-01\sam massinople\d0166590\B-5831-SMU-PS-850006.dgn
smassinople

STD.NO. FIB SHT. 1A

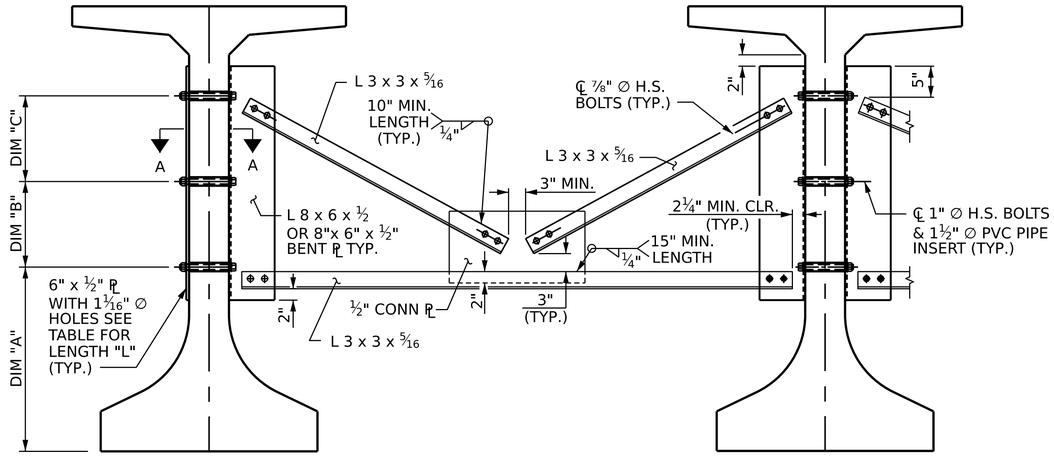

PART SECTION AT INTERMEDIATE DIAPHRAGM

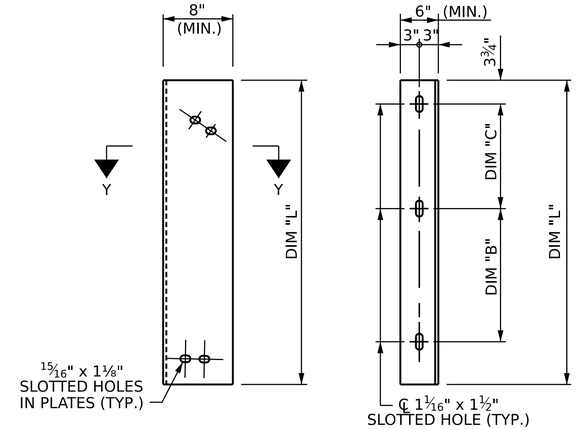

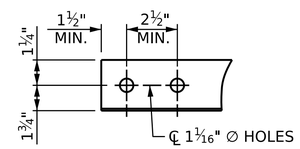

ANGLE END

(L 3 x 3 x 5/16)

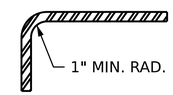

SECTION Y-Y

CONNECTOR PLATE DETAIL

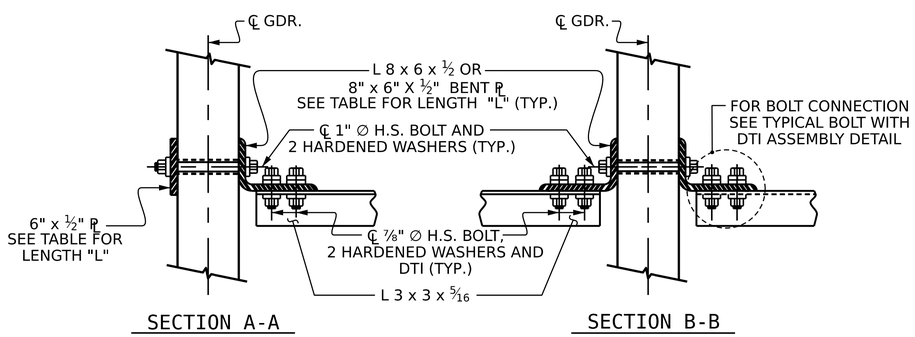

CONNECTION DETAILS

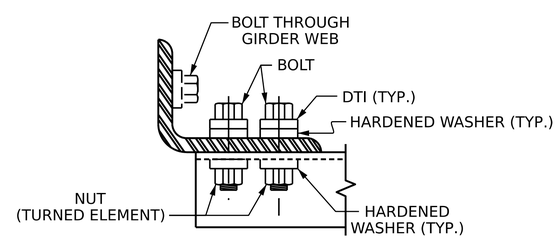

BOLT WITH DTI ASSEMBLY DETAIL

STRUCTURAL STEEL NOTES

ALL INTERMEDIATE DIAPHRAGM STEEL AND CONNECTOR PLATES SHALL BE AASHTO M270 GRADE 50 OR APPROVED EQUAL.

TENSION ON THE ASTM A325 BOLTS THROUGH THE ANGLE MEMBER SHALL BE CALIBRATED USING DIRECT TENSION INDICATOR WASHERS IN ACCORDANCE WITH THE STANDARD SPECIFICATIONS.

TENSION ON THE ASTM A449 BOLTS THROUGH THE GIRDER WEB SHALL BE SNUG TIGHTENED FOLLOWED BY AN ADDITIONAL 1/4 TURN.

THE PLATES, BENT PLATES, AND ANGLES SHALL BE GALVANIZED OR METALLIZED IN ACCORDANCE WITH THE STANDARD SPECIFICATIONS. FOR THERMAL SPRAYED COATINGS (METALLIZATION), SEE SPECIAL PROVISIONS.

FOR METALLIZATION, APPLY A THERMAL SPRAYED COATING WITH A SEAL COAT TO ALL STEEL DIAPHRAGM SURFACES IN ACCORDANCE WITH THE DEPARTMENTS THERMAL SPRAYED COATINGS (METALLIZATION) PROGRAM, THERMAL SPRAYED COATINGS SPECIAL PROVISION AND SECTION 442 OF THE STANDARD SPECIFICATIONS.

GALVANIZE THE HIGH STRENGTH BOLTS, NUTS, WASHERS AND DIRECT TENSION INDICATORS IN ACCORDANCE WITH THE STANDARD SPECIFICATIONS.

USE AN ASTM F436 HARDENED WASHER WITH STANDARD AND SLOTTED HOLES UNDER EACH BOLT HEAD AND NUT.

FOR BOLTS THROUGH THE GIRDER WEB, PROVIDE SUFFICIENT LENGTH OF THREADS ON ALL BOLTS TO ACCOMMODATE WASHERS AND THE THICKNESS OF CONNECTING MEMBER PLUS AT LEAST 1/4" PROJECTION BEYOND THE NUT.

INTERMEDIATE DIAPHRAGM ASSEMBLY SHALL COMPLY WITH SECTION 1072 OF THE STANDARD SPECIFICATIONS.

SUBMIT TWO SETS OF WORKING DRAWINGS FOR THE INTERMEDIATE DIAPHRAGM ASSEMBLY FOR REVIEW, COMMENTS AND ACCEPTANCE. AFTER REVIEW, COMMENTS, AND ACCEPTANCE, SUBMIT SEVEN SETS FOR DISTRIBUTION.

IN THE EXTERIOR BAYS, PLACE TEMPORARY STRUTS BETWEEN PRESTRESSED GIRDERS ADJACENT TO THE STEEL DIAPHRAGMS. STRUTS SHALL REMAIN IN PLACE 3 DAYS AFTER CONCRETE IS PLACED.

THE COST OF THE STEEL DIAPHRAGMS AND ASSEMBLIES SHALL BE INCLUDED IN THE UNIT PRICE BID FOR PRESTRESSED CONCRETE GIRDERS.

TABLE

GIRDER TYPE	DIM "A"	DIM "B"	DIM "C"	DIM "L"
63" FIB	2'-2"	10"	8"	2'-2"

PROJECT NO. B-5831

SURRY/YADKIN COUNTY

STATION: 32+28.00 -L-

SHEET 9 OF 9

NORTH CAROLINA PROFESSIONAL SEAL 20125 ENGINEER MARSHALL G. CHEEK, JR.

Marshall G. Cheek, Jr.

5FBCC2F3A4DC413...

9/23/2025

DOCUMENT NOT CONSIDERED FINAL UNLESS ALL SIGNATURES COMPLETED

TGS ENGINEERS
706 HILLSBOROUGH STREET
SUITE 200
RALEIGH, NC 27603
PH (919) 773-8887
CORP. LICENSE NO.: C-0275

STATE OF NORTH CAROLINA
DEPARTMENT OF TRANSPORTATION
RALEIGH

STANDARD

INTERMEDIATE STEEL DIAPHRAGMS FOR 63" FIB

REVISIONS							
NO.	BY:	DATE:	NO.	BY:	DATE:		
1			3				
2			4				

SHEET NO. S-26

TOTAL SHEETS 61

STD. NO. FIB DIAPH

ASSEMBLED BY : S. B. WILLIAMS DATE : 7-24
CHECKED BY : MGC DATE : 7-24

12/19/2024
c:\workdir\ncdot-pw.bentley.com_ncdot-pw-01\sam massinople\d0166590\B-5831-SMU-PS-850006.dgn
smassinople

DEAD LOAD DEFLECTION TABLE FOR GIRDER

0.6" Ø LOW RELAXATION STRANDS — SPAN B — GIRDERS 1 & 6

FOURTIETH POINTS		℄ BRG.	0.025	0.050	0.075	0.100	0.125	0.150	0.175	0.200	0.225	0.250	0.275	0.300	0.325	0.350	0.375	0.400	0.425	0.450	0.475	0.500	0.525	0.550	0.575	0.600	0.625	0.650	0.675	0.700	0.725	0.750	0.775	0.800	0.825	0.850	0.875	0.900	0.925	0.950	0.975	℄ BRG.
CAMBER (GIRDER ALONE IN PLACE)	↑	0.000	0.038	0.077	0.115	0.153	0.180	0.207	0.233	0.260	0.278	0.296	0.314	0.333	0.343	0.353	0.364	0.374	0.377	0.381	0.384	0.387	0.384	0.381	0.377	0.374	0.364	0.353	0.343	0.333	0.314	0.296	0.278	0.260	0.233	0.207	0.180	0.153	0.115	0.077	0.038	0.000
✱ DEFLECTION DUE TO SUPERIMPOSED D.L.	↓	0.000	0.020	0.040	0.060	0.080	0.099	0.118	0.137	0.156	0.171	0.186	0.200	0.215	0.225	0.234	0.244	0.253	0.256	0.260	0.263	0.266	0.263	0.260	0.256	0.253	0.244	0.234	0.225	0.215	0.200	0.186	0.171	0.156	0.137	0.118	0.099	0.080	0.060	0.040	0.020	0.000
VERTICAL CURVE ORDINATE	↓	0.000	-0.009	-0.017	-0.025	-0.032	-0.039	-0.046	-0.052	-0.057	-0.062	-0.067	-0.071	-0.075	-0.078	-0.081	-0.084	-0.086	-0.087	-0.088	-0.089	-0.089	-0.089	-0.088	-0.087	-0.086	-0.084	-0.081	-0.078	-0.075	-0.071	-0.067	-0.062	-0.057	-0.052	-0.046	-0.039	-0.032	-0.025	-0.017	-0.009	0.000
FINAL CAMBER	↑	0	1/4"	7/16	11/16"	7/8"	1"	1 1/16"	1 1/8"	1 1/4"	1 5/16"	1 5/16"	1 3/8"	1 7/16"	1 7/16"	1 7/16"	1 7/16"	1 7/16"	1 7/16"	1 7/16"	1 7/16"	1 7/16"	1 7/16"	1 7/16"	1 7/16"	1 7/16"	1 7/16"	1 7/16"	1 7/16"	1 7/16"	1 3/8"	1 5/16"	1 5/16"	1 1/4"	1 1/8"	1 1/16"	1"	7/8"	11/16"	7/16	1/4"	0

DEAD LOAD DEFLECTION TABLE FOR GIRDER

0.6" Ø LOW RELAXATION STRANDS — SPAN B — GIRDERS 2 & 5

FOURTIETH POINTS		℄ BRG.	0.025	0.050	0.075	0.100	0.125	0.150	0.175	0.200	0.225	0.250	0.275	0.300	0.325	0.350	0.375	0.400	0.425	0.450	0.475	0.500	0.525	0.550	0.575	0.600	0.625	0.650	0.675	0.700	0.725	0.750	0.775	0.800	0.825	0.850	0.875	0.900	0.925	0.950	0.975	℄ BRG.
CAMBER (GIRDER ALONE IN PLACE)	↑	0.000	0.038	0.077	0.115	0.153	0.180	0.207	0.233	0.260	0.278	0.296	0.314	0.333	0.343	0.353	0.364	0.374	0.377	0.381	0.384	0.387	0.384	0.381	0.377	0.374	0.364	0.353	0.343	0.333	0.314	0.296	0.278	0.260	0.233	0.207	0.180	0.153	0.115	0.077	0.038	0.000
✱ DEFLECTION DUE TO SUPERIMPOSED D.L.	↓	0.000	0.018	0.036	0.054	0.072	0.089	0.106	0.123	0.139	0.153	0.166	0.179	0.193	0.201	0.210	0.218	0.226	0.229	0.232	0.235	0.238	0.235	0.232	0.229	0.226	0.218	0.210	0.201	0.193	0.179	0.166	0.153	0.139	0.123	0.106	0.089	0.072	0.054	0.036	0.018	0.000
VERTICAL CURVE ORDINATE	↓	0.000	-0.009	-0.017	-0.025	-0.032	-0.039	-0.046	-0.052	-0.057	-0.062	-0.067	-0.071	-0.075	-0.078	-0.081	-0.084	-0.086	-0.087	-0.088	-0.089	-0.089	-0.089	-0.088	-0.087	-0.086	-0.084	-0.081	-0.078	-0.075	-0.071	-0.067	-0.062	-0.057	-0.052	-0.046	-0.039	-0.032	-0.025	-0.017	-0.009	0.000
FINAL CAMBER	↑	0	1/4"	1/2"	3/4"	1"	1 1/8"	1 3/16"	1 5/16"	1 7/16"	1 1/2"	1 9/16"	1 5/8"	1 11/16"	1 11/16"	1 3/4"	1 3/4"	1 3/4"	1 3/4"	1 13/16"	1 13/16"	1 13/16"	1 13/16"	1 13/16"	1 3/4"	1 3/4"	1 3/4"	1 3/4"	1 11/16"	1 11/16"	1 5/8"	1 9/16"	1 1/2"	1 7/16"	1 5/16"	1 3/16"	1 1/8"	1"	3/4"	1/2"	1/4"	0

DEAD LOAD DEFLECTION TABLE FOR GIRDER

0.6" Ø LOW RELAXATION STRANDS — SPAN B — GIRDERS 3 & 4

FOURTIETH POINTS		℄ BRG.	0.025	0.050	0.075	0.100	0.125	0.150	0.175	0.200	0.225	0.250	0.275	0.300	0.325	0.350	0.375	0.400	0.425	0.450	0.475	0.500	0.525	0.550	0.575	0.600	0.625	0.650	0.675	0.700	0.725	0.750	0.775	0.800	0.825	0.850	0.875	0.900	0.925	0.950	0.975	℄ BRG.
CAMBER (GIRDER ALONE IN PLACE)	↑	0.000	0.038	0.077	0.115	0.153	0.180	0.207	0.233	0.260	0.278	0.296	0.314	0.333	0.343	0.353	0.364	0.374	0.377	0.381	0.384	0.387	0.384	0.381	0.377	0.374	0.364	0.353	0.343	0.333	0.314	0.296	0.278	0.260	0.233	0.207	0.180	0.153	0.115	0.077	0.038	0.000
✱ DEFLECTION DUE TO SUPERIMPOSED D.L.	↓	0.000	0.017	0.035	0.052	0.069	0.085	0.102	0.118	0.134	0.147	0.160	0.173	0.186	0.194	0.202	0.210	0.218	0.221	0.223	0.226	0.229	0.226	0.223	0.221	0.218	0.210	0.202	0.194	0.186	0.173	0.160	0.147	0.134	0.118	0.102	0.085	0.069	0.052	0.035	0.017	0.000
VERTICAL CURVE ORDINATE	↓	0.000	-0.009	-0.017	-0.025	-0.032	-0.039	-0.046	-0.052	-0.057	-0.062	-0.067	-0.071	-0.075	-0.078	-0.081	-0.084	-0.086	-0.087	-0.088	-0.089	-0.089	-0.089	-0.088	-0.087	-0.086	-0.084	-0.081	-0.078	-0.075	-0.071	-0.067	-0.062	-0.057	-0.052	-0.046	-0.039	-0.032	-0.025	-0.017	-0.009	0.000
FINAL CAMBER	↑	0	1/4"	1/2"	3/4"	1"	1 1/8"	1 1/4"	1 3/8"	1 1/2"	1 9/16"	1 5/8"	1 11/16"	1 3/4"	1 13/16"	1 13/16"	1 7/8"	1 7/8"	1 7/8"	1 7/8"	1 7/8"	1 7/8"	1 7/8"	1 7/8"	1 7/8"	1 7/8"	1 7/8"	1 13/16"	1 13/16"	1 3/4"	1 11/16"	1 5/8"	1 9/16"	1 1/2"	1 3/8"	1 1/4"	1 1/8"	1"	3/4"	1/2"	1/4"	0

✱ INCLUDES FUTURE WEARING SURFACE.
ALL VALUES ARE SHOWN IN FEET (DECIMAL FORM), EXCEPT "FINAL CAMBER", WHICH IS GIVEN IN INCHES (FRACTION FORM).

DEAD LOAD DEFLECTION TABLE FOR GIRDER

0.6" Ø LOW RELAXATION STRANDS — SPAN A — GIRDERS 1 & 6

TWENTIETH POINTS		℄ BRG.	0.050	0.100	0.150	0.200	0.250	0.300	0.350	0.400	0.450	0.500	0.550	0.600	0.650	0.700	0.750	0.800	0.850	0.900	0.950	℄ BRG.
CAMBER (GIRDER ALONE IN PLACE)	↑	0.000	0.025	0.050	0.066	0.082	0.093	0.104	0.111	0.117	0.119	0.121	0.119	0.117	0.111	0.104	0.093	0.082	0.066	0.050	0.025	0.000
✱ DEFLECTION DUE TO SUPERIMPOSED D.L.	↓	0.000	0.013	0.025	0.037	0.050	0.059	0.068	0.075	0.081	0.083	0.085	0.083	0.081	0.075	0.068	0.059	0.050	0.037	0.025	0.013	0.000
VERTICAL CURVE ORDINATE	↓	0.000	-0.010	-0.018	-0.025	-0.032	-0.037	-0.042	-0.045	-0.048	-0.049	-0.050	-0.049	-0.048	-0.045	-0.042	-0.037	-0.032	-0.025	-0.018	-0.010	0.000
FINAL CAMBER	↑	0	1/8"	5/16"	5/16"	3/8"	7/16"	7/16"	7/16"	7/16"	7/16"	1/2"	7/16"	7/16"	7/16"	7/16"	7/16"	3/8"	5/16"	5/16"	1/8"	0

DEAD LOAD DEFLECTION TABLE FOR GIRDER

SPAN A — GIRDERS 2 & 5

TWENTIETH POINTS		℄ BRG.	0.050	0.100	0.150	0.200	0.250	0.300	0.350	0.400	0.450	0.500	0.550	0.600	0.650	0.700	0.750	0.800	0.850	0.900	0.950	℄ BRG.
CAMBER (GIRDER ALONE IN PLACE)	↑	0.000	0.025	0.050	0.066	0.082	0.093	0.104	0.111	0.117	0.119	0.121	0.119	0.117	0.111	0.104	0.093	0.082	0.066	0.050	0.025	0.000
✱ DEFLECTION DUE TO SUPERIMPOSED D.L.	↓	0.000	0.012	0.023	0.035	0.046	0.055	0.063	0.069	0.074	0.076	0.078	0.076	0.074	0.069	0.063	0.055	0.046	0.035	0.023	0.012	0.000
VERTICAL CURVE ORDINATE	↓	0.000	-0.010	-0.018	-0.025	-0.032	-0.037	-0.042	-0.045	-0.048	-0.049	-0.050	-0.049	-0.048	-0.045	-0.042	-0.037	-0.032	-0.025	-0.018	-0.010	0.000
FINAL CAMBER	↑	0	3/16"	5/16"	3/8"	7/16"	7/16"	1/2"	1/2"	1/2"	1/2"	1/2"	1/2"	1/2"	1/2"	1/2"	7/16"	7/16"	3/8"	5/16"	3/16"	0

DEAD LOAD DEFLECTION TABLE FOR GIRDER

SPAN A — GIRDERS 3 & 4

TWENTIETH POINTS		℄ BRG.	0.050	0.100	0.150	0.200	0.250	0.300	0.350	0.400	0.450	0.500	0.550	0.600	0.650	0.700	0.750	0.800	0.850	0.900	0.950	℄ BRG.
CAMBER (GIRDER ALONE IN PLACE)	↑	0.000	0.025	0.050	0.066	0.082	0.093	0.104	0.111	0.117	0.119	0.121	0.119	0.117	0.111	0.104	0.093	0.082	0.066	0.050	0.025	0.000
✱ DEFLECTION DUE TO SUPERIMPOSED D.L.	↓	0.000	0.011	0.023	0.033	0.044	0.053	0.061	0.066	0.072	0.074	0.076	0.074	0.072	0.066	0.061	0.053	0.044	0.033	0.023	0.011	0.000
VERTICAL CURVE ORDINATE	↓	0.000	-0.010	-0.018	-0.025	-0.032	-0.037	-0.042	-0.045	-0.048	-0.049	-0.050	-0.049	-0.048	-0.045	-0.042	-0.037	-0.032	-0.025	-0.018	-0.010	0.000
FINAL CAMBER	↑	0	3/16"	5/16"	3/8"	7/16"	1/2"	1/2"	1/2"	9/16"	9/16"	9/16"	9/16"	9/16"	1/2"	1/2"	1/2"	7/16"	3/8"	5/16"	3/16"	0

✱ INCLUDES FUTURE WEARING SURFACE.
ALL VALUES ARE SHOWN IN FEET (DECIMAL FORM), EXCEPT "FINAL CAMBER", WHICH IS GIVEN IN INCHES (FRACTION FORM).

PROJECT NO. B-5831
SURRY/YADKIN COUNTY
STATION: 32+28.00 -L-

SHEET 1 OF 4

NORTH CAROLINA PROFESSIONAL SEAL 20125 ENGINEER MASSINOPOLA G. CHEEKS, JR.
Massinopola G. Cheeks, Jr.
5FBCC2F3A4DC413...
9/23/2025

DOCUMENT NOT CONSIDERED FINAL UNLESS ALL SIGNATURES COMPLETED

TGS ENGINEERS
706 HILLSBOROUGH STREET
SUITE 200
RALEIGH, NC 27603
PH (919) 773-8887
CORP. LICENSE NO.: C-0275

STATE OF NORTH CAROLINA
DEPARTMENT OF TRANSPORTATION
RALEIGH

SUPERSTRUCTURE

DEAD LOAD DEFLECTIONS

REVISIONS							
NO.	BY:	DATE:	NO.	BY:	DATE:	SHEET NO.	S-27
1			3			TOTAL SHEETS	61
2			4				

DRAWN BY : ZCS DATE : 1/25
CHECKED BY : MGC DATE : 1/25
DESIGN ENGINEER OF RECORD: STM DATE : 1/25

2/28/2025
c:\workdir\ncdot-pw.bentley.com_ncdot-pw-01\sam massinople\d0166590\401_055_B-5831_SMU_GDR10_850006.dgn
smassinople

DEAD LOAD DEFLECTION TABLE FOR GIRDER

0.6" Ø LOW RELAXATION STRANDS — SPAN C — GIRDERS 1 & 6

FOURTIETH POINTS		℄ BRG.	0.025	0.050	0.075	0.100	0.125	0.150	0.175	0.200	0.225	0.250	0.275	0.300	0.325	0.350	0.375	0.400	0.425	0.450	0.475	0.500	0.525	0.550	0.575	0.600	0.625	0.650	0.675	0.700	0.725	0.750	0.775	0.800	0.825	0.850	0.875	0.900	0.925	0.950	0.975	℄ BRG.
CAMBER (GIRDER ALONE IN PLACE)	↑	0.000	0.031	0.061	0.092	0.123	0.145	0.168	0.190	0.213	0.227	0.242	0.257	0.272	0.280	0.288	0.297	0.305	0.308	0.311	0.313	0.316	0.313	0.311	0.308	0.305	0.297	0.288	0.280	0.272	0.257	0.242	0.227	0.213	0.190	0.168	0.145	0.123	0.092	0.061	0.031	0.000
✱ DEFLECTION DUE TO SUPERIMPOSED D.L.	↓	0.000	0.017	0.034	0.051	0.068	0.084	0.100	0.116	0.132	0.144	0.157	0.170	0.182	0.190	0.198	0.206	0.214	0.217	0.220	0.222	0.225	0.222	0.220	0.217	0.214	0.206	0.198	0.190	0.182	0.170	0.157	0.144	0.132	0.116	0.100	0.084	0.068	0.051	0.034	0.017	0.000
VERTICAL CURVE ORDINATE	↓	0.000	-0.008	-0.016	-0.023	-0.030	-0.036	-0.042	-0.047	-0.053	-0.057	-0.062	-0.066	-0.069	-0.072	-0.075	-0.077	-0.079	-0.080	-0.081	-0.082	-0.082	-0.082	-0.081	-0.080	-0.079	-0.077	-0.075	-0.072	-0.069	-0.066	-0.062	-0.057	-0.053	-0.047	-0.042	-0.036	-0.030	-0.023	-0.016	-0.008	0.000
FINAL CAMBER	↑	0	3/16"	5/16"	1/2"	11/16"	3/4"	13/16"	7/8"	1"	1"	1"	1 1/16"	1 1/16"	1 1/16"	1 1/16"	1 1/16"	1 1/16"	1 1/16"	1 1/16"	1 1/16"	1 1/16"	1 1/16"	1 1/16"	1 1/16"	1 1/16"	1 1/16"	1 1/16"	1 1/16"	1 1/16"	1 1/16"	1"	1"	1"	7/8"	13/16"	3/4"	11/16"	1/2"	5/16"	3/16"	0

DEAD LOAD DEFLECTION TABLE FOR GIRDER

0.6" Ø LOW RELAXATION STRANDS — SPAN C — GIRDERS 2 & 5

FOURTIETH POINTS		℄ BRG.	0.025	0.050	0.075	0.100	0.125	0.150	0.175	0.200	0.225	0.250	0.275	0.300	0.325	0.350	0.375	0.400	0.425	0.450	0.475	0.500	0.525	0.550	0.575	0.600	0.625	0.650	0.675	0.700	0.725	0.750	0.775	0.800	0.825	0.850	0.875	0.900	0.925	0.950	0.975	℄ BRG.
CAMBER (GIRDER ALONE IN PLACE)	↑	0.000	0.031	0.061	0.092	0.123	0.145	0.168	0.190	0.213	0.227	0.242	0.257	0.272	0.280	0.288	0.297	0.305	0.308	0.311	0.313	0.316	0.313	0.311	0.308	0.305	0.297	0.288	0.280	0.272	0.257	0.242	0.227	0.213	0.190	0.168	0.145	0.123	0.092	0.061	0.031	0.000
✱ DEFLECTION DUE TO SUPERIMPOSED D.L.	↓	0.000	0.015	0.030	0.045	0.061	0.075	0.089	0.104	0.118	0.129	0.141	0.152	0.163	0.170	0.177	0.185	0.192	0.194	0.197	0.199	0.202	0.199	0.197	0.194	0.192	0.185	0.177	0.170	0.163	0.152	0.141	0.129	0.118	0.104	0.089	0.075	0.061	0.045	0.030	0.015	0.000
VERTICAL CURVE ORDINATE	↓	0.000	-0.008	-0.016	-0.023	-0.030	-0.036	-0.042	-0.047	-0.053	-0.057	-0.062	-0.066	-0.069	-0.072	-0.075	-0.077	-0.079	-0.080	-0.081	-0.082	-0.082	-0.082	-0.081	-0.080	-0.079	-0.077	-0.075	-0.072	-0.069	-0.066	-0.062	-0.057	-0.053	-0.047	-0.042	-0.036	-0.030	-0.023	-0.016	-0.008	0.000
FINAL CAMBER	↑	0	3/16"	3/8"	9/16"	3/4"	7/8"	15/16"	1 1/16"	1 1/8"	1 3/16"	1 1/4"	1 1/4"	1 5/16"	1 5/16"	1 5/16"	1 3/8"	1 3/8"	1 3/8"	1 3/8"	1 3/8"	1 3/8"	1 3/8"	1 3/8"	1 3/8"	1 3/8"	1 3/8"	1 5/16"	1 5/16"	1 5/16"	1 1/4"	1 1/4"	1 3/16"	1 1/8"	1 1/16"	15/16"	7/8"	3/4"	9/16"	3/8"	3/16"	0

DEAD LOAD DEFLECTION TABLE FOR GIRDER

0.6" Ø LOW RELAXATION STRANDS — SPAN C — GIRDERS 3 & 4

FOURTIETH POINTS		℄ BRG.	0.025	0.050	0.075	0.100	0.125	0.150	0.175	0.200	0.225	0.250	0.275	0.300	0.325	0.350	0.375	0.400	0.425	0.450	0.475	0.500	0.525	0.550	0.575	0.600	0.625	0.650	0.675	0.700	0.725	0.750	0.775	0.800	0.825	0.850	0.875	0.900	0.925	0.950	0.975	℄ BRG.
CAMBER (GIRDER ALONE IN PLACE)	↑	0.000	0.031	0.061	0.092	0.123	0.145	0.168	0.190	0.213	0.227	0.242	0.257	0.272	0.280	0.288	0.297	0.305	0.308	0.311	0.313	0.316	0.313	0.311	0.308	0.305	0.297	0.288	0.280	0.272	0.257	0.242	0.227	0.213	0.190	0.168	0.145	0.123	0.092	0.061	0.031	0.000
✱ DEFLECTION DUE TO SUPERIMPOSED D.L.	↓	0.000	0.015	0.029	0.044	0.058	0.072	0.086	0.100	0.114	0.124	0.135	0.146	0.157	0.164	0.171	0.178	0.185	0.187	0.189	0.192	0.194	0.192	0.189	0.187	0.185	0.178	0.171	0.164	0.157	0.146	0.135	0.124	0.114	0.100	0.086	0.072	0.058	0.044	0.029	0.015	0.000
VERTICAL CURVE ORDINATE	↓	0.000	-0.008	-0.016	-0.023	-0.030	-0.036	-0.042	-0.047	-0.053	-0.057	-0.062	-0.066	-0.069	-0.072	-0.075	-0.077	-0.079	-0.080	-0.081	-0.082	-0.082	-0.082	-0.081	-0.080	-0.079	-0.077	-0.075	-0.072	-0.069	-0.066	-0.062	-0.057	-0.053	-0.047	-0.042	-0.036	-0.030	-0.023	-0.016	-0.008	0.000
FINAL CAMBER	↑	0	3/16"	3/8"	9/16"	3/4"	7/8"	1"	1 1/16"	1 3/16"	1 1/4"	1 5/16"	1 5/16"	1 3/8"	1 3/8"	1 7/16"	1 7/16"	1 7/16"	1 7/16"	1 7/16"	1 7/16"	1 7/16"	1 7/16"	1 7/16"	1 7/16"	1 7/16"	1 7/16"	1 7/16"	1 3/8"	1 3/8"	1 5/16"	1 5/16"	1 1/4"	1 3/16"	1 1/16"	1"	7/8"	3/4"	9/16"	3/8"	3/16"	0

✱ INCLUDES FUTURE WEARING SURFACE.
ALL VALUES ARE SHOWN IN FEET (DECIMAL FORM), EXCEPT "FINAL CAMBER", WHICH IS GIVEN IN INCHES (FRACTION FORM).

DEAD LOAD DEFLECTION TABLE FOR GIRDER

0.6" Ø LOW RELAXATION STRANDS — SPAN D — GIRDERS 1 & 6

FOURTIETH POINTS		℄ BRG.	0.025	0.050	0.075	0.100	0.125	0.150	0.175	0.200	0.225	0.250	0.275	0.300	0.325	0.350	0.375	0.400	0.425	0.450	0.475	0.500	0.525	0.550	0.575	0.600	0.625	0.650	0.675	0.700	0.725	0.750	0.775	0.800	0.825	0.850	0.875	0.900	0.925	0.950	0.975	℄ BRG.
CAMBER (GIRDER ALONE IN PLACE)	↑	0.000	0.044	0.087	0.131	0.175	0.207	0.240	0.272	0.305	0.327	0.348	0.370	0.392	0.404	0.416	0.428	0.441	0.445	0.449	0.452	0.456	0.452	0.449	0.445	0.441	0.428	0.416	0.404	0.392	0.370	0.348	0.327	0.305	0.272	0.240	0.207	0.175	0.131	0.087	0.044	0.000
✱ DEFLECTION DUE TO SUPERIMPOSED D.L.	↓	0.000	0.023	0.047	0.070	0.093	0.115	0.137	0.159	0.182	0.199	0.216	0.233	0.251	0.262	0.273	0.284	0.295	0.298	0.302	0.306	0.310	0.306	0.302	0.298	0.295	0.284	0.273	0.262	0.251	0.233	0.216	0.199	0.182	0.159	0.137	0.115	0.093	0.070	0.047	0.023	0.000
VERTICAL CURVE ORDINATE	↓	0.000	-0.009	-0.018	-0.027	-0.035	-0.042	-0.049	-0.056	-0.062	-0.067	-0.072	-0.077	-0.081	-0.084	-0.088	-0.090	-0.092	-0.094	-0.095	-0.096	-0.096	-0.096	-0.095	-0.094	-0.092	-0.090	-0.088	-0.084	-0.081	-0.077	-0.072	-0.067	-0.062	-0.056	-0.049	-0.042	-0.035	-0.027	-0.018	-0.009	0.000
FINAL CAMBER	↑	0	1/4"	1/2"	3/4"	1"	1 1/8"	1 1/4"	1 3/8"	1 1/2"	1 9/16"	1 9/16"	1 5/8"	1 11/16"	1 11/16"	1 3/4"	1 3/4"	1 3/4"	1 3/4"	1 3/4"	1 3/4"	1 3/4"	1 3/4"	1 3/4"	1 3/4"	1 3/4"	1 3/4"	1 3/4"	1 11/16"	1 11/16"	1 5/8"	1 9/16"	1 9/16"	1 1/2"	1 3/8"	1 1/4"	1 1/8"	1"	3/4"	1/2"	1/4"	0

DEAD LOAD DEFLECTION TABLE FOR GIRDER

0.6" Ø LOW RELAXATION STRANDS — SPAN D — GIRDERS 2 & 5

FOURTIETH POINTS		℄ BRG.	0.025	0.050	0.075	0.100	0.125	0.150	0.175	0.200	0.225	0.250	0.275	0.300	0.325	0.350	0.375	0.400	0.425	0.450	0.475	0.500	0.525	0.550	0.575	0.600	0.625	0.650	0.675	0.700	0.725	0.750	0.775	0.800	0.825	0.850	0.875	0.900	0.925	0.950	0.975	℄ BRG.
CAMBER (GIRDER ALONE IN PLACE)	↑	0.000	0.044	0.087	0.131	0.175	0.207	0.240	0.272	0.305	0.327	0.348	0.370	0.392	0.404	0.416	0.428	0.441	0.445	0.449	0.452	0.456	0.452	0.449	0.445	0.441	0.428	0.416	0.404	0.392	0.370	0.348	0.327	0.305	0.272	0.240	0.207	0.175	0.131	0.087	0.044	0.000
✱ DEFLECTION DUE TO SUPERIMPOSED D.L.	↓	0.000	0.021	0.042	0.063	0.084	0.103	0.123	0.143	0.163	0.178	0.193	0.209	0.224	0.234	0.244	0.254	0.264	0.267	0.270	0.274	0.277	0.274	0.270	0.267	0.264	0.254	0.244	0.234	0.224	0.209	0.193	0.178	0.163	0.143	0.123	0.103	0.084	0.063	0.042	0.021	0.000
VERTICAL CURVE ORDINATE	↓	0.000	-0.009	-0.018	-0.027	-0.035	-0.042	-0.049	-0.056	-0.062	-0.067	-0.072	-0.077	-0.081	-0.084	-0.088	-0.090	-0.092	-0.094	-0.095	-0.096	-0.096	-0.096	-0.095	-0.094	-0.092	-0.090	-0.088	-0.084	-0.081	-0.077	-0.072	-0.067	-0.062	-0.056	-0.049	-0.042	-0.035	-0.027	-0.018	-0.009	0.000
FINAL CAMBER	↑	0	1/4"	9/16"	13/16"	1 1/16"	1 1/4"	1 3/8"	1 9/16"	1 11/16"	1 13/16"	1 7/8"	1 15/16"	2"	2 1/16"	2 1/16"	2 1/16"	2 1/8"	2 1/8"	2 1/8"	2 1/8"	2 1/8"	2 1/8"	2 1/8"	2 1/8"	2 1/8"	2 1/16"	2 1/16"	2 1/16"	2"	1 15/16"	1 7/8"	1 13/16"	1 11/16"	1 9/16"	1 3/8"	1 1/4"	1 1/16"	13/16"	9/16"	1/4"	0

✱ INCLUDES FUTURE WEARING SURFACE.
ALL VALUES ARE SHOWN IN FEET (DECIMAL FORM), EXCEPT "FINAL CAMBER", WHICH IS GIVEN IN INCHES (FRACTION FORM).

PROJECT NO. B-5831
SURRY/YADKIN COUNTY
STATION: 32+28.00 -L-

SHEET 2 OF 4

NORTH CAROLINA PROFESSIONAL SEAL 20125 ENGINEER MARSHALL C. CHECK, JR.
Signature: Marshall C. Check, Jr.
SFBCC2F3A1DC413...
9/23/2025

DOCUMENT NOT CONSIDERED FINAL UNLESS ALL SIGNATURES COMPLETED

TGS ENGINEERS
706 HILLSBOROUGH STREET
SUITE 200
RALEIGH, NC 27603
PH (919) 773-8887
CORP. LICENSE NO.: C-0275

STATE OF NORTH CAROLINA
DEPARTMENT OF TRANSPORTATION
RALEIGH

SUPERSTRUCTURE

DEAD LOAD DEFLECTIONS

REVISIONS						
NO.	BY:	DATE:	NO.	BY:	DATE:	
1			3			
2			4			

SHEET NO. S-28
TOTAL SHEETS 61

DRAWN BY : ZCS DATE : 1/25
CHECKED BY : MGC DATE : 1/25
DESIGN ENGINEER OF RECORD: STM DATE : 1/25

2/25/2025
c:\workdir\ncdot-pw.bentley.com_ncdot-pw-01\sam massinople\d0166590\401_057_B-5831_SMU_GDR11_850006.dgn
smassinople

DEAD LOAD DEFLECTION TABLE FOR GIRDER

0.6"Ø LOW RELAXATION STRANDS — SPAN D — GIRDERS 3 & 4

FOURTIETH POINTS		℄ BRG.	0.025	0.050	0.075	0.100	0.125	0.150	0.175	0.200	0.225	0.250	0.275	0.300	0.325	0.350	0.375	0.400	0.425	0.450	0.475	0.500	0.525	0.550	0.575	0.600	0.625	0.650	0.675	0.700	0.725	0.750	0.775	0.800	0.825	0.850	0.875	0.900	0.925	0.950	0.975	℄ BRG.
CAMBER (GIRDER ALONE IN PLACE)	↑	0.000	0.044	0.087	0.131	0.175	0.207	0.240	0.272	0.305	0.327	0.348	0.370	0.392	0.404	0.416	0.428	0.441	0.445	0.449	0.452	0.456	0.452	0.449	0.445	0.441	0.428	0.416	0.404	0.392	0.370	0.348	0.327	0.305	0.272	0.240	0.207	0.175	0.131	0.087	0.044	0.000
✱ DEFLECTION DUE TO SUPERIMPOSED D.L.	↓	0.000	0.020	0.040	0.060	0.081	0.100	0.119	0.138	0.157	0.171	0.186	0.201	0.216	0.225	0.235	0.244	0.254	0.257	0.260	0.264	0.267	0.264	0.260	0.257	0.254	0.244	0.235	0.225	0.216	0.201	0.186	0.171	0.157	0.138	0.119	0.100	0.081	0.060	0.040	0.020	0.000
VERTICAL CURVE ORDINATE	↓	0.000	-0.009	-0.018	-0.027	-0.035	-0.042	-0.049	-0.056	-0.062	-0.067	-0.072	-0.077	-0.081	-0.084	-0.088	-0.090	-0.092	-0.094	-0.095	-0.096	-0.096	-0.096	-0.095	-0.094	-0.092	-0.090	-0.088	-0.084	-0.081	-0.077	-0.072	-0.067	-0.062	-0.056	-0.049	-0.042	-0.035	-0.027	-0.018	-0.009	0.000
FINAL CAMBER	↑	0	5/16"	9/16"	7/8"	1 1/8"	1 5/16"	1 7/16"	1 5/8"	1 3/4"	1 7/8"	1 15/16"	2"	2 1/8"	2 1/8"	2 3/16"	2 3/16"	2 1/4"	2 1/4"	2 1/4"	2 1/4"	2 1/4"	2 1/4"	2 1/4"	2 1/4"	2 1/4"	2 3/16"	2 3/16"	2 1/8"	2 1/8"	2"	1 15/16"	1 7/8"	1 3/4"	1 5/8"	1 7/16"	1 5/16"	1 1/8"	7/8"	9/16"	5/16"	0

✱ INCLUDES FUTURE WEARING SURFACE.
ALL VALUES ARE SHOWN IN FEET (DECIMAL FORM), EXCEPT "FINAL CAMBER", WHICH IS GIVEN IN INCHES (FRACTION FORM).

DEAD LOAD DEFLECTION TABLE FOR GIRDER

0.6"Ø LOW RELAXATION STRANDS — SPAN E — GIRDERS 1 & 6

FOURTIETH POINTS		℄ BRG.	0.025	0.050	0.075	0.100	0.125	0.150	0.175	0.200	0.225	0.250	0.275	0.300	0.325	0.350	0.375	0.400	0.425	0.450	0.475	0.500	0.525	0.550	0.575	0.600	0.625	0.650	0.675	0.700	0.725	0.750	0.775	0.800	0.825	0.850	0.875	0.900	0.925	0.950	0.975	℄ BRG.
CAMBER (GIRDER ALONE IN PLACE)	↑	0.000	0.038	0.077	0.115	0.154	0.180	0.207	0.233	0.260	0.278	0.296	0.315	0.333	0.343	0.353	0.364	0.374	0.377	0.381	0.384	0.387	0.384	0.381	0.377	0.374	0.364	0.353	0.343	0.333	0.315	0.296	0.278	0.260	0.233	0.207	0.180	0.154	0.115	0.077	0.038	0.000
✱ DEFLECTION DUE TO SUPERIMPOSED D.L.	↓	0.000	0.020	0.040	0.060	0.080	0.099	0.118	0.137	0.156	0.171	0.186	0.200	0.215	0.225	0.234	0.244	0.253	0.256	0.260	0.263	0.266	0.263	0.260	0.256	0.253	0.244	0.234	0.225	0.215	0.200	0.186	0.171	0.156	0.137	0.118	0.099	0.080	0.060	0.040	0.020	0.000
VERTICAL CURVE ORDINATE	↓	0.000	-0.002	-0.003	-0.004	-0.004	-0.004	-0.004	-0.004	-0.003	-0.003	-0.003	-0.003	-0.003	-0.003	-0.003	-0.003	-0.003	-0.002	-0.002	-0.002	-0.002	-0.002	-0.002	-0.002	-0.002	-0.002	-0.002	-0.001	-0.001	-0.001	-0.001	-0.001	-0.001	-0.001	-0.001	-0.001	0.000	0.000	0.000	0.000	0.000
FINAL CAMBER	↑	0	1/4"	7/16"	11/16"	7/8"	1"	1 1/16"	1 1/8"	1 1/4"	1 5/16"	1 5/16"	1 3/8"	1 7/16"	1 7/16"	1 7/16"	1 7/16"	1 7/16"	1 7/16"	1 7/16"	1 7/16"	1 7/16"	1 7/16"	1 7/16"	1 7/16"	1 7/16"	1 7/16"	1 7/16"	1 7/16"	1 7/16"	1 3/8"	1 5/16"	1 5/16"	1 1/4"	1 1/8"	1 1/16"	1"	7/8"	11/16"	7/16"	1/4"	0

DEAD LOAD DEFLECTION TABLE FOR GIRDER

0.6"Ø LOW RELAXATION STRANDS — SPAN E — GIRDERS 2 & 5

FOURTIETH POINTS		℄ BRG.	0.025	0.050	0.075	0.100	0.125	0.150	0.175	0.200	0.225	0.250	0.275	0.300	0.325	0.350	0.375	0.400	0.425	0.450	0.475	0.500	0.525	0.550	0.575	0.600	0.625	0.650	0.675	0.700	0.725	0.750	0.775	0.800	0.825	0.850	0.875	0.900	0.925	0.950	0.975	℄ BRG.
CAMBER (GIRDER ALONE IN PLACE)	↑	0.000	0.038	0.077	0.115	0.154	0.180	0.207	0.233	0.260	0.278	0.296	0.315	0.333	0.343	0.353	0.364	0.374	0.377	0.381	0.384	0.387	0.384	0.381	0.377	0.374	0.364	0.353	0.343	0.333	0.315	0.296	0.278	0.260	0.233	0.207	0.180	0.154	0.115	0.077	0.038	0.000
✱ DEFLECTION DUE TO SUPERIMPOSED D.L.	↓	0.000	0.018	0.036	0.054	0.072	0.089	0.106	0.123	0.139	0.153	0.166	0.179	0.193	0.201	0.210	0.218	0.226	0.229	0.232	0.235	0.238	0.235	0.232	0.229	0.226	0.218	0.209	0.201	0.193	0.179	0.166	0.153	0.139	0.122	0.106	0.089	0.072	0.054	0.036	0.018	0.000
VERTICAL CURVE ORDINATE	↓	0.000	-0.002	-0.003	-0.004	-0.004	-0.004	-0.004	-0.004	-0.003	-0.003	-0.003	-0.003	-0.003	-0.003	-0.003	-0.003	-0.003	-0.002	-0.002	-0.002	-0.002	-0.002	-0.002	-0.002	-0.002	-0.002	-0.002	-0.001	-0.001	-0.001	-0.001	-0.001	-0.001	-0.001	-0.001	-0.001	0.000	0.000	0.000	0.000	0.000
FINAL CAMBER	↑	0	1/4"	1/2"	3/4"	1"	1 1/8"	1 3/16"	1 5/16"	1 7/16"	1 1/2"	1 9/16"	1 5/8"	1 11/16"	1 11/16"	1 3/4"	1 3/4"	1 3/4"	1 3/4"	1 3/16"	1 13/16"	1 13/16"	1 13/16"	1 13/16"	1 3/4"	1 3/4"	1 3/4"	1 3/4"	1 11/16"	1 11/16"	1 5/8"	1 9/16"	1 1/2"	1 7/16"	1 5/16"	1 3/16"	1 1/8"	1"	3/4"	1/2"	1/4"	0

✱ INCLUDES FUTURE WEARING SURFACE.
ALL VALUES ARE SHOWN IN FEET (DECIMAL FORM), EXCEPT "FINAL CAMBER", WHICH IS GIVEN IN INCHES (FRACTION FORM).

PROJECT NO. B-5831
SURRY/YADKIN COUNTY
STATION: 32+28.00 -L-

SHEET 3 OF 4

NORTH CAROLINA PROFESSIONAL SEAL 20125 ENGINEER
MARSHALL G. CHEEK, JR.
Marshall G. Cheek, Jr.
SFBCC2F3A4DC413...
9/23/2025

DOCUMENT NOT CONSIDERED FINAL UNLESS ALL SIGNATURES COMPLETED

TGS ENGINEERS
706 HILLSBOROUGH STREET
SUITE 200
RALEIGH, NC 27603
PH (919) 773-8887
CORP. LICENSE NO.: C-0275

STATE OF NORTH CAROLINA
DEPARTMENT OF TRANSPORTATION
RALEIGH

SUPERSTRUCTURE

DEAD LOAD DEFLECTIONS

REVISIONS						
NO.	BY:	DATE:	NO.	BY:	DATE:	
1			3			
2			4			

SHEET NO. S-29
TOTAL SHEETS 61

DRAWN BY : ZCS DATE : 1/25
CHECKED BY : MGC DATE : 1/25
DESIGN ENGINEER OF RECORD: STM DATE : 1/25

2/25/2025
c:\workdir\ncdot-pw.bentley.com_ncdot-pw-01\sam massinople\d0166590\401_059_B-5831_SMU_GDR12_850006.dgn
smassinople

DEAD LOAD DEFLECTION TABLE FOR GIRDER

0.6"Ø LOW RELAXATION STRANDS — SPAN E — GIRDERS 3 & 4

FOURTIETH POINTS		℄ BRG.	0.025	0.050	0.075	0.100	0.125	0.150	0.175	0.200	0.225	0.250	0.275	0.300	0.325	0.350	0.375	0.400	0.425	0.450	0.475	0.500	0.525	0.550	0.575	0.600	0.625	0.650	0.675	0.700	0.725	0.750	0.775	0.800	0.825	0.850	0.875	0.900	0.925	0.950	0.975	℄ BRG.
CAMBER (GIRDER ALONE IN PLACE)	↑	0.000	0.038	0.077	0.115	0.154	0.180	0.207	0.233	0.260	0.278	0.296	0.315	0.333	0.343	0.353	0.364	0.374	0.377	0.381	0.384	0.387	0.384	0.381	0.377	0.374	0.364	0.353	0.343	0.333	0.315	0.296	0.278	0.260	0.233	0.207	0.180	0.154	0.115	0.077	0.038	0.000
✱ DEFLECTION DUE TO SUPERIMPOSED D.L.	↓	0.000	0.017	0.035	0.052	0.069	0.085	0.102	0.118	0.134	0.147	0.160	0.173	0.186	0.194	0.202	0.210	0.218	0.221	0.223	0.226	0.229	0.226	0.223	0.221	0.218	0.210	0.202	0.194	0.186	0.173	0.160	0.147	0.134	0.118	0.102	0.085	0.069	0.052	0.035	0.017	0.000
VERTICAL CURVE ORDINATE	↓	0.000	-0.002	-0.003	-0.004	-0.004	-0.004	-0.004	-0.004	-0.003	-0.003	-0.003	-0.003	-0.003	-0.003	-0.003	-0.003	-0.003	-0.002	-0.002	-0.002	-0.002	-0.002	-0.002	-0.002	-0.002	-0.002	-0.002	-0.001	-0.001	-0.001	-0.001	-0.001	-0.001	-0.001	-0.001	-0.001	0.000	0.000	0.000	0.000	0.000
FINAL CAMBER	↑	0	1/4"	1/2"	3/4"	1"	1 1/8"	1 1/4"	1 3/8"	1 1/2"	1 9/16"	1 5/8"	1 11/16"	1 3/4"	1 13/16"	1 13/16"	1 7/8"	1 7/8"	1 7/8"	1 7/8"	1 7/8"	1 7/8"	1 7/8"	1 7/8"	1 7/8"	1 7/8"	1 7/8"	1 13/16"	1 13/16"	1 3/4"	1 11/16"	1 5/8"	1 9/16"	1 1/2"	1 3/8"	1 1/4"	1 1/8"	1"	3/4"	1/2"	1/4"	0

✱ INCLUDES FUTURE WEARING SURFACE.
ALL VALUES ARE SHOWN IN FEET (DECIMAL FORM), EXCEPT "FINAL CAMBER", WHICH IS GIVEN IN INCHES (FRACTION FORM).

DEAD LOAD DEFLECTION TABLE FOR GIRDER

0.6"Ø LOW RELAXATION STRANDS — SPAN F — GIRDERS 1 & 6

FOURTIETH POINTS		℄ BRG.	0.025	0.050	0.075	0.100	0.125	0.150	0.175	0.200	0.225	0.250	0.275	0.300	0.325	0.350	0.375	0.400	0.425	0.450	0.475	0.500	0.525	0.550	0.575	0.600	0.625	0.650	0.675	0.700	0.725	0.750	0.775	0.800	0.825	0.850	0.875	0.900	0.925	0.950	0.975	℄ BRG.
CAMBER (GIRDER ALONE IN PLACE)	↑	0.000	0.044	0.087	0.131	0.175	0.208	0.240	0.273	0.305	0.327	0.349	0.370	0.392	0.404	0.416	0.429	0.441	0.445	0.449	0.453	0.457	0.453	0.449	0.445	0.441	0.429	0.416	0.404	0.392	0.370	0.349	0.327	0.305	0.273	0.240	0.208	0.175	0.131	0.087	0.044	0.000
✱ DEFLECTION DUE TO SUPERIMPOSED D.L.	↓	0.000	0.024	0.047	0.071	0.094	0.116	0.138	0.161	0.183	0.200	0.218	0.235	0.252	0.263	0.275	0.286	0.297	0.300	0.304	0.308	0.312	0.308	0.304	0.300	0.297	0.286	0.275	0.263	0.252	0.235	0.218	0.200	0.183	0.161	0.138	0.116	0.094	0.071	0.047	0.024	0.000
FINAL CAMBER	↑	0	1/4"	1/2"	3/4"	1"	1 1/8"	1 1/4"	1 3/8"	1 1/2"	1 1/2"	1 9/16"	1 5/8"	1 11/16"	1 11/16"	1 11/16"	1 11/16"	1 3/4"	1 3/4"	1 3/4"	1 3/4"	1 3/4"	1 3/4"	1 3/4"	1 3/4"	1 3/4"	1 11/16"	1 11/16"	1 11/16"	1 11/16"	1 5/8"	1 9/16"	1 1/2"	1 1/2"	1 3/8"	1 1/4"	1 1/8"	1"	3/4"	1/2"	1/4"	0

DEAD LOAD DEFLECTION TABLE FOR GIRDER

0.6"Ø LOW RELAXATION STRANDS — SPAN F — GIRDERS 2 & 5

FOURTIETH POINTS		℄ BRG.	0.025	0.050	0.075	0.100	0.125	0.150	0.175	0.200	0.225	0.250	0.275	0.300	0.325	0.350	0.375	0.400	0.425	0.450	0.475	0.500	0.525	0.550	0.575	0.600	0.625	0.650	0.675	0.700	0.725	0.750	0.775	0.800	0.825	0.850	0.875	0.900	0.925	0.950	0.975	℄ BRG.
CAMBER (GIRDER ALONE IN PLACE)	↑	0.000	0.044	0.087	0.131	0.175	0.208	0.240	0.273	0.305	0.327	0.349	0.370	0.392	0.404	0.416	0.429	0.441	0.445	0.449	0.453	0.457	0.453	0.449	0.445	0.441	0.429	0.416	0.404	0.392	0.370	0.349	0.327	0.305	0.273	0.240	0.208	0.175	0.131	0.087	0.044	0.000
✱ DEFLECTION DUE TO SUPERIMPOSED D.L.	↓	0.000	0.021	0.042	0.063	0.084	0.104	0.124	0.144	0.164	0.179	0.195	0.210	0.226	0.236	0.246	0.255	0.265	0.269	0.272	0.276	0.279	0.276	0.272	0.269	0.265	0.255	0.246	0.236	0.226	0.210	0.195	0.179	0.164	0.144	0.124	0.104	0.084	0.063	0.042	0.021	0.000
FINAL CAMBER	↑	0	1/4"	9/16"	13/16"	1 1/16"	1 1/4"	1 3/8"	1 9/16"	1 11/16"	1 3/4"	1 7/8"	1 15/16"	2"	2"	2 1/16"	2 1/16"	2 1/8"	2 1/8"	2 1/8"	2 1/8"	2 1/8"	2 1/8"	2 1/8"	2 1/8"	2 1/8"	2 1/16"	2 1/16"	2"	2"	1 15/16"	1 7/8"	1 3/4"	1 11/16"	1 9/16"	1 3/8"	1 1/4"	1 1/16"	13/16"	9/16"	1/4"	0

DEAD LOAD DEFLECTION TABLE FOR GIRDER

0.6"Ø LOW RELAXATION STRANDS — SPAN F — GIRDERS 3 & 4

FOURTIETH POINTS		℄ BRG.	0.025	0.050	0.075	0.100	0.125	0.150	0.175	0.200	0.225	0.250	0.275	0.300	0.325	0.350	0.375	0.400	0.425	0.450	0.475	0.500	0.525	0.550	0.575	0.600	0.625	0.650	0.675	0.700	0.725	0.750	0.775	0.800	0.825	0.850	0.875	0.900	0.925	0.950	0.975	℄ BRG.
CAMBER (GIRDER ALONE IN PLACE)	↑	0.000	0.044	0.087	0.131	0.175	0.208	0.240	0.273	0.305	0.327	0.349	0.370	0.392	0.404	0.416	0.429	0.441	0.445	0.449	0.453	0.457	0.453	0.449	0.445	0.441	0.429	0.416	0.404	0.392	0.370	0.349	0.327	0.305	0.273	0.240	0.208	0.175	0.131	0.087	0.044	0.000
✱ DEFLECTION DUE TO SUPERIMPOSED D.L.	↓	0.000	0.020	0.041	0.061	0.081	0.100	0.119	0.138	0.157	0.172	0.187	0.202	0.217	0.227	0.236	0.246	0.256	0.259	0.262	0.265	0.269	0.265	0.262	0.259	0.256	0.246	0.236	0.227	0.217	0.202	0.187	0.172	0.157	0.138	0.119	0.100	0.081	0.061	0.041	0.020	0.000
FINAL CAMBER	↑	0	5/16"	9/16"	7/8"	1 1/8"	1 5/16"	1 7/16"	1 5/8"	1 3/4"	1 7/8"	1 15/16"	2"	2 1/8"	2 1/8"	2 3/16"	2 3/16"	2 1/4"	2 1/4"	2 1/4"	2 1/4"	2 1/4"	2 1/4"	2 1/4"	2 1/4"	2 3/16"	2 3/16"	2 1/8"	2 1/8"	2"	1 15/16"	1 7/8"	1 3/4"	1 5/8"	1 7/16"	1 5/16"	1 1/8"	7/8"	9/16"	5/16"	0

✱ INCLUDES FUTURE WEARING SURFACE.
ALL VALUES ARE SHOWN IN FEET (DECIMAL FORM), EXCEPT "FINAL CAMBER", WHICH IS GIVEN IN INCHES (FRACTION FORM).

DEAD LOAD DEFLECTION TABLE FOR GIRDER

0.6"Ø LOW RELAXATION STRANDS — SPAN G — GIRDERS 1 & 6

TWENTIETH POINTS		℄ BRG.	0.050	0.100	0.150	0.200	0.250	0.300	0.350	0.400	0.450	0.500	0.550	0.600	0.650	0.700	0.750	0.800	0.850	0.900	0.950	℄ BRG.
CAMBER (GIRDER ALONE IN PLACE)	↑	0.000	0.024	0.048	0.063	0.079	0.090	0.101	0.108	0.114	0.116	0.118	0.116	0.114	0.108	0.101	0.090	0.079	0.063	0.048	0.024	0.000
✱ DEFLECTION DUE TO SUPERIMPOSED D.L.	↓	0.000	0.010	0.021	0.030	0.040	0.048	0.056	0.061	0.066	0.067	0.069	0.067	0.066	0.061	0.056	0.048	0.040	0.030	0.021	0.010	0.000
FINAL CAMBER	↑	0	3/16"	5/16"	3/8"	7/16"	1/2"	9/16"	9/16"	9/16"	9/16"	9/16"	9/16"	9/16"	9/16"	9/16"	1/2"	7/16"	3/8"	5/16"	3/16"	0

DEAD LOAD DEFLECTION TABLE FOR GIRDER

0.6"Ø LOW RELAXATION STRANDS — SPAN G — GIRDERS 2 THRU 5

TWENTIETH POINTS		℄ BRG.	0.050	0.100	0.150	0.200	0.250	0.300	0.350	0.400	0.450	0.500	0.550	0.600	0.650	0.700	0.750	0.800	0.850	0.900	0.950	℄ BRG.
CAMBER (GIRDER ALONE IN PLACE)	↑	0.000	0.024	0.048	0.063	0.079	0.090	0.101	0.108	0.114	0.116	0.118	0.116	0.114	0.108	0.101	0.090	0.079	0.063	0.048	0.024	0.000
✱ DEFLECTION DUE TO SUPERIMPOSED D.L.	↓	0.000	0.009	0.018	0.027	0.036	0.043	0.050	0.055	0.059	0.061	0.062	0.061	0.059	0.055	0.050	0.043	0.036	0.027	0.018	0.009	0.000
FINAL CAMBER	↑	0	3/16"	3/8"	7/16"	1/2"	9/16"	5/8"	11/16"	11/16"	11/16"	11/16"	11/16"	11/16"	11/16"	5/8"	9/16"	1/2"	7/16"	3/8"	3/16"	0

✱ INCLUDES FUTURE WEARING SURFACE.
ALL VALUES ARE SHOWN IN FEET (DECIMAL FORM), EXCEPT "FINAL CAMBER", WHICH IS GIVEN IN INCHES (FRACTION FORM).

PROJECT NO. B-5831
SURRY/YADKIN COUNTY
STATION: 32+28.00 -L-

SHEET 4 OF 4

NORTH CAROLINA PROFESSIONAL SEAL 20125 ENGINEER MARSHALL G. CHECK, JR.
Marshall G. Check, Jr.
5FBCC2F3A4DC413...
9/23/2025

DOCUMENT NOT CONSIDERED FINAL UNLESS ALL SIGNATURES COMPLETED

TGS ENGINEERS
706 HILLSBOROUGH STREET
SUITE 200
RALEIGH, NC 27603
PH (919) 773-8887
CORP. LICENSE NO.: C-0275

STATE OF NORTH CAROLINA
DEPARTMENT OF TRANSPORTATION
RALEIGH

SUPERSTRUCTURE

DEAD LOAD DEFLECTIONS

REVISIONS						
NO.	BY:	DATE:	NO.	BY:	DATE:	
1			3			
2			4			

SHEET NO. S-30
TOTAL SHEETS 61

DRAWN BY : ZCS DATE : 1/25
CHECKED BY : MGC DATE : 1/25
DESIGN ENGINEER OF RECORD: STM DATE : 1/25

2/28/2025
c:\workdir\ncdot-pw.bentley.com_ncdot-pw-01\sam massinople\d0166590\401_061_B-5831_SMU_GDR13_850006.dgn
smassinople

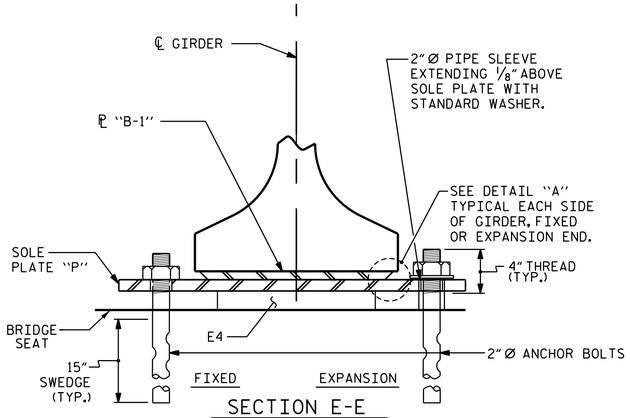

SECTION E-E

NOTE: FOR 2"Ø ANCHOR BOLT LENGTHS, SEE SUBSTRUCTURE SHEETS.

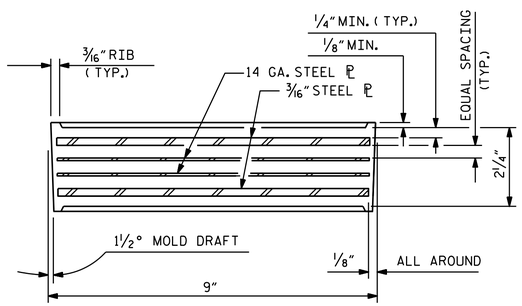

TYPICAL SECTION OF ELASTOMERIC BEARINGS

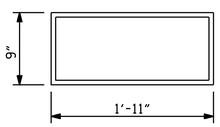

E1 (84 REQ'D)

PLAN VIEW OF ELASTOMERIC BEARING

TYPE V

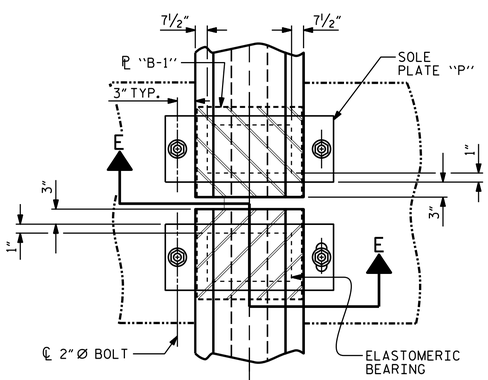

TYPICAL HALF-PLAN (SHOWING FIXED BEARING)

TYPICAL HALF-PLAN (SHOWING EXPANSION BEARING)

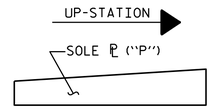

SOLE ℄ PLACEMENT DETAIL

MAXIMUM ALLOWABLE SERVICE LOADS	
D.L.+L.L. (NO IMPACT)	
TYPE V	365 k

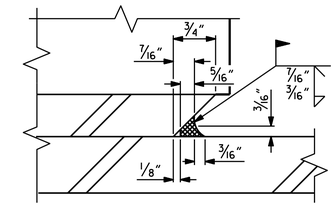

DETAIL "A"

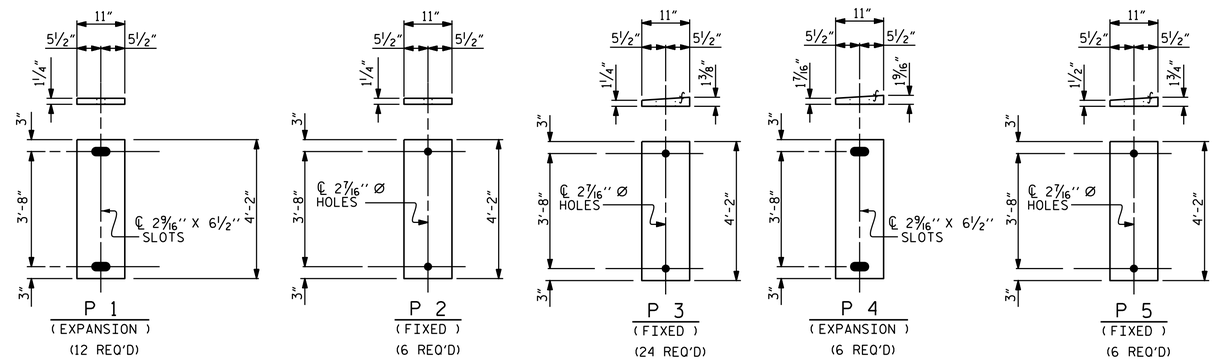

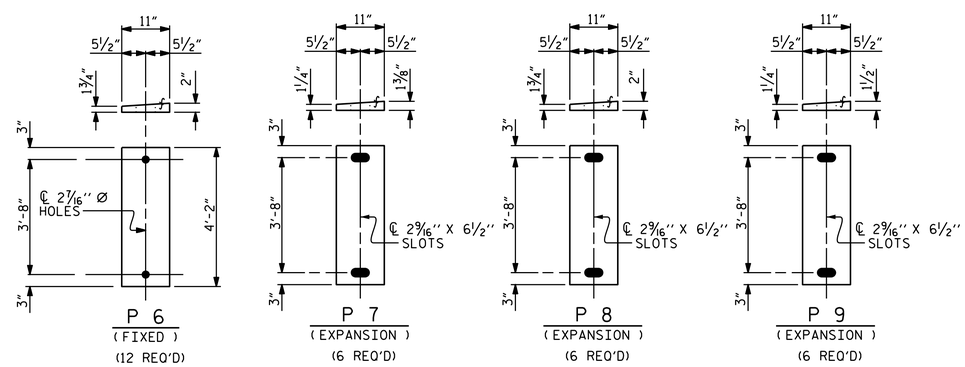

SOLE PLATE DETAILS ("P")

FOR SOLE PLATE LOCATIONS, SEE "FRAMING PLAN" SHEET.

NOTES

AT ALL FIXED POINTS OF SUPPORT, NUTS FOR ANCHOR BOLTS ARE TO BE TIGHTENED FINGER TIGHT AND THEN BACKED OFF 1/2 TURN. THE THREAD OF THE NUT AND BOLT SHALL THEN BE BURRED WITH A SHARP POINTED TOOL.

THE 2"Ø PIPE SLEEVE SHALL BE CUT FROM SCHEDULE 40 PVC PLASTIC PIPE. THE PVC PLASTIC PIPE SHALL MEET THE REQUIREMENTS OF ASTM D1785.

STEEL SOLE PLATES, ANCHOR BOLTS, NUTS, AND WASHERS SHALL BE GALVANIZED IN ACCORDANCE WITH THE STANDARD SPECIFICATIONS.

PRIOR TO WELDING, GRIND THE GALVANIZED SURFACE OF THE PORTION OF THE EMBEDDED PLATE AND SOLE PLATE THAT ARE TO BE WELDED. AFTER WELDING, DAMAGED GALVANIZED SURFACES SHALL BE REPAIRED IN ACCORDANCE WITH THE STANDARD SPECIFICATIONS.

WHEN WELDING THE SOLE PLATE TO THE EMBEDDED PLATE IN THE GIRDER, USE TEMPERATURE INDICATING WAX PENS, OR OTHER SUITABLE MEANS, TO ENSURE THAT THE TEMPERATURE OF THE SOLE PLATE DOES NOT EXCEED 300°F. TEMPERATURES ABOVE THIS MAY DAMAGE THE ELASTOMER.

SOLE PLATE "P", BOLTS, NUTS, WASHERS, AND PIPE SLEEVE SHALL BE INCLUDED IN THE PAY ITEM FOR PRESTRESSED CONCRETE GIRDERS.

ANCHOR BOLTS SHALL MEET THE REQUIREMENTS OF ASTM A449. NUTS SHALL MEET THE REQUIREMENTS OF AASHTO M291-DH OR AASHTO M292-2H. WASHERS SHALL MEET THE REQUIREMENTS OF AASHTO M293. NO SHOP DRAWINGS ARE REQUIRED FOR ANCHOR BOLTS, NUTS AND WASHERS. SHOP INSPECTION IS REQUIRED.

ALL SURFACES OF BEARING PLATES SHALL BE SMOOTH AND STRAIGHT.

THE ELASTOMER IN THE STEEL REINFORCED BEARINGS SHALL HAVE A SHEAR MODULUS OF 0.160 KSI, IN ACCORDANCE WITH AASHTO M251.

FOR STEEL REINFORCED ELASTOMERIC BEARINGS, SEE STANDARD SPECIFICATIONS.

ALL SOLE PLATES SHALL BE AASHTO M270 GRADE 36.

FOR STEEL REINFORCED ELASTOMERIC BEARINGS, SEE STANDARD SPECIFICATIONS.

PROJECT NO. B-5831
SURRY/YADKIN COUNTY
STATION: 32+28.00 -Y1-

NORTH CAROLINA PROFESSIONAL SEAL 20125 ENGINEER MARVIN LUG. CHEEKS, JR.
5FBCC2F3A4DC413...
9/23/2025

DOCUMENT NOT CONSIDERED FINAL UNLESS ALL SIGNATURES COMPLETED

TGS ENGINEERS
706 HILLSBOROUGH STREET
SUITE 200
RALEIGH, NC 27603
PH (919) 773-8887
CORP. LICENSE NO.: C-0275

STATE OF NORTH CAROLINA
DEPARTMENT OF TRANSPORTATION
RALEIGH

SUPERSTRUCTURE

ELASTOMERIC BEARING DETAILS

PRESTRESSED CONCRETE GIRDER

REVISIONS						
NO.	BY:	DATE:	NO.	BY:	DATE:	
1			3			
2			4			

SHEET NO. S-31
TOTAL SHEETS 61

STD. NO. EB4 (SHT 1)

ASSEMBLED BY : S.B. WILLIAMS		DATE : 6-24	
CHECKED BY : MGC		DATE : 7-24	
DRAWN BY : WJH 8/89	REV. 12/17	MAA/THC	
CHECKED BY : CRK 8/89	REV. 10/21	BNB/AAI	
	REV. 10/23	BNB/SNM	

$$$$$$SYSTIME$$$$$
$$$$$$$$$$$$$$$$$$$$$$DGN$$$$$$$$$$$$$$$$$$$$$$$$
$$$$USERNAME$$$$

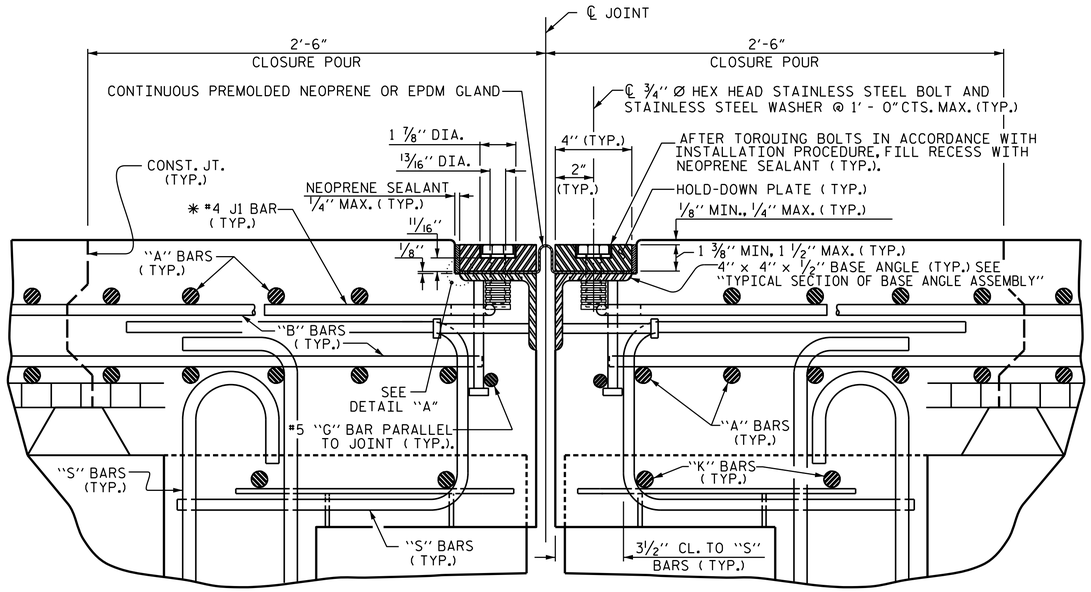

EXPANSION JOINT DETAILS

SECTION NORMAL TO JOINT -- BENTS 2 & 5

✱ THE QUANTITY OF #4 J1 BARS ON THE BILL OF MATERIAL IS BASED ON 1'-0" CENTERS. J1 BARS SHALL BE PLACED AT EACH VERTICAL STUD ANCHOR BOLT. IN THE EVENT THAT THE NUMBER OF VERTICAL STUD ANCHORS EXCEEDS THE NUMBER OF J1 BARS SPECIFIED, ADDITIONAL J1 BARS WILL NOT BE REQUIRED.

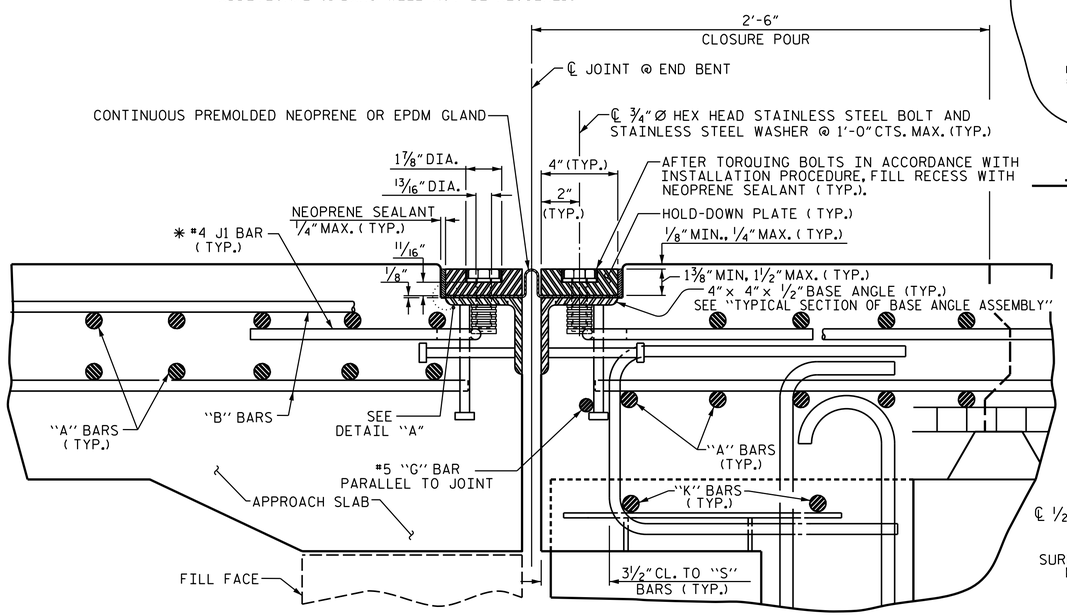

EXPANSION JOINT DETAILS

SECTION NORMAL TO JOINT -- END BENT 1 & 2

✱ THE QUANTITY OF #4 J1 BARS ON THE BILL OF MATERIAL IS BASED ON 1'-0" CENTERS. J1 BARS SHALL BE PLACED AT EACH VERTICAL STUD ANCHOR BOLT. IN THE EVENT THAT THE NUMBER OF VERTICAL STUD ANCHORS EXCEEDS THE NUMBER OF J1 BARS SPECIFIED, ADDITIONAL J1 BARS WILL NOT BE REQUIRED.

INSTALLATION PROCEDURE

1. A TEMPLATE OR OTHER SUITABLE DEVICE SHALL BE USED TO FORM THE TOP OF THE EXPANSION JOINT SEAL BLOCKOUT TO THE PROPER DEPTH AND WIDTH. THE TEMPLATE SHALL BE 4⅛" TO 4¼" WIDE AND OF SUCH THICKNESS AS TO PROVIDE FOR CORRECT FINAL ELEVATION OF TOP OF HOLD-DOWN PLATES. THE TEMPLATE SHALL BE ATTACHED TO THE BASE ANGLE ASSEMBLY WITH THE ¾" Ø HEX HEAD BOLTS PROVIDED FOR THE HOLD-DOWN PLATES. A 1" Ø HOLE SHALL BE PROVIDED IN THE TEMPLATE CENTERED OVER EACH WEEP HOLE IN THE 4" X 4" X ½" BASE ANGLE. OTHER METHODS OF INSURING DRAINAGE THROUGH WEEP HOLES MAY BE EMPLOYED SUBJECT TO ENGINEER'S APPROVAL.
2. AFTER THE CONCRETE HAS BEEN CAST ON BOTH SIDES OF THE JOINT, REMOVE THE TEMPLATE. THOROUGHLY CLEAN THE BOLT HOLES AND THE ANGLE PLATE. REMOVE ANY EXCESS CONCRETE THAT COMES OUT OF THE WEEP HOLES. ANY DAMAGED STEEL SHALL BE REPAIRED IN ACCORDANCE WITH THE SPECIAL PROVISION FOR THERMAL SPRAYED COATINGS (METALLIZATION).
3. LAY THE GLAND ON THE BASE ANGLE AND FIELD MARK THE GLAND FOR THE BOLT HOLES. HOLES IN THE GLAND SHALL BE PUNCHED ⅞" IN DIAMETER WITH A HAND PUNCH.
4. IN ORDER TO CHECK FOR PROPER ALIGNMENT, PLACE THE GLAND AND HOLD-DOWN PLATES ON THE BASE ANGLE. DO NOT APPLY NEOPRENE SEALANT. BOLT THE HOLD-DOWN PLATES TO THE BASE ANGLE BUT DO NOT TIGHTEN. THE ENGINEER SHALL INSPECT THE JOINT SEAL DEVICE FOR PROPER ALIGNMENT.
5. AFTER INSPECTION, REMOVE THE HOLD-DOWN PLATES AND GLAND. APPLY NEOPRENE SEALANT TO THE BASE ANGLE IN ACCORDANCE WITH THE "INSTALLATION SKETCH". PLACE GLAND AND HOLD-DOWN PLATES ON THE BASE ANGLE. BOLT THE HOLD-DOWN PLATES TO THE BASE ANGLE ASSEMBLY AND TORQUE THE BOLTS TO 88 FT-LBS WITH A TORQUE WRENCH. CHECK THE TORQUE AFTER THREE (3) HOURS AND, IF NECESSARY, RETIGHTEN TO 88 FT-LBS. A FINAL CHECK SHALL BE MADE AT SEVEN (7) DAYS. TORQUE SHALL NOT BE LESS THAN 80 FT-LBS AFTER SEVEN (7) DAYS.
6. AFTER PROPER TORQUING, CLEAN THE BOLT HOLE RECESSES, THE RECESS BETWEEN THE JOINT SEAL DEVICE AND CONCRETE, AND THE LIFTING HOLES IN THE HOLD-DOWN PLATE, AND COMPLETELY FILL THE RECESSES AND LIFTING HOLES WITH NEOPRENE SEALANT.

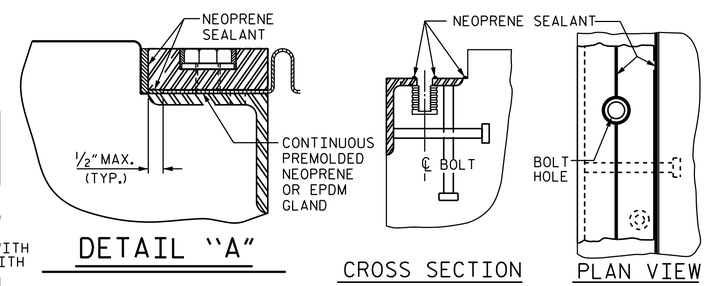

DETAIL "A"

INSTALLATION SKETCH

GENERAL NOTES

1. FOR EXPANSION JOINT SEALS, SEE SPECIAL PROVISIONS.
2. ALL PLATES AND ANGLES SHALL CONFORM TO AASHTO M270 GRADE 36 STEEL OR APPROVED EQUAL. ALL HOLD-DOWN BOLTS SHALL CONFORM TO ASTM F593 ALLOY 304 STAINLESS STEEL AND WASHERS SHALL CONFORM TO ASTM F844 EXCEPT THEY SHALL BE MADE FROM ALLOY 304 STAINLESS STEEL. ALL STUD ANCHORS SHALL CONFORM TO AASHTO M169, GRADES 1010 THRU 1020 OR APPROVED EQUAL. ALL CONCRETE INSERTS SHALL BE CLOSED END AND SHALL CONFORM TO AASHTO M169, GRADE 12L14. TENSILE CAPACITY SHALL BE 3000 LBS. MINIMUM.
3. A PREMOLDED CORRUGATED OR NON-CORRUGATED GLAND SHALL BE USED FOR JOINTS SKEWED BETWEEN 50° THRU 130°. FOR JOINTS SKEWED LESS THAN 50° OR MORE THAN 130°, ONLY A CORRUGATED GLAND SHALL BE USED.
4. CLOSED END FERRULES AND STUD ANCHORS SHALL BE SHOP WELDED AND ALL HOLES SHALL BE SHOP DRILLED AS SHOWN ON PLANS. STUD ANCHORS SHALL BE ELECTRIC ARC END WELDED WITH COMPLETE FUSION.
5. SURFACES COMING IN CONTACT WITH NEOPRENE SHALL BE GROUND SMOOTH PRIOR TO METALLIZING.
6. UPON COMPLETION OF SHOP FABRICATION, THE HOLD-DOWN PLATE AND BASE ANGLE ASSEMBLY, AS SHOWN IN THE "TYPICAL SECTION OF BASE ANGLE ASSEMBLY", SHALL BE METALLIZED IN ACCORDANCE WITH THE STANDARD SPECIFICATIONS. FOR THERMAL SPRAYED COATINGS (METALLIZATION), SEE SPECIAL PROVISIONS.
7. THE COVER PLATES SHALL BE GALVANIZED OR METALLIZED IN ACCORDANCE WITH THE STANDARD SPECIFICATIONS. FOR THERMAL SPRAYED COATINGS (METALLIZATION), SEE SPECIAL PROVISIONS.
8. BASE ANGLE ASSEMBLY SHALL BE CONTINUOUS FOR THE LENGTH OF THE JOINT. AT CROWN BREAKS, THE ENDS OF THE BASE ANGLE ASSEMBLY SHALL BE CUT PARALLEL TO THE BRIDGE CENTERLINE FOR SKEWS LESS THAN 80° AND GREATER THAN 100°. FINISHED WELD SHALL BE REPAIRED IN ACCORDANCE WITH THE SPECIAL PROVISION FOR THERMAL SPRAYED COATINGS (METALLIZATION).
9. FIELD SPLICES OF HOLD-DOWN PLATES SHALL BE KEPT TO A MINIMUM. CONTRACTOR SHALL FURNISH DETAILED PLANS SHOWING PROPOSED SPLICE LOCATIONS FOR APPROVAL. HOLD-DOWN PLATES SHALL NOT EXCEED 20' LENGTHS UNLESS APPROVED BY THE ENGINEER.
10. NO ALTERNATE JOINT DETAILS SHALL BE PERMITTED IN LIEU OF THOSE SHOWN ON THESE PLANS.
11. THE CONTRACTOR MAY, AT HIS OPTION, USE ADHESIVELY ANCHORED ANCHOR BOLTS IN PLACE OF CONCRETE INSERTS FOR COVER PLATES. THE YIELD LOAD OF THE ¾" Ø BOLT IS 10 KIPS. FIELD TESTING OF THE ADHESIVE BONDING SYSTEM IS NOT REQUIRED.
12. THE FABRICATOR SHALL PROVIDE ½" Ø THREADED HOLES IN THE HOLD-DOWN PLATES TO ASSIST IN LIFTING AND PLACING. THE HOLES SHALL BE ¾" DEEP AT 6'-0" MAXIMUM SPACING AND A MINIMUM OF TWO HOLES PER PLATE.

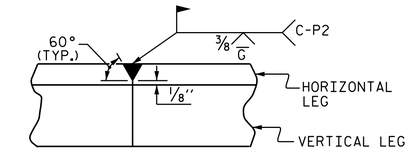

DETAIL- FIELD WELD SPLICE OF BASE ANGLE

MOVEMENT AND SETTING AT JOINT					
BENT NO.	SKEW ANGLE	TOTAL MOVEMENT (ALONG ℄ RDWY)	PERPENDICULAR JOINT OPENING AT 45° F	PERPENDICULAR JOINT OPENING AT 60° F	PERPENDICULAR JOINT OPENING AT 90° F
END BENT 1	90°-00'-00"	9⁄16"	1⁷⁄₁₆"	1⁵⁄₁₆"	1⅛"
BENT 2	90°-00'-00"	1⅛"	2⅜"	2"	1⅜"
BENT 5	90°-00'-00"	1¹⁵⁄₁₆"	2⅜"	2¹⁄₁₆"	1⅜"
END BENT 2	90°-00'-00"	9⁄16"	1⁷⁄₁₆"	1⁵⁄₁₆"	1⅛"

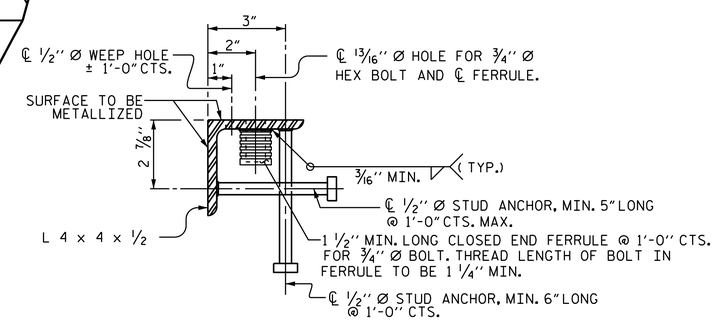

TYPICAL SECTION OF BASE ANGLE ASSEMBLY

PROJECT NO. B-5831
SURRY/YADKIN COUNTY
STATION: 32+28.00 -L-

SHEET 1 OF 2

NORTH CAROLINA PROFESSIONAL SEAL 20125 ENGINEER MARSHALL G. CHECK, JR.
Marshall G. Check, Jr.
5FBCC2F3A4DC413...
9/23/2025

DOCUMENT NOT CONSIDERED FINAL UNLESS ALL SIGNATURES COMPLETED

TGS ENGINEERS
706 HILLSBOROUGH STREET
SUITE 200
RALEIGH, NC 27603
PH (919) 773-8887
CORP. LICENSE NO.: C-0275

STATE OF NORTH CAROLINA
DEPARTMENT OF TRANSPORTATION
RALEIGH

STANDARD

EXPANSION JOINT SEAL DETAILS

REVISIONS						
NO.	BY:	DATE:	NO.	BY:	DATE:	
1			3			
2			4			

SHEET NO. S-32
TOTAL SHEETS 61

ASSEMBLED BY : S. B. WILLIAMS		DATE : 5-24	
CHECKED BY : MGC		DATE : 5-24	
DRAWN BY : REK 9/87	REV. 10/1/11	MAA/GM	
CHECKED BY : CRK 10/87	REV. 10/17	MAA/THC	
	REV. 6/18	MAA/THC	

$$$$$$SYSTIME$$$$$
$$$$$$$$$$$$$$$$$$$$$$DGN$$$$$$$$$$$$$$$$$$$$$$$$
$$$$USERNAME$$$$

STD. NO. EJS1 (SHT 1)

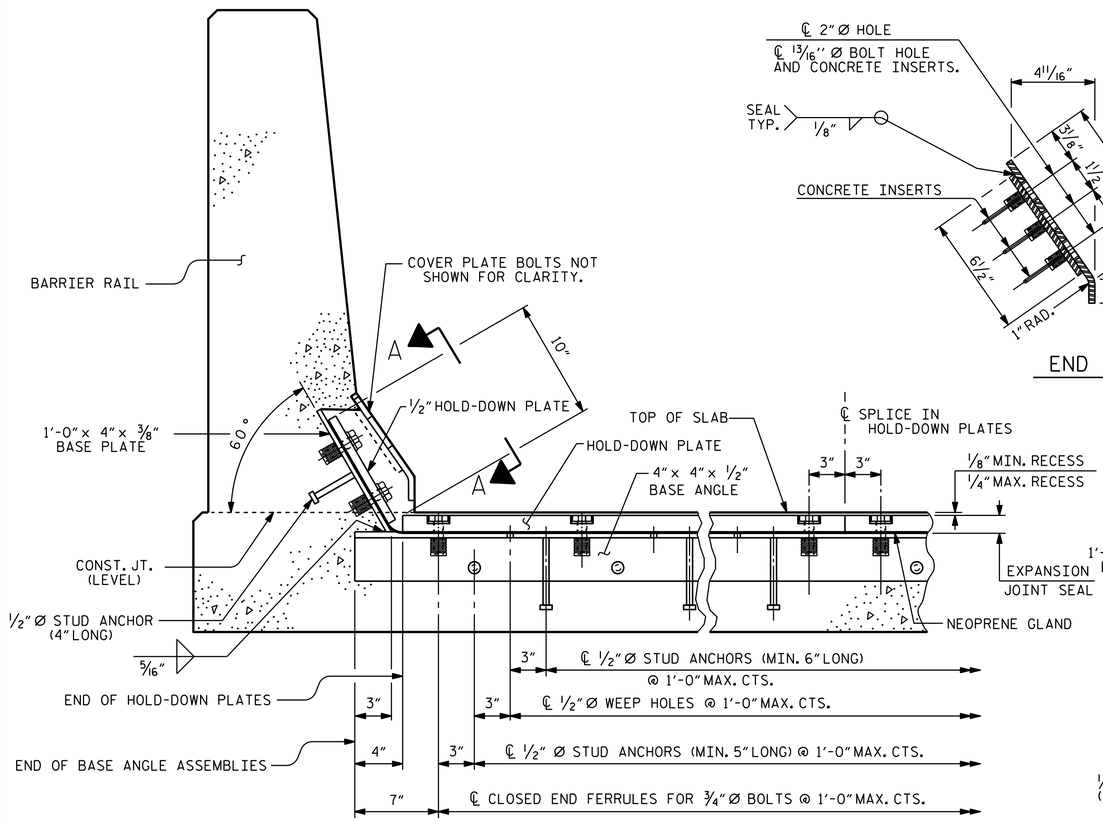

SECTION THRU RAIL NORMAL TO JOINT

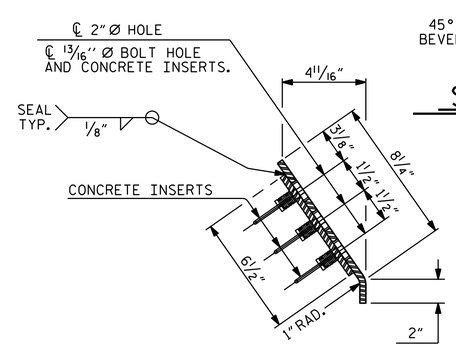

END VIEW

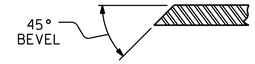

SECTION B - B

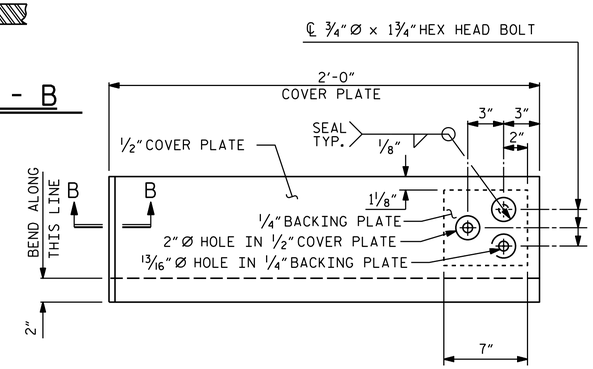

TYPE II - ELEVATION VIEW

COVER PLATE DETAILS

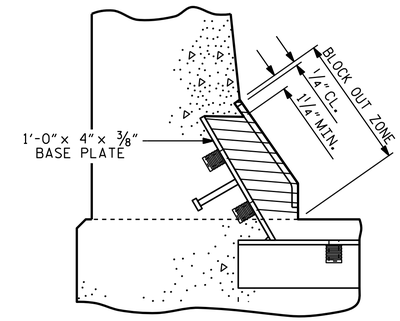

BLOCK OUT DETAIL

SEE "SECTION A - A" FOR OTHER DETAILS.

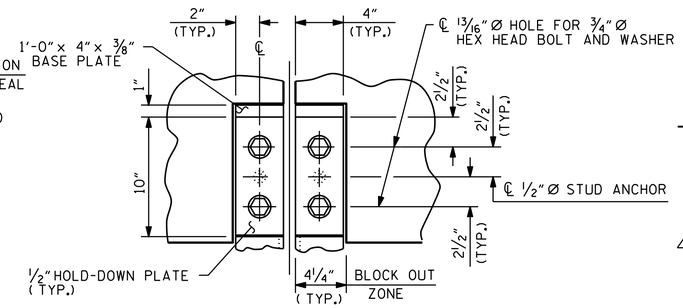

SECTION A-A

END BENT

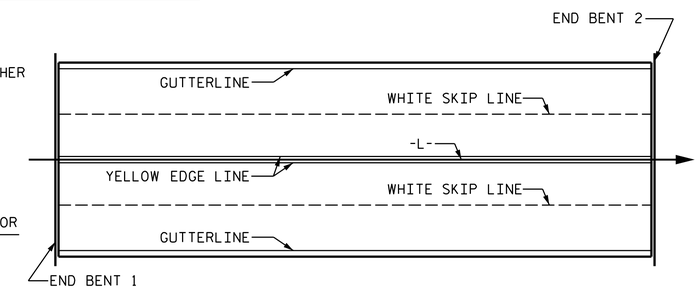

PAVEMENT MARKING ALIGNMENT

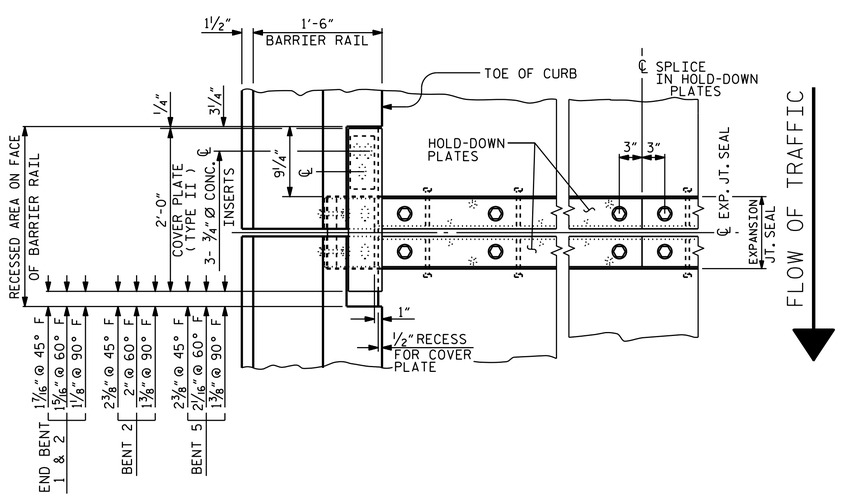

PLAN OF EXPANSION JOINT SEAL

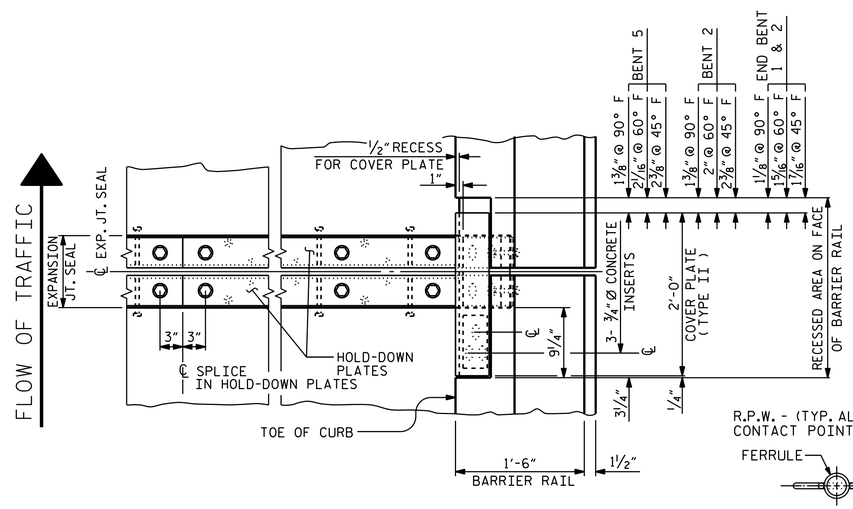

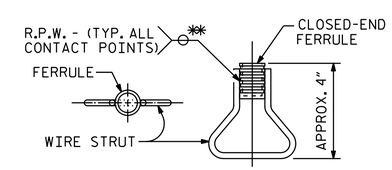

PLAN ELEVATION

CONCRETE INSERT

** EACH WELDED ATTACHMENT OF WIRE TO FERRULE SHALL DEVELOP THE TENSILE STRENGTH OF THE WIRE.

NORTH CAROLINA PROFESSIONAL SEAL 20125 ENGINEER MARSHALL G. CHECK, JR.
Marshall G. Check, Jr.
SFBCC2F3A4DC413...
9/23/2025

DOCUMENT NOT CONSIDERED FINAL UNLESS ALL SIGNATURES COMPLETED

TGS ENGINEERS
706 HILLSBOROUGH STREET
SUITE 200
RALEIGH, NC 27603
PH (919) 773-8887
CORP. LICENSE NO.: C-0275

PROJECT NO. B-5831

SURRY/YADKIN COUNTY

STATION: 32+28.00 -L-

SHEET 2 OF 2

STATE OF NORTH CAROLINA
DEPARTMENT OF TRANSPORTATION
RALEIGH

STANDARD

EXPANSION JOINT SEAL DETAILS FOR BARRIER RAIL

ASSEMBLED BY : S. B. WILLIAMS	DATE : 5-24		
CHECKED BY : MGC	DATE : 5-24		
DRAWN BY : REK 9/87	REV. 7/12	MAA/GM	
CHECKED BY : CRK 10/87	REV. 6/13	MAA/GM	
	REV. 12/17	MAA/THC	

REVISIONS							
NO.	BY:	DATE:	NO.	BY:	DATE:	SHEET NO.	S-33
1			3			TOTAL SHEETS	61
2			4				

$$$$$$$SYSTIME$$$$$
$$$$$$$$$$$$$$$$$$$$$$DGN$$$$$$$$$$$$$$$$$$$$$$$$
$$$$USERNAME$$$$

STD. NO. EJS2 SHT 1

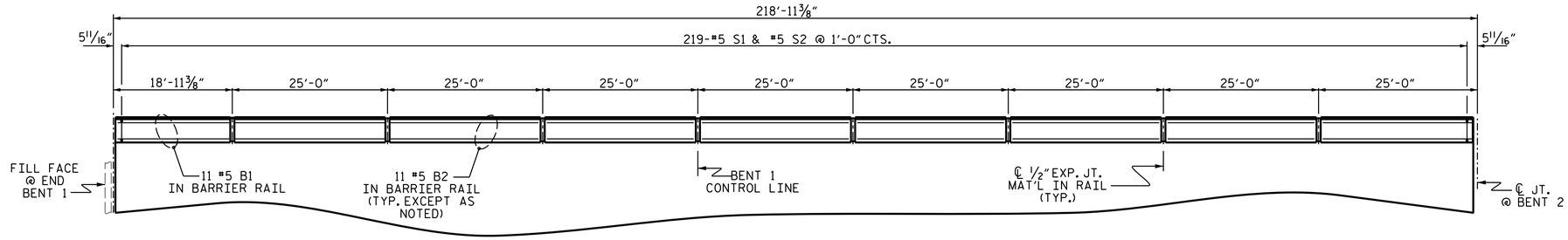

PLAN OF BARRIER RAIL (SPANS A-B)

(LEFT SIDE SHOWN, RIGHT SIDE SIMILAR)

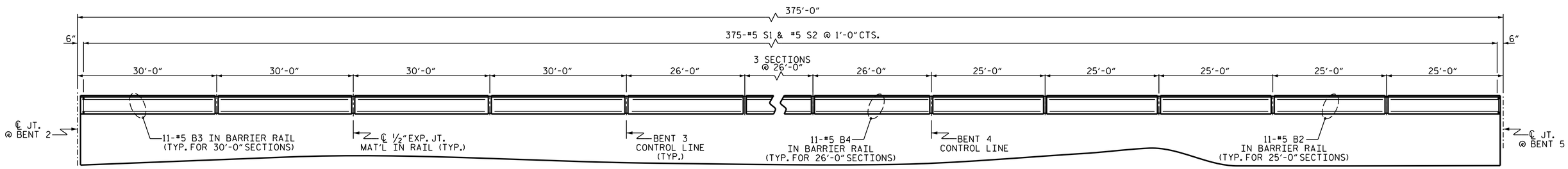

PLAN OF BARRIER RAIL (SPANS C-D-E)

(LEFT SIDE SHOWN, RIGHT SIDE SIMILAR)

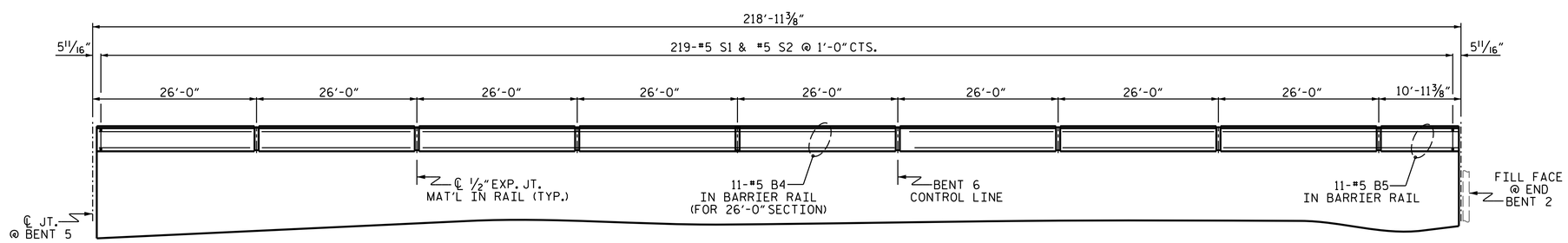

PLAN OF BARRIER RAIL (SPANS F-G)

(LEFT SIDE SHOWN, RIGHT SIDE SIMILAR)

PROJECT NO. B-5831

SURRY/YADKIN COUNTY

STATION: 32+28.00 -L-

SHEET 1 OF 2

NORTH CAROLINA PROFESSIONAL SEAL 20125 ENGINEER MARSHALL G. CREEK, JR.

Marshall G. Creek, Jr.

SFBCC2F3A4DC413...

9/23/2025

DOCUMENT NOT CONSIDERED FINAL UNLESS ALL SIGNATURES COMPLETED

TGS ENGINEERS
706 HILLSBOROUGH STREET
SUITE 200
RALEIGH, NC 27603
PH (919) 773-8887
CORP. LICENSE NO.: C-0275

STATE OF NORTH CAROLINA
DEPARTMENT OF TRANSPORTATION
RALEIGH

SUPERSTRUCTURE

CONCRETE BARRIER RAIL

REVISIONS						
NO.	BY:	DATE:	NO.	BY:	DATE:	
1			3			
2			4			

SHEET NO. S-34

TOTAL SHEETS 61

DRAWN BY :	S. B. WILLIAMS	DATE :	5/24
CHECKED BY :	MGC	DATE :	6/24
DESIGN ENGINEER OF RECORD:	MGC	DATE :	12/24

12/19/2024
c:\workdir\ncdot-pw.bentley.com_ncdot-pw-01\zachary smith\d0166590\401_069_B-5831_SMU_BR1_850006.dgn
ZSmith

NOTES

THE BARRIER RAIL IN EACH CONTINUOUS UNIT SHALL NOT BE CAST UNTIL ALL SLAB CONCRETE IN THAT UNIT HAS BEEN CAST AND HAS REACHED A MINIMUM COMPRESSIVE STRENGTH OF 3,000 PSI.

ALL REINFORCING STEEL IN BARRIER RAILS SHALL BE EPOXY COATED.

GROOVED CONTRACTION JOINTS, ½" IN DEPTH, SHALL BE TOOLED IN ALL EXPOSED FACES OF THE BARRIER RAIL AND IN ACCORDANCE WITH ARTICLE 825-10(B) OF THE STANDARD SPECIFICATIONS. THE CONTRACTION JOINT SHALL BE LOCATED AT EACH THIRD POINT BETWEEN BARRIER RAIL EXPANSION JOINTS. ONLY ONE CONTRACTION JOINT IS REQUIRED AT MIDPOINT OF BARRIER RAIL SEGMENTS LESS THAN 20 FEET IN LENGTH AND NO CONTRACTION JOINTS ARE REQUIRED FOR THOSE SEGMENTS LESS THAN 10 FEET IN LENGTH.

PAYMENT FOR THE BARRIER RAIL EXTENSIONS ON THE APPROACH SLABS SHALL BE PAID FOR UNDER PRICE BID FOR LINEAR FEET OF CONCRETE BARRIER RAIL. REINFORCING STEEL AND CONCRETE QUANTITIES ARE INCLUDED WITH THE APPROACH SLAB BILL OF MATERIAL.

BAR TYPES

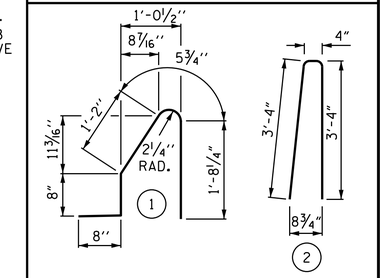

ALL BAR DIMENSIONS ARE OUT TO OUT

BILL OF MATERIAL

FOR CONCRETE BARRIER RAIL ONLY

BAR	NO.	SIZE	TYPE	LENGTH	WEIGHT
* B1	22	#5	STR.	18'-6"	425
* B2	286	#5	STR.	24'-7"	7,333
* B3	88	#5	STR.	29'-7"	2,715
* B4	286	#5	STR.	25'-7"	7,631
* B5	22	#5	STR.	10'-6"	241
* S1	1,626	#5	1	4'-8"	7,914
* S2	1,626	#5	2	7'-0"	11,871

* EPOXY COATED REINFORCING STEEL	38,130 LBS.
CLASS AA CONCRETE	221.2 CU. YDS.
TOTAL CONCRETE BARRIER RAIL	1,665.78 LIN. FT.

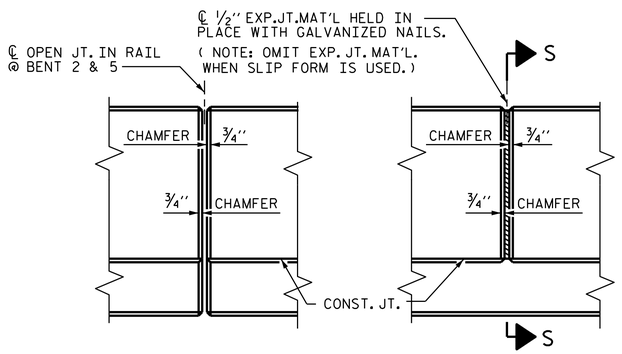

ELEVATION AT EXPANSION JOINTS

BARRIER RAIL DETAILS

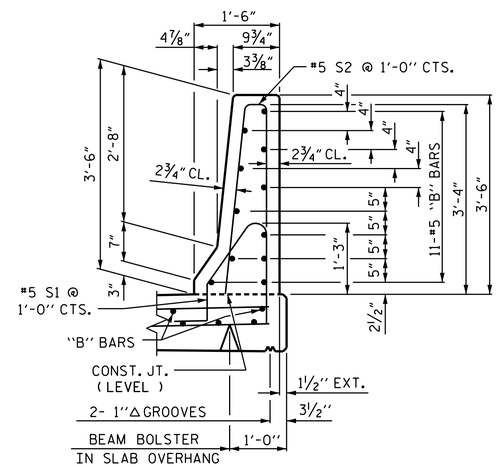

SECTION THRU RAIL

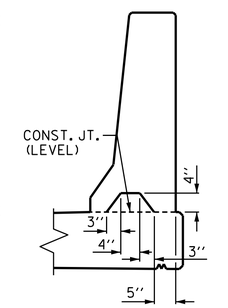

SECTION S-S

AT DAM IN OPEN JOINT (THIS IS TO BE USED ONLY WHEN SLIP FORM IS USED)

PROJECT NO. B-5831

SURRY/YADKIN COUNTY

STATION: 32+28.00 -L-

SHEET 2 OF 2

STATE OF NORTH CAROLINA
DEPARTMENT OF TRANSPORTATION
RALEIGH

SUPERSTRUCTURE

CONCRETE BARRIER RAIL

NORTH CAROLINA PROFESSIONAL SEAL 20125 ENGINEER MARSHALL B. CHEEK, JR.

Marshall B. Cheek, Jr.
5FBCC2F3A4DC413...

9/23/2025

DOCUMENT NOT CONSIDERED FINAL UNLESS ALL SIGNATURES COMPLETED

TGS ENGINEERS
706 HILLSBOROUGH STREET
SUITE 200
RALEIGH, NC 27603
PH (919) 773-8887
CORP. LICENSE NO.: C-0275

REVISIONS							
NO.	BY:	DATE:	NO.	BY:	DATE:		
1			3				
2			4				

SHEET NO. S-35

TOTAL SHEETS 61

ASSEMBLED BY : S. B. WILLIAMS	DATE : 5-24	
CHECKED BY : MGC	DATE : 6-24	
DRAWN BY : ARB 5/87	REV. 7/12	MAA/GM
CHECKED BY : SJD 9/87	REV. 6/13	MAA/GM
	REV. 12/17	MAA/THC

12/19/2024
c:\workdir\ncdot-pw.bentley.com_ncdot-pw-01\zachary smith\d0166590\401_071_B-5831_SMU_BR2_850006.dgn
ZSmith

STD. NO. CBR1 (SHT 1)

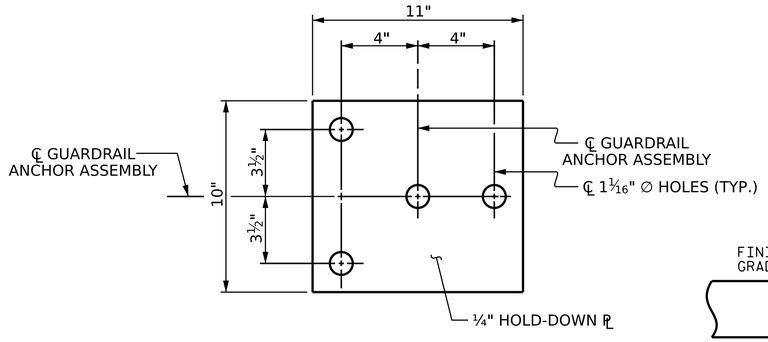

PLAN

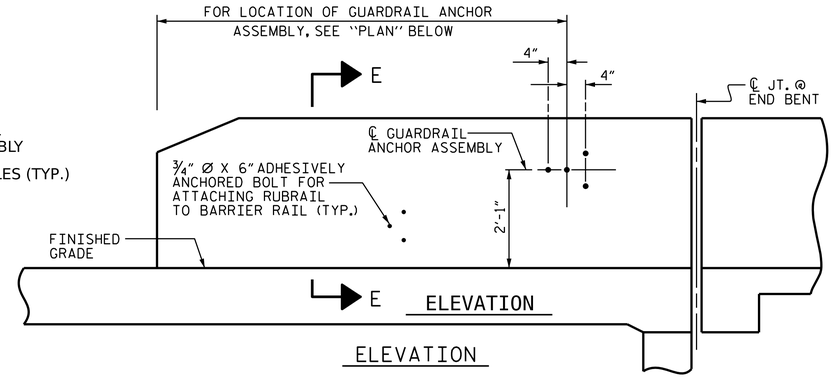

ELEVATION

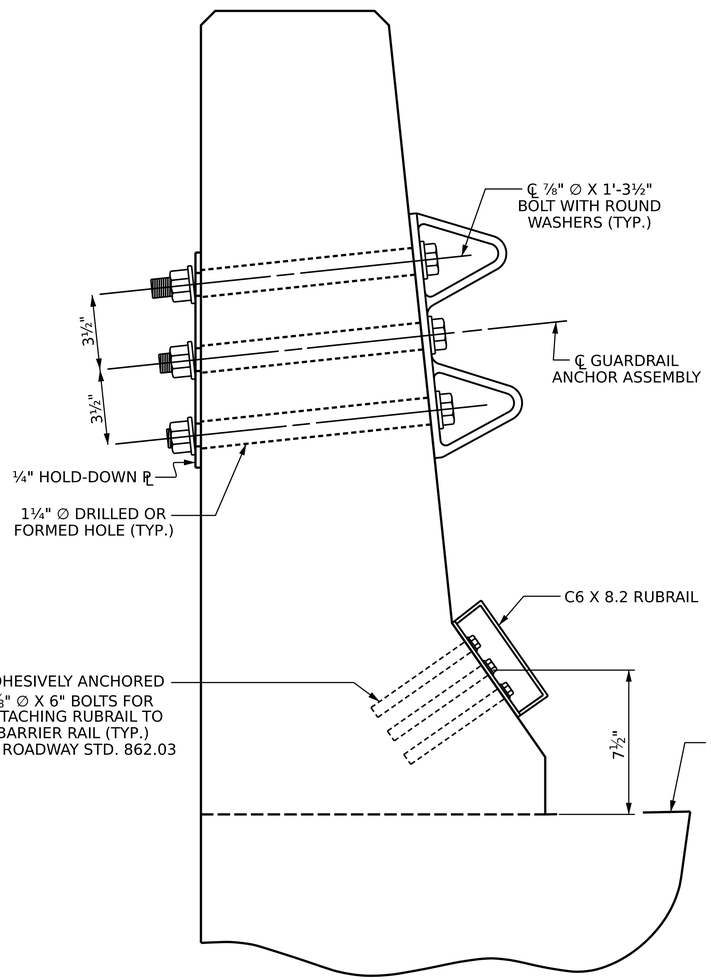

SECTION E-E

GUARDRAIL ANCHOR ASSEMBLY DETAILS

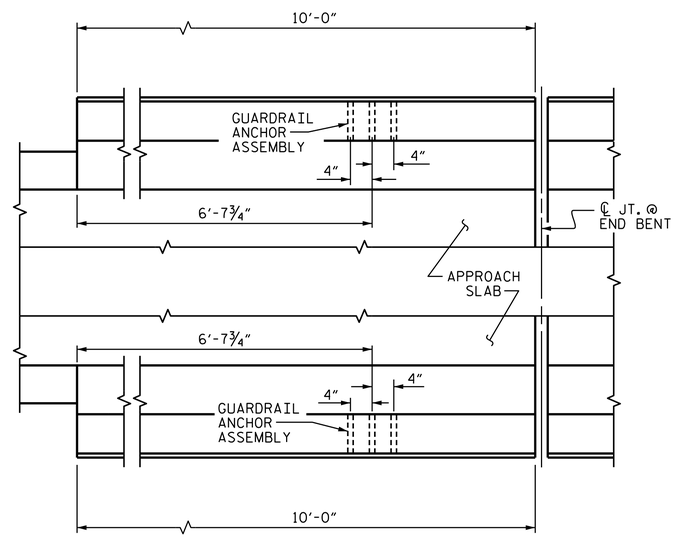

PLAN

LOCATION OF ANCHORS FOR GUARDRAIL

END BENT 1 SHOWN, END BENT 2 SIMILAR.

NOTES

THE GUARDRAIL ANCHOR ASSEMBLY SHALL CONSIST OF A ¼" HOLD-DOWN PLATE AND 4 -⅞"∅ BOLTS WITH NUTS AND WASHERS, RUBRAIL, AND ADHESIVELY ANCHORED BOLTS.

THE HOLD-DOWN PLATE SHALL CONFORM TO AASHTO M270 GRADE 36. AFTER FABRICATION, THE HOLD-DOWN PLATE SHALL BE HOT-DIP GALVANIZED IN ACCORDANCE WITH AASHTO M111.

BOLTS SHALL CONFORM TO THE REQUIREMENTS OF ASTM A307 AND NUTS SHALL CONFORM TO THE REQUIREMENTS OF AASHTO M291. BOLTS, NUTS AND WASHERS SHALL BE GALVANIZED. (AT THE CONTRACTOR'S OPTION, STAINLESS STEEL BOLTS, NUTS AND WASHERS MAY BE USED AS AN ALTERNATE FOR THE ⅞" ∅ GALVANIZED BOLTS, NUTS AND WASHERS. THEY SHALL CONFORM TO OR EXCEED THE MECHANICAL REQUIREMENTS OF ASTM A307. THE USE OF THIS ALTERNATE SHALL BE APPROVED BY THE ENGINEER.)

THE GUARDRAIL ANCHOR ASSEMBLY IS REQUIRED AT ALL POINTS WHERE APPROACH GUARDRAIL IS TO BE ATTACHED TO THE END OF BARRIER RAIL. FOR POINTS OF ATTACHMENT, SEE SKETCH.

AFTER INSTALLATION, THE EXPOSED THREAD OF THE BOLT SHALL BE BURRED WITH A SHARP POINTED TOOL.

THE COST OF THE GUARDRAIL ANCHOR ASSEMBLY SHALL BE INCLUDED IN THE UNIT CONTRACT PRICE BID FOR CONCRETE BARRIER RAIL.

THE 1¼" ∅ HOLES SHALL BE FORMED OR DRILLED WITH A CORE BIT. IMPACT TOOLS WILL NOT BE PERMITTED. ANY CONCRETE DAMAGED BY THIS WORK SHALL BE REPAIRED TO THE SATISFACTION OF THE ENGINEER.

THE C6 X 8.2 RUBRAIL IS TO BE ADHESIVELY ANCHORED TO THE RAIL USING THREE ⅝" ∅ X 6" BOLTS WITH WASHERS. LEVEL ONE FIELD TESTING IS REQUIRED, AND THE YIELD LOAD OF THE ⅝" ∅ BOLT IS 12 KIPS. FOR ADHESIVELY ANCHORED ANCHOR BOLTS OR DOWELS, SEE STANDARD SPECIFICATIONS. SEE ROADWAY STANDARD 862.03 FOR DETAILS AND LOCATION OF THE RUBRAIL.

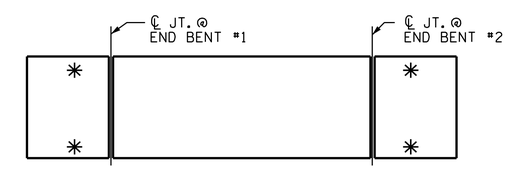

SKETCH SHOWING POINTS OF ATTACHMENTS

✳ DENOTES GUARDRAIL ANCHOR ASSEMBLY

PROJECT NO. B-5831
SURRY/YADKIN COUNTY
STATION: 32+28.00 -L-

ASSEMBLED BY : S. B. WILLIAMS	DATE : 7-24
CHECKED BY : MGC	DATE : 7-24
DRAWN BY : TLA 5/06	REV. 6/13 MAA/GM
CHECKED BY : GM 5/06	REV. 12/17 MAA/THC
	REV. 6/22 BNB/AAI

12/18/2024
c:\workdir\ncdot-pw.bentley.com_ncdot-pw-01\zachary smith\d0166590\401_073_B-5831_SMU_GRA_850006.dgn
ZSmith

NORTH CAROLINA PROFESSIONAL SEAL 20125 ENGINEER
MARSHALL G. CHECK, JR.
Marshall G. Check, Jr.
5FBCC2F3A4DC413...
9/23/2025

DOCUMENT NOT CONSIDERED FINAL UNLESS ALL SIGNATURES COMPLETED

TGS ENGINEERS
706 HILLSBOROUGH STREET
SUITE 200
RALEIGH, NC 27603
PH (919) 773-8887
CORP. LICENSE NO.: C-0275

STATE OF NORTH CAROLINA
DEPARTMENT OF TRANSPORTATION
RALEIGH

SUPERSTRUCTURE

GUARDRAIL ANCHORAGE FOR BARRIER RAIL

REVISIONS						
NO.	BY:	DATE:	NO.	BY:	DATE:	
1			3			
2			4			

SHEET NO. S-36
TOTAL SHEETS 61

STD. NO. GRA2 (SHT 1)

8/26/21

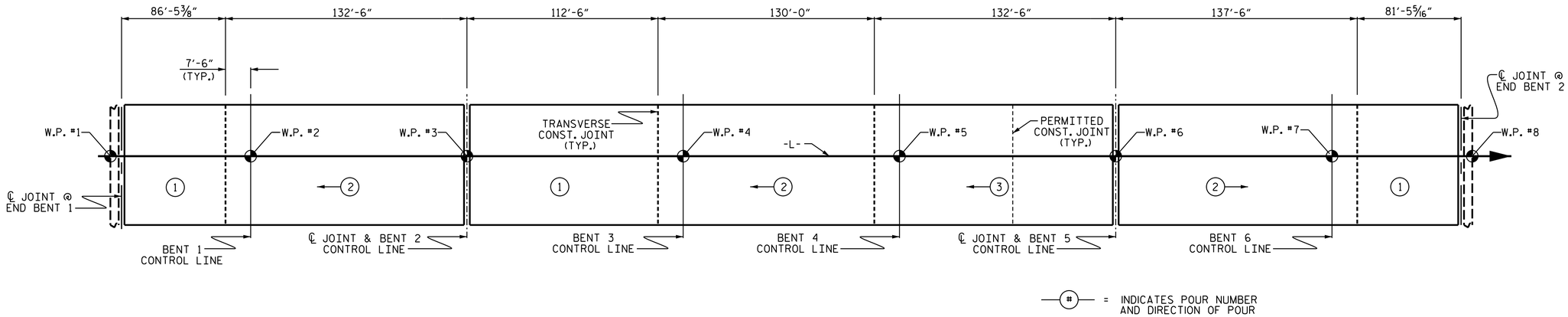

POURING SEQUENCE

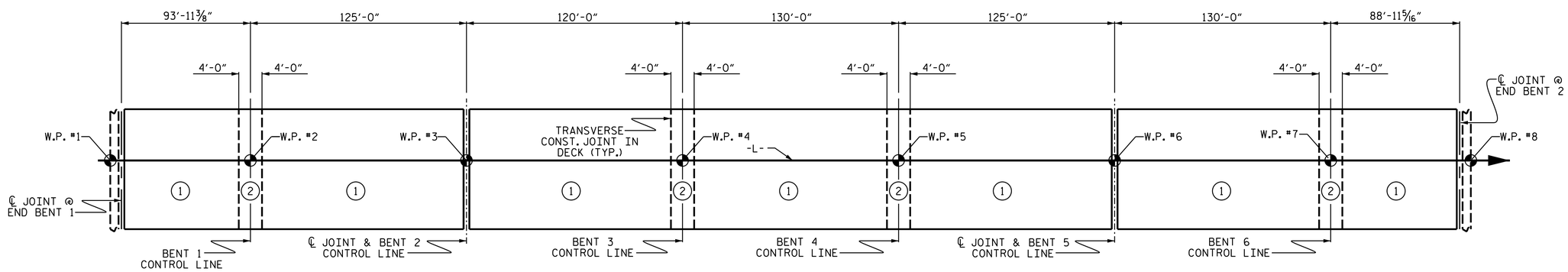

OPTIONAL POURING SEQUENCE

POUR 2 CANNOT BE STARTED UNTIL BOTH ADJACENT POURS 1 REACH A MINIMUM OF 3000 PSI.

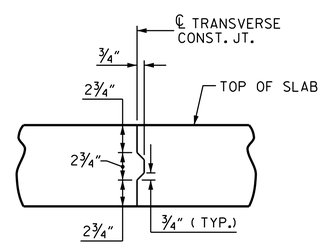

TRANSVERSE CONSTRUCTION JOINT DETAIL

NOTE: REINFORCING STEEL IN SLAB NOT SHOWN. LONGITUDINAL REINFORCING STEEL SHALL BE CONTINUOUS THRU JOINT

PROJECT NO. B-5831
SURRY/YADKIN COUNTY
STATION: 32+28.00 -L-

SHEET 1 OF 2

NORTH CAROLINA PROFESSIONAL SEAL 20125 ENGINEER MARSHALL G. CHECK, JR.
Marshall G. Check, Jr.
5FBCC2F3A4DC413...
9/23/2025

DOCUMENT NOT CONSIDERED FINAL UNLESS ALL SIGNATURES COMPLETED

TGS ENGINEERS
706 HILLSBOROUGH STREET
SUITE 200
RALEIGH, NC 27603
PH (919) 773-8887
CORP. LICENSE NO.: C-0275

STATE OF NORTH CAROLINA
DEPARTMENT OF TRANSPORTATION
RALEIGH

SUPERSTRUCTURE

CONCRETE DECK POUR SEQUENCE

REVISIONS						SHEET NO.
NO.	BY:	DATE:	NO.	BY:	DATE:	S-37
1			3			TOTAL SHEETS
2			4			61

DRAWN BY :	S. B. WILLIAMS	DATE :	5-24
CHECKED BY :	MGC	DATE :	5-24
DESIGN ENGINEER OF RECORD:	MGC	DATE :	8-24

$$$$$$$SYSTIME$$$$$
$$$$$$$$$$$$$$$$$$$$$$$$DGN$$$$$$$$$$$$$$$$$$$$$$$$
$$$$USERNAME$$$$

REINFORCING BAR SCHEDULE

SPANS A-B

BAR	No.	SIZE	TYPE	LENGTH	WEIGHT
✱ A1	349	#5	STR.	50'-11"	18534
A2	349	#5	STR.	50'-11"	18534
B1	144	#5	STR.	56'-2"	8436
✱ B2	80	#4	STR.	31'-10"	1701
✱ B3	80	#6	STR.	39'-5"	4736
✱ B4	37	#6	STR.	33'-0"	1834
✱ B5	120	#4	STR.	29'-3"	2345
✱ G1	2	#5	STR.	50'-11"	106
✱ J1	96	#4	7	1'-5"	91
✱ K1	8	#8	2	13'-9"	294
✱ K2	16	#8	3	18'-10"	805
K3	10	#4	STR	6'-3"	42
K4	40	#4	STR	7'-6"	200
K5	10	#4	STR	3'-9"	25
K6	12	#4	STR	22'-5"	180
✱ S1	50	#5	1	6'-2"	322
S2	195	#4	6	2'-9"	358
U1	25	#4	4	16'-8"	278
U2	10	#4	5	9'-10"	66
U3	10	#4	5	9'-0"	60

REINFORCING STEEL 28,179 LBS.

✱ EPOXY COATED REINFORCING STEEL 30,768 LBS.

SPANS C-D-E

BAR	No.	SIZE	TYPE	LENGTH	WEIGHT
✱ A1	599	#5	STR.	50'-11"	31811
A2	599	#5	STR.	50'-11"	31811
B6	252	#5	STR.	55'-3"	14522
✱ B7	120	#4	STR.	27'-7"	2211
✱ B8	160	#6	STR.	44'-8"	10734
✱ B9	74	#6	STR.	38'-3"	4251
✱ B10	80	#4	STR.	23'-11"	1278
✱ B11	120	#4	STR.	29'- 3"	2345
✱ G1	2	#5	STR.	50'-11"	106
✱ J1	96	#4	7	1'-5"	91
✱ K1	8	#8	2	13'-9"	294
✱ K2	16	#8	3	18'-10"	805
K3	20	#4	STR	6'-3"	84
K4	80	#4	STR	7'-6"	401
K5	20	#4	STR	3'-9"	50
K6	24	#4	STR	22'-5"	359
✱ S1	50	#5	1		322
S2	390	#4	6	2'-9"	716
U1	50	#4	4	16'-8"	557
U2	20	#4	5	9'-10"	131
U3	20	#4	5	9'-0"	120

REINFORCING STEEL 48,751 LBS.

✱ EPOXY COATED REINFORCING STEEL 54,248 LBS.

SPANS F-G

BAR	No.	SIZE	TYPE	LENGTH	WEIGHT
✱ A1	349	#5	STR.	50'-11"	18534
A2	349	#5	STR.	50'-11"	18534
B1	144	#5	STR.	56'-2"	8436
✱ B12	120	#4	STR.	30'-5"	2438
✱ B13	80	#6	STR.	39'-5"	4736
✱ B14	37	#6	STR.	33'-0"	1834
✱ B15	80	#4	STR.	30'-1"	1608
✱ G1	2	#5	STR.	50'-11"	106
✱ J1	96	#4	7	1'-5"	91
✱ K1	8	#8	6	13'-9"	294
✱ K2	16	#8	3	18'-10"	805
K3	10	#4	STR	6'-3"	42
K4	40	#4	STR	7'-6"	200
K5	10	#4	STR	3'-9"	25
K6	12	#4	STR	22'-5"	180
✱ S1	50	#5	1	6'-2"	322
S2	195	#4	6	2'-9"	358
U1	25	#4	4	16'-8"	278
U2	10	#4	5	9'-10"	66
U3	10	#4	5	9'-0"	60

REINFORCING STEEL 28,179 LBS.

✱ EPOXY COATED REINFORCING STEEL 30,768 LBS.

BAR TYPES

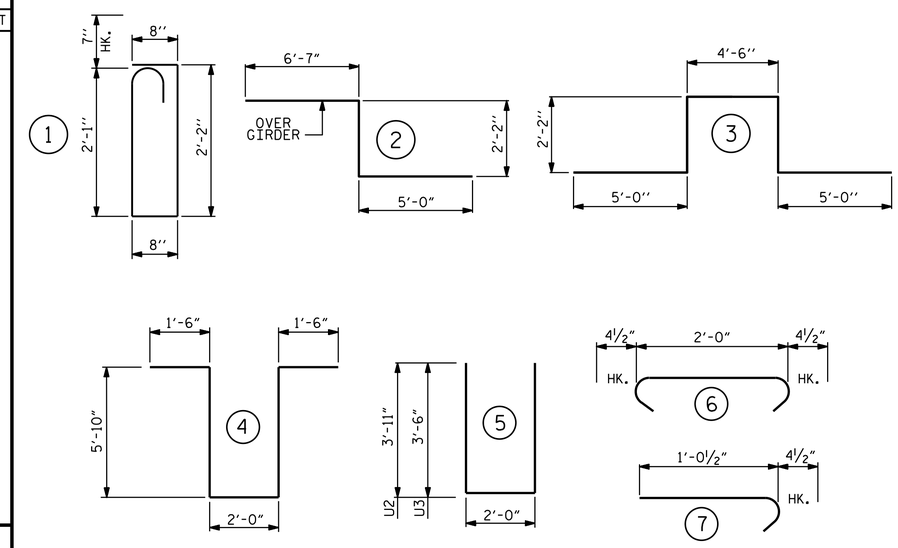

ALL BAR DIMENSIONS ARE OUT TO OUT.

SUPERSTRUCTURE REINFORCING STEEL LENGTHS ARE BASED ON THE FOLLOWING MINIMUM SPLICE LENGTHS

BAR SIZE	SUPERSTRUCTURE EXCEPT APPROACH SLABS, PARAPETS, AND BARRIER RAILS		APPROACH SLABS		PARAPETS AND BARRIER RAILS
	EPOXY COATED	UNCOATED	EPOXY COATED	UNCOATED	
#4	1'-11"	1'-7"	1'-11"	1'-7"	2'-6"
#5	2'-5"	2'-0"	2'-5"	2'-0"	3'-1"
#6	2'-10"	2'-5"	3'-7"	2'-5"	3'-8"
#7	4'-2"	2'-9"			
#8	4'-9"	3'-2"			

GROOVING BRIDGE FLOORS

APPROACH SLABS	2,190 SQ.FT.
BRIDGE DECK	36,430 SQ.FT.
TOTAL	38,620 SQ.FT.

CLASS AA CONCRETE BREAKDOWN

SPANS A-B	
POUR #1	157.0 CU. YDS.
POUR #2	243.8 CU. YDS.
TOTAL	400.8 CU. YDS.
SPANS C-D-E	
POUR #1	204.2 CU. YDS.
POUR #2	238.8 CU. YDS.
POUR #3	243.8 CU. YDS.
TOTAL	686.8 CU. YDS.
SPANS F-G	
POUR #1	147.9 CU. YDS.
POUR #2	252.8 CU. YDS.
TOTAL	400.7 CU. YDS.

FOR LOCATION OF POURS, SEE "CONCRETE DECK POUR SEQUENCE" SHEET

SUPERSTRUCTURE BILL OF MATERIAL

	CLASS AA CONCRETE	REINFORCING STEEL	EPOXY COATED REINFORCING STEEL
SPANS A-B	400.8	28,179	30,768
SPANS C-D-E	686.8	48,751	54,248
SPANS F-G	400.7	28,179	30,768
✱✱ TOTALS	1488.3	105,109	115,784

✱✱ QUANTITIES FOR CONCRETE BARRIER RAIL ARE NOT INCLUDED

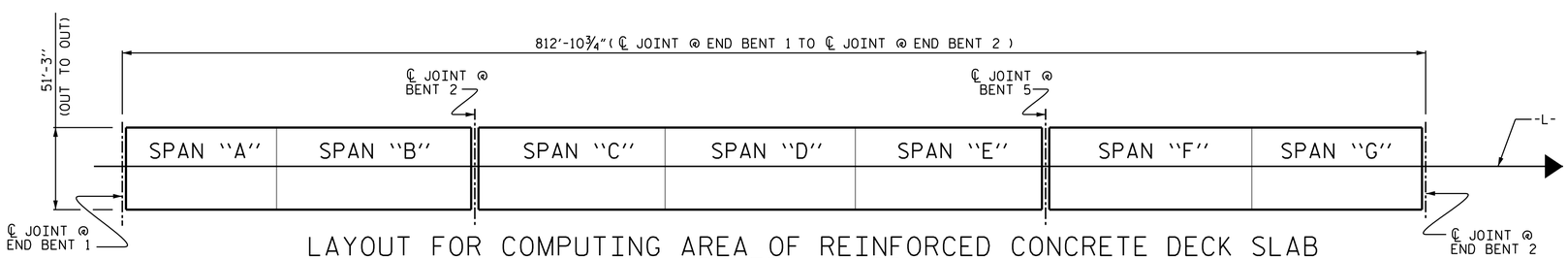

LAYOUT FOR COMPUTING AREA OF REINFORCED CONCRETE DECK SLAB
(SQ. FT. = 41,660)

PROJECT NO. B-5831
SURRY/YADKIN COUNTY
STATION: 32+28.00 -L-

SHEET 2 OF 2

NORTH CAROLINA PROFESSIONAL SEAL 20125 ENGINEER MARSHALL G. CHECK, JR.
5FBCC2F3A4DC413...
9/23/2025

DOCUMENT NOT CONSIDERED FINAL UNLESS ALL SIGNATURES COMPLETED

TGS ENGINEERS
706 HILLSBOROUGH STREET
SUITE 200
RALEIGH, NC 27603
PH (919) 773-8887
CORP. LICENSE NO.: C-0275

STATE OF NORTH CAROLINA
DEPARTMENT OF TRANSPORTATION
RALEIGH

SUPERSTRUCTURE BILL OF MATERIAL

REVISIONS						SHEET NO.
NO.	BY:	DATE:	NO.	BY:	DATE:	S-38
1			3			TOTAL SHEETS
2			4			61

DRAWN BY : S.B. WILLIAMS DATE : 5-24
CHECKED BY : MGC DATE : 8-24
DESIGN ENGINEER OF RECORD: MGC DATE : 12-24

12/19/2024
g:\workdir\ncdot-pw.bentley.com.ncdot-pw-01\zachary smith\d0166590\401_077_B-5831_SMU_BOM2_850006.dgn
ZSmith

NOTES :

STIRRUPS IN CAP MAY BE SHIFTED AS NECESSARY TO CLEAR ANCHOR BOLTS.

FOR PILE SPLICE DETAILS, SEE SHEET 4 OF 4.

FOR WING DETAILS, SEE SHEET 2 OF 4.

BACKWALL SHALL BE PLACED BEFORE APPLYING THE EPOXY PROTECTIVE COATING.

THE TOP SURFACE AREAS OF THE END BENT CAP SHALL BE CURED IN ACCORDANCE WITH THE STANDARD SPECIFICATIONS EXCEPT THAT THE MEMBRANE CURING COMPOUND METHOD SHALL NOT BE USED.

THE TOP SURFACE OF THE END BENT CAP EXCEPT THE BRIDGE SEAT BUILDUPS SHALL BE SLOPED TRANSVERSELY FROM THE FILL FACE TO THE BACK FACE AT THE RATE OF 2%.

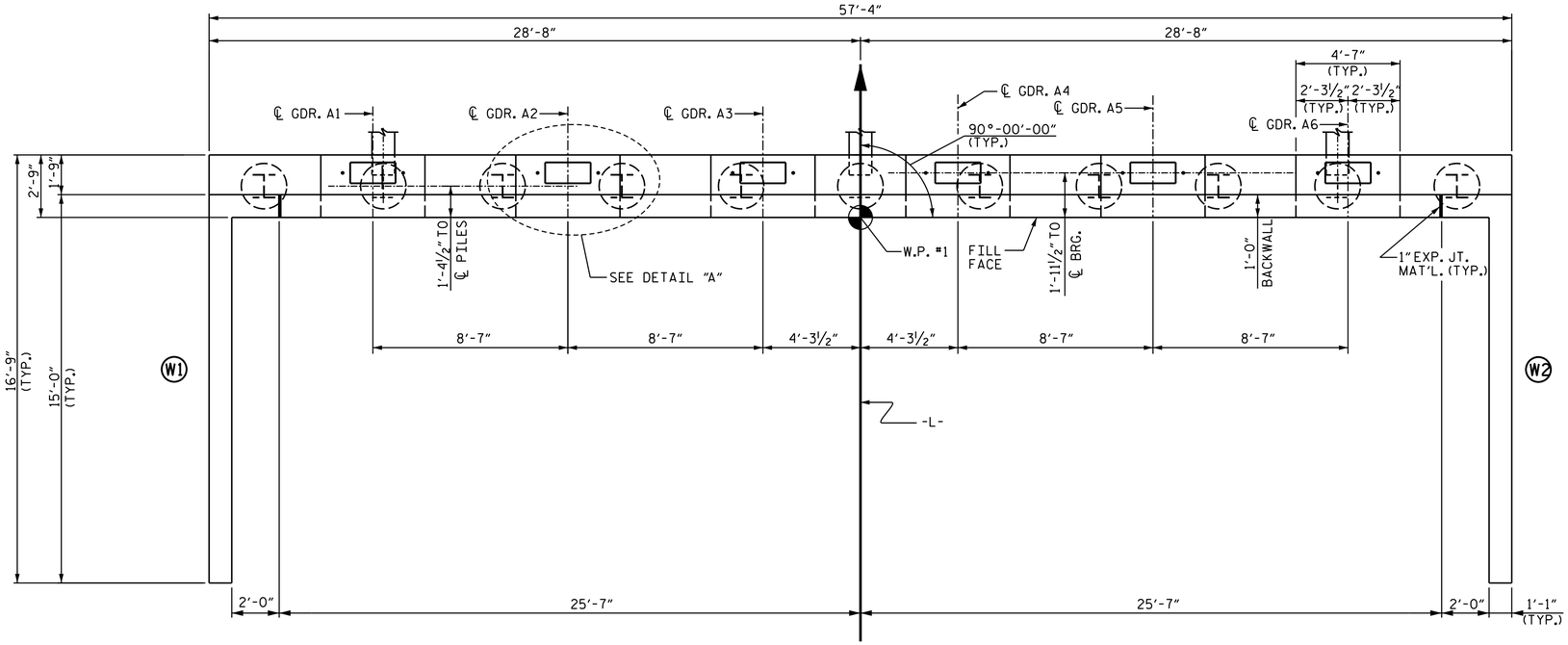

PLAN

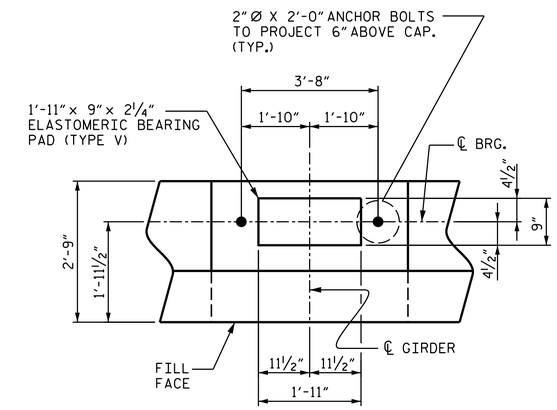

DETAIL "A"

TYPICAL EACH GIRDER

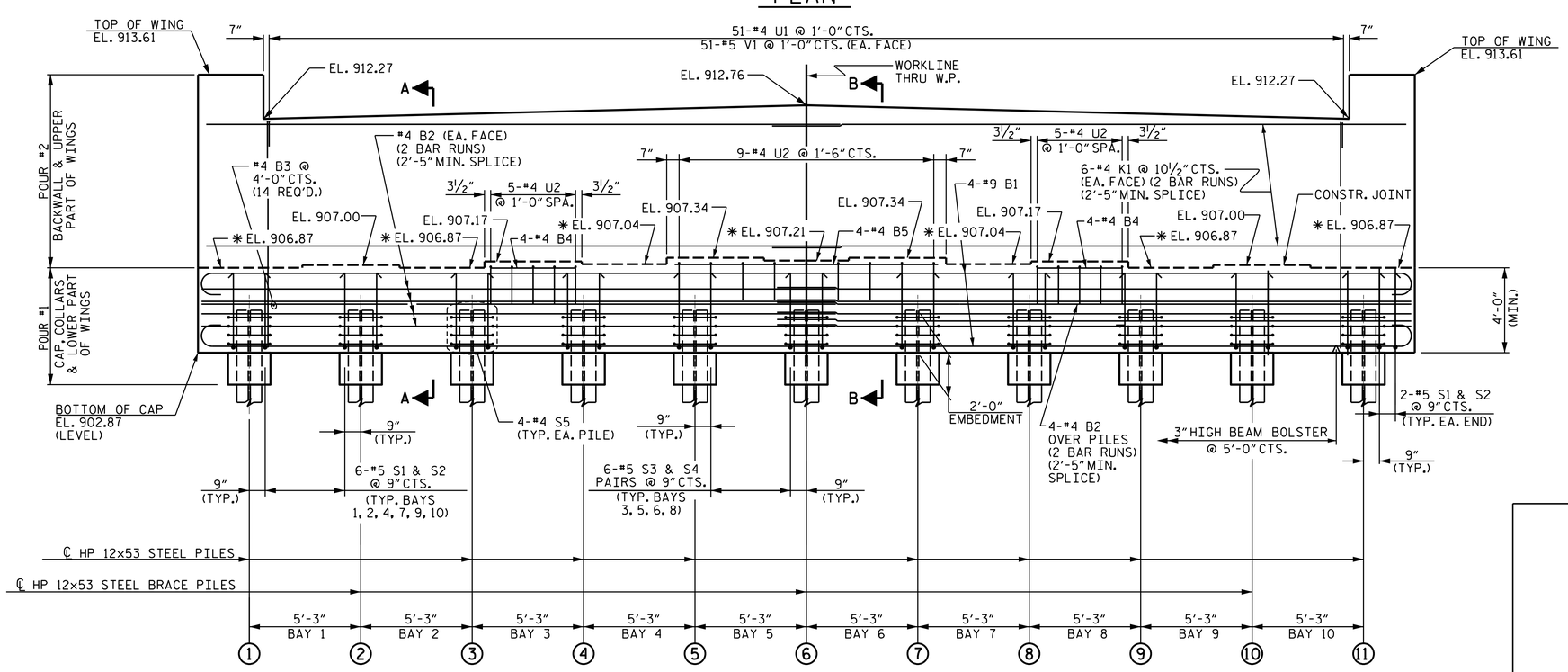

ELEVATION

(WINGS NOT SHOWN FOR CLARITY)

✱ FOR LOCATION OF ELEVATION BETWEEN BRIDGE SEAT BUILD-UPS, SEE SECTIONS A-A & B-B, SHEET 4 OF 4.

PROJECT NO. B-5831

SURRY/YADKIN COUNTY

STATION: 32+28.00 -L-

SHEET 1 OF 4

DRAWN BY :	ZCS	DATE :	5/24
CHECKED BY :	MGC	DATE :	5/24
DESIGN ENGINEER OF RECORD :	ZCS	DATE :	5/24

NORTH CAROLINA PROFESSIONAL SEAL 20125 ENGINEER MARTHA G. CHECK, JR.

DocuSigned by: Martha G. Check, Jr.
5FBCC2F3A4DC413...

9/23/2025

DOCUMENT NOT CONSIDERED FINAL UNLESS ALL SIGNATURES COMPLETED

TGS ENGINEERS
706 HILLSBOROUGH STREET
SUITE 200
RALEIGH, NC 27603
PH (919) 773-8887
CORP. LICENSE NO.: C-0275

STATE OF NORTH CAROLINA
DEPARTMENT OF TRANSPORTATION
RALEIGH

SUBSTRUCTURE

END BENT 1

REVISIONS							
NO.	BY:	DATE:	NO.	BY:	DATE:	SHEET NO.	S-39
1			3			TOTAL SHEETS	61
2			4				

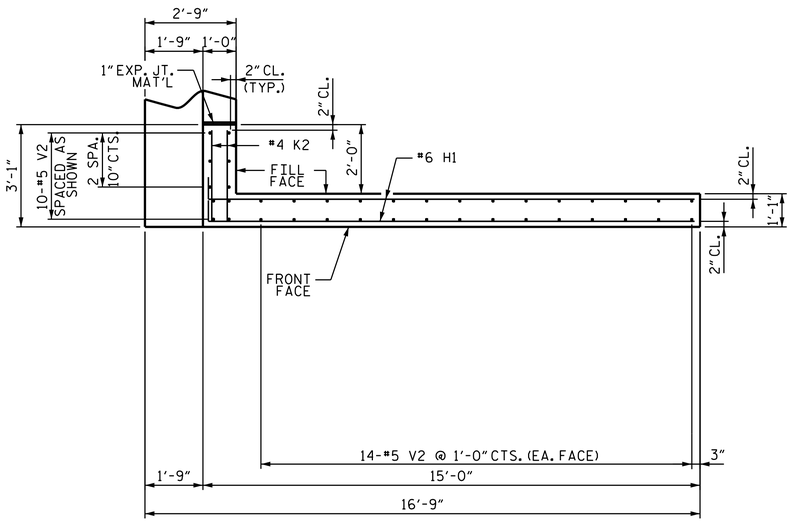

PLAN OF WING (W1)

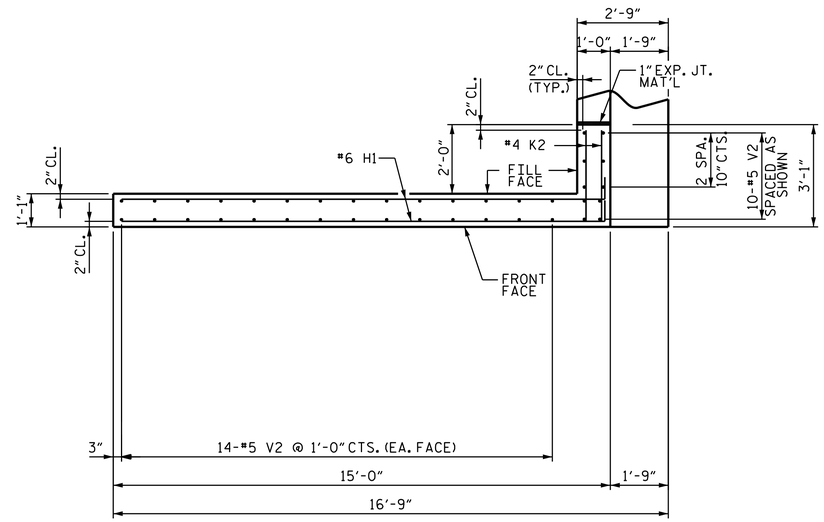

PLAN OF WING (W2)

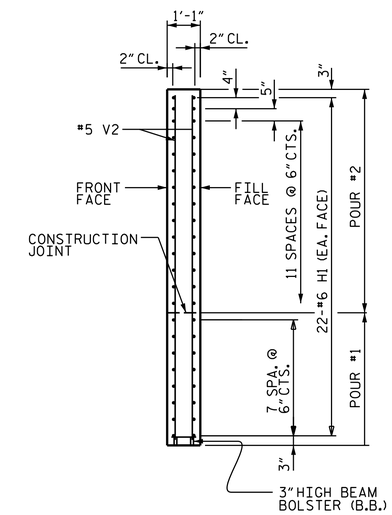

SECTION X-X

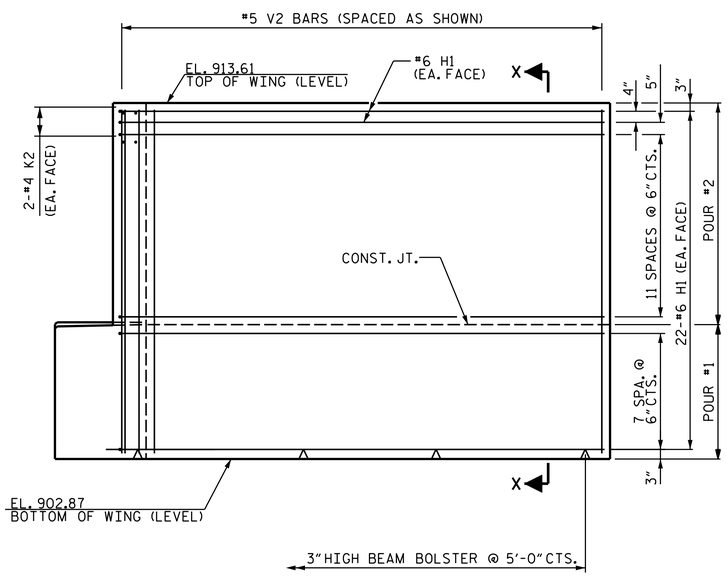

ELEVATION OF WING (W1)

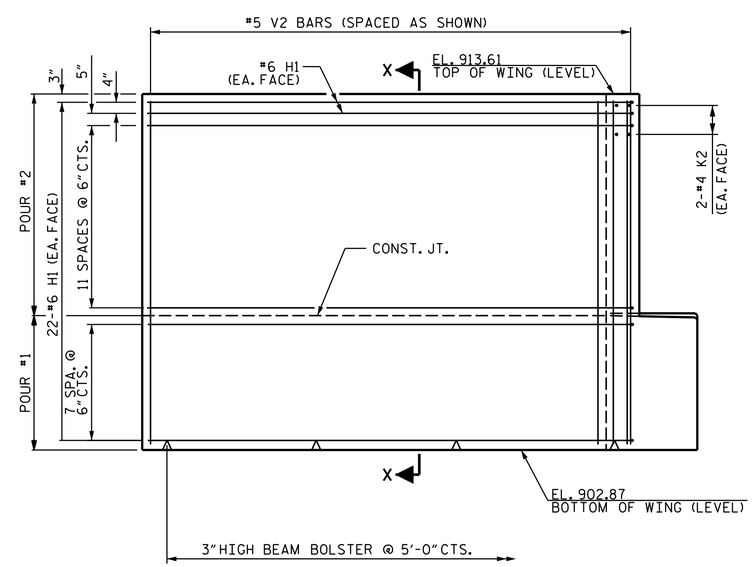

ELEVATION OF WING (W2)

PROJECT NO. B-5831

SURRY/YADKIN COUNTY

STATION: 32+28.00 -L-

SHEET 2 OF 4

NORTH CAROLINA PROFESSIONAL SEAL 20125 ENGINEER MARSHALL G. CHECK, JR.

Marshall G. Check, Jr.

9/23/2025

DOCUMENT NOT CONSIDERED FINAL UNLESS ALL SIGNATURES COMPLETED

TGS ENGINEERS
706 HILLSBOROUGH STREET
SUITE 200
RALEIGH, NC 27603
PH (919) 773-8887
CORP. LICENSE NO.: C-0275

STATE OF NORTH CAROLINA
DEPARTMENT OF TRANSPORTATION
RALEIGH

SUBSTRUCTURE

END BENT 1 WING DETAILS

REVISIONS						
NO.	BY:	DATE:	NO.	BY:	DATE:	
1			3			
2			4			

SHEET NO. S-40

TOTAL SHEETS 61

DRAWN BY :	ZCS	DATE :	5/24
CHECKED BY :	MGC	DATE :	5/24
DESIGN ENGINEER OF RECORD :	ZCS	DATE :	5/24

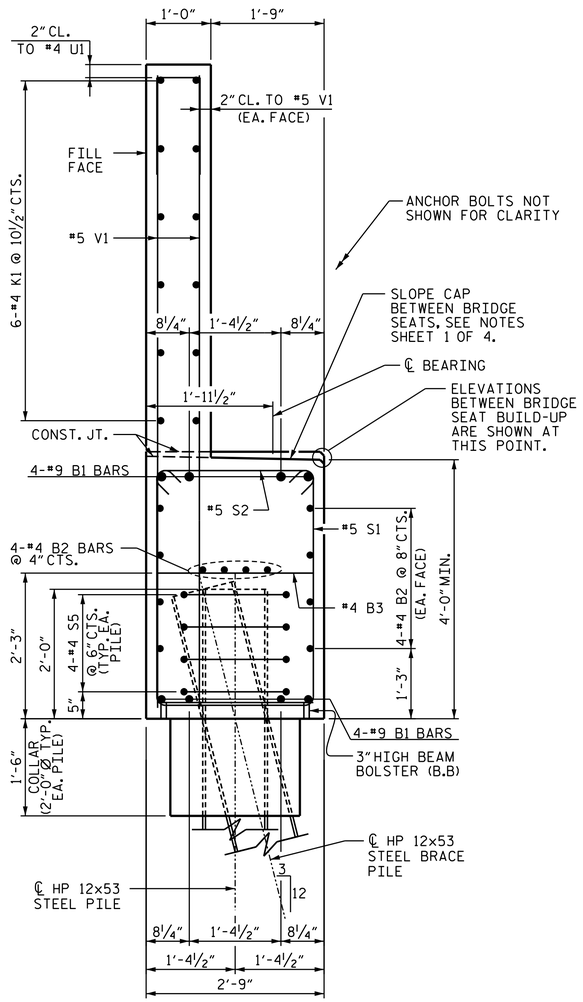

SECTION A-A

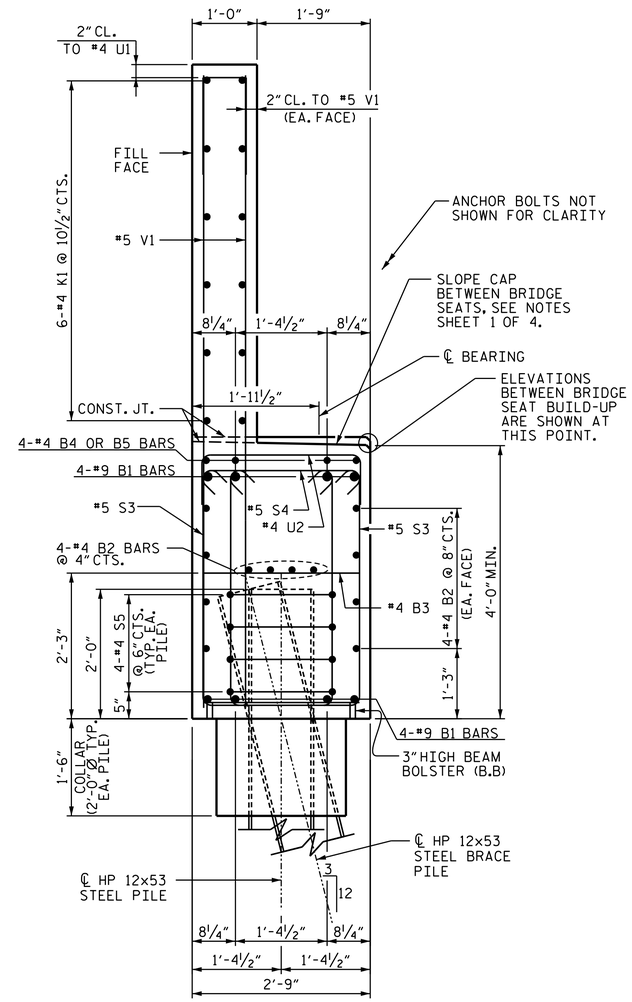

SECTION B-B

PROJECT NO. B-5831

SURRY/YADKIN COUNTY

STATION: 32+28.00 -L-

SHEET 3 OF 4

NORTH CAROLINA PROFESSIONAL SEAL 20125 ENGINEER MARSHALL G. CHECK, JR.

Signed by: Marshall G. Check, Jr.
5FBCC2F3A4DC413...

9/23/2025

DOCUMENT NOT CONSIDERED FINAL UNLESS ALL SIGNATURES COMPLETED

TGS ENGINEERS
706 HILLSBOROUGH STREET
SUITE 200
RALEIGH, NC 27603
PH (919) 773-8887
CORP. LICENSE NO.: C-0275

STATE OF NORTH CAROLINA
DEPARTMENT OF TRANSPORTATION
RALEIGH

SUBSTRUCTURE

END BENT 1 DETAILS

REVISIONS						
NO.	BY:	DATE:	NO.	BY:	DATE:	
1			3			
2			4			

SHEET NO. S-41

TOTAL SHEETS 61

DRAWN BY :	ZCS	DATE :	5/24
CHECKED BY :	MGC	DATE :	5/24
DESIGN ENGINEER OF RECORD :	ZCS	DATE :	5/24

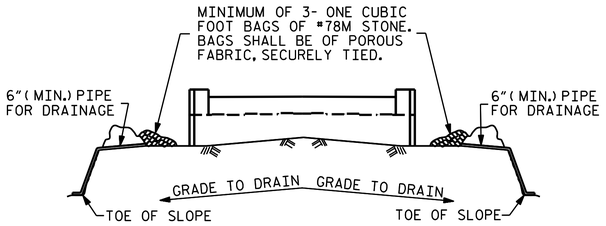

BAGGED STONE AND PIPE SHALL BE PLACED IMMEDIATELY AFTER COMPLETION OF END BENT EXCAVATION. PIPE MAY BE EITHER CONCRETE, CORRUGATED STEEL, CORRUGATED ALUMINUM ALLOY, OR CORRUGATED PLASTIC. PERFORATED PIPE WILL NOT BE ALLOWED.

BAGGED STONE SHALL REMAIN IN PLACE UNTIL THE ENGINEER DIRECTS THAT IT BE REMOVED. THE CONTRACTOR SHALL REMOVE AND DISPOSE OF SILT ACCUMULATIONS AT BAGGED STONE WHEN SO DIRECTED BY THE ENGINEER. BAGS SHALL BE REMOVED AND REPLACED WHENEVER THE ENGINEER DETERMINES THAT THEY HAVE DETERIORATED AND LOST THEIR EFFECTIVENESS.

NO SEPARATE PAYMENT WILL BE MADE FOR THIS WORK AND THE ENTIRE COST OF THIS WORK SHALL BE INCLUDED IN THE UNIT CONTRACT PRICE BID FOR THE SEVERAL PAY ITEMS.

TEMPORARY DRAINAGE AT END BENT

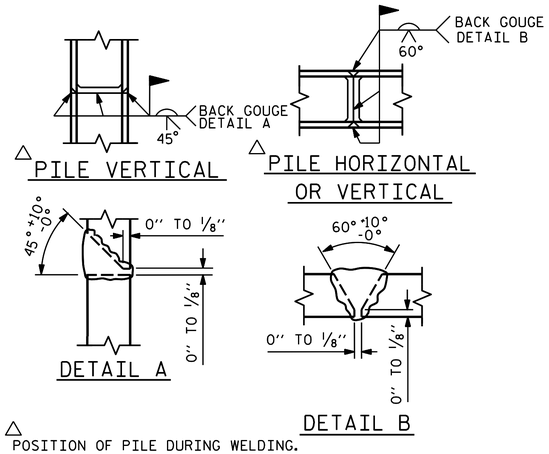

△ POSITION OF PILE DURING WELDING.

PILE SPLICE DETAILS

BAR TYPES

ALL BAR DIMENSIONS ARE OUT TO OUT.

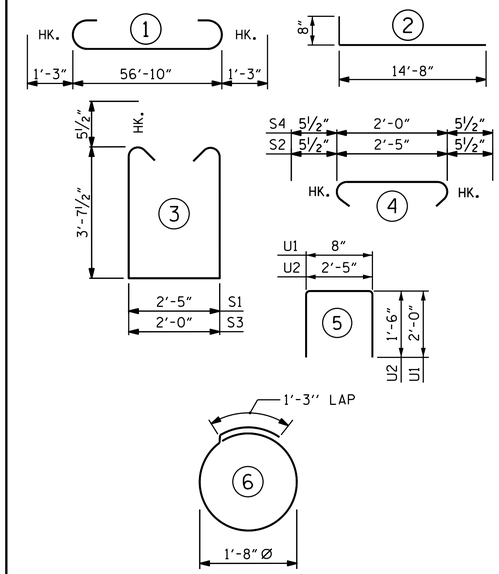

BILL OF MATERIAL

END BENT 1

BAR	NO.	SIZE	TYPE	LENGTH	WEIGHT
B1	8	#9	1	59'-4"	1,614
B2	24	#4	STR	29'-9"	477
B3	14	#4	STR	2'-5"	23
B4	8	#4	STR	4'-3"	23
B5	4	#4	STR	12'-8"	34
H1	88	#6	2	15'-4"	2,027
K1	24	#4	STR.	29'-9"	477
K2	8	#4	STR.	2'-8"	14
S1	40	#5	3	10'-7"	442
S2	40	#5	4	3'-4"	139
S3	48	#5	3	10'-2"	509
S4	48	#5	4	2'-11"	146
S5	44	#4	6	6'-6"	191
U1	51	#4	5	4'-8"	159
U2	19	#4	5	5'-5"	69
V1	102	#5	STR.	9'-0"	957
V2	76	#5	STR.	10'-4"	819
REINFORCING STEEL					8,120 LBS.

CLASS A CONCRETE BREAKDOWN

POUR #1	CAP, LOWER PART OF WINGS & COLLARS	30.9 C.Y.
POUR #2	BACKWALL AND UPPER PART OF WINGS	19.5 C.Y.
TOTAL CLASS A CONCRETE		50.4 C.Y.

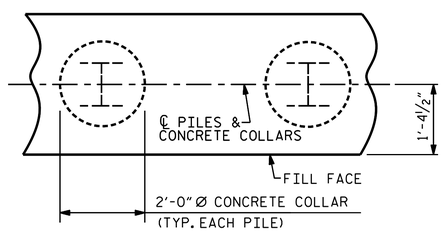

PLAN

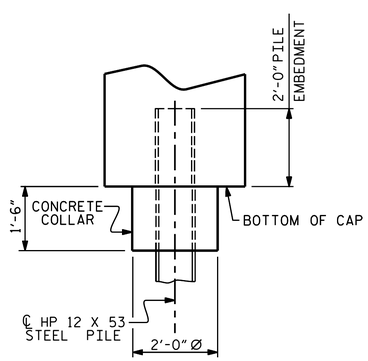

ELEVATION

CORROSION PROTECTION FOR STEEL PILES DETAIL

PROJECT NO. B-5831

SURRY/YADKIN COUNTY

STATION: 32+28.00 -L-

SHEET 4 OF 4

NORTH CAROLINA PROFESSIONAL SEAL 20125 ENGINEER MARSHALL G. CHEEK, JR.

Marshall G. Cheek, Jr.
5FBCC2F3A4DC413...

9/23/2025

DOCUMENT NOT CONSIDERED FINAL UNLESS ALL SIGNATURES COMPLETED

TGS ENGINEERS
706 HILLSBOROUGH STREET
SUITE 200
RALEIGH, NC 27603
PH (919) 773-8887
CORP. LICENSE NO.: C-0275

STATE OF NORTH CAROLINA
DEPARTMENT OF TRANSPORTATION
RALEIGH

SUBSTRUCTURE

END BENT 1 DETAILS

REVISIONS						
NO.	BY:	DATE:	NO.	BY:	DATE:	
1			3			
2			4			

SHEET NO. S-42

TOTAL SHEETS 61

DRAWN BY :	ZCS	DATE :	5/24
CHECKED BY :	MGC	DATE :	5/24
DESIGN ENGINEER OF RECORD :	ZCS	DATE :	5/24

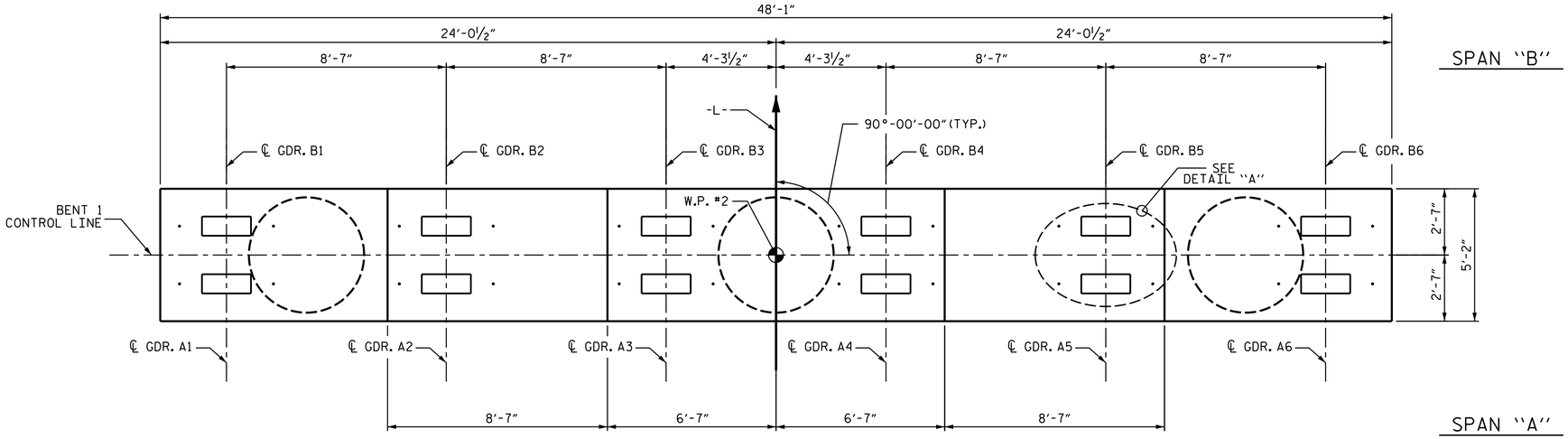

NOTES

STIRRUPS IN CAP MAY BE SHIFTED AS NECESSARY TO CLEAR ANCHOR BOLTS.

HOOKS ON "V" BARS MAY BE TURNED AS NECESSARY FOR PLACING REINFORCING STEEL.

FOR DRILLED PIERS, SEE SECTION 411 OF THE STANDARD SPECIFICATIONS.

ALL STEEL IN THE DRILLED PIERS IS INCLUDED IN THE PAY ITEMS FOR "REINFORCING STEEL" AND "SPIRAL COLUMN REINFORCING STEEL."

★ INVERT ALTERNATE STIRRUPS.

THE LOCATION OF THE CONSTRUCTION JOINT IN THE DRILLED PIERS IS BASED ON AN APPROXIMATE GROUND LINE ELEVATION. IF THE CONSTRUCTION JOINT IS ABOVE THE ACTUAL GROUND LINE ELEVATION, THE CONTRACTOR SHALL PLACE THE CONSTRUCTION JOINT 1 FOOT BELOW THE GROUND LINE.

THE CONTRACTOR'S ATTENTION IS CALLED TO THE FACT THAT THE LONGITUDINAL REINFORCEMENT FOR DRILLED PIERS IS DETAILED WITH 3 FEET OF EXTRA LENGTH.

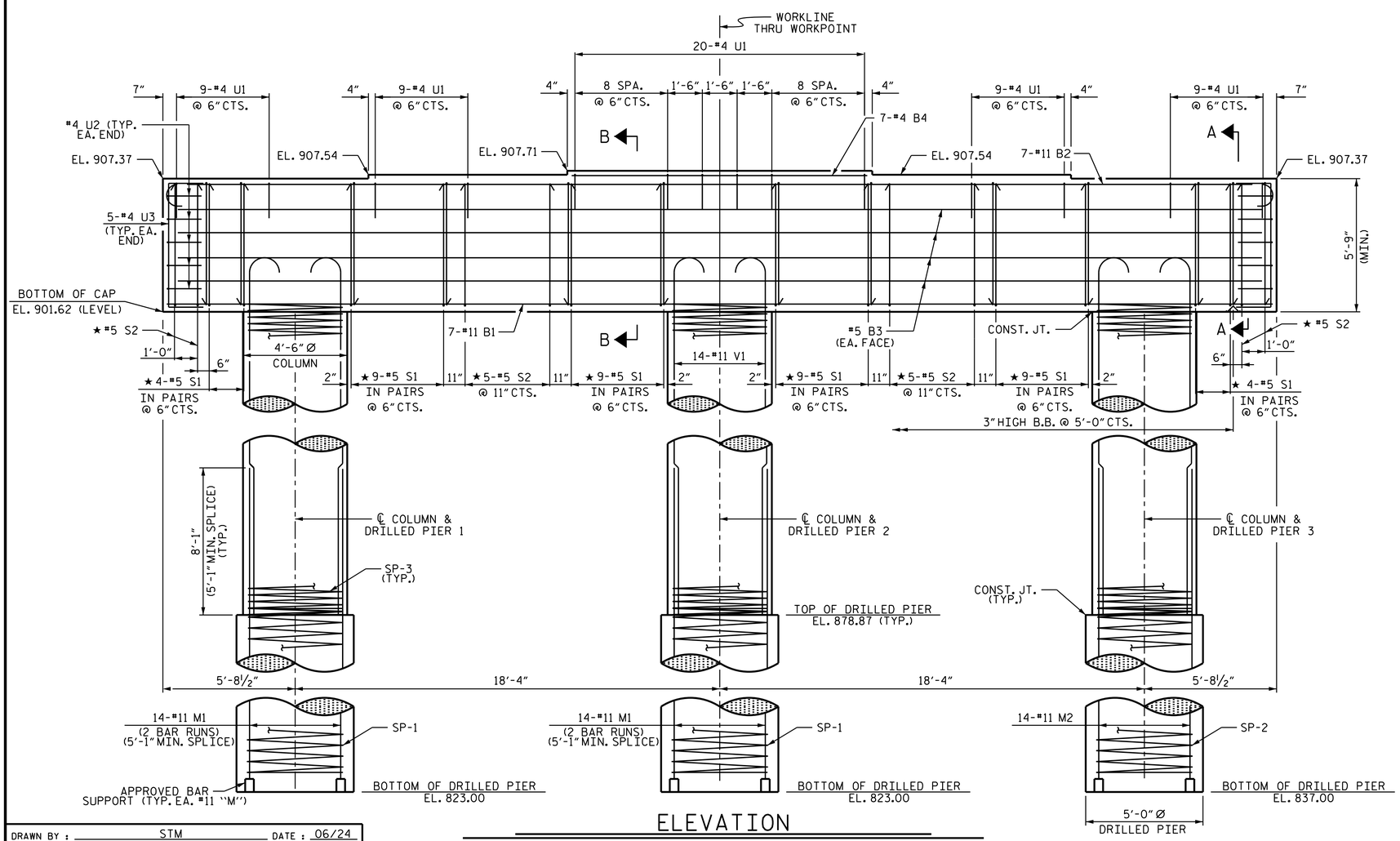

ELEVATION

DIMENSIONS AND REINFORCING STEEL ARE TYPICAL FOR EACH COLUMN & DRILLED PIER EXCEPT AS NOTED.

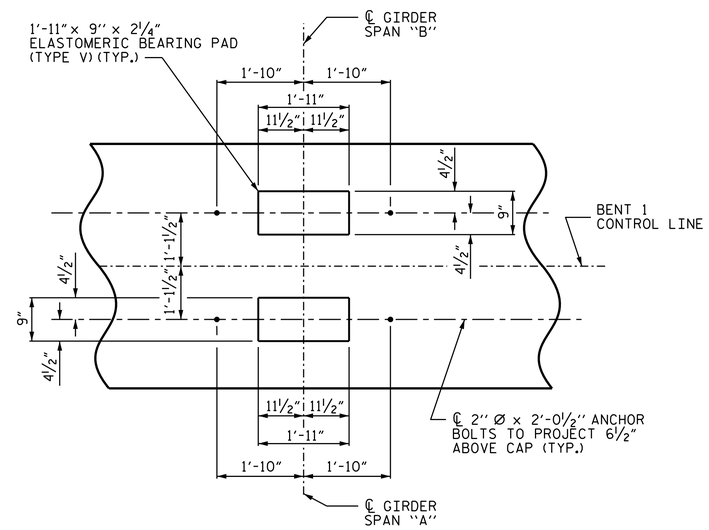

DETAIL "A"

(TYP. EACH GIRDER)

PROJECT NO. B-5831

SURRY/YADKIN COUNTY

STATION: 32+28.00 -L-

SHEET 1 OF 2

NORTH CAROLINA PROFESSIONAL SEAL 20125 ENGINEER MARSHALL G. CHEEK, JR.

Marshall G. Cheek, Jr.

5FBCCF3A4DC413...

9/23/2025

DOCUMENT NOT CONSIDERED FINAL UNLESS ALL SIGNATURES COMPLETED

TGS ENGINEERS
706 HILLSBOROUGH STREET
SUITE 200
RALEIGH, NC 27603
PH (919) 773-8887
CORP. LICENSE NO.: C-0275

STATE OF NORTH CAROLINA
DEPARTMENT OF TRANSPORTATION
RALEIGH

SUBSTRUCTURE

BENT 1

REVISIONS						
NO.	BY:	DATE:	NO.	BY:	DATE:	
1			3			
2			4			

SHEET NO. S-43

TOTAL SHEETS 61

DRAWN BY :	STM	DATE :	06/24
CHECKED BY :	MGC	DATE :	07/24
DESIGN ENGINEER OF RECORD:	STM	DATE :	12/24

12/18/2024
c:\workdir\ncdot-pw.bentley.com_ncdot-pw-01\zachary smith\d0166590\B-5831-SMU-B101-850006.dgn
ZSmith

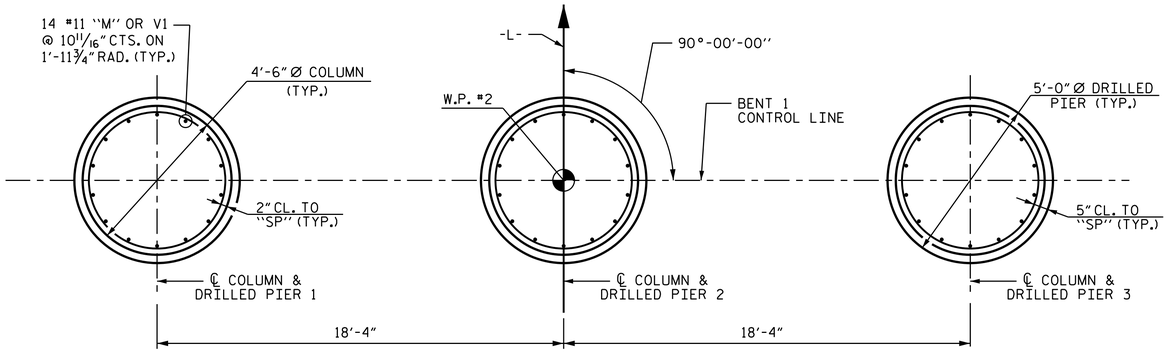

PLAN OF DRILLED PIERS & COLUMNS

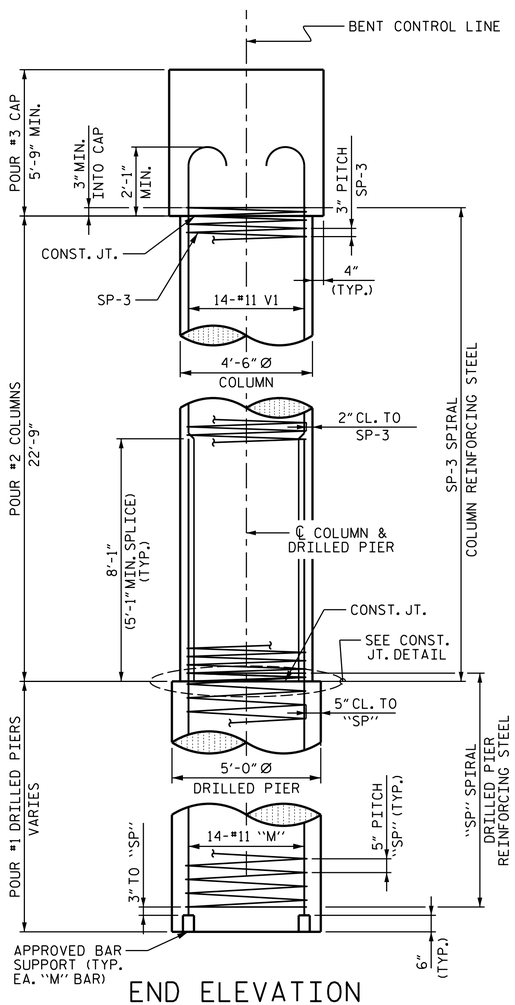

END ELEVATION

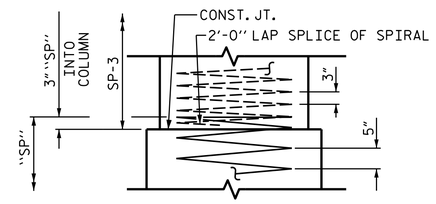

CONSTRUCTION JOINT DETAIL

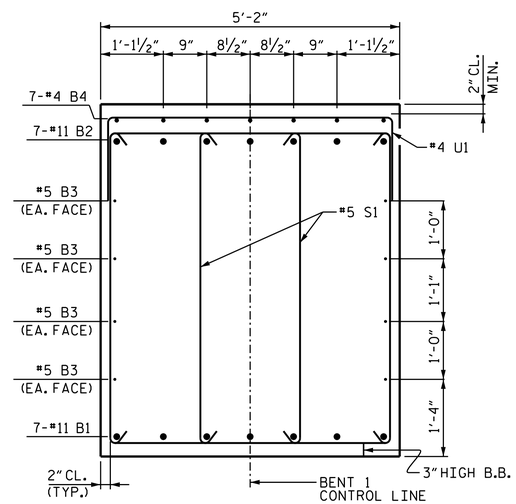

SECTION B-B

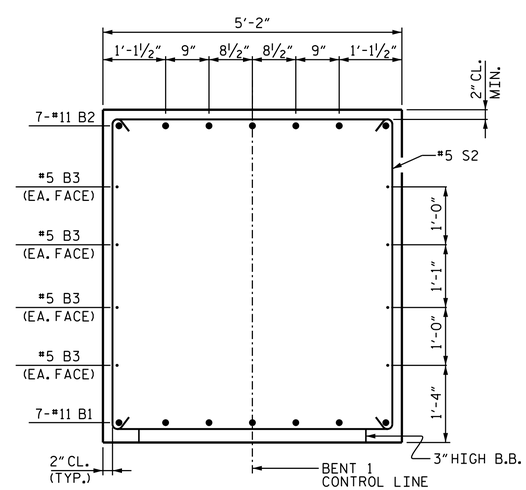

SECTION A-A

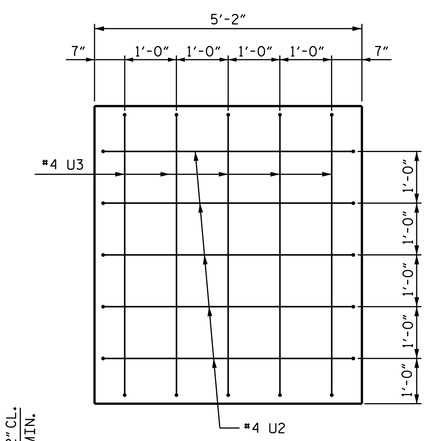

END VIEW

(TYP. EA. END)

BAR TYPES

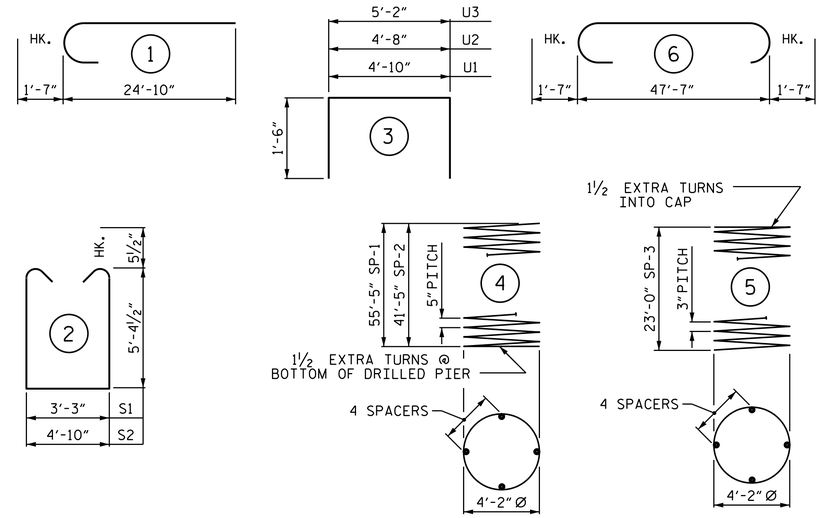

ALL BAR DIMENSIONS ARE OUT TO OUT

BILL OF MATERIAL
FOR BENT 1

BAR	NO.	SIZE	TYPE	LENGTH	WEIGHT
B1	7	#11	STR	47'-9"	1,776
B2	7	#11	6	50'-9"	1,887
B3	8	#5	STR	47'-9"	398
B4	7	#4	STR	12'-9"	60
M1	56	#11	STR	34'-4"	10,215
M2	14	#11	STR	49'-6"	3,682
S1	88	#5	2	14'-11"	1,369
S2	14	#5	2	16'-6"	241
U1	56	#4	3	7'-10"	293
U2	10	#4	3	7'-8"	51
U3	10	#4	3	8'-2"	55
V1	42	#11	1	26'-5"	5,895

REINFORCING STEEL 25,922 LBS.

BAR	NO.	SIZE	TYPE	LENGTH	WEIGHT
SP-1	2	*	4	1,746'-0"	3,642
SP-2	1	*	4	1,306'-3"	1,362
SP-3	3	**	5	1,218'-5"	2,442

SPIRAL COLUMN REINFORCING STEEL 7,446 LBS.

* THE SP-1 & SP-2 SPIRAL REINFORCING STEEL SHALL BE W31 OR D-31 COLD DRAWN WIRE OR #5 PLAIN OR DEFORMED BAR

** THE SP-3 SPIRAL REINFORCING STEEL SHALL BE W20 OR D-20 COLD DRAWN WIRE OR #4 PLAIN OR DEFORMED BAR

CLASS A CONCRETE BREAKDOWN

POUR #2 (COLUMNS)	40.2 C.Y.
POUR #3 (CAP)	54.3 C.Y.
TOTAL CLASS A CONCRETE	94.5 C.Y.

DRILLED PIERS:

DRILLED PIER CONCRETE	
POUR #1	111.7 C.Y.

PROJECT NO. B-5831
SURRY/YADKIN COUNTY
STATION: 32+28.00 -L-

SHEET 2 OF 2

NORTH CAROLINA PROFESSIONAL SEAL 20125 ENGINEER
MARSHALL G. CHESS, JR.
Signed by: Marshall G. Chess, Jr.
5FBCC2F3A4DC413...
9/23/2025

DOCUMENT NOT CONSIDERED FINAL UNLESS ALL SIGNATURES COMPLETED
TGS ENGINEERS
706 HILLSBOROUGH STREET
SUITE 200
RALEIGH, NC 27603
PH (919) 773-8887
CORP. LICENSE NO.: C-0275

STATE OF NORTH CAROLINA
DEPARTMENT OF TRANSPORTATION
RALEIGH

SUBSTRUCTURE
BENT 1

REVISIONS						
NO.	BY:	DATE:	NO.	BY:	DATE:	
1			3			
2			4			

SHEET NO. S-44
TOTAL SHEETS 61

DRAWN BY : STM DATE : 06/24
CHECKED BY : MGC DATE : 07/24
DESIGN ENGINEER OF RECORD: STM DATE : 12/24

12/18/2024
g:\workdir\ncdot-pw.bentley.com_ncdot-pw-01\zachary smith\d0166590\B-5831-SMU-B101-850006.dgn
ZSmith

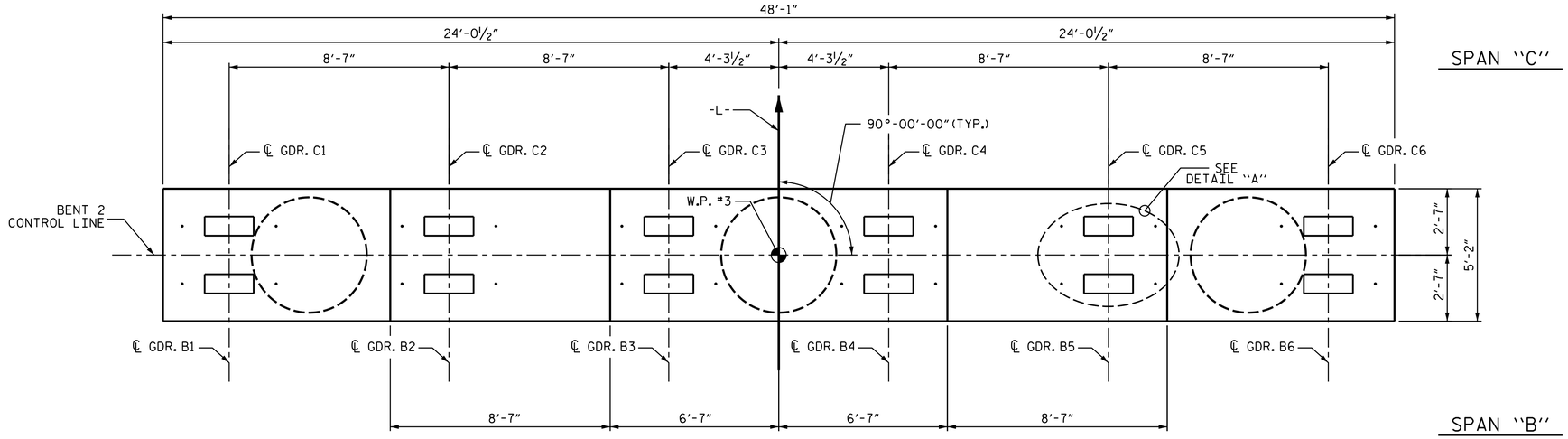

NOTES

STIRRUPS IN CAP MAY BE SHIFTED AS NECESSARY TO CLEAR ANCHOR BOLTS.

HOOKS ON "V" BARS MAY BE TURNED AS NECESSARY FOR PLACING REINFORCING STEEL.

FOR DRILLED PIERS, SEE SECTION 411 OF THE STANDARD SPECIFICATIONS.

ALL STEEL IN THE DRILLED PIERS IS INCLUDED IN THE PAY ITEMS FOR "REINFORCING STEEL" AND "SPIRAL COLUMN REINFORCING STEEL."

★ INVERT ALTERNATE STIRRUPS.

DRILLED PIERS SHALL BE TERMINATED ONE FOOT ± ABOVE WATER SURFACE FOR SHAFTS LOCATED IN WATER.

THE CONTRACTOR'S ATTENTION IS CALLED TO THE FACT THAT THE LONGITUDINAL REINFORCEMENT FOR DRILLED PIERS IS DETAILED WITH 3 FEET OF EXTRA LENGTH.

THE TOP SURFACE AREAS OF THE BENT CAP SHALL BE CURED IN ACCORDANCE WITH THE STANDARD SPECIFICATIONS EXCEPT THAT THE MEMBRANE CURING COMPOUND SHALL NOT BE USED.

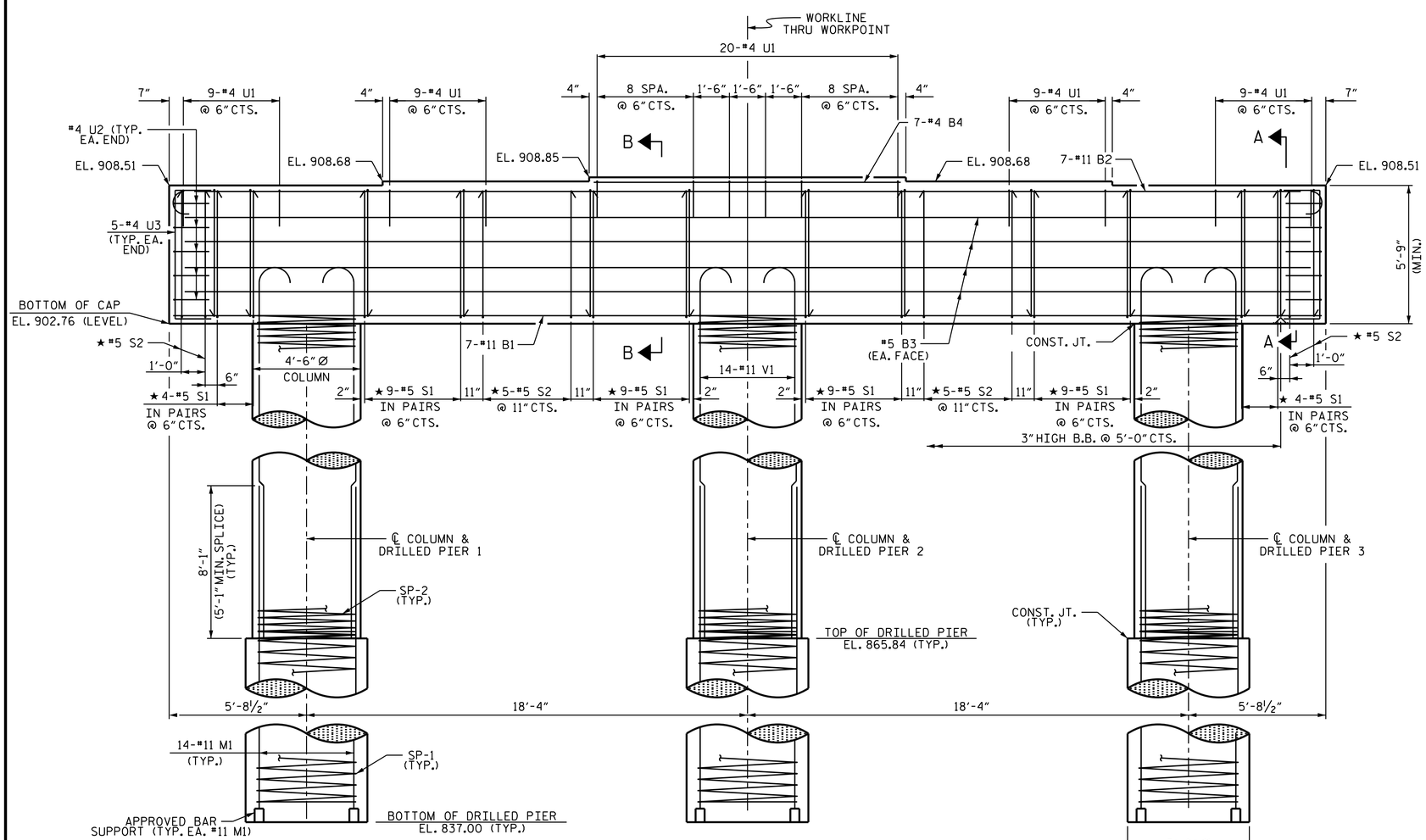

ELEVATION

DIMENSIONS AND REINFORCING STEEL ARE TYPICAL FOR EACH COLUMN & DRILLED PIER EXCEPT AS NOTED.

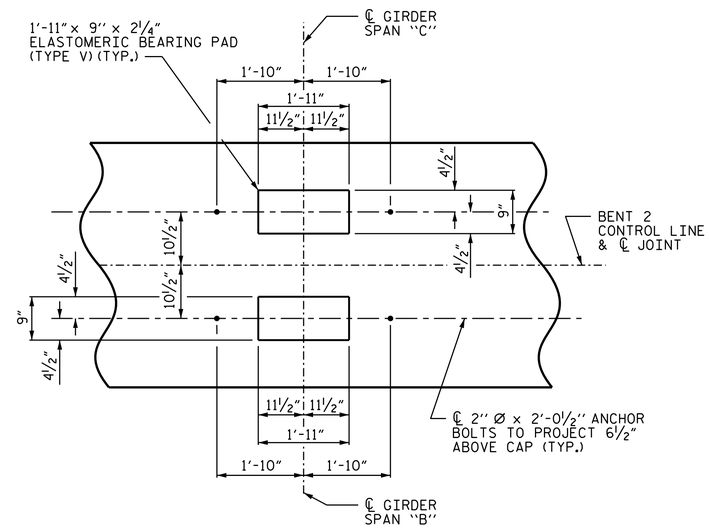

DETAIL "A"

(TYP. EACH GIRDER)

PROJECT NO. B-5831

SURRY/YADKIN COUNTY

STATION: 32+28.00 -L-

SHEET 1 OF 2

NORTH CAROLINA PROFESSIONAL SEAL 20125 ENGINEER MICHAEL G. CHEEK, JR.

5FBCC2F3A4DC413...

9/23/2025

DOCUMENT NOT CONSIDERED FINAL UNLESS ALL SIGNATURES COMPLETED

TGS ENGINEERS
706 HILLSBOROUGH STREET
SUITE 200
RALEIGH, NC 27603
PH (919) 773-8887
CORP. LICENSE NO.: C-0275

STATE OF NORTH CAROLINA
DEPARTMENT OF TRANSPORTATION
RALEIGH

SUBSTRUCTURE

BENT 2

REVISIONS						
NO.	BY:	DATE:	NO.	BY:	DATE:	
1			3			
2			4			

SHEET NO. S-45

TOTAL SHEETS 61

DRAWN BY :	STM	DATE :	07/24
CHECKED BY :	MGC	DATE :	07/24
DESIGN ENGINEER OF RECORD:	STM	DATE :	12/24

12/18/2024
c:\workdir\ncdot-pw.bentley.com_ncdot-pw-01\zachary smith\d0166590\B-5831-SMU-B201-850006.dgn
ZSmith

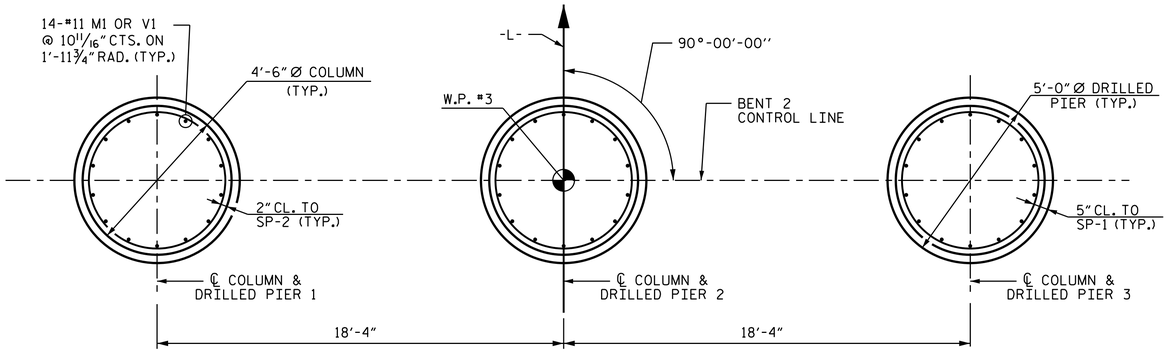

PLAN OF DRILLED PIERS & COLUMNS

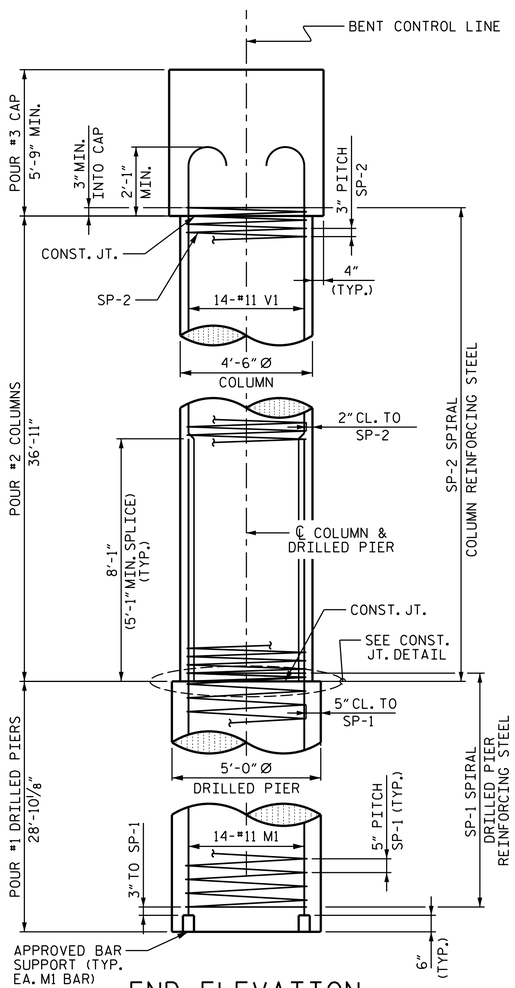

END ELEVATION

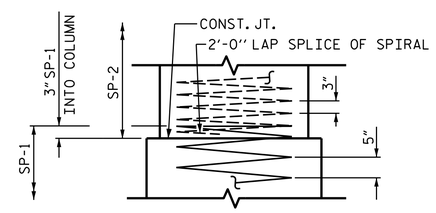

CONSTRUCTION JOINT DETAIL

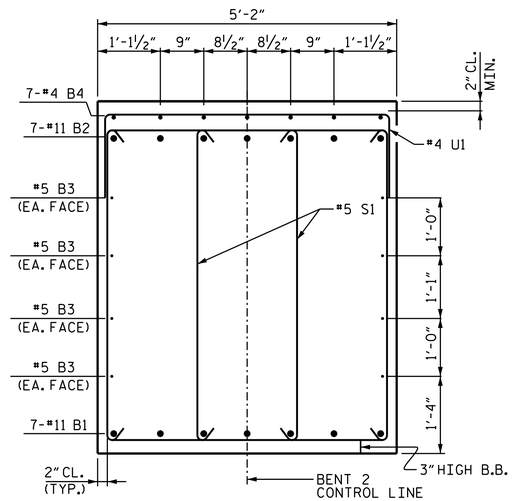

SECTION B-B

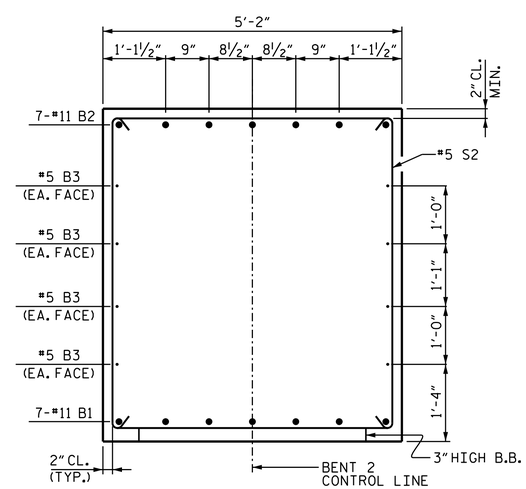

SECTION A-A

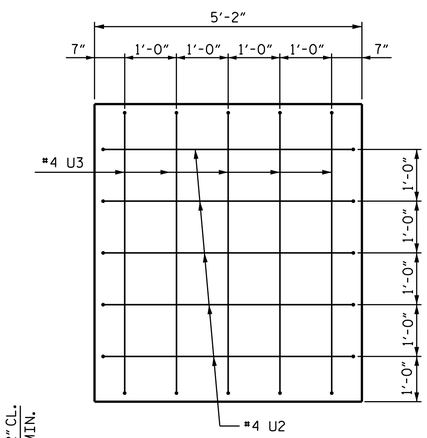

END VIEW

(TYP. EA. END)

BAR TYPES

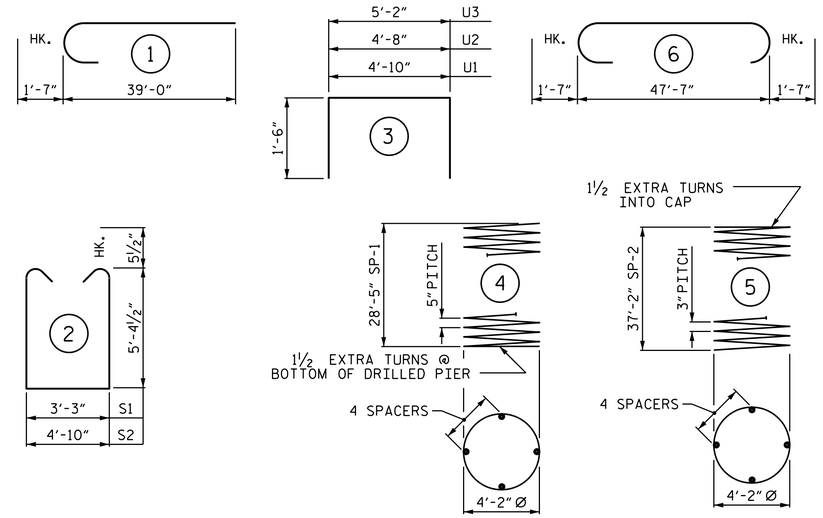

ALL BAR DIMENSIONS ARE OUT TO OUT

BILL OF MATERIAL
FOR BENT 2

BAR	NO.	SIZE	TYPE	LENGTH	WEIGHT
B1	7	#11	STR	47'-9"	1,776
B2	7	#11	6	50'-9"	1,887
B3	8	#5	STR	47'-9"	398
B4	7	#4	STR	12'-9"	60
M1	42	#11	STR	36'-6"	8,145
S1	88	#5	2	14'-11"	1,369
S2	14	#5	2	16'-6"	241
U1	56	#4	3	7'-10"	293
U2	10	#4	3	7'-8"	51
U3	10	#4	3	8'-2"	55
V1	42	#11	1	40'-7"	9,056

REINFORCING STEEL 23,331 LBS.

BAR	NO.	SIZE	TYPE	LENGTH	WEIGHT
SP-1	3	*	4	905'-4"	2,833
SP-2	3	**	5	1,957'-3"	3,922

SPIRAL COLUMN REINFORCING STEEL 6,755 LBS.

* THE SP-1 SPIRAL REINFORCING STEEL SHALL BE W31 OR D-31 COLD DRAWN WIRE OR #5 PLAIN OR DEFORMED BAR

** THE SP-2 SPIRAL REINFORCING STEEL SHALL BE W20 OR D-20 COLD DRAWN WIRE OR #4 PLAIN OR DEFORMED BAR

CLASS A CONCRETE BREAKDOWN

POUR #2 (COLUMNS)	65.2 C.Y.
POUR #3 (CAP)	54.3 C.Y.
TOTAL CLASS A CONCRETE	119.5 C.Y.

DRILLED PIERS:

DRILLED PIER CONCRETE POUR #1	62.9 C.Y.

PROJECT NO. B-5831
SURRY/YADKIN COUNTY
STATION: 32+28.00 -L-

SHEET 2 OF 2

NORTH CAROLINA PROFESSIONAL SEAL 20125 ENGINEER MARK W. C. GUGHECK, JR.
Signature: Mark W. C. Gugheck, Jr.
SFBCCJP3442E4B...
9/23/2025

DOCUMENT NOT CONSIDERED FINAL UNLESS ALL SIGNATURES COMPLETED
TGS ENGINEERS
706 HILLSBOROUGH STREET
SUITE 200
RALEIGH, NC 27603
PH (919) 773-8887
CORP. LICENSE NO.: C-0275

STATE OF NORTH CAROLINA
DEPARTMENT OF TRANSPORTATION
RALEIGH

SUBSTRUCTURE
BENT 2

REVISIONS						
NO.	BY:	DATE:	NO.	BY:	DATE:	
1			3			
2			4			

SHEET NO. S-46
TOTAL SHEETS 61

DRAWN BY :	STM	DATE :	07/24
CHECKED BY :	MGC	DATE :	07/24
DESIGN ENGINEER OF RECORD:	STM	DATE :	12/24

12/18/2024
g:\workdir\ncdot-pw.bentley.com_ncdot-pw-01\zachary smith\d0166590\B-5831-SMU-B201-850006.dgn
ZSmith

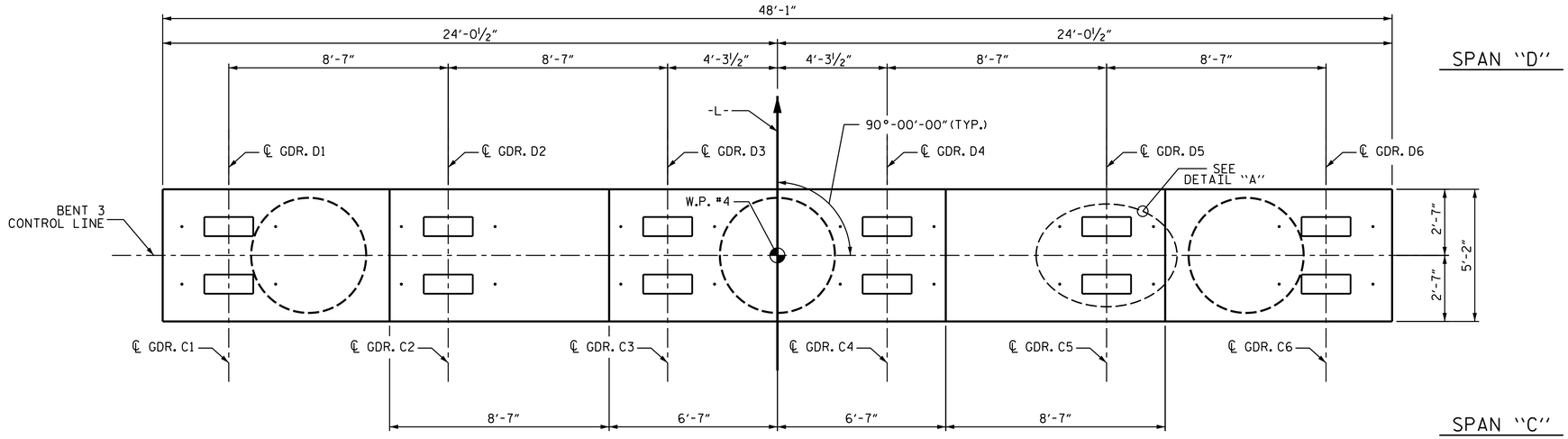

NOTES

STIRRUPS IN CAP MAY BE SHIFTED AS NECESSARY TO CLEAR ANCHOR BOLTS.

HOOKS ON "V" BARS MAY BE TURNED AS NECESSARY FOR PLACING REINFORCING STEEL.

FOR DRILLED PIERS, SEE SECTION 411 OF THE STANDARD SPECIFICATIONS.

ALL STEEL IN THE DRILLED PIERS IS INCLUDED IN THE PAY ITEMS FOR "REINFORCING STEEL" AND "SPIRAL COLUMN REINFORCING STEEL."

★ INVERT ALTERNATE STIRRUPS.

DRILLED PIERS SHALL BE TERMINATED ONE FOOT ± ABOVE WATER SURFACE FOR SHAFTS LOCATED IN THE WATER.

THE CONTRACTOR'S ATTENTION IS CALLED TO THE FACT THAT THE LONGITUDINAL REINFORCEMENT FOR DRILLED PIERS IS DETAILED WITH 3 FEET OF EXTRA LENGTH.

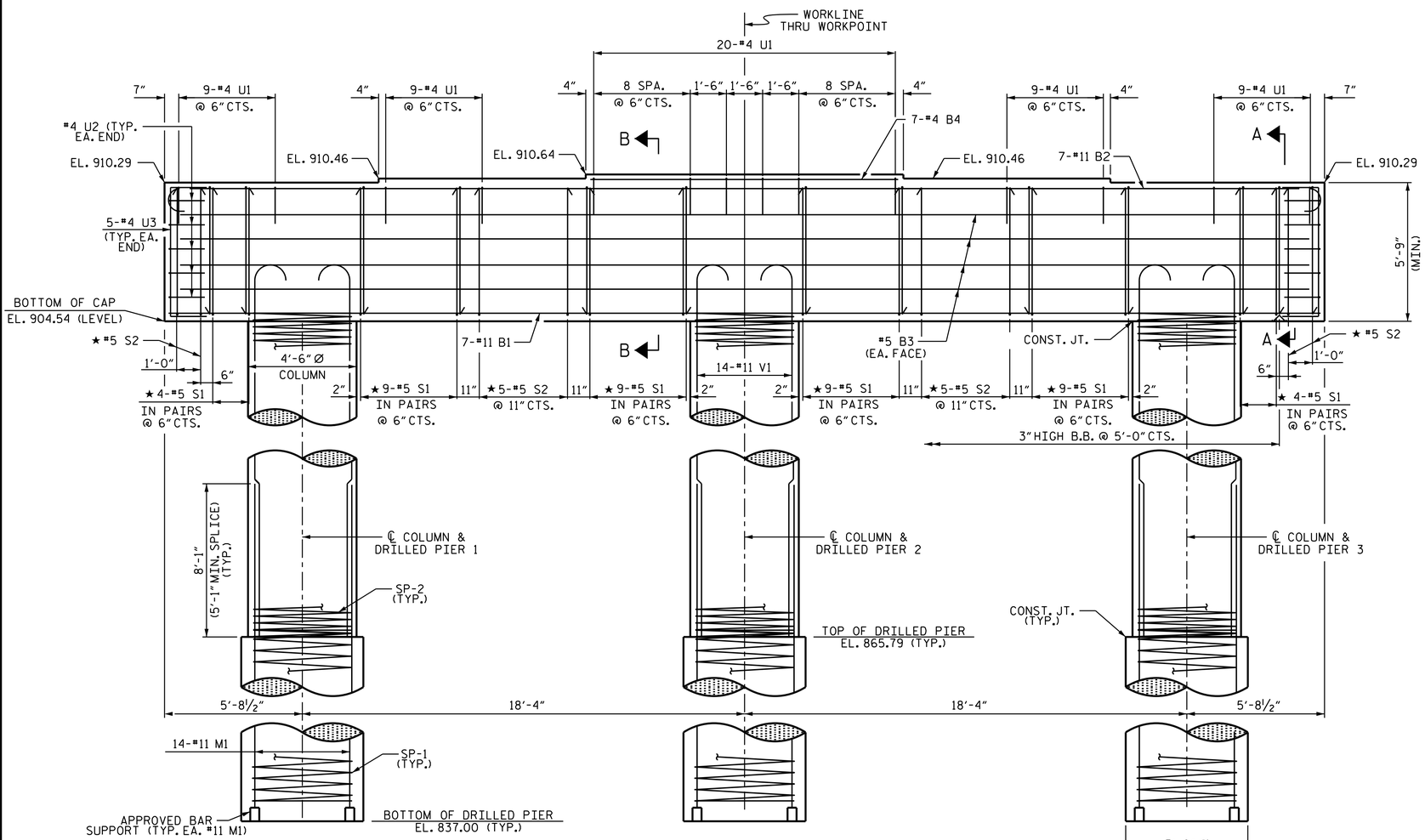

ELEVATION

DIMENSIONS AND REINFORCING STEEL ARE TYPICAL FOR EACH COLUMN & DRILLED PIER EXCEPT AS NOTED.

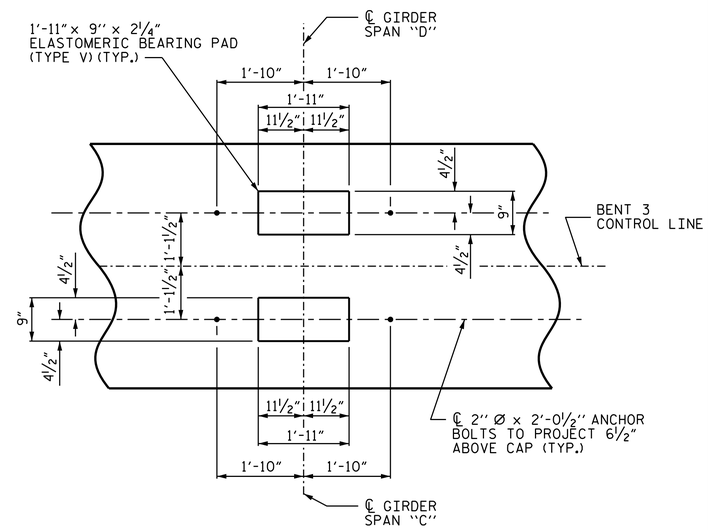

DETAIL "A"

(TYP. EACH GIRDER)

PROJECT NO. B-5831

SURRY/YADKIN COUNTY

STATION: 32+28.00 -L-

SHEET 1 OF 2

NORTH CAROLINA PROFESSIONAL SEAL 20125 ENGINEER MARSHALL G. CHEEK, JR.

Signature: Marshall G. Cheek, Jr.
SFBCC2F3A4DC413...

9/23/2025

DOCUMENT NOT CONSIDERED FINAL UNLESS ALL SIGNATURES COMPLETED

TGS ENGINEERS
706 HILLSBOROUGH STREET
SUITE 200
RALEIGH, NC 27603
PH (919) 773-8887
CORP. LICENSE NO.: C-0275

STATE OF NORTH CAROLINA
DEPARTMENT OF TRANSPORTATION
RALEIGH

SUBSTRUCTURE

BENT 3

REVISIONS						
NO.	BY:	DATE:	NO.	BY:	DATE:	
1			3			
2			4			

SHEET NO. S-47

TOTAL SHEETS 61

DRAWN BY :	STM	DATE :	07/24
CHECKED BY :	MGC	DATE :	07/24
DESIGN ENGINEER OF RECORD:	STM	DATE :	12/24

12/18/2024
c:\workdir\ncdot-pw.bentley.com_ncdot-pw-01\zachary smith\d0166590\B-5831-SMU-B301-850006.dgn
ZSmith

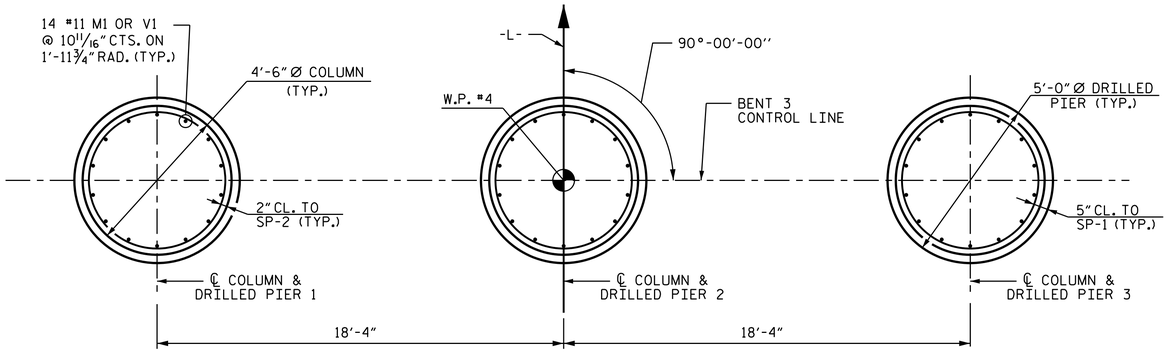

PLAN OF DRILLED PIERS & COLUMNS

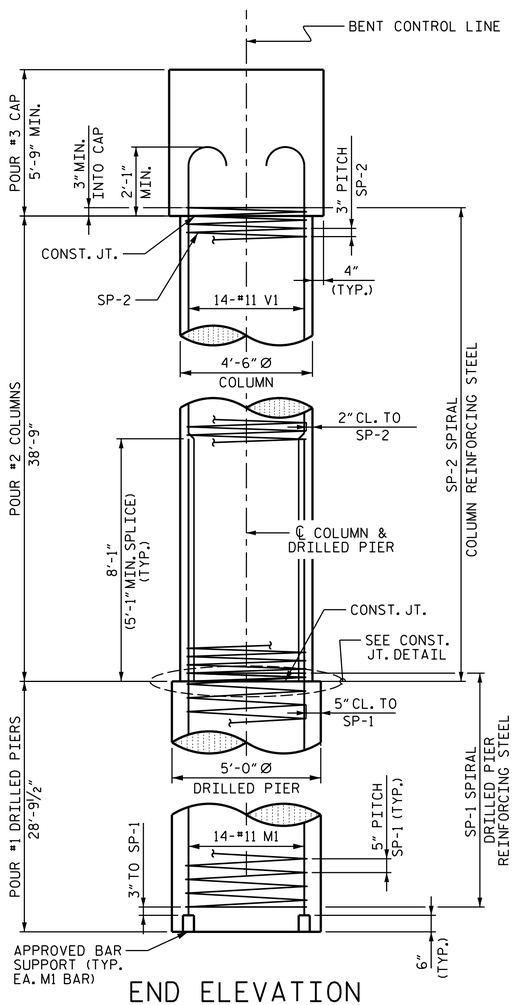

END ELEVATION

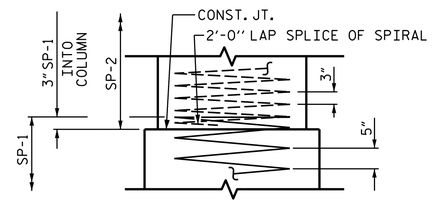

CONSTRUCTION JOINT DETAIL

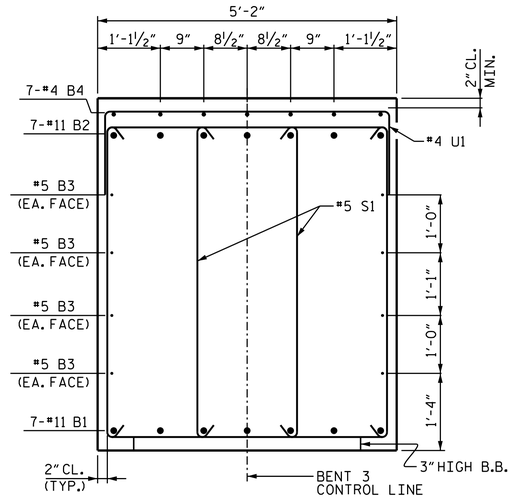

SECTION B-B

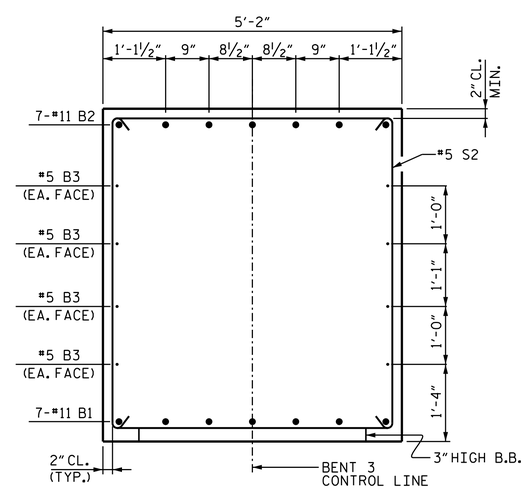

SECTION A-A

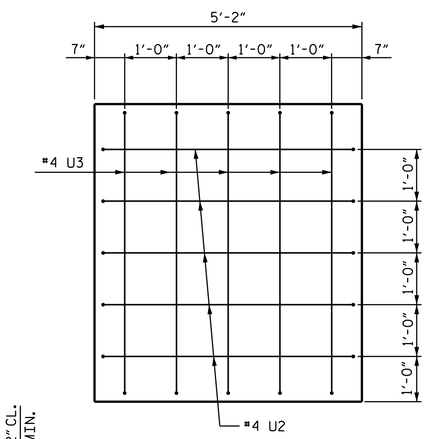

END VIEW

(TYP. EA. END)

BAR TYPES

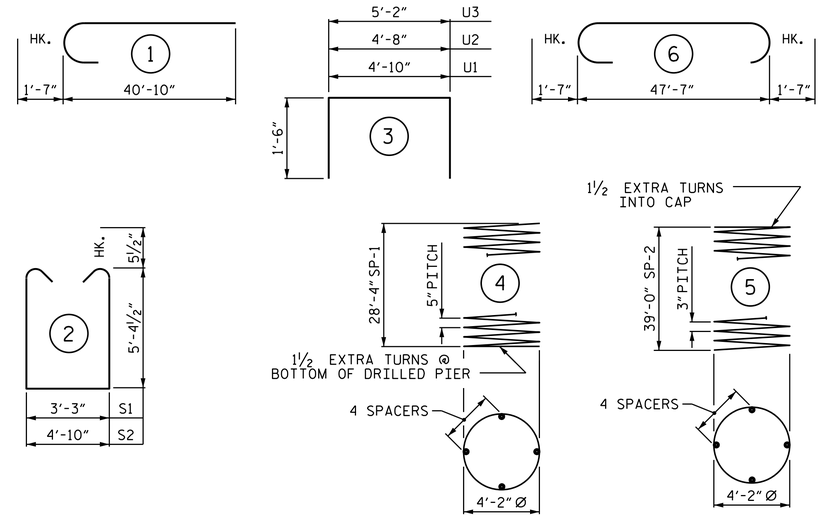

ALL BAR DIMENSIONS ARE OUT TO OUT

BILL OF MATERIAL
FOR BENT 3

BAR	NO.	SIZE	TYPE	LENGTH	WEIGHT
B1	7	#11	STR	47'-9"	1,776
B2	7	#11	6	50'-9"	1,887
B3	8	#5	STR	47'-9"	398
B4	7	#4	STR	12'-9"	60
M1	42	#11	STR	36'-5"	8,126
S1	88	#5	2	14'-11"	1,369
S2	14	#5	2	16'-6"	241
U1	56	#4	3	7'-10"	293
U2	10	#4	3	7'-8"	51
U3	10	#4	3	8'-2"	55
V1	42	#11	1	42'-5"	9,465
REINFORCING STEEL					23,721 LBS.

BAR	NO.	SIZE	TYPE	LENGTH	WEIGHT
SP-1	3	*	4	905'-4"	2,833
SP-2	3	**	5	2,047'-11"	4,104
SPIRAL COLUMN REINFORCING STEEL					6,937 LBS.

* THE SP-1 SPIRAL REINFORCING STEEL SHALL BE W31 OR D-31 COLD DRAWN WIRE OR #5 PLAIN OR DEFORMED BAR

** THE SP-2 SPIRAL REINFORCING STEEL SHALL BE W20 OR D-20 COLD DRAWN WIRE OR #4 PLAIN OR DEFORMED BAR

CLASS A CONCRETE BREAKDOWN

POUR #2 (COLUMNS)	68.5 C.Y.
POUR #3 (CAP)	54.3 C.Y.
TOTAL CLASS A CONCRETE	122.8 C.Y.

DRILLED PIERS:

DRILLED PIER CONCRETE	
POUR #1	62.8 C.Y.

PROJECT NO. B-5831
SURRY/YADKIN COUNTY
STATION: 32+28.00 -L-

SHEET 2 OF 2

NORTH CAROLINA PROFESSIONAL SEAL 20125 ENGINEER
Marshall G. Chick, Jr.
SFBCC2F3A4DC455...
9/23/2025

DOCUMENT NOT CONSIDERED FINAL UNLESS ALL SIGNATURES COMPLETED

TGS ENGINEERS
706 HILLSBOROUGH STREET
SUITE 200
RALEIGH, NC 27603
PH (919) 773-8887
CORP. LICENSE NO.: C-0275

STATE OF NORTH CAROLINA
DEPARTMENT OF TRANSPORTATION
RALEIGH

SUBSTRUCTURE
BENT 3

REVISIONS						
NO.	BY:	DATE:	NO.	BY:	DATE:	
1			3			
2			4			

SHEET NO. S-48
TOTAL SHEETS 61

DRAWN BY :	STM	DATE :	07/24
CHECKED BY :	MGC	DATE :	07/24
DESIGN ENGINEER OF RECORD:	STM	DATE :	12/24

12/18/2024
g:\workdir\ncdot-pw.bentley.com_ncdot-pw-01\zachary smith\d0166590\B-5831-SMU-B301-850006.dgn
ZSmith

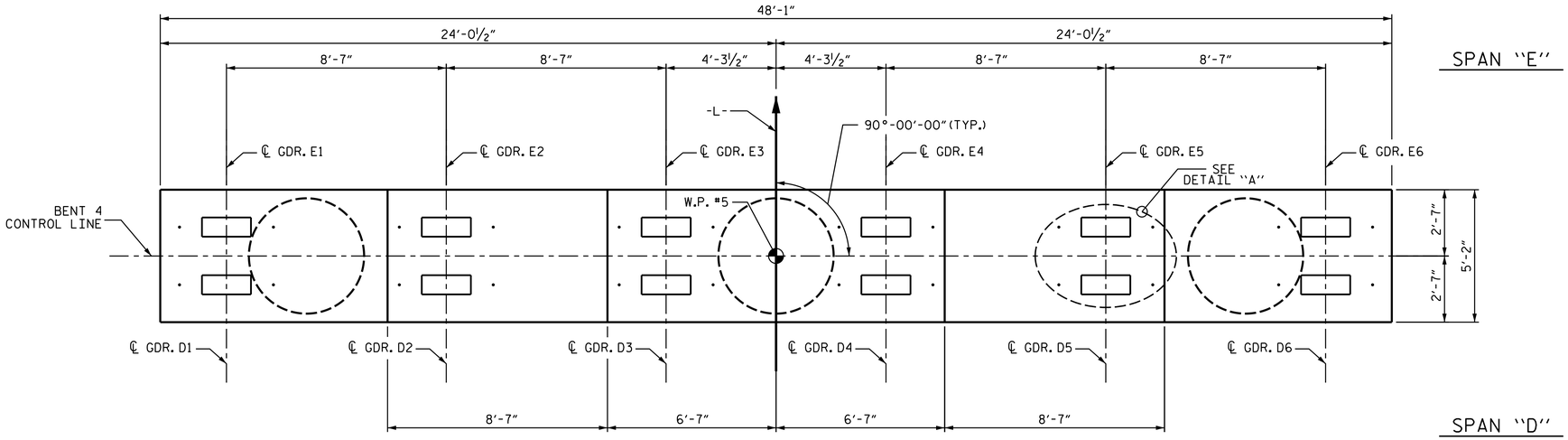

NOTES

STIRRUPS IN CAP MAY BE SHIFTED AS NECESSARY TO CLEAR ANCHOR BOLTS.

HOOKS ON "V" BARS MAY BE TURNED AS NECESSARY FOR PLACING REINFORCING STEEL.

FOR DRILLED PIERS, SEE SECTION 411 OF THE STANDARD SPECIFICATIONS.

ALL STEEL IN THE DRILLED PIERS IS INCLUDED IN THE PAY ITEMS FOR "REINFORCING STEEL" AND "SPIRAL COLUMN REINFORCING STEEL."

★ INVERT ALTERNATE STIRRUPS.

THE LOCATION OF THE CONSTRUCTION JOINT IN THE DRILLED PIERS IS BASED ON AN APPROXIMATE GROUND LINE ELEVATION. IF THE CONSTRUCTION JOINT IS ABOVE THE ACTUAL GROUND LINE ELEVATION, THE CONTRACTOR SHALL PLACE THE CONSTRUCTION JOINT 1 FOOT BELOW THE GROUND LINE.

THE CONTRACTOR'S ATTENTION IS CALLED TO THE FACT THAT THE LONGITUDINAL REINFORCEMENT FOR DRILLED PIERS IS DETAILED WITH 3 FEET OF EXTRA LENGTH.

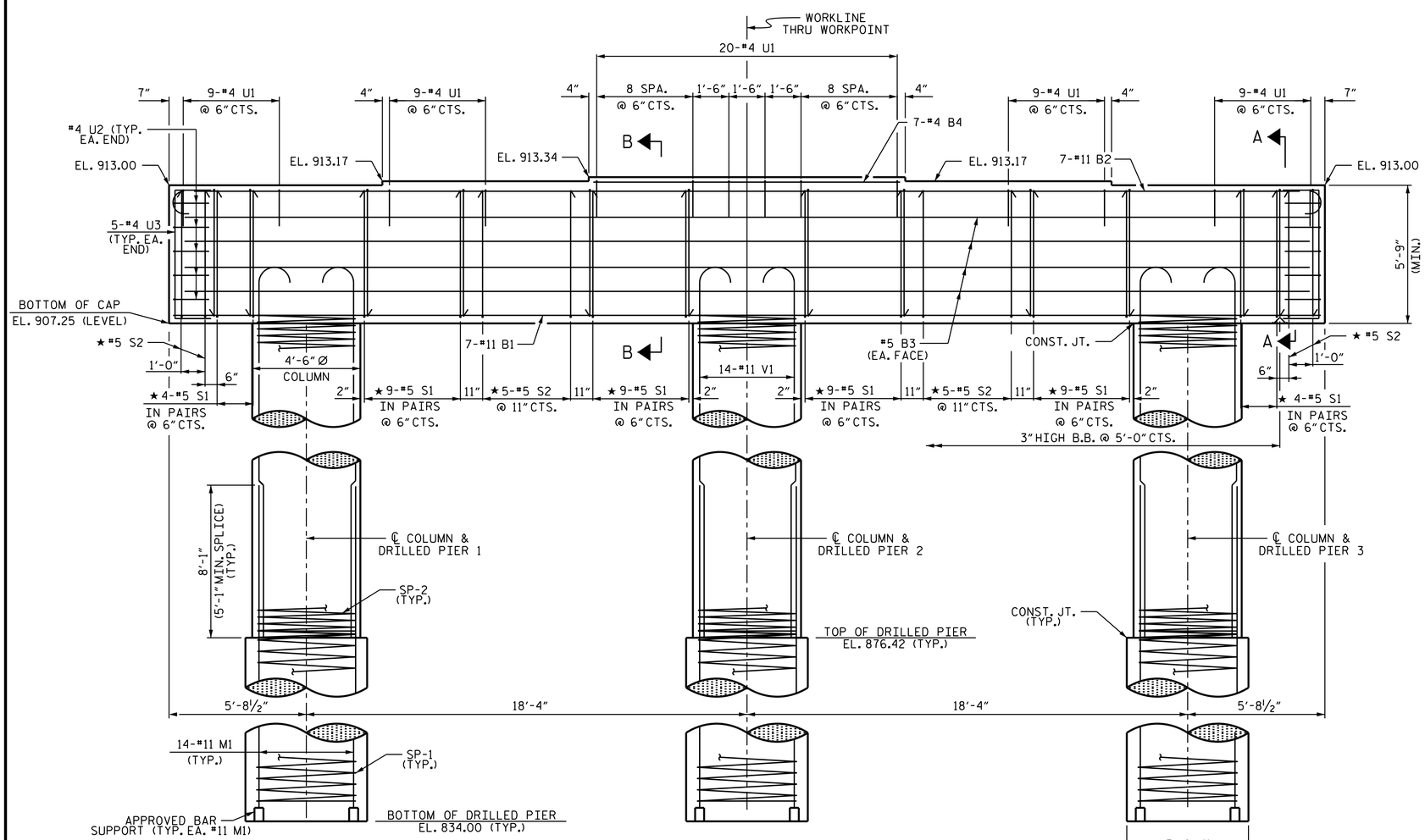

ELEVATION

DIMENSIONS AND REINFORCING STEEL ARE TYPICAL FOR EACH COLUMN & DRILLED PIER EXCEPT AS NOTED.

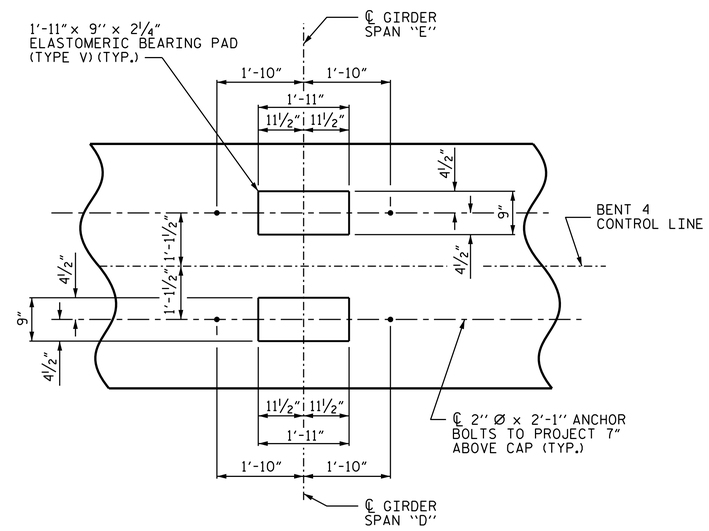

DETAIL "A"

(TYP. EACH GIRDER)

PROJECT NO. B-5831

SURRY/YADKIN COUNTY

STATION: 32+28.00 -L-

SHEET 1 OF 2

NORTH CAROLINA PROFESSIONAL SEAL 20125 ENGINEER MARSHALL G. CHEEK, JR.

5FBCC2F3A4DC413...

9/23/2025

DOCUMENT NOT CONSIDERED FINAL UNLESS ALL SIGNATURES COMPLETED

TGS ENGINEERS
706 HILLSBOROUGH STREET
SUITE 200
RALEIGH, NC 27603
PH (919) 773-8887
CORP. LICENSE NO.: C-0275

STATE OF NORTH CAROLINA
DEPARTMENT OF TRANSPORTATION
RALEIGH

SUBSTRUCTURE

BENT 4

REVISIONS						
NO.	BY:	DATE:	NO.	BY:	DATE:	
1			3			
2			4			

SHEET NO. S-49

TOTAL SHEETS 61

DRAWN BY :	STM	DATE :	07/24
CHECKED BY :	MGC	DATE :	07/24
DESIGN ENGINEER OF RECORD:	STM	DATE :	12/24

12/18/2024
c:\workdir\ncdot-pw.bentley.com_ncdot-pw-01\zachary smith\d0166590\B-5831-SMU-B401-850006.dgn
ZSmith

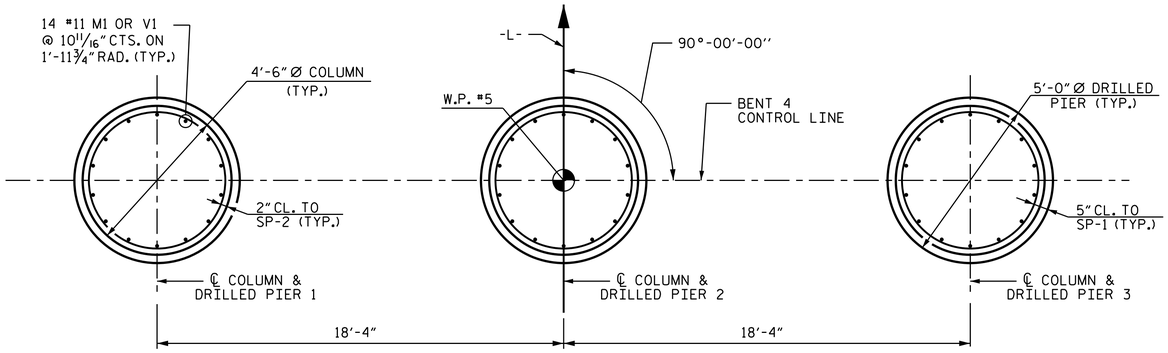

PLAN OF DRILLED PIERS & COLUMNS

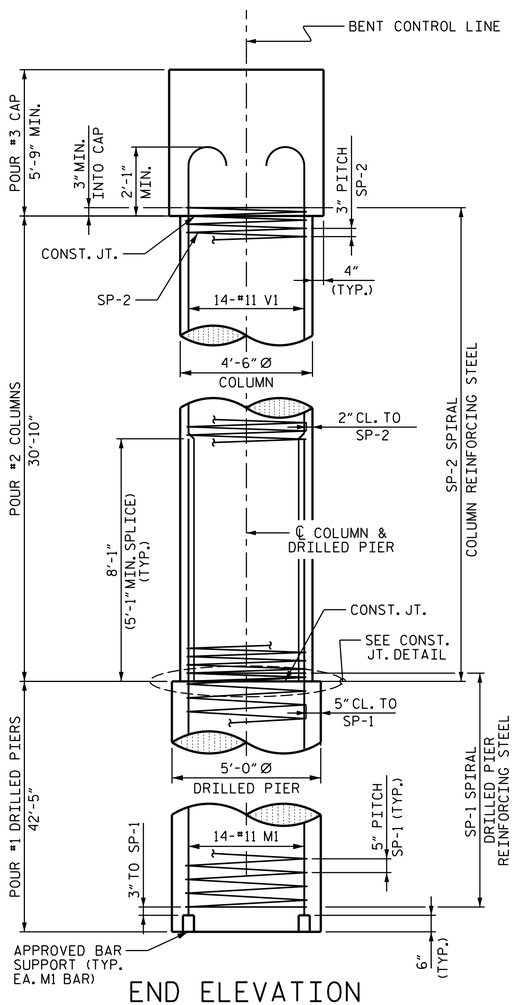

END ELEVATION

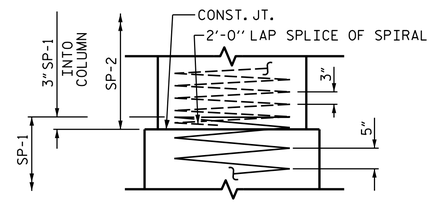

CONSTRUCTION JOINT DETAIL

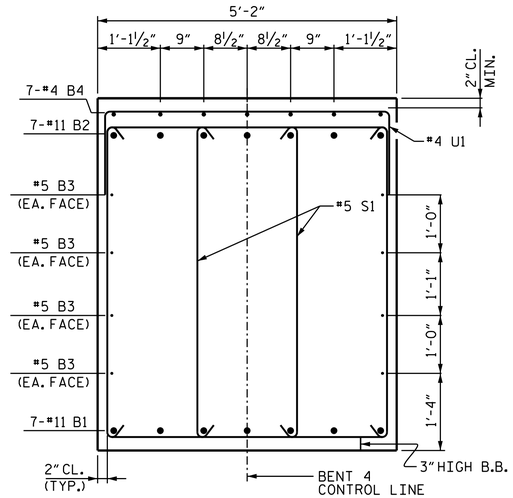

SECTION B-B

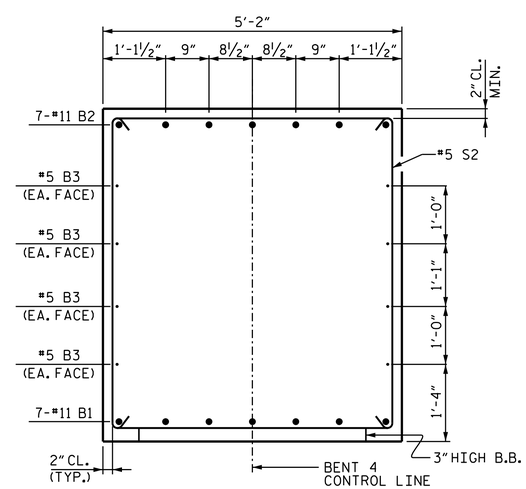

SECTION A-A

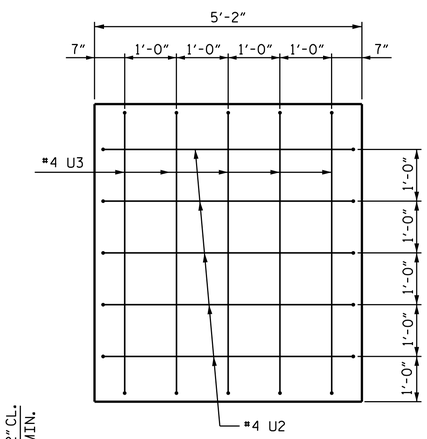

END VIEW

(TYP. EA. END)

BAR TYPES

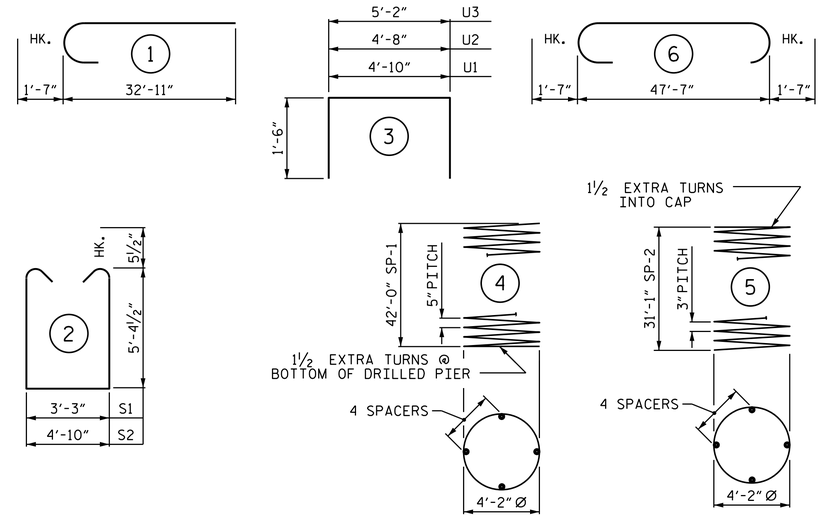

ALL BAR DIMENSIONS ARE OUT TO OUT

BILL OF MATERIAL
FOR BENT 4

BAR	NO.	SIZE	TYPE	LENGTH	WEIGHT
B1	7	#11	STR	47'-9"	1,776
B2	7	#11	6	50'-9"	1,887
B3	8	#5	STR	47'-9"	398
B4	7	#4	STR	12'-9"	60
M1	42	#11	STR	50'-1"	11,176
S1	88	#5	2	14'-11"	1,369
S2	14	#5	2	16'-6"	241
U1	56	#4	3	7'-10"	293
U2	10	#4	3	7'-8"	51
U3	10	#4	3	8'-2"	55
V1	42	#11	1	34'-6"	7,699
REINFORCING STEEL					25,005 LBS.

BAR	NO.	SIZE	TYPE	LENGTH	WEIGHT
SP-1	3	*	4	1,332'-2"	4,168
SP-2	3	**	5	1,633'-2"	3,273
SPIRAL COLUMN REINFORCING STEEL					7,441 LBS.

* THE SP-1 SPIRAL REINFORCING STEEL SHALL BE W31 OR D-31 COLD DRAWN WIRE OR #5 PLAIN OR DEFORMED BAR

** THE SP-2 SPIRAL REINFORCING STEEL SHALL BE W20 OR D-20 COLD DRAWN WIRE OR #4 PLAIN OR DEFORMED BAR

CLASS A CONCRETE BREAKDOWN

POUR #2 (COLUMNS)	54.5 C.Y.
POUR #3 (CAP)	54.3 C.Y.
TOTAL CLASS A CONCRETE	108.8 C.Y.

DRILLED PIERS:

DRILLED PIER CONCRETE	
POUR #1	92.5 C.Y.

PROJECT NO. B-5831
SURRY/YADKIN COUNTY
STATION: 32+28.00 -L-

SHEET 2 OF 2

NORTH CAROLINA PROFESSIONAL SEAL 20125 ENGINEER
Signature: Marsh Bolling C. Clifton, Jr.
5FBCC2F3A4DC413...
9/23/2025

DOCUMENT NOT CONSIDERED FINAL UNLESS ALL SIGNATURES COMPLETED

TGS ENGINEERS
706 HILLSBOROUGH STREET
SUITE 200
RALEIGH, NC 27603
PH (919) 773-8887
CORP. LICENSE NO.: C-0275

STATE OF NORTH CAROLINA
DEPARTMENT OF TRANSPORTATION
RALEIGH

SUBSTRUCTURE
BENT 4

REVISIONS						SHEET NO.
NO.	BY:	DATE:	NO.	BY:	DATE:	S-50
1			3			TOTAL SHEETS
2			4			61

DRAWN BY :	STM	DATE :	07/24
CHECKED BY :	MGC	DATE :	07/24
DESIGN ENGINEER OF RECORD:	STM	DATE :	12/24

12/18/2024
g:\workdir\ncdot-pw.bentley.com_ncdot-pw-01\zachary smith\d0166590\B-5831-SMU-B401-850006.dgn
ZSmith

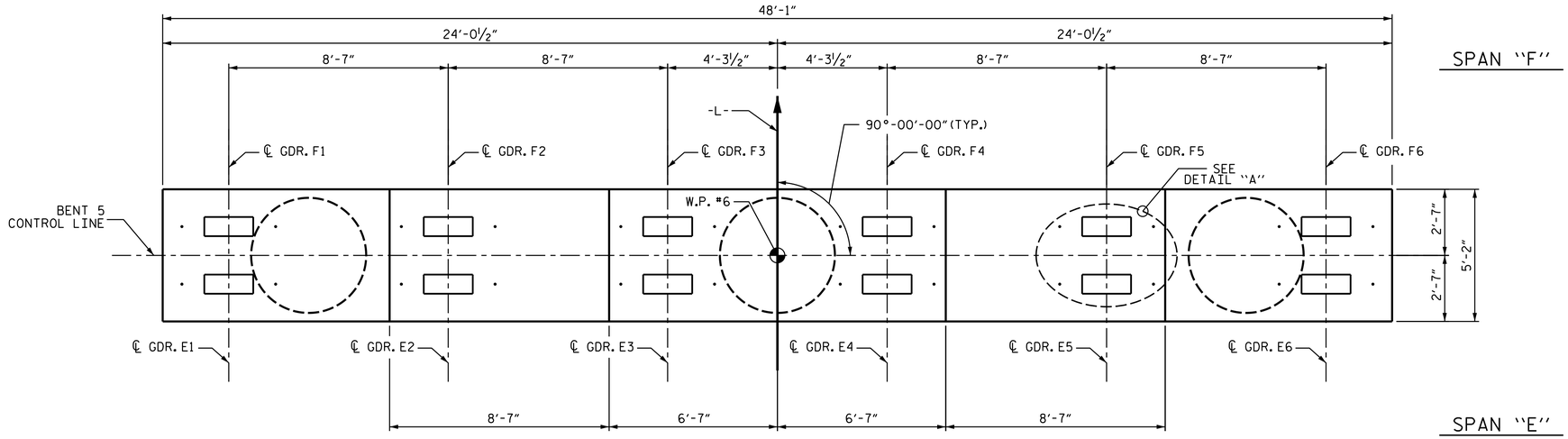

NOTES

STIRRUPS IN CAP MAY BE SHIFTED AS NECESSARY TO CLEAR ANCHOR BOLTS.

HOOKS ON "V" BARS MAY BE TURNED AS NECESSARY FOR PLACING REINFORCING STEEL.

FOR DRILLED PIERS, SEE SECTION 411 OF THE STANDARD SPECIFICATIONS.

ALL STEEL IN THE DRILLED PIERS IS INCLUDED IN THE PAY ITEMS FOR "REINFORCING STEEL" AND "SPIRAL COLUMN REINFORCING STEEL."

★ INVERT ALTERNATE STIRRUPS.

THE LOCATION OF THE CONSTRUCTION JOINT IN THE DRILLED PIERS IS BASED ON AN APPROXIMATE GROUND LINE ELEVATION. IF THE CONSTRUCTION JOINT IS ABOVE THE ACTUAL GROUND LINE ELEVATION, THE CONTRACTOR SHALL PLACE THE CONSTRUCTION JOINT 1 FOOT BELOW THE GROUND LINE.

THE CONTRACTOR'S ATTENTION IS CALLED TO THE FACT THAT THE LONGITUDINAL REINFORCEMENT FOR DRILLED PIERS IS DETAILED WITH 3 FEET OF EXTRA LENGTH.

THE TOP SURFACE AREAS OF THE BENT CAP SHALL BE CURED IN ACCORDANCE WITH THE STANDARD SPECIFICATIONS EXCEPT THAT THE MEMBRANE CURING COMPOUND SHALL NOT BE USED.

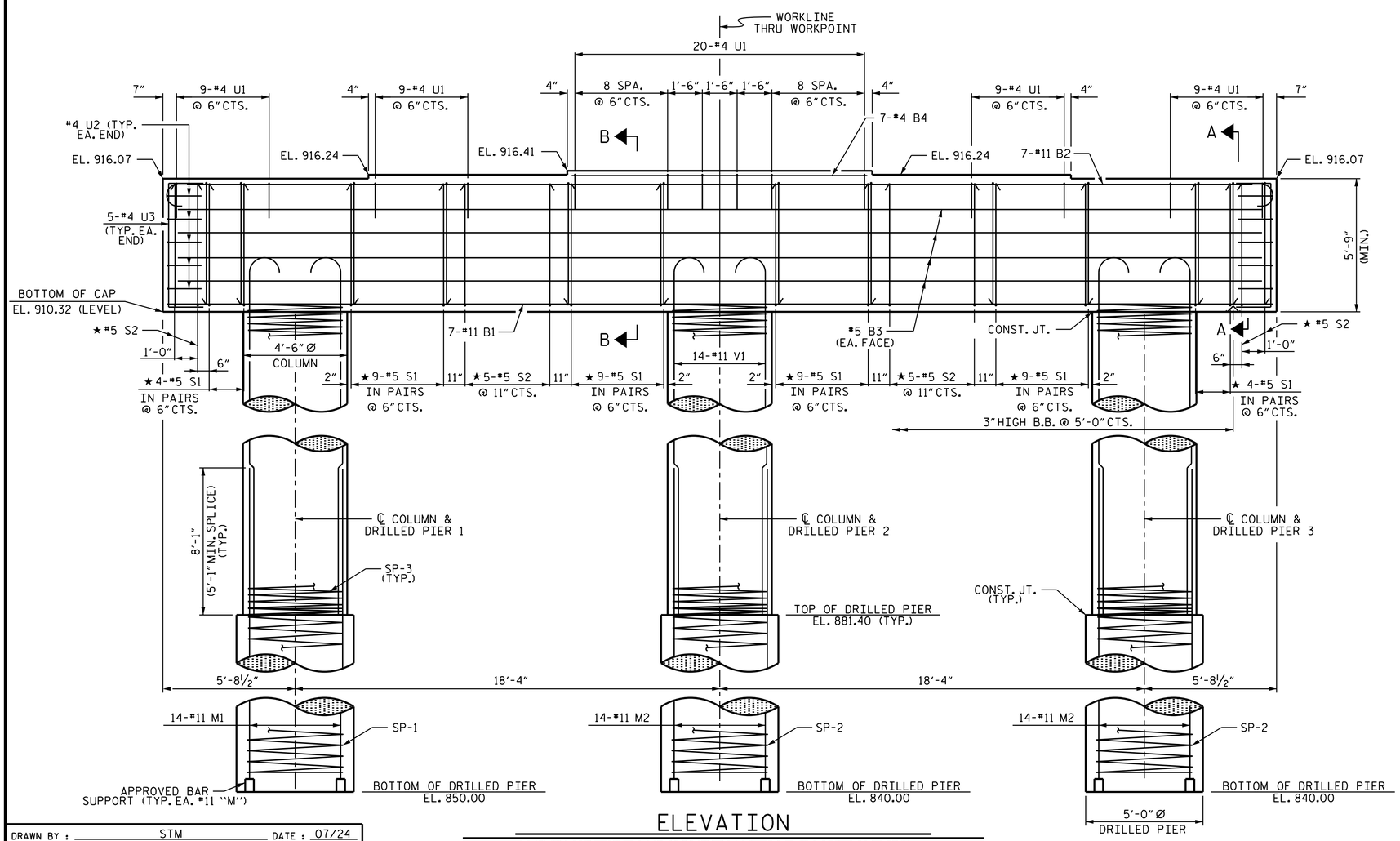

ELEVATION

DIMENSIONS AND REINFORCING STEEL ARE TYPICAL FOR EACH COLUMN & DRILLED PIER EXCEPT AS NOTED.

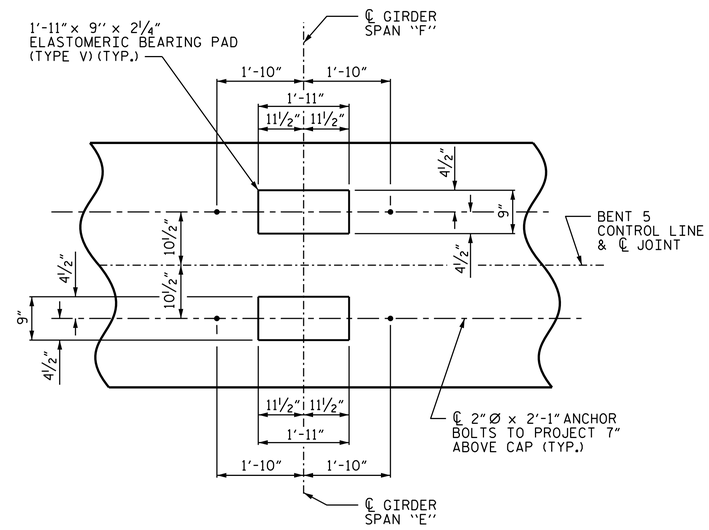

DETAIL "A"

(TYP. EACH GIRDER)

PROJECT NO. B-5831

SURRY/YADKIN COUNTY

STATION: 32+28.00 -L-

SHEET 1 OF 2

NORTH CAROLINA PROFESSIONAL SEAL 20125 ENGINEER MARSHALL G. CHEEK, JR.

Signature: Marshall G. Cheek, Jr.
5FBCC2F3A4DC413...
9/23/2025

DOCUMENT NOT CONSIDERED FINAL UNLESS ALL SIGNATURES COMPLETED

TGS ENGINEERS
706 HILLSBOROUGH STREET
SUITE 200
RALEIGH, NC 27603
PH (919) 773-8887
CORP. LICENSE NO.: C-0275

STATE OF NORTH CAROLINA
DEPARTMENT OF TRANSPORTATION
RALEIGH

SUBSTRUCTURE

BENT 5

REVISIONS						
NO.	BY:	DATE:	NO.	BY:	DATE:	
1			3			
2			4			

SHEET NO. S-51

TOTAL SHEETS 61

DRAWN BY :	STM	DATE :	07/24
CHECKED BY :	MGC	DATE :	07/24
DESIGN ENGINEER OF RECORD:	STM	DATE :	12/24

12/18/2024
c:\workdir\ncdot-pw.bentley.com_ncdot-pw-01\zachary smith\d0166590\B-5831-SMU-B501-850006.dgn
ZSmith

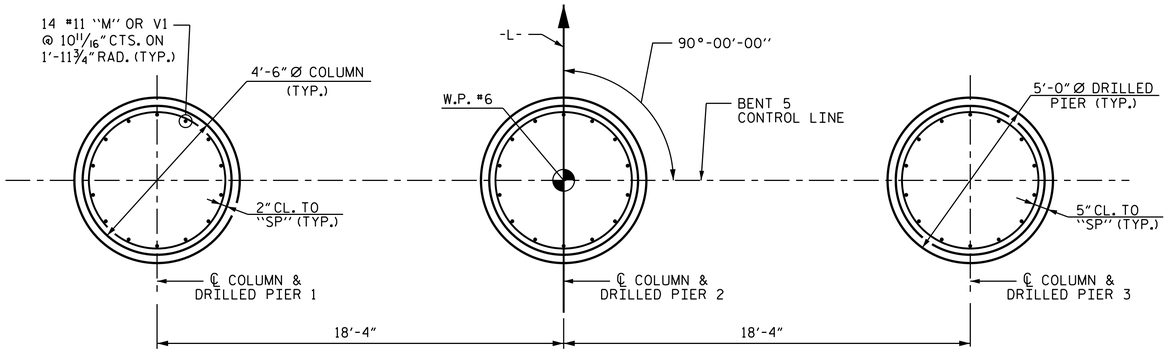

PLAN OF DRILLED PIERS & COLUMNS

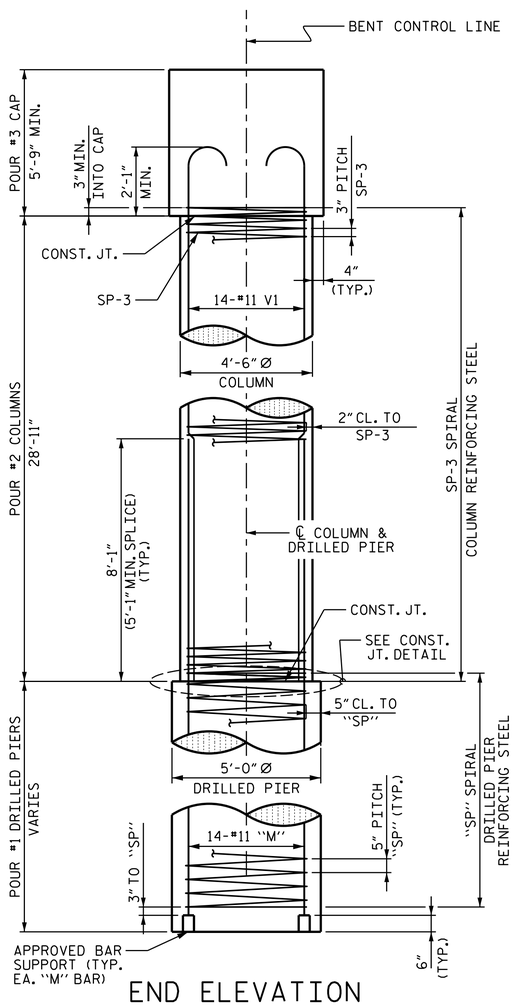

END ELEVATION

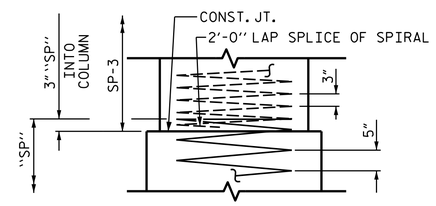

CONSTRUCTION JOINT DETAIL

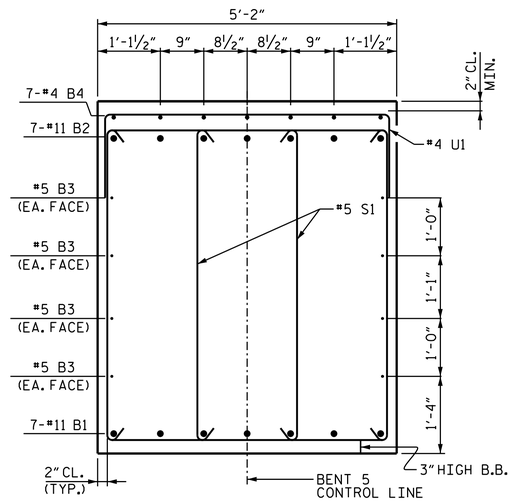

SECTION B-B

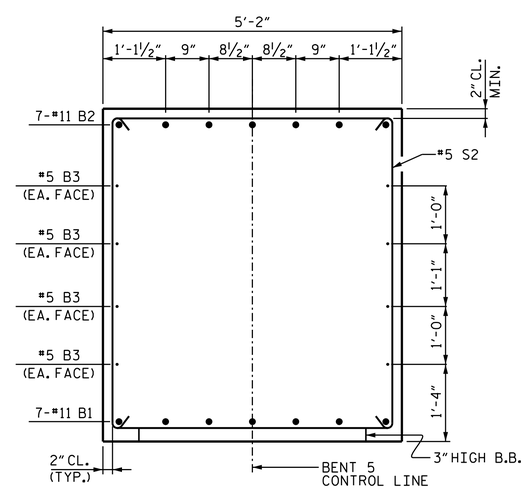

SECTION A-A

BAR TYPES

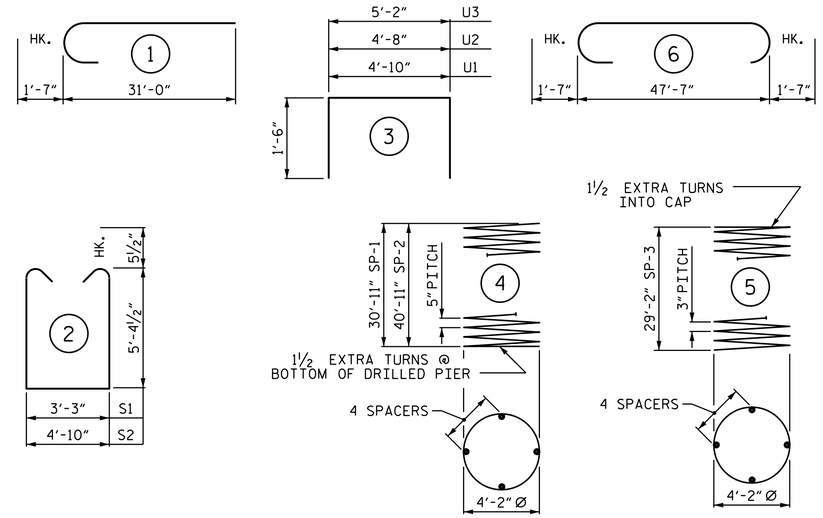

ALL BAR DIMENSIONS ARE OUT TO OUT

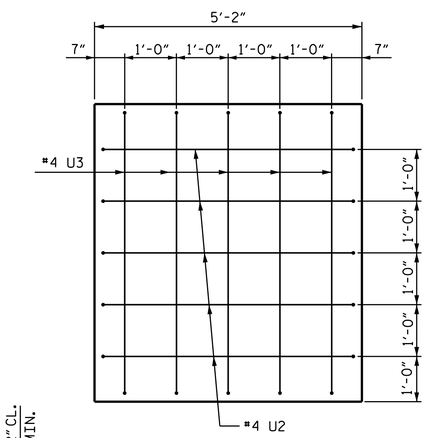

END VIEW

(TYP. EA. END)

BILL OF MATERIAL
FOR BENT 5

BAR	NO.	SIZE	TYPE	LENGTH	WEIGHT
B1	7	#11	STR	47'-9"	1,776
B2	7	#11	6	50'-9"	1,887
B3	8	#5	STR	47'-9"	398
B4	7	#4	STR	12'-9"	60
M1	14	#11	STR	39'-0"	2,901
M2	28	#11	STR	49'-0"	7,289
S1	88	#5	2	14'-11"	1,369
S2	14	#5	2	16'-6"	241
U1	56	#4	3	7'-10"	293
U2	10	#4	3	7'-8"	51
U3	10	#4	3	8'-2"	55
V1	42	#11	1	32'-7"	7,271
REINFORCING STEEL					23,591 LBS.

BAR	NO.	SIZE	TYPE	LENGTH	WEIGHT
SP-1	1	*	4	982'-11"	1,025
SP-2	2	*	4	1,293'-4"	2,698
SP-3	3	**	5	1,542'-6"	3,091
SPIRAL COLUMN REINFORCING STEEL					6,814 LBS.

* THE SP-1 & SP-2 SPIRAL REINFORCING STEEL SHALL BE W31 OR D-31 COLD DRAWN WIRE OR #5 PLAIN OR DEFORMED BAR

** THE SP-3 SPIRAL REINFORCING STEEL SHALL BE W20 OR D-20 COLD DRAWN WIRE OR #4 PLAIN OR DEFORMED BAR

CLASS A CONCRETE BREAKDOWN

POUR #2 (COLUMNS)	51.1 C.Y.
POUR #3 (CAP)	54.3 C.Y.
TOTAL CLASS A CONCRETE	105.4 C.Y.

DRILLED PIERS:

DRILLED PIER CONCRETE	
POUR #1	83.0 C.Y.

PROJECT NO. B-5831
SURRY/YADKIN COUNTY
STATION: 32+28.00 -L-

SHEET 2 OF 2

NORTH CAROLINA PROFESSIONAL SEAL 20125 ENGINEER
MARSHALL G. CHEEK, JR.
5FBCC2F3A4DC413...
9/23/2025

DOCUMENT NOT CONSIDERED FINAL UNLESS ALL SIGNATURES COMPLETED

TGS ENGINEERS
706 HILLSBOROUGH STREET
SUITE 200
RALEIGH, NC 27603
PH (919) 773-8887
CORP. LICENSE NO.: C-0275

STATE OF NORTH CAROLINA
DEPARTMENT OF TRANSPORTATION
RALEIGH

SUBSTRUCTURE
BENT 5

REVISIONS						
NO.	BY:	DATE:	NO.	BY:	DATE:	
1			3			
2			4			

SHEET NO. S-52
TOTAL SHEETS 61

DRAWN BY :	STM	DATE :	07/24
CHECKED BY :	MGC	DATE :	07/24
DESIGN ENGINEER OF RECORD:	STM	DATE :	12/24

12/18/2024
g:\workdir\ncdot-pw.bentley.com_ncdot-pw-01\zachary smith\d0166590\B-5831-SMU-B501-850006.dgn
ZSmith

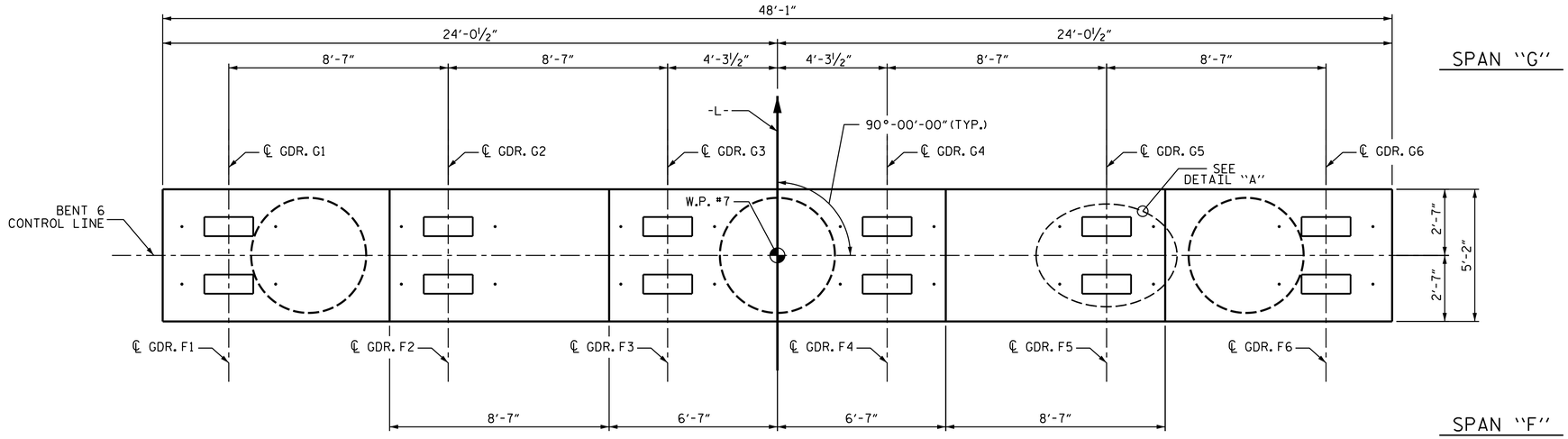

NOTES

STIRRUPS IN CAP MAY BE SHIFTED AS NECESSARY TO CLEAR ANCHOR BOLTS.

HOOKS ON "V" BARS MAY BE TURNED AS NECESSARY FOR PLACING REINFORCING STEEL.

FOR DRILLED PIERS, SEE SECTION 411 OF THE STANDARD SPECIFICATIONS.

ALL STEEL IN THE DRILLED PIERS IS INCLUDED IN THE PAY ITEMS FOR "REINFORCING STEEL" AND "SPIRAL COLUMN REINFORCING STEEL."

★ INVERT ALTERNATE STIRRUPS.

THE LOCATION OF THE CONSTRUCTION JOINT IN THE DRILLED PIERS IS BASED ON AN APPROXIMATE GROUND LINE ELEVATION. IF THE CONSTRUCTION JOINT IS ABOVE THE ACTUAL GROUND LINE ELEVATION, THE CONTRACTOR SHALL PLACE THE CONSTRUCTION JOINT 1 FOOT BELOW THE GROUND LINE.

THE CONTRACTOR'S ATTENTION IS CALLED TO THE FACT THAT THE LONGITUDINAL REINFORCEMENT FOR DRILLED PIERS IS DETAILED WITH 3 FEET OF EXTRA LENGTH.

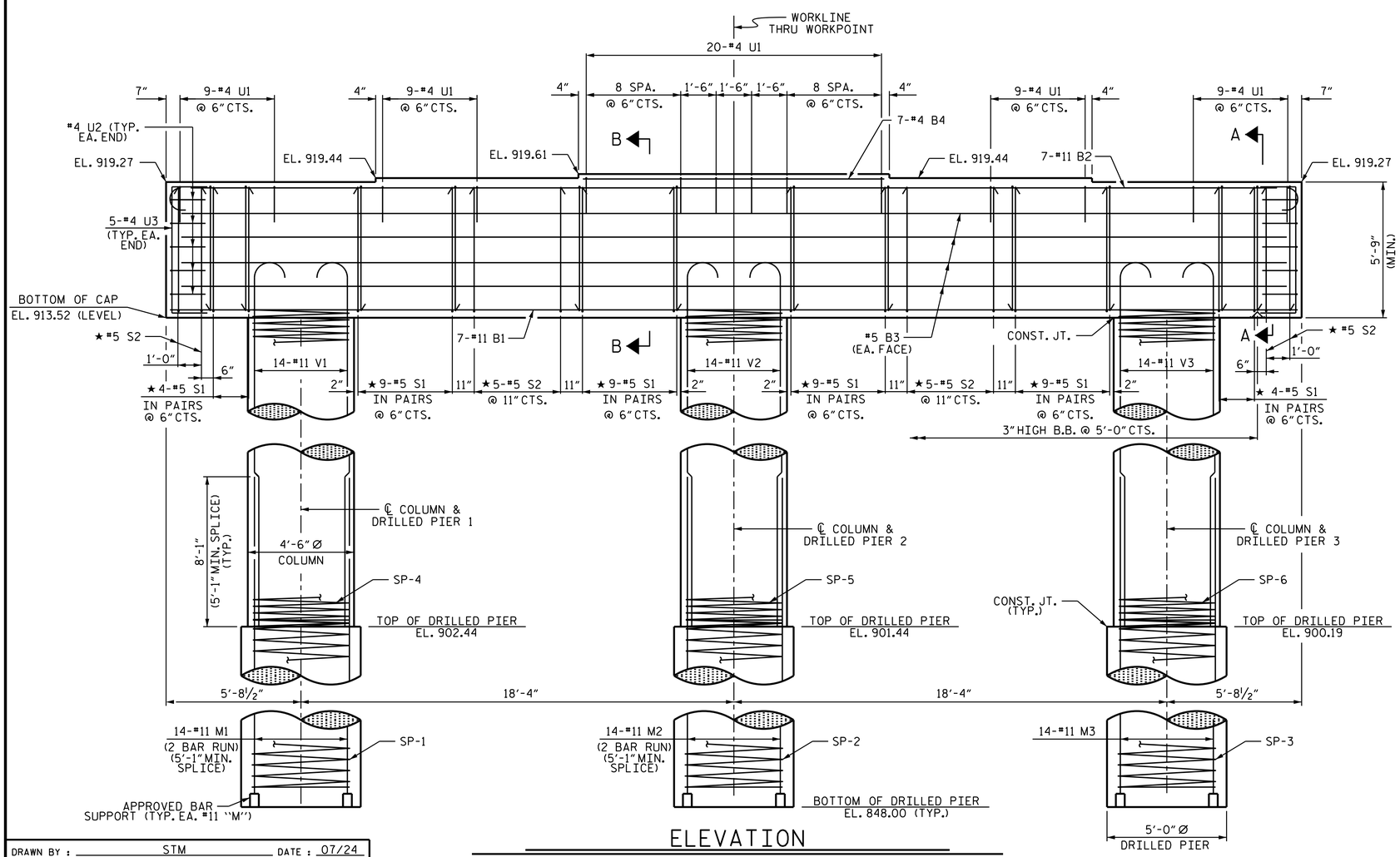

ELEVATION

DIMENSIONS AND REINFORCING STEEL ARE TYPICAL FOR EACH COLUMN & DRILLED PIER EXCEPT AS NOTED.

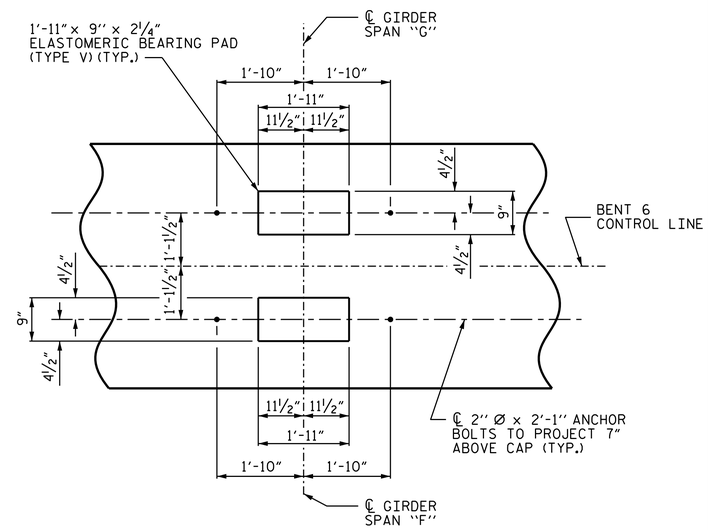

DETAIL "A"

(TYP. EACH GIRDER)

PROJECT NO. B-5831

SURRY/YADKIN COUNTY

STATION: 32+28.00 -L-

SHEET 1 OF 2

NORTH CAROLINA PROFESSIONAL SEAL 20125 ENGINEER MARSHALL G. CHEEK, JR.

Marshall G. Cheek, Jr.

5FBCC2F3A4DC413...

9/23/2025

DOCUMENT NOT CONSIDERED FINAL UNLESS ALL SIGNATURES COMPLETED

TGS ENGINEERS
706 HILLSBOROUGH STREET
SUITE 200
RALEIGH, NC 27603
PH (919) 773-8887
CORP. LICENSE NO.: C-0275

STATE OF NORTH CAROLINA
DEPARTMENT OF TRANSPORTATION
RALEIGH

SUBSTRUCTURE

BENT 6

REVISIONS						
NO.	BY:	DATE:	NO.	BY:	DATE:	
1			3			
2			4			

SHEET NO. S-53

TOTAL SHEETS 61

DRAWN BY :	STM	DATE :	07/24
CHECKED BY :	MGC	DATE :	07/24
DESIGN ENGINEER OF RECORD:	STM	DATE :	12/24

12/18/2024
c:\workdir\ncdot-pw.bentley.com_ncdot-pw-01\zachary smith\d0166590\B-5831-SMU-B601-850006.dgn
ZSmith

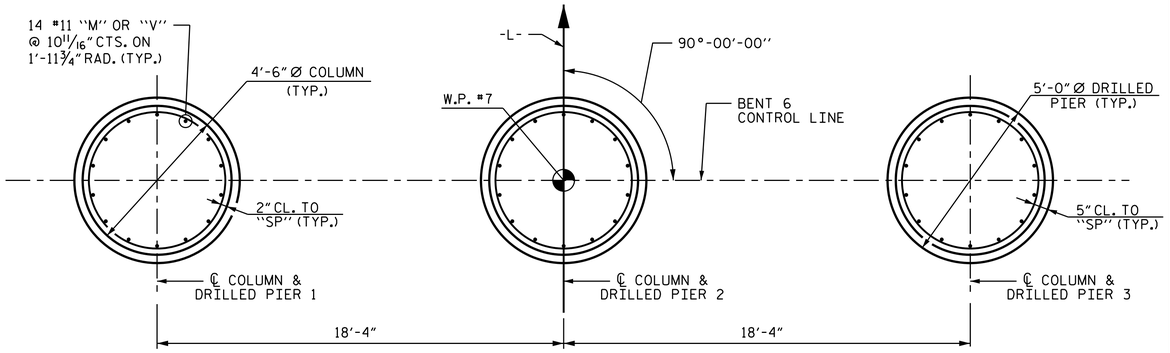

PLAN OF DRILLED PIERS & COLUMNS

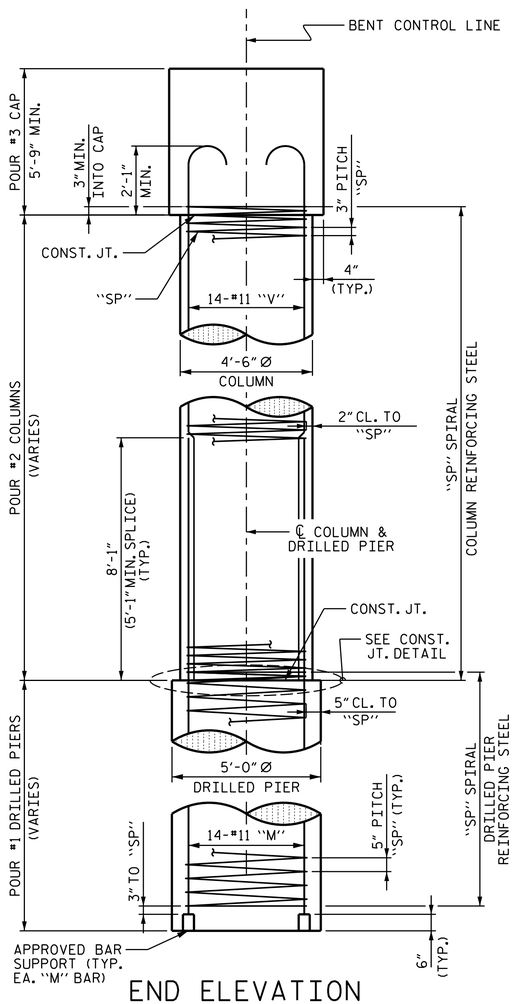

END ELEVATION

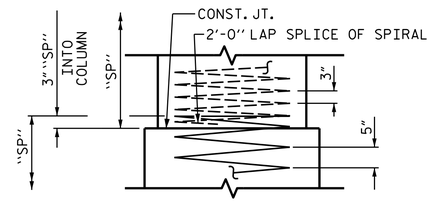

CONSTRUCTION JOINT DETAIL

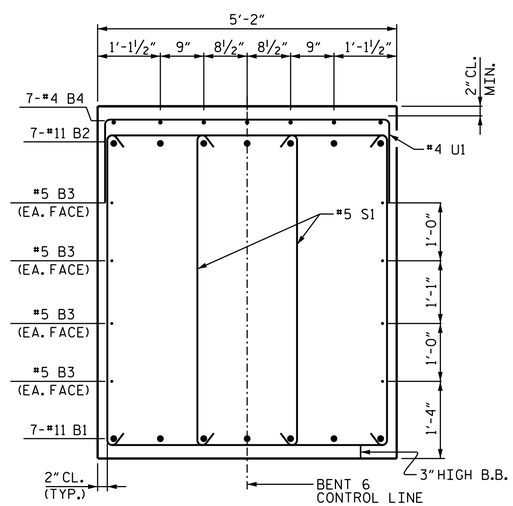

SECTION B-B

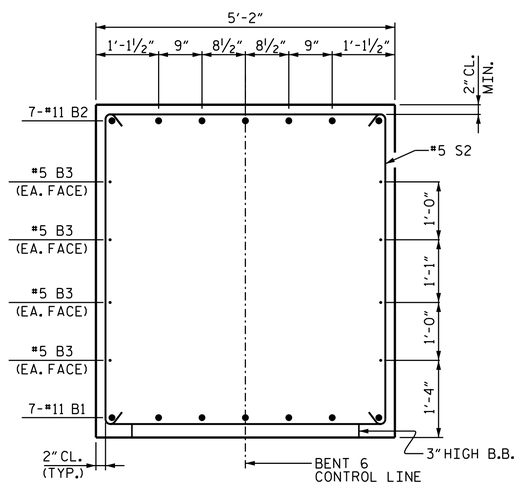

SECTION A-A

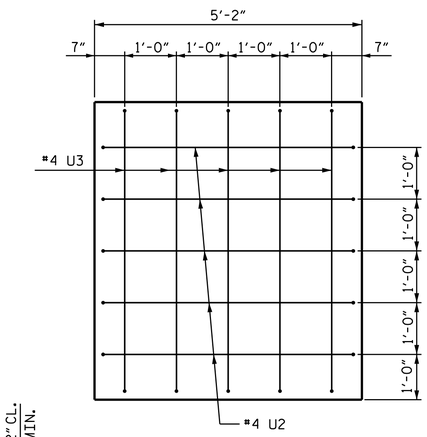

END VIEW

(TYP. EA. END)

BAR TYPES

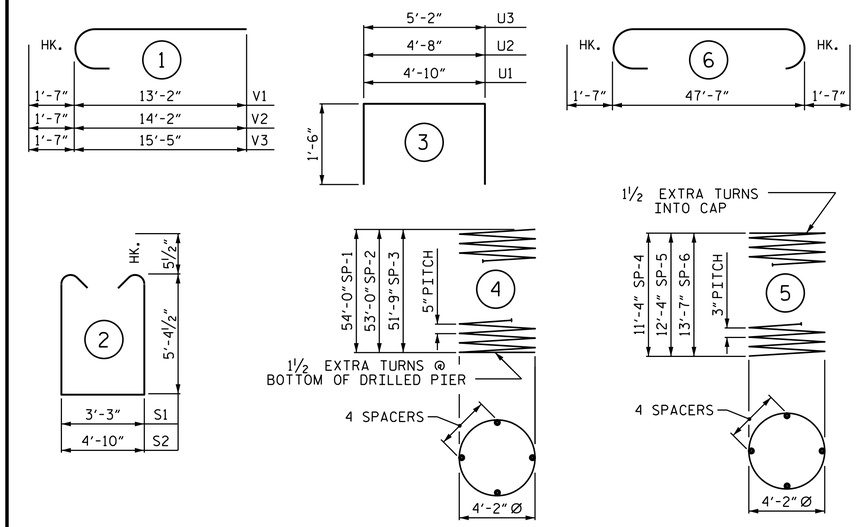

ALL BAR DIMENSIONS ARE OUT TO OUT

BILL OF MATERIAL
FOR BENT 6

BAR	NO.	SIZE	TYPE	LENGTH	WEIGHT
B1	7	#11	STR	47'-9"	1,776
B2	7	#11	6	50'-9"	1,887
B3	8	#5	STR	47'-9"	398
B4	7	#4	STR	12'-9"	60
M1	28	#11	STR	33'-10"	5,033
M2	28	#11	STR	33'-4"	4,959
M3	14	#11	STR	59'-10"	4,451
S1	88	#5	2	14'-11"	1,369
S2	14	#5	2	16'-6"	241
U1	56	#4	3	7'-10"	293
U2	10	#4	3	7'-8"	51
U3	10	#4	3	8'-2"	55
V1	14	#11	1	14'-9"	1,097
V2	14	#11	1	15'-9"	1,172
V3	14	#11	1	17'-0"	1,264
REINFORCING STEEL					24,106 LBS.

BAR	NO.	SIZE	TYPE	LENGTH	WEIGHT
SP-1	1	*	4	1,694'-3"	1,767
SP-2	1	*	4	1,668'-5"	1,740
SP-3	1	*	4	1,629'-7"	1,700
SP-4	1	**	5	609'-3"	407
SP-5	1	**	5	661'-1"	442
SP-6	1	**	5	725'-11"	485
SPIRAL COLUMN REINFORCING STEEL					6,541 LBS.

* THE SP-1, SP-2, SP-3 SPIRAL REINFORCING STEEL SHALL BE W31 OR D-31 COLD DRAWN WIRE OR #5 PLAIN OR DEFORMED BAR

** THE SP-4, SP-5, SP-6 SPIRAL REINFORCING STEEL SHALL BE W20 OR D-20 COLD DRAWN WIRE OR #4 PLAIN OR DEFORMED BAR

CLASS A CONCRETE BREAKDOWN

POUR #2 (COLUMNS)	21.5 C.Y.
POUR #3 (CAP)	54.3 C.Y.
TOTAL CLASS A CONCRETE	75.8 C.Y.

DRILLED PIERS:

DRILLED PIER CONCRETE POUR #1	116.5 C.Y.

PROJECT NO. B-5831
SURRY/YADKIN COUNTY
STATION: 32+28.00 -L-

SHEET 2 OF 2

NORTH CAROLINA PROFESSIONAL SEAL 20125 ENGINEER
Marshall Clark Mitchell, Jr.
5FBCC2F3A4D4A1B...
9/23/2025

DOCUMENT NOT CONSIDERED FINAL UNLESS ALL SIGNATURES COMPLETED

TGS ENGINEERS
706 HILLSBOROUGH STREET
SUITE 200
RALEIGH, NC 27603
PH (919) 773-8887
CORP. LICENSE NO.: C-0275

STATE OF NORTH CAROLINA
DEPARTMENT OF TRANSPORTATION
RALEIGH

SUBSTRUCTURE
BENT 6

REVISIONS							
NO.	BY:	DATE:	NO.	BY:	DATE:	SHEET NO.	S-54
1			3			TOTAL SHEETS	61
2			4				

DRAWN BY :	STM	DATE :	07/24
CHECKED BY :	MGC	DATE :	07/24
DESIGN ENGINEER OF RECORD:	STM	DATE :	12/24

12/18/2024
c:\workdir\ncdot-pw.bentley.com_ncdot-pw-01\zachary smith\d0166590\B-5831-SMU-B601-850006.dgn
ZSmith

NOTES :

STIRRUPS IN CAP MAY BE SHIFTED AS NECESSARY TO CLEAR ANCHOR BOLTS.

FOR PILE SPLICE DETAILS, SEE SHEET 4 OF 4.

FOR WING DETAILS, SEE SHEET 2 OF 4.

BACKWALL SHALL BE PLACED BEFORE APPLYING THE EPOXY PROTECTIVE COATING.

THE TOP SURFACE AREAS OF THE END BENT CAP SHALL BE CURED IN ACCORDANCE WITH THE STANDARD SPECIFICATIONS EXCEPT THAT THE MEMBRANE CURING COMPOUND METHOD SHALL NOT BE USED.

THE TOP SURFACE OF THE END BENT CAP EXCEPT THE BRIDGE SEAT BUILDUPS SHALL BE SLOPED TRANSVERSELY FROM THE FILL FACE TO THE BACK FACE AT THE RATE OF 2%.

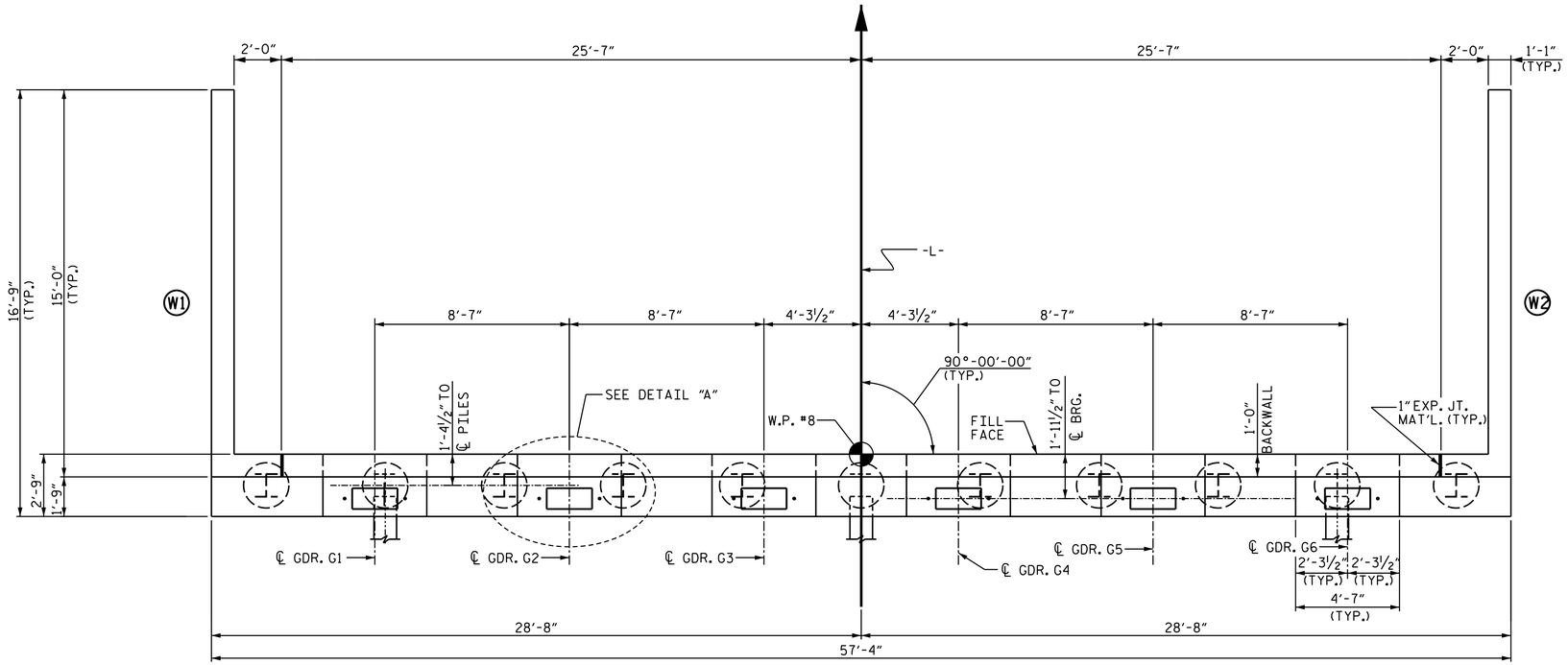

PLAN

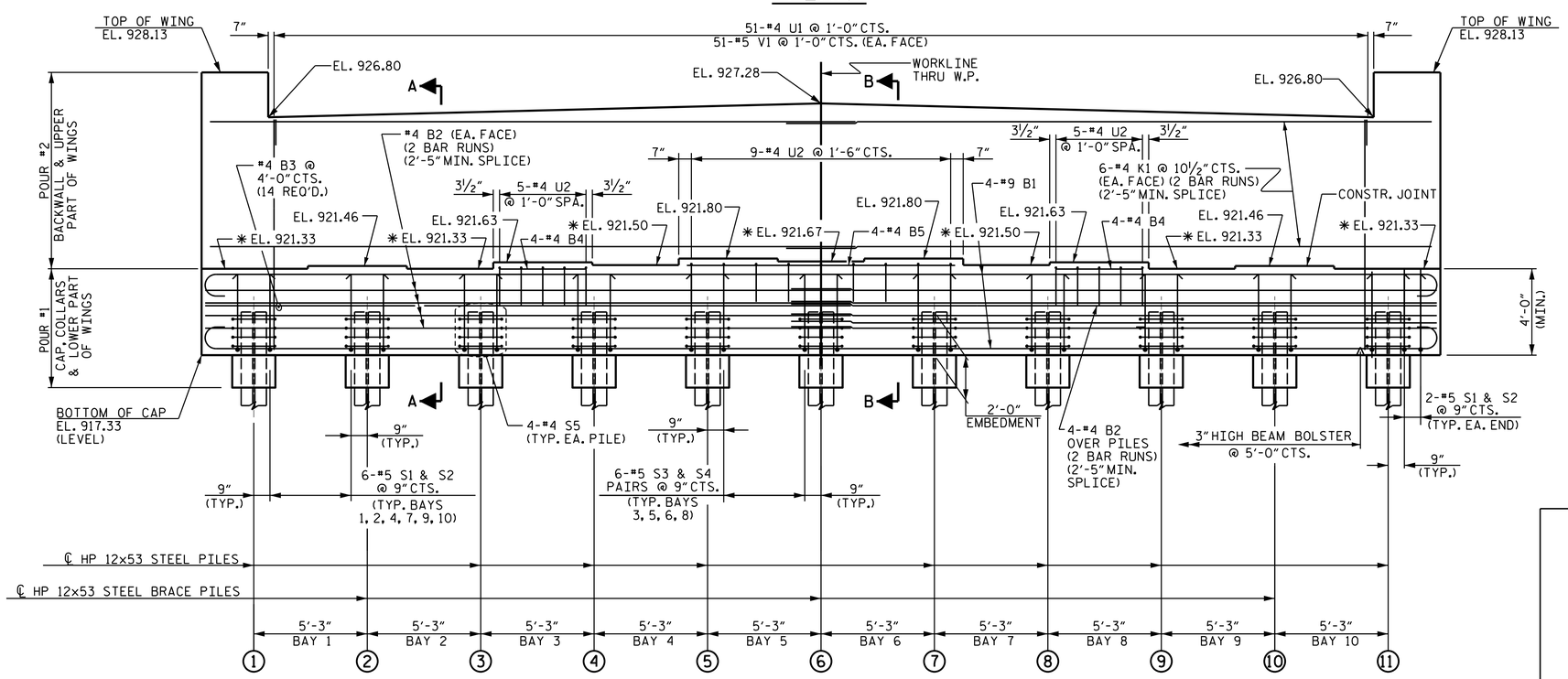

ELEVATION

(WINGS NOT SHOWN FOR CLARITY)

✱ FOR LOCATION OF ELEVATION BETWEEN BRIDGE SEAT BUILD-UPS, SEE SECTIONS A-A & B-B, SHEET 4 OF 4.

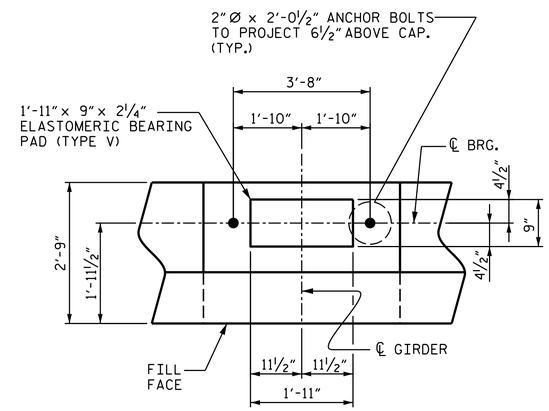

DETAIL "A"

TYPICAL EACH GIRDER

PROJECT NO. B-5831

SURRY/YADKIN COUNTY

STATION: 32+28.00 -L-

SHEET 1 OF 4

DRAWN BY :	ZCS	DATE :	5/24
CHECKED BY :	MGC	DATE :	5/24
DESIGN ENGINEER OF RECORD :	ZCS	DATE :	5/24

NORTH CAROLINA PROFESSIONAL SEAL 20125 ENGINEER

Matthew G. Clancy Jr.

SFBCC2F3A0A3A4...

9/23/2025

DOCUMENT NOT CONSIDERED FINAL UNLESS ALL SIGNATURES COMPLETED

TGS ENGINEERS
706 HILLSBOROUGH STREET
SUITE 200
RALEIGH, NC 27603
PH (919) 773-8887
CORP. LICENSE NO.: C-0275

STATE OF NORTH CAROLINA
DEPARTMENT OF TRANSPORTATION
RALEIGH

SUBSTRUCTURE

END BENT 2

REVISIONS									SHEET NO.
NO.	BY:	DATE:	NO.	BY:	DATE:				S-55
1			3						TOTAL SHEETS
2			4						61

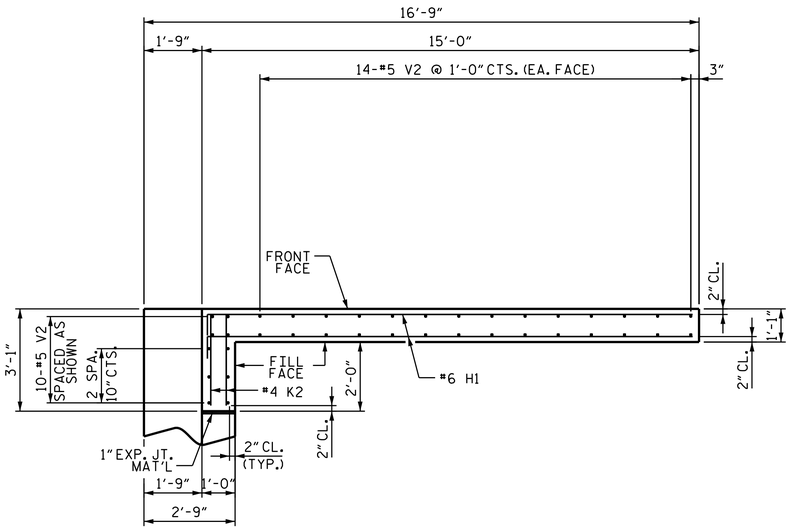

PLAN OF WING (W1)

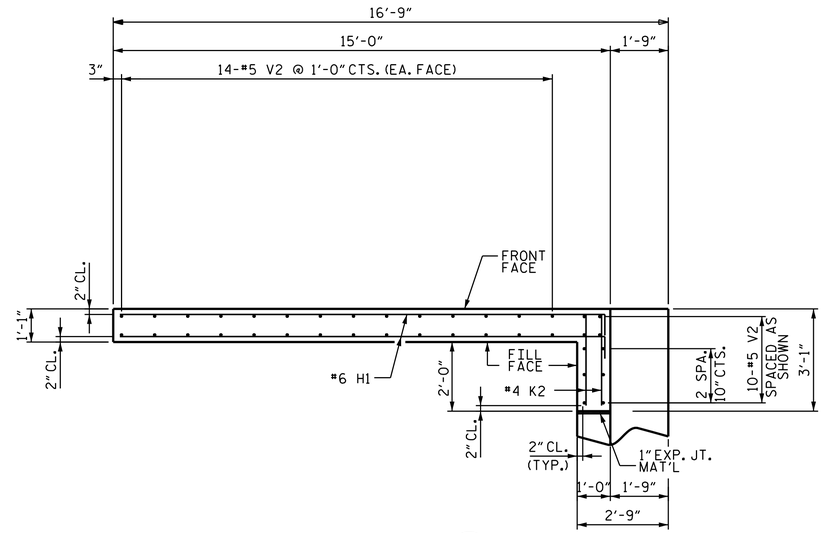

PLAN OF WING (W2)

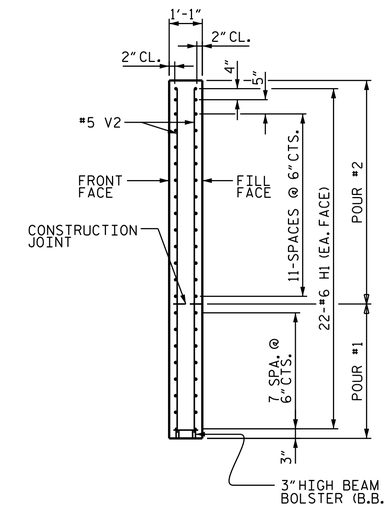

SECTION X-X

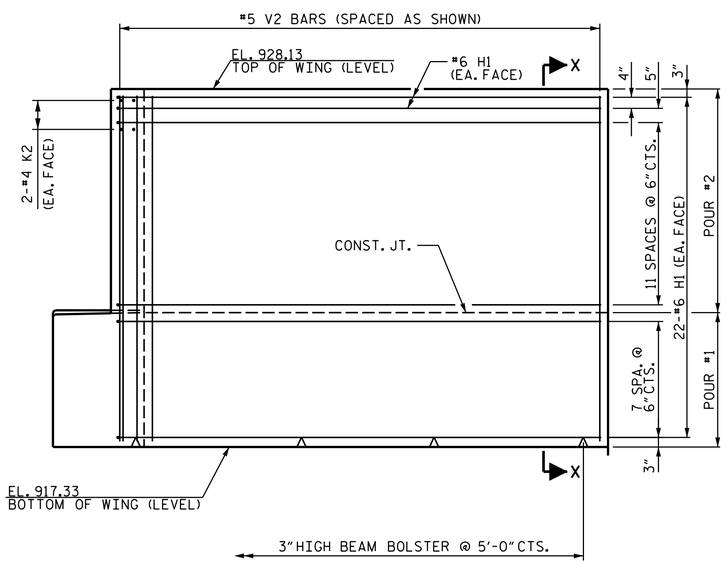

ELEVATION OF WING (W1)

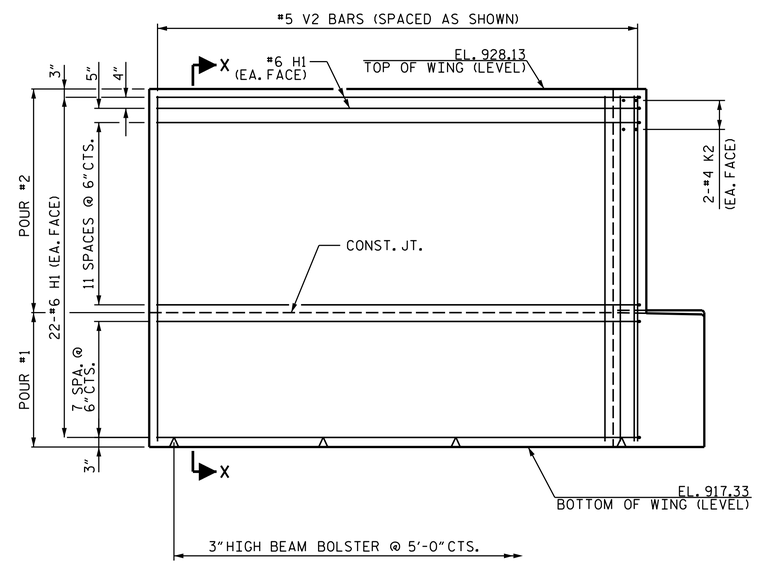

PROJECT NO. B-5831

SURRY/YADKIN COUNTY

STATION: 32+28.00 -L-

SHEET 2 OF 4

DRAWN BY :	ZCS	DATE :	5/24
CHECKED BY :	MGC	DATE :	5/24
DESIGN ENGINEER OF RECORD :	ZCS	DATE :	5/24

NORTH CAROLINA PROFESSIONAL SEAL 20125 ENGINEER MARSHALL G. CHECK, JR.

Marshall G. Check, Jr.
5FBCC2F3A4DC413...

9/23/2025

DOCUMENT NOT CONSIDERED FINAL UNLESS ALL SIGNATURES COMPLETED

TGS ENGINEERS
706 HILLSBOROUGH STREET
SUITE 200
RALEIGH, NC 27603
PH (919) 773-8887
CORP. LICENSE NO.: C-0275

STATE OF NORTH CAROLINA
DEPARTMENT OF TRANSPORTATION
RALEIGH

SUBSTRUCTURE

END BENT 2
WING DETAILS

REVISIONS								
NO.	BY:	DATE:	NO.	BY:	DATE:		SHEET NO.	S-56
1			3				TOTAL SHEETS	61
2			4					

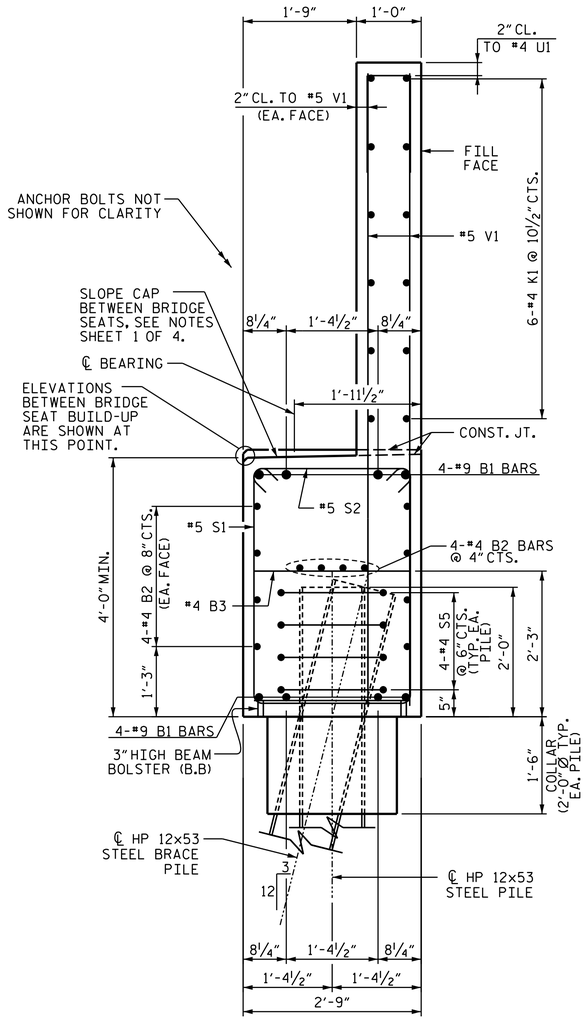

SECTION A-A

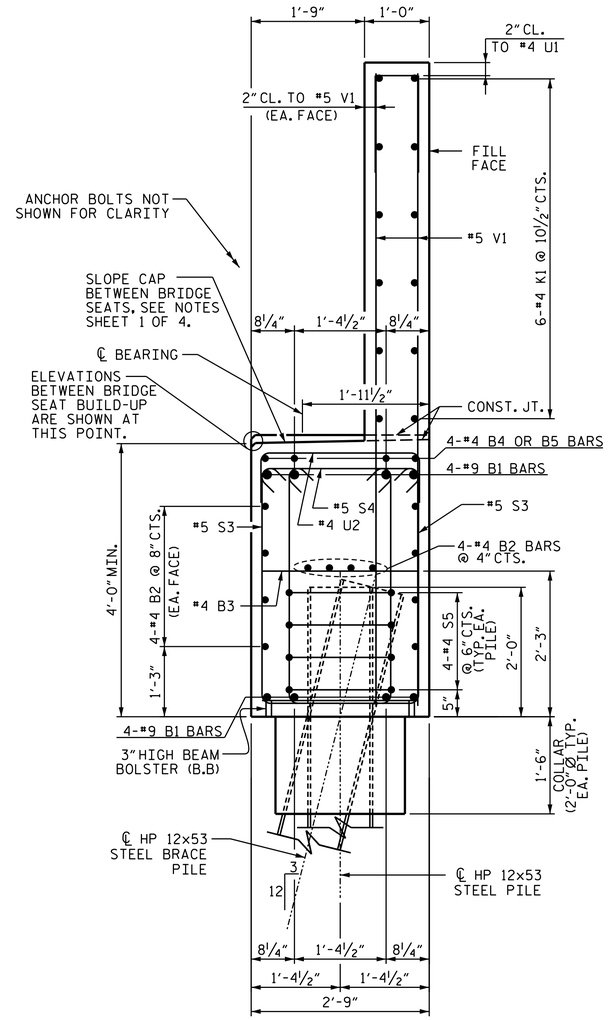

SECTION B-B

PROJECT NO. B-5831

SURRY/YADKIN COUNTY

STATION: 32+28.00 -L-

SHEET 3 OF 4

NORTH CAROLINA PROFESSIONAL SEAL 20125 ENGINEER MARSHALL G. CHECK, JR.

Signed by: Marshall G. Check, Jr.
5FBCC2F3A4DC413...

9/23/2025

DOCUMENT NOT CONSIDERED FINAL UNLESS ALL SIGNATURES COMPLETED

TGS ENGINEERS
706 HILLSBOROUGH STREET
SUITE 200
RALEIGH, NC 27603
PH (919) 773-8887
CORP. LICENSE NO.: C-0275

STATE OF NORTH CAROLINA
DEPARTMENT OF TRANSPORTATION
RALEIGH

SUBSTRUCTURE

END BENT 2 DETAILS

REVISIONS						
NO.	BY:	DATE:	NO.	BY:	DATE:	
1			3			
2			4			

SHEET NO. S-57

TOTAL SHEETS 61

DRAWN BY :	ZCS	DATE :	5/24
CHECKED BY :	MGC	DATE :	5/24
DESIGN ENGINEER OF RECORD :	ZCS	DATE :	5/24

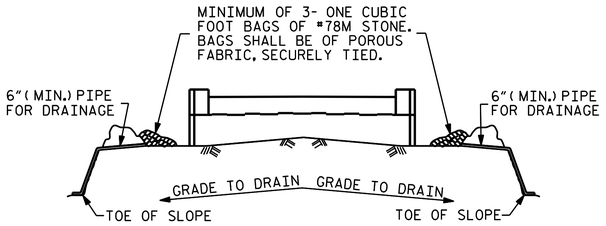

BAGGED STONE AND PIPE SHALL BE PLACED IMMEDIATELY AFTER COMPLETION OF END BENT EXCAVATION. PIPE MAY BE EITHER CONCRETE, CORRUGATED STEEL, CORRUGATED ALUMINUM ALLOY, OR CORRUGATED PLASTIC. PERFORATED PIPE WILL NOT BE ALLOWED.

BAGGED STONE SHALL REMAIN IN PLACE UNTIL THE ENGINEER DIRECTS THAT IT BE REMOVED. THE CONTRACTOR SHALL REMOVE AND DISPOSE OF SILT ACCUMULATIONS AT BAGGED STONE WHEN SO DIRECTED BY THE ENGINEER. BAGS SHALL BE REMOVED AND REPLACED WHENEVER THE ENGINEER DETERMINES THAT THEY HAVE DETERIORATED AND LOST THEIR EFFECTIVENESS.

NO SEPARATE PAYMENT WILL BE MADE FOR THIS WORK AND THE ENTIRE COST OF THIS WORK SHALL BE INCLUDED IN THE UNIT CONTRACT PRICE BID FOR THE SEVERAL PAY ITEMS.

TEMPORARY DRAINAGE AT END BENT

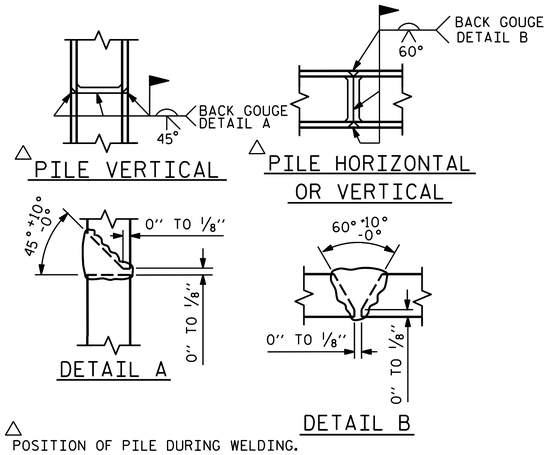

△ POSITION OF PILE DURING WELDING.

PILE SPLICE DETAILS

BAR TYPES

ALL BAR DIMENSIONS ARE OUT TO OUT.

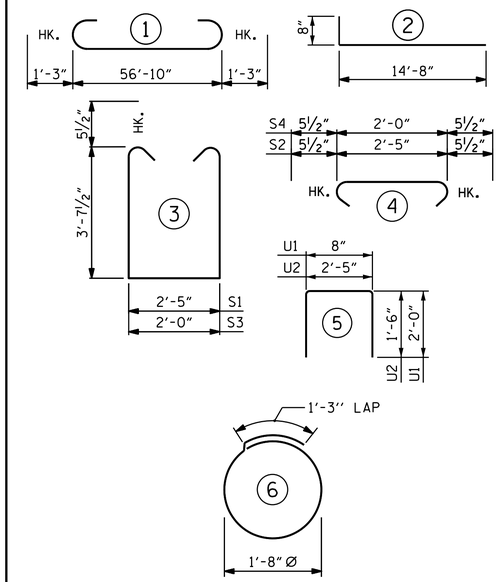

BILL OF MATERIAL

END BENT 2

BAR	NO.	SIZE	TYPE	LENGTH	WEIGHT
B1	8	#9	1	59'-4"	1,614
B2	24	#4	STR	29'-9"	477
B3	14	#4	STR	2'-5"	23
B4	8	#4	STR	4'-3"	23
B5	4	#4	STR	12'-8"	34
H1	88	#6	2	15'-4"	2,027
K1	24	#4	STR.	29'-9"	477
K2	8	#4	STR.	2'-8"	14
S1	40	#5	3	10'-7"	442
S2	40	#5	4	3'-4"	139
S3	48	#5	3	10'-2"	509
S4	48	#5	4	2'-11"	146
S5	44	#4	6	6'-6"	191
U1	51	#4	5	4'-8"	159
U2	19	#4	5	5'-5"	69
V1	102	#5	STR.	9'-0"	957
V2	76	#5	STR.	10'-4"	826
REINFORCING STEEL					8,127 LBS.

CLASS A CONCRETE BREAKDOWN

POUR #1	CAP, LOWER PART OF WINGS & COLLARS	30.9 C.Y.
POUR #2	BACKWALL AND UPPER PART OF WINGS	19.6 C.Y.
TOTAL CLASS A CONCRETE		50.5 C.Y.

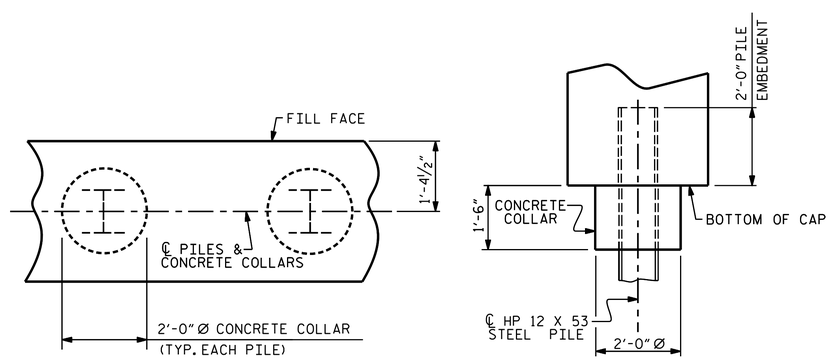

PLAN

ELEVATION

CORROSION PROTECTION FOR STEEL PILES DETAIL

PROJECT NO. B-5831

SURRY/YADKIN COUNTY

STATION: 32+28.00 -L-

SHEET 4 OF 4

NORTH CAROLINA PROFESSIONAL SEAL 20125 ENGINEER

DocuSigned by: Marcus B. Wheeler, Jr.
5FBCC2F3A4DC413...

9/23/2025

DOCUMENT NOT CONSIDERED FINAL UNLESS ALL SIGNATURES COMPLETED

TGS ENGINEERS
706 HILLSBOROUGH STREET
SUITE 200
RALEIGH, NC 27603
PH (919) 773-8887
CORP. LICENSE NO.: C-0275

STATE OF NORTH CAROLINA
DEPARTMENT OF TRANSPORTATION
RALEIGH

SUBSTRUCTURE

END BENT 2 DETAILS

REVISIONS						SHEET NO.
NO.	BY:	DATE:	NO.	BY:	DATE:	S-58
1			3			TOTAL SHEETS
2			4			61

DRAWN BY :	ZCS	DATE :	5/24
CHECKED BY :	MGC	DATE :	5/24
DESIGN ENGINEER OF RECORD :	ZCS	DATE :	5/24

NOTES :

FOR BERM WIDTH DIMENSIONS, SEE GENERAL DRAWING.

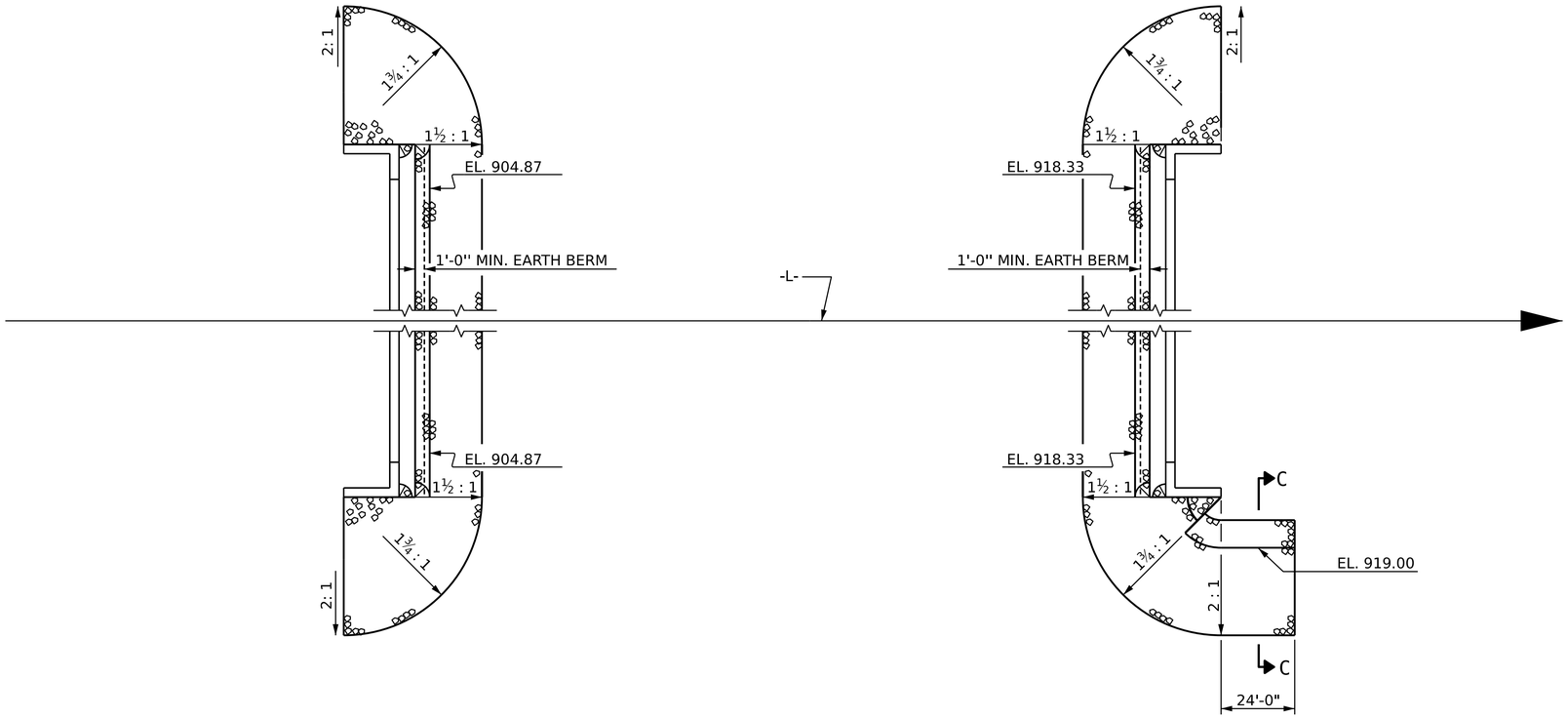

END BENT 1

END BENT 2

PLAN

ESTIMATED QUANTITIES		
BRIDGE @ STA. 32+28.00 -L-	RIP RAP CLASS II (2'-0" THICK)	GEOTEXTILE FOR DRAINAGE
	TONS	SQUARE YARDS
END BENT 1	230	255
END BENT 2	235	260

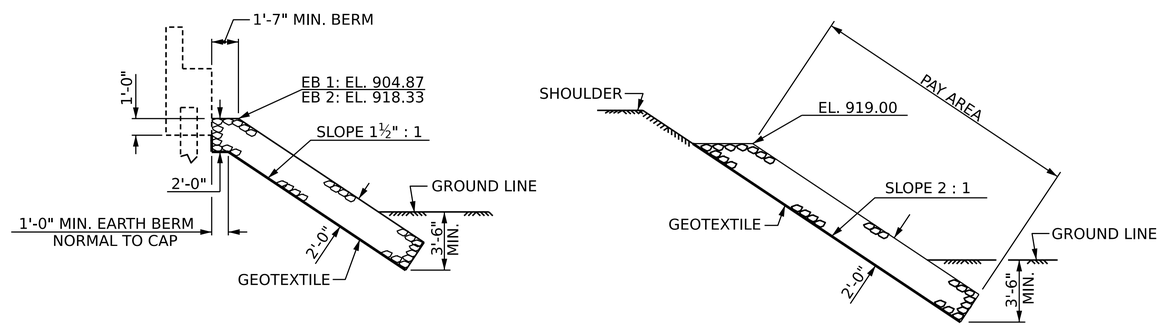

℄ SECTION

SECTION C-C

BERM RIP RAPPED

PROJECT NO. B-5831

SURRY/YADKIN COUNTY

STATION: 32+28.00 -L-

NORTH CAROLINA PROFESSIONAL SEAL 20125 ENGINEER MARSHALL G. SHEEK, JR.

Marshall G. Sheek, Jr.

5FBCC2F3A4DC413...

9/23/2025

DOCUMENT NOT CONSIDERED FINAL UNLESS ALL SIGNATURES COMPLETED

TGS ENGINEERS
706 HILLSBOROUGH STREET
SUITE 200
RALEIGH, NC 27603
PH (919) 773-8887
CORP. LICENSE NO.: C-0275

STATE OF NORTH CAROLINA
DEPARTMENT OF TRANSPORTATION
RALEIGH

STANDARD

RIP RAP DETAILS

REVISIONS						
NO.	BY:	DATE:	NO.	BY:	DATE:	
1			3			
2			4			

SHEET NO. S-59

TOTAL SHEETS 61

ASSEMBLED BY : ZCS		DATE : 5/24	
CHECKED BY : MGC		DATE : 6/24	
DRAWN BY : REK 1/84	REV. 10/1/11		MAA/GM
CHECKED BY : RDU 1/84	REV. 12/21/11		MAA/GM
	REV. 12/17		MAA/THC

9/18/2025
c:\workdir\ncdot-pw.bentley.com_ncdot-pw-01\zachary smith\d0166590\Rip Rap.dgn
ZSmith

STD. NO. RR1 Sht. 2

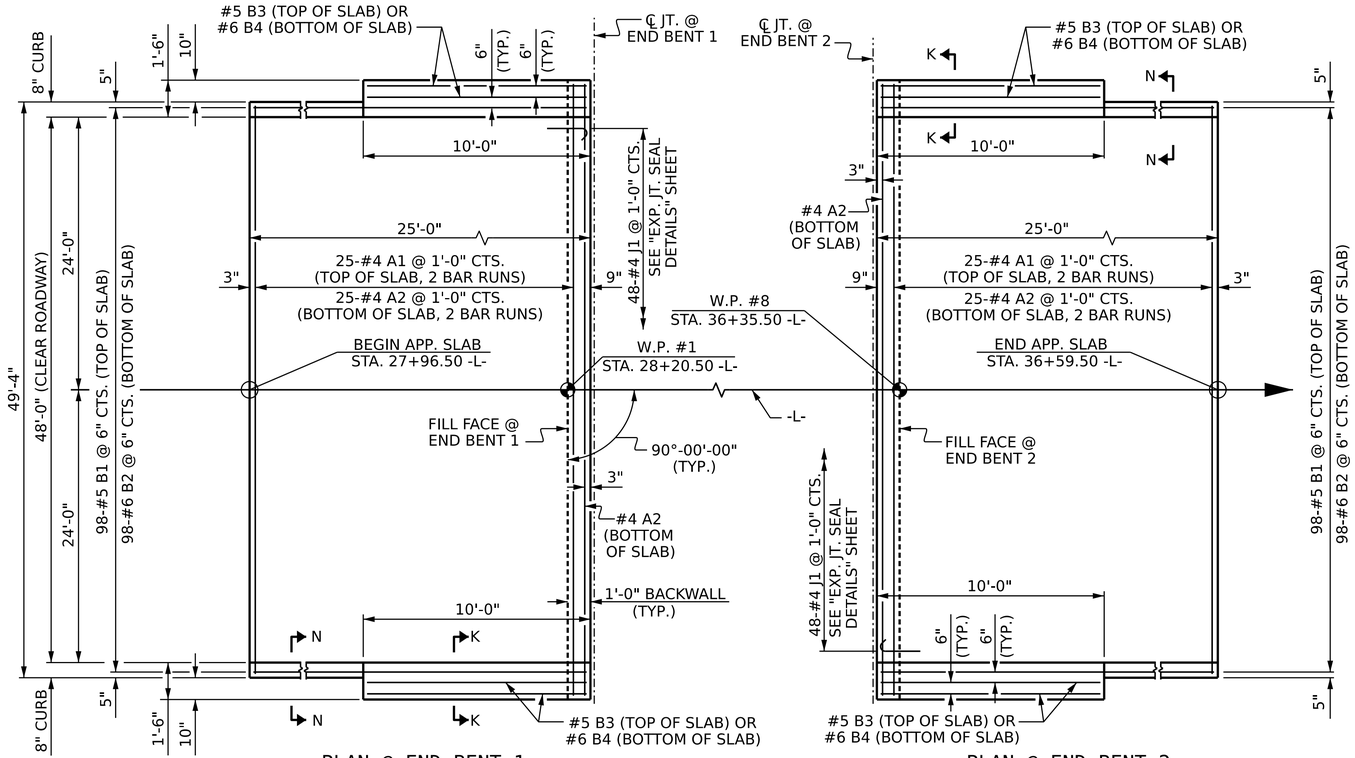

PLAN @ END BENT 1

PLAN @ END BENT 2

DIMENSIONS SHOWN ARE TYPICAL FOR BOTH APPROACH SLABS

NOTES

FOR BRIDGE APPROACH FILL, SEE ROADWAY PLANS.

APPROACH SLAB SHALL NOT BE CONSTRUCTED PRIOR TO COMPLETION OF THE BRIDGE DECK.

AREA BETWEEN THE WINGWALL AND APPROACH SLAB SHALL BE GRADED TO DRAIN THE WATER AWAY FROM THE FILL FACE OF THE BRIDGE AND SHALL BE PAVED. SEE ROADWAY PLANS.

FOR EXPANSION JOINT SEALS, SEE SPECIAL PROVISIONS.

FOR GUARDRAIL ANCHORAGE, SEE "GUARDRAIL ANCHORAGE" SHEET.

BILL OF MATERIAL

APPROACH SLAB AT EB 1

BAR	NO.	SIZE	TYPE	LENGTH	WEIGHT
*A1	50	#4	STR	26'-4"	880
A2	52	#4	STR	26'-2"	909
*B1	98	#5	STR	24'-4"	2487
B2	98	#6	STR	24'-8"	3631
*B3	4	#5	STR	9'-7"	40
B4	4	#6	STR	9'-7"	58
* J1	48	#4	1	1'-5"	45

REINFORCING STEEL LBS. 4598
* EPOXY COATED REINFORCING STEEL LBS. 3452
CLASS AA CONCRETE C. Y. 54.5

APPROACH SLAB AT EB 2

BAR	NO.	SIZE	TYPE	LENGTH	WEIGHT
*A1	50	#4	STR	26'-4"	880
A2	52	#4	STR	26'-2"	909
*B1	98	#5	STR	24'-4"	2487
B2	98	#6	STR	24'-8"	3631
*B3	4	#5	STR	9'-7"	40
B4	4	#6	STR	9'-7"	58
* J1	48	#4	1	1'-5"	45

REINFORCING STEEL LBS. 4598
* EPOXY COATED REINFORCING STEEL LBS. 3452
CLASS AA CONCRETE C. Y. 54.5

BAR TYPE

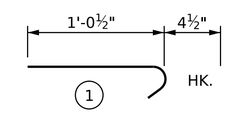

ALL BAR DIMENSIONS ARE OUT TO OUT

** QUANTITIES FOR BARRIER RAIL ARE NOT INCLUDED. SEE SHEET 2 OF 2.

THE QUANTITY OF #4 J1 BARS ON THE BILL OF MATERIAL IS BASED ON 1'-0" CENTERS. J1 BARS SHALL BE PLACED AT EACH VERTICAL STUD ANCHOR BOLT. IN THE EVENT THAT THE NUMBER OF VERTICAL STUD ANCHORS EXCEEDS THE NUMBER OF J1 BARS SPECIFIED, ADDITIONAL J1 BARS WILL NOT BE REQUIRED.

SPLICE LENGTHS		
BAR SIZE	EPOXY COATED	UNCOATED
#4	1'-11"	1'-7"
#5	2'-5"	2'-0"
#6	3'-7"	2'-5"

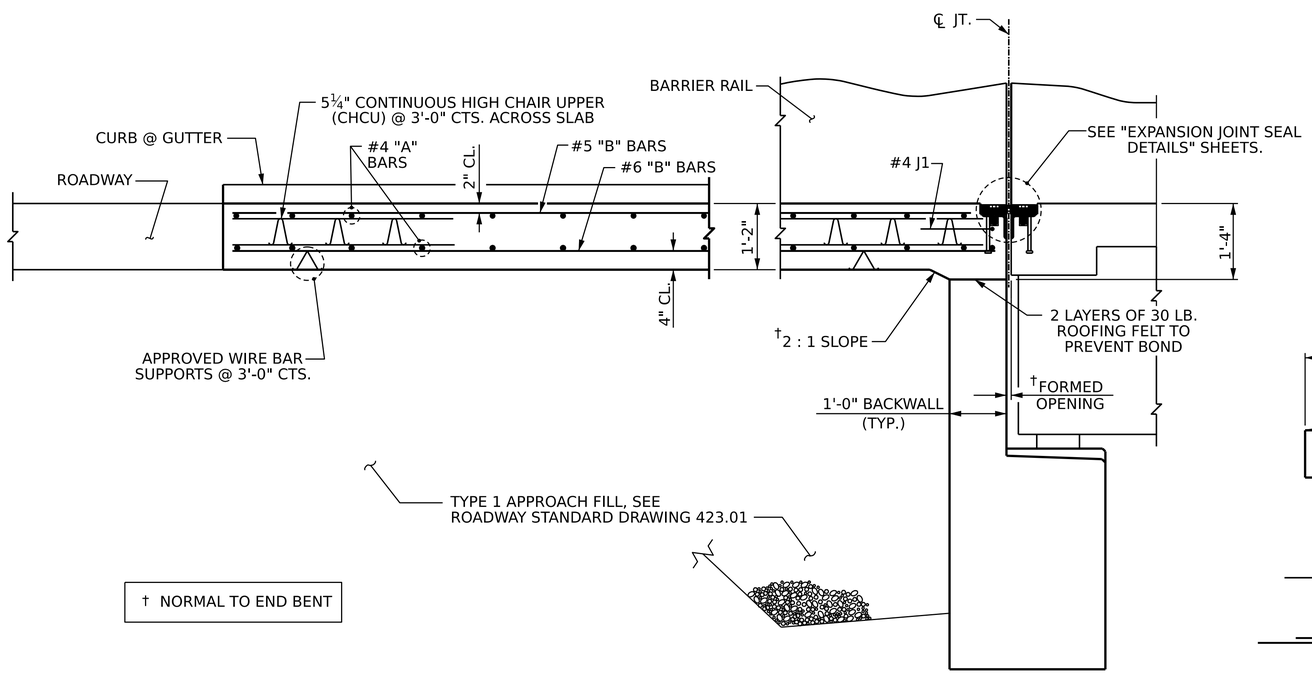

† NORMAL TO END BENT

SECTION THRU SLAB

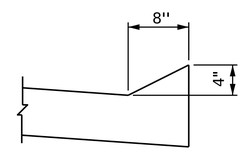

SECTION N-N

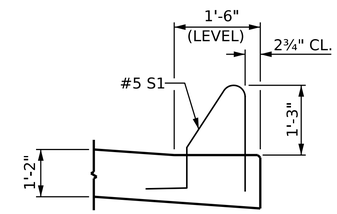

SECTION K-K

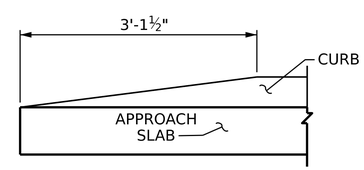

END OF CURB WITHOUT SHOULDER BERM GUTTER

CURB DETAILS

PROJECT NO. B-5831
SURRY/YADKIN COUNTY
STATION: 32+28.00 -L-

SHEET 1 OF 2

NORTH CAROLINA PROFESSIONAL SEAL 20125 ENGINEER MARSHALL G. CHECK, JR.
Marshall G. Check, Jr.
5FBCC2F3A4DC413...
9/23/2025

DOCUMENT NOT CONSIDERED FINAL UNLESS ALL SIGNATURES COMPLETED

TGS ENGINEERS
706 HILLSBOROUGH STREET
SUITE 200
RALEIGH, NC 27603
PH (919) 773-8887
CORP. LICENSE NO.: C-0275

STATE OF NORTH CAROLINA
DEPARTMENT OF TRANSPORTATION
RALEIGH

STANDARD

BRIDGE APPROACH SLAB FOR RIGID PAVEMENT

REVISIONS						
NO.	BY:	DATE:	NO.	BY:	DATE:	
1			3			
2			4			

SHEET NO. S-60
TOTAL SHEETS 61

ASSEMBLED BY:	ZCS	DATE :	5/24
CHECKED BY :	MGC	DATE :	5/24
DRAWN BY : RH	5/99	REV. 6/13	MAA/GM
CHECKED BY : RDR	5/99	REV. 12/17	MAA/THC
		REV. 07/23	BNB/SNM

9/18/2025
c:\workdir\ncdot-pw.bentley.com_ncdot-pw-01\zachary smith\d0166590\Approach Slab 1 of 2.dgn
ZSmith

STD. NO. BAS1 SHT.2

8/26/21

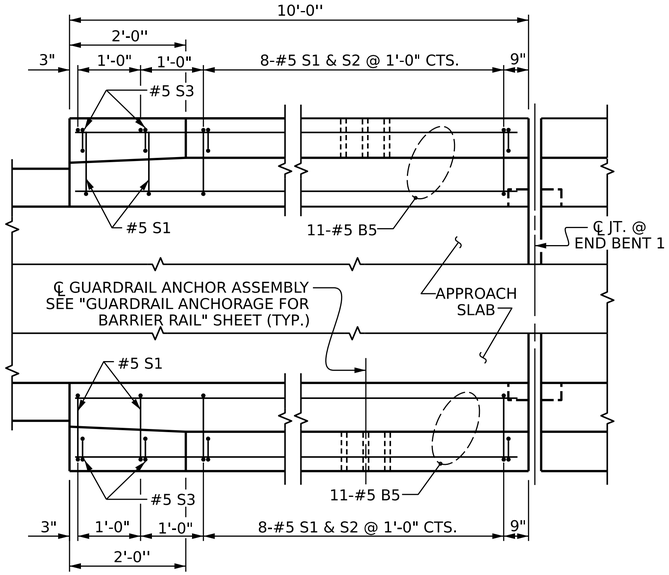

END BENT 1

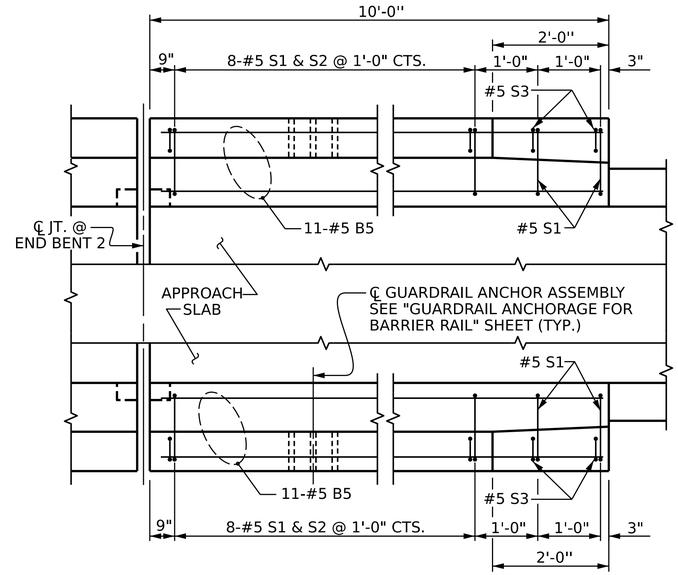

END BENT 2

PLAN OF BARRIER RAIL

NOTES

THE COST OF THE BARRIER RAIL ON THE APPROACH SLAB SHALL BE INCLUDED IN THE LINEAR FOOT CONTRACT PRICE BID FOR "CONCRETE BARRIER RAIL".

THE BARRIER RAIL ON EACH APPROACH SLAB SHALL NOT BE CAST UNTIL ALL APPROACH SLAB CONCRETE HAS BEEN CAST AND HAS REACHED A MINIMUM COMPRESSIVE STRENGTH OF 3,000 PSI.

ALL REINFORCING STEEL IN BARRIER RAILS SHALL BE EPOXY COATED.

BAR TYPES

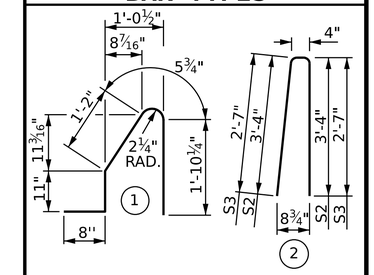

ALL BAR DIMENSIONS ARE OUT TO OUT

BILL OF MATERIAL

BARRIER RAIL ONLY

BAR	NO.	SIZE	TYPE	LENGTH	WEIGHT
* B5	44	#5	STR	9'-7"	440
* S1	40	#5	1	5'-1"	212
* S2	32	#5	2	7'-0"	234
* S3	8	#5	2	5'-6"	46
* EPOXY COATED REINFORCING STEEL					LBS. 932
CLASS AA CONCRETE					C. Y. 5.4

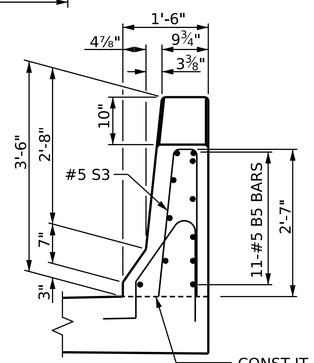

END VIEW

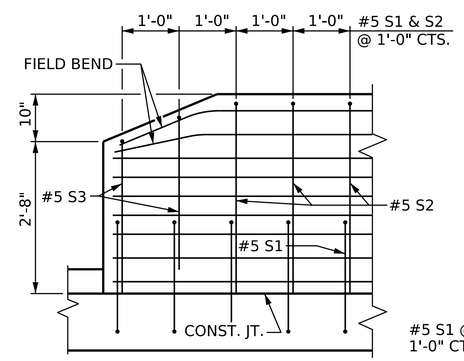

SIDE VIEW

END OF RAIL DETAILS

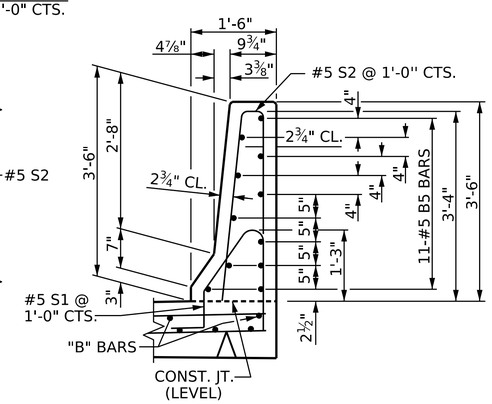

SECTION THRU RAIL

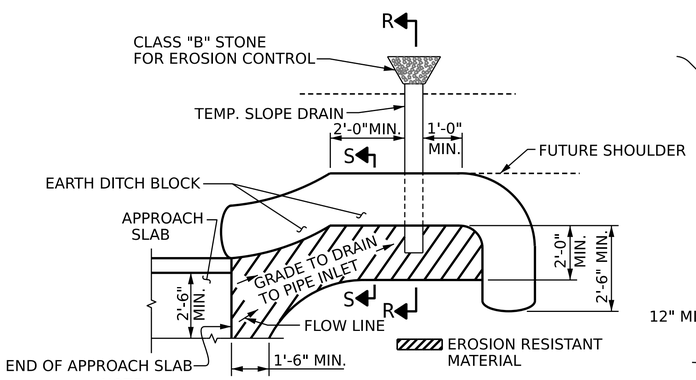

NOTE:
IMMEDIATELY AFTER THE CONSTRUCTION OF THE APPROACH SLAB, THE CONTRACTOR SHALL PROVIDE TEMPORARY BERM AND SLOPE DRAIN. CONTRACTOR SHALL GRADE TO PIPE INLET AND PROVIDE EROSION RESISTANT MATERIAL AS SHOWN. THE EROSION RESISTANT MATERIAL SHALL BE EITHER 1) ASPHALT PLANT MIX, TYPE 1 OR TYPE 2, MIN. 2" DEPTH, 2) EROSION CONTROL MAT, OR 3) CONCRETE, AS DIRECTED BY THE ENGINEER. THE SLOPE DRAIN SHALL CONSIST OF A NON-PERFORATED TEMPORARY DRAINAGE PIPE, 12 INCHES IN DIAMETER.

PLAN VIEW

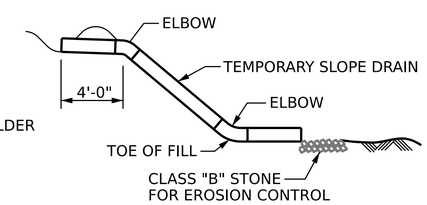

SECTION R-R

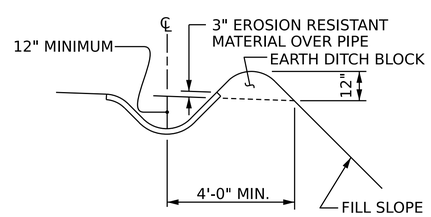

SECTION S-S

TEMPORARY BERM AND SLOPE DRAIN DETAILS

(TO BE USED WHEN SHOULDER BERM GUTTER IS REQUIRED)

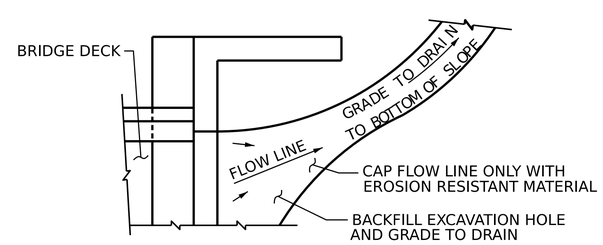

NOTE: IF THE APPROACH SLAB IS NOT CONSTRUCTED IMMEDIATELY AFTER THE BACKFILLING OF THE END BENT EXCAVATION, GRADE TO DRAIN TO THE BOTTOM OF THE SLOPE AND PROVIDE EROSION RESISTANT MATERIAL, SUCH AS FIBERGLASS ROVING OR AS DIRECTED BY THE ENGINEER TO PREVENT SOIL EROSION AND TO PROTECT THE AREA ADJACENT TO THE STRUCTURE. THE CONTRACTOR WILL BE REQUIRED TO REMOVE THESE MATERIALS PRIOR TO CONSTRUCTION OF THE APPROACH SLAB.

TEMPORARY DRAINAGE DETAIL

PROJECT NO. B-5831
SURRY/YADKIN COUNTY
STATION: 32+28.00 -L-

SHEET 2 OF 2

NORTH CAROLINA PROFESSIONAL SEAL 20125 ENGINEER MARSHALL C. CHECK, JR.
Marshall C. Check, Jr.
SFBCC2F3A4DC413...
9/23/2025

DOCUMENT NOT CONSIDERED FINAL UNLESS ALL SIGNATURES COMPLETED

TGS ENGINEERS
706 HILLSBOROUGH STREET
SUITE 200
RALEIGH, NC 27603
PH (919) 773-8887
CORP. LICENSE NO.: C-0275

STATE OF NORTH CAROLINA
DEPARTMENT OF TRANSPORTATION
RALEIGH

STANDARD

BRIDGE APPROACH SLAB DETAILS

REVISIONS							
NO.	BY:	DATE:	NO.	BY:	DATE:	SHEET NO.	S-61
1			3			TOTAL SHEETS	61
2			4				

ASSEMBLED BY:	ZCS	DATE :	5/24
CHECKED BY :	MGC	DATE :	5/24
DRAWN BY : FCJ 11/88		REV. 6/13	MAA/GM
CHECKED BY : ARB 11/88		REV. 12/17	MAA/THC
		REV. 5/18	MAA/THC

12/17/2024
c:\workdir\ncdot-pw.bentley.com_ncdot-pw-01\zachary smith\d0166590\Approach Slab 2 of 2.dgn
ZSmith

STD. BAS4 Sht. 03

STANDARD NOTES

DESIGN DATA:

SPECIFICATIONS	AASHTO (CURRENT)
LIVE LOAD	SEE PLANS
IMPACT ALLOWANCE	SEE AASHTO
STRESS IN EXTREME FIBER OF STRUCTURAL STEEL - AASHTO M270 GRADE 36	20,000 LBS. PER SQ. IN.
- AASHTO M270 GRADE 50W	27,000 LBS. PER SQ. IN.
- AASHTO M270 GRADE 50	27,000 LBS. PER SQ. IN.
REINFORCING STEEL IN TENSION - GRADE 60	24,000 LBS. PER SQ. IN.
CONCRETE IN COMPRESSION	1,200 LBS. PER SQ. IN.
CONCRETE IN SHEAR	SEE AASHTO
STRUCTURAL TIMBER - TREATED OR UNTREATED EXTREME FIBER STRESS	1,800 LBS. PER SQ. IN.
COMPRESSION PERPENDICULAR TO GRAIN OF TIMBER	375 LBS. PER SQ. IN.
EQUIVALENT FLUID PRESSURE OF EARTH	30 LBS. PER CU. FT. (MINIMUM)

MATERIAL AND WORKMANSHIP:

EXCEPT AS MAY OTHERWISE BE SPECIFIED ON PLANS OR IN THE SPECIAL PROVISIONS, ALL MATERIAL AND WORKMANSHIP SHALL BE IN ACCORDANCE WITH THE 2024 "STANDARD SPECIFICATIONS FOR ROADS AND STRUCTURES" OF THE N. C. DEPARTMENT OF TRANSPORTATION.

STEEL SHEET PILING FOR PERMANENT OR TEMPORARY APPLICATIONS SHALL BE HOT ROLLED.

CONCRETE:

UNLESS OTHERWISE REQUIRED ON PLANS, CLASS A CONCRETE SHALL BE USED FOR ALL PORTIONS OF ALL STRUCTURES WITH THE EXCEPTION THAT: CLASS AA CONCRETE SHALL BE USED IN BRIDGE SUPERSTRUCTURES, ABUTMENT BACKWALLS, AND APPROACH SLABS; AND CLASS B CONCRETE SHALL BE USED FOR SLOPE PROTECTION AND RIP RAP.

CONCRETE CHAMFERS:

UNLESS OTHERWISE NOTED ON THE PLANS, ALL EXPOSED CORNERS ON STRUCTURES SHALL BE CHAMFERED ¾" WITH THE FOLLOWING EXCEPTIONS: TOP CORNERS OF CURBS MAY BE ROUNDED TO 1½" RADIUS WHICH IS BUILT INTO CURB FORMS; CORNERS OF TRANSVERSE FLOOR EXPANSION JOINTS SHALL BE ROUNDED WITH A ¼" FINISHING TOOL UNLESS OTHERWISE REQUIRED ON PLANS; AND CORNERS OF EXPANSION JOINTS IN THE ROADWAY FACES AND TOPS OF CURBS AND SIDEWALKS SHALL BE ROUNDED TO A ¼" RADIUS WITH A FINISHING STONE OR TOOL UNLESS OTHERWISE REQUIRED ON PLANS.

DOWELS:

DOWELS WHEN INDICATED ON PLANS AS FOR CULVERT EXTENSIONS, SHALL BE EMBEDDED AT LEAST 12" INTO THE OLD CONCRETE AND GROUTED INTO PLACE WITH 1:2 CEMENT MORTAR.

ALLOWANCE FOR DEAD LOAD DEFLECTION, SETTLEMENT, ETC. IN CASTING SUPERSTRUCTURES:

BRIDGES SHALL BE BUILT ON THE GRADE OR VERTICAL CURVE SHOWN ON PLANS. SLABS, CURBS AND PARAPETS SHALL CONFORM TO THE GRADE OR CURVE.

ALL DIMENSIONS WHICH ARE GIVEN IN SECTION AND ARE AFFECTED BY DEAD LOAD DEFLECTIONS ARE DIMENSIONS AT CENTER LINE OF BEARING UNLESS OTHERWISE NOTED ON PLANS. IN SETTING FORMS FOR STEEL BEAM BRIDGES AND PRESTRESSED CONCRETE GIRDER BRIDGES, ADJUSTMENTS SHALL BE MADE DUE TO THE DEAD LOAD DEFLECTIONS FOR THE ELEVATIONS SHOWN. WHERE BLOCKS ARE SHOWN OVER BEAMS FOR BUILDING UP TO THE SLAB, THE VERTICAL DIMENSIONS OF THE BLOCKS SHALL BE ADJUSTED BETWEEN BEARINGS TO COMPENSATE FOR DEAD LOAD DEFLECTIONS, VERTICAL CURVE ORDINATE, AND ACTUAL BEAM CAMBER. WHERE BOTTOM OF SLAB IS IN LINE WITH BOTTOM OF TOP FLANGES, DEPTH OF SLAB BETWEEN BEARINGS SHALL BE ADJUSTED TO COMPENSATE FOR DEAD LOAD DEFLECTION, VERTICAL CURVE ORDINATE, AND ACTUAL BEAM CAMBER.

IN SETTING FALSEWORK AND FORMS FOR REINFORCED CONCRETE SPANS, AN ALLOWANCE SHALL BE MADE FOR DEAD LOAD DEFLECTIONS, SETTLEMENT OF FALSEWORK, AND PERMANENT CAMBER WHICH SHALL BE PROVIDED FOR IN ADDITION TO THE ELEVATIONS SHOWN. AFTER REMOVAL OF THE FALSEWORK, THE FINISHED STRUCTURES SHALL CONFORM TO THE PROFILE AND ELEVATIONS SHOWN ON THE PLANS AND CONSTRUCTION ELEVATIONS FURNISHED BY THE ENGINEER.

DETAILED DRAWINGS FOR FALSEWORK OR FORMS FOR BRIDGE SUPERSTRUCTURE AND ANY STRUCTURE OR PARTS OF A STRUCTURE AS NOTED ON THE PLANS SHALL BE SUBMITTED TO THE ENGINEER FOR APPROVAL BEFORE CONSTRUCTION OF THE FALSEWORK OR FORMS IS STARTED.

REINFORCING STEEL:

ALL REINFORCING STEEL SHALL BE DEFORMED. DIMENSIONS RELATIVE TO PLACEMENT OF REINFORCING ARE TO CENTERS OF BARS UNLESS OTHERWISE INDICATED IN THE PLANS. DIMENSIONS ON BAR DETAILS ARE TO CENTERS OF BARS OR ARE OUT TO OUT AS INDICATED ON PLANS.

WIRE BAR SUPPORTS SHALL BE PROVIDED FOR REINFORCING STEEL WHERE INDICATED ON THE PLANS. WHEN BAR SUPPORT PIECES ARE PLACED IN CONTINUOUS LINES, THEY SHALL BE SO PLACED THAT THE ENDS OF THE SUPPORTING WIRES SHALL BE LAPPED TO LOCK LEGS ON ADJOINING PIECES.

STRUCTURAL STEEL:

AT THE CONTRACTOR'S OPTION, HE MAY SUBSTITUTE ⅞" ∅ SHEAR STUDS FOR THE ¾" ∅ STUDS SPECIFIED ON THE PLANS. THIS SUBSTITUTION SHALL BE MADE AT THE RATE OF 3 - ⅞" ∅ STUDS FOR 4 - ¾" ∅ STUDS, AND STUD SPACING CHANGES SHALL BE MADE AS NECESSARY TO PROVIDE THE SAME EQUIVALENT NUMBER OF ⅞" ∅ STUDS ALONG THE BEAM AS SHOWN FOR ¾" ∅ STUDS BASED ON THE RATIO OF 3 - ⅞"∅ STUDS FOR 4 - ¾" ∅ STUDS. STUDS OF THE LENGTH SPECIFIED ON THE PLANS MUST BE PROVIDED. THE MAXIMUM SPACING SHALL BE 2'-0".

EXCEPT AT THE INTERIOR SUPPORTS OF CONTINUOUS BEAMS WHERE THE COVER PLATE IS IN CONTACT WITH BEARING PLATE, THE CONTRACTOR MAY, AT HIS OPTION, SUBSTITUTE FOR THE COVER PLATES DESIGNATED ON THE PLANS COVER PLATES OF THE EQUIVALENT AREA PROVIDED THESE PLATES ARE AT LEAST 5/16" IN THICKNESS AND DO NOT EXCEED A WIDTH EQUAL TO THE FLANGE WIDTH LESS 2" OR A THICKNESS EQUAL TO 2 TIMES THE FLANGE THICKNESS. THE SIZE OF FILLET WELDS SHALL CONFORM TO THE REQUIREMENTS OF THE CURRENT ANSI/AASHTO/AWS "BRIDGE WELDING CODE". ELECTROSLAG WELDING WILL NOT BE PERMITTED.

WITH THE SOLE EXCEPTION OF EDGES AT SURFACES WHICH BEAR ON OTHER SURFACES, ALL SHARP EDGES AND ENDS OF SHAPES AND PLATES SHALL BE SLIGHTLY ROUNDED BY SUITABLE MEANS TO A RADIUS OF APPROXIMATELY 1/16" OR EQUIVALENT FLAT SURFACE AT A SUITABLE ANGLE PRIOR TO PAINTING, GALVANIZING, OR METALLIZING.

HANDRAILS AND POSTS:

METAL STANDARDS AND FACES OF THE CONCRETE END POSTS FOR THE METAL RAIL SHALL BE SET NORMAL TO THE GRADE OF THE CURB, UNLESS OTHERWISE SHOWN ON PLANS. THE METAL RAIL AND TOPS OF CONCRETE POSTS USED WITH THE ALUMINUM RAIL SHALL BE BUILT PARALLEL TO THE GRADE OF THE CURB.

METAL HANDRAILS SHALL BE IN ACCORDANCE WITH THE PLANS. RAILS SHALL BE AS MANUFACTURED FOR BRIDGE RAILING. CASTINGS SHALL BE OF A UNIFORM APPEARANCE. FINS AND OTHER DEFORMATIONS RESULTING FROM CASTING OR OTHERWISE SHALL BE REMOVED IN A MANNER SO THAT A UNIFORM COLORING OF THE COMPLETED CASTING SHALL BE OBTAINED. CASTINGS WITH DISCOLORATIONS OR OF NON-UNIFORM COLORING WILL NOT BE ACCEPTED. CERTIFIED MILL REPORTS ARE REQUIRED FOR METAL RAILS AND POSTS.

SPECIAL NOTES:

GENERALLY, IN CASE OF DISCREPANCY, THIS STANDARD SHEET OF NOTES SHALL GOVERN OVER THE SPECIFICATIONS, BUT THE REMAINDER OF THE PLANS SHALL GOVERN OVER NOTES HEREON, AND SPECIAL PROVISIONS SHALL GOVERN OVER ALL. SEE SPECIFICATIONS ARTICLE 105-4.

Project Special Provisions
Structures

Maintenance and Protection of Traffic Beneath Proposed
Structure at Station 32 + 28.00 -L- (8-13-04) …….…….. ST-2

Construction, Maintenance and Removal of Temporary
Access at Station 32 + 28.00 -L- (2-21-23) ……...…….. ST-2

Thermal Sprayed Coating (Metallization) (12-1-17) …….. ST-4

Expansion Joint Seals (9-30-11) ……..... ST-5

Securing of Vessels (11-30-23) …….. ST-9

Falsework and Formwork (11-30-23) …….……..... ST-9

Submittal of Working Drawings (1-31-25) ……...…….… ST-15

Crane Safety (11-30-23) ……..…….…….. ST-21

Grout for Structures (12-1-17) …….…... ST-22

Asbestos Assessment (11-30-23) …….….….…..….. ST-23

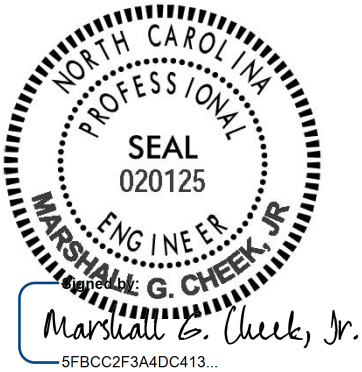

Signed by:
Marshall G. Cheek, Jr.
5FBCC2F3A4DC413...

9/23/2025

MAINTENANCE AND PROTECTION OF TRAFFIC BENEATH PROPOSED STRUCTURE AT STATION 32 + 28.00 -L-____ **(8-13-04)**

GENERAL

Maintain traffic on NC 268 as shown in Traffic Control Plans and as directed by the Engineer.

Provide a minimum temporary vertical clearance of ___22'-8"_____ at all times during construction.

Submit plans and calculations for review and approval for protecting traffic and bracing girders, as described herein, at the above station before beginning work at this location. Have the drawings and design calculations prepared, signed, and sealed by a North Carolina Registered Professional Engineer. The approval of the Engineer will not relieve the Contractor of the responsibility for the safety of the method or equipment.

PROTECTION OF TRAFFIC

Protect traffic from any operation that affords the opportunity for construction materials, equipment, tools, etc. to be dropped into the path of traffic beneath the structure. Based on Contractor means and methods, determine and clearly define all dead and live loads for this system, which, at a minimum, shall be installed between beams or girders over any travelway or shoulder area where traffic is maintained. Install the protective system before beginning any construction operations over traffic. In addition, for these same areas, keep the overhang falsework in place until after the rails have been poured.

BRACING GIRDERS

Brace girders to resist wind forces, weight of forms and other temporary loads, especially those eccentric to the vertical axis of the member during all stages of erection and construction. Before casting of intermediate diaphragms, decks, or connecting steel diaphragms do not allow the horizontal movement of girders to exceed ½ inch.

BASIS OF PAYMENT

Payment at the contract unit prices for the various pay items will be full compensation for the above work.

CONSTRUCTION, MAINTENANCE AND REMOVAL OF TEMPORARY ACCESS AT STATION _32 + 28.00 -L- **(02-21-23)**

GENERAL

Construct, maintain, and remove the temporary access required to provide the working area necessary for construction of the new bridge, construction of the temporary detour structure, or for the removal of an existing bridge, as applicable. Temporary access may involve the use of

a rock causeway [workpad], a work bridge, or other methods; however, all types of temporary access are required to meet the requirements of all permits, the plans, the *Standard Specifications*, and this Special Provision.

TEMPORARY ROCK CAUSEWAY [WORKPAD]

At the contractor's option, construction of a temporary rock causeway [workpad] within the limits shown on the plans is acceptable, provided the causeway [workpad] impacts are in compliance with all permits. Build the causeway [workpad] with Class II riprap topped by a layer of Class B riprap or as otherwise designated on the plans or approved by the Engineer. If desired, recycle the Class II riprap used in the causeway [workpad] for placement in the final riprap slope protection as directed by the Engineer. No payment will be made for recycled riprap as this material is considered incidental to the causeway [workpad] placement and removal. If this option is exercised, no adjustment in contract bid price will be allowed due to an underrun in the quantity of "Rip Rap Class II (2'-0" Thick)".

Completely remove all causeway [workpad] material including pipes and return the entire causeway [workpad] footprint to the original contours and elevations within 90 days of the completion of the deck slab or as otherwise required by permits.

For sites affected by moratoriums or restrictions on in-stream work: Do not construct or remove causeway [workpad] during the moratorium period shown on the permit. If the completion of the deck slab falls within the prohibitive dates for causeway [workpad] construction or removal, begin causeway [workpad] removal immediately following the prohibitive dates.

TEMPORARY WORK BRIDGE

At the contractor's option, construction of a temporary work bridge in lieu of the causeway(s) [workpad] is acceptable, provided the temporary work bridge satisfies all permits. Submit details of the temporary work bridge to the Engineer prior to constructing the work bridge to ensure conformance with the plans and all permits. Completely remove the temporary bridge prior to final acceptance or as otherwise required by the permits.

MEASUREMENT AND PAYMENT

Construction, Maintenance and Removal of Temporary Access at Station 32 + 28.00 -L- will be paid under the lump sum price bid for the above work, or other methods of access, including all material, pipes, work bridge components, equipment, tools, labor, disposal, and incidentals necessary to complete the work.

Payment will be made under:

Pay Item	**Pay Unit**
Construction, Maintenance and Removal of Temporary Access at Sta. 32 + 28.00 -L-	Lump Sum

THERMAL SPRAYED COATINGS (METALLIZATION) (12-1-2017)

DESCRIPTION

Apply a thermal sprayed coating (TSC) and sealer to metal surfaces in accordance with the Thermal Sprayed Coatings (Metallization) Program and as specified herein when called for on the plans or by other Special Provisions. Use only Arc Sprayed application methods to apply TSC. The Engineer must approve other methods of application.

The Thermal Sprayed Coatings (Metallization) Program is available on the Materials and Tests Unit website.

QUALIFICATIONS

Only use NCDOT approved TSC Contractors meeting the requirements outlined in the Thermal Sprayed Coatings (Metallization) Program.

MATERIALS

Use only materials meeting the requirements of Section 7 of the Thermal Sprayed Coatings (Metallization) Program.

SURFACE PREPARATION AND TSC APPLICATION

Surface preparation of TSC surfaces shall meet the requirements of Section 8 of the Thermal Sprayed Coatings (Metallization) Program. Apply TSC with the alloy to the thickness specified on the plans or as required by Thermal Sprayed Coatings (Metallization) Program.

INSPECTION AND TESTING

The TSC Contractor must conduct inspections and tests listed in the Thermal Sprayed Coatings (Metallization) Program.

REPAIRS

Perform all shop repairs in accordance with the procedures outlined in the Thermal Sprayed Coatings (Metallization) Program.

Repairs associated with field welding shall be made by removing the existing metallizing by blast or power tool cleaning. Affected areas shall be addressed as follows:

- For Marine Environments, incorporate a minimum surface preparation in accordance with SSPC SP-11 (Power Tool Cleaning to Bare Metal) and require an approved epoxy mastic coating applied in accordance with the manufacturer's recommendation. Apply a minimum of two (2) coats at a rate of 5-7 (WFT) per coat to the affected area.

- For Non-Marine Environments, incorporate a minimum surface preparation in accordance with SSPC SP-11 (Power Tool Cleaning to Bare Metal) and require an approved organic zinc-rich coating applied in accordance with the manufacturer's recommendation. Apply a minimum of two (2) coats at a rate of 5-7 (WFT) per coat to the affected area.

    1. Minor localized areas less than or equal to 0.1 ft^2 with exposed substrate shall be repaired as outlined above for marine and non-marine environments.

    2. Large localized areas greater than 0.1 ft^2 with exposed substrate shall require the Contractor to submit a detailed repair procedure to the Engineer for review and approval.

- Repair methods for areas where the substrate has not been exposed shall be mutually agreed upon between the Contractor and TSC Contractor as approved by the Engineer.

TWELVE MONTH OBSERVATION PERIOD

All TSC materials applied under the Thermal Sprayed Coatings (Metallization) Program shall be evaluated twelve (12) months after project acceptance for defective materials and workmanship.

BASIS OF PAYMENT

The contract price bid for the metal component to which the TSC is applied will be full compensation for the thermal sprayed coating.

EXPANSION JOINT SEALS (9-30-11)

GENERAL

The work covered by this Special Provision consists of furnishing and installing the expansion joint seals as shown on the contract drawings. All materials, labor, equipment and incidentals necessary for the proper installation of the expansion joint seals are included.

MATERIAL

Provide expansion joint seals capable of accommodating a total movement measured parallel to the centerline of the roadway as shown on plans.

Provide an elastomeric component for each expansion joint seal that is a continuous unit for the entire length of the joint. Do not field splice the elastomeric component. Only vulcanized shop splicing of the elastomeric component is permitted. The minimum length of an elastomeric component before shop splicing is 20 feet. However, one piece shorter than 20 feet is permitted. Provide an elastomeric component that is clearly shop marked to indicate the top side and joint location of the elastomeric component. On skewed bridges, or under unsymmetrical conditions, clearly mark the left side of the elastomeric component. Left is defined as being on the left when facing in the direction of increasing station. Inspect the seals upon receipt to ensure that the marks are clearly visible upon installation.

Make sure the convolution of the gland does not project above the top of the hold-down plates when the joint opening is in the most compressed condition. Use either elastic polychloroprene (neoprene) or ethyl propylene diene monomer (EPDM) for the elastomer that meets the following minimum properties:

	ASTM TEST METHOD	REQUIREMENTS
Hardness, Durometer - Shore A	D2240	60 ± 5, Neoprene (upward corrugated shape - fabric reinforced) 75 ± 5, EPDM and Neoprene (upward non-corrugated shape) 80 ± 5, EPDM (upward corrugated shape-fabric reinforced)
Tensile Strength	D412	2000 psi (min.)
Elongation at Break	D412	250% (min.)
Width of Gland in Relaxed Condition	N/A	10" ± 0.25"

Thickness of Upturned portion of gland	N/A	0.25" non-corrugated shape, -0.032" to +0.032"
Thickness of Upturned portion of gland	N/A	0.1875" corrugated shape, -0.032" to +0.032"
Thickness of Flat portion of gland	N/A	0.1563", -0.032" to +0.032"

For fabric reinforced glands, submit one unreinforced sample per lot number, up to 500 feet of Expansion Joint Seal, to the Engineer for testing.

Only field splice hold-down plates at crown points, at abrupt changes in the deck slab cross slope, and on lane lines. Splicing within travel lanes is not permitted and splicing on edge lines is not required. Field splice hold-down plates between the edge line and gutter upturn and where necessary for proper installation and alignment is permitted. Show all splice locations on the working drawings for approval. For the location of lane markings at the expansion joint seal, see the Structure plans. At the splice locations, locate the hold-down bolts three (3) inches from the end of the hold-down plate. At splice locations where changes in deck slab cross slope occur, cut the ends of hold-down plates parallel to the bridge centerline for skews less than 80° and greater than 100°.

Do not use welded shop splices in hold-down plates.

SHOP DRAWINGS

Submit nine (9) sets of working drawings to the Engineer for review, comments and acceptance. Show complete details drawn to scale and include:

(A) The proposed template details including the makeup of the template

(B) The proposed method of holding the base angle assembly in place while concrete is cast around it

(C) The proposed procedure to correct for the effects of beam movement and rotation when setting width of joint opening

(D) The proposed chronology of installation including the sequence and direction of the concrete casting

(E) The details of cross connectors between base angles, such as steel bars with slots bolted to angles, to maintain evenness between the adjacent base angles while accommodating movement that occurs when concrete is cast. Indicate when bolts are loosened to allow movement.

(F) The proposed method for removing the hold-down plate

(G) A section detail through the joint showing horizontal offset dimensions of the base angles from the centerline joint. This detail is required when the vertical face of the joint opening is not perpendicular to the roadway surface (e.g. when the roadway grade is significant).

Have someone other than the one who prepares the drawing check all detailed drawings and include the signatures of both the drafter and checker on each sheet of the drawings. The Engineer returns unchecked drawings to the Contractor. Provide all completed drawings well in advance of the scheduled installation time for the expansion joint seal.

INSTALLATION

Provide supports for the base angle assembly at a maximum spacing of 9 feet. Place supports near field splices of base angles to ensure that field splices are straight and even. Provide base angles with ½" diameter weep holes at 12 inch centers to allow bleeding of trapped air and/or water. Do not obstruct the weep holes with falsework. Make the bottom of the trough parallel to grade and the sides parallel to the sides of the expansion joint seal.

For damaged areas, depressions, spalls, cracks, or irregularities of curbs or decks adjacent to the expansion joint, submit a proposed method of repair and repair material specifications for approval.

If the Engineer deems any aspects of the expansion joint seals unacceptable, make necessary corrections.

INSPECTION

When concrete is cast, use a non-aluminum, 10 foot, true to line straight edge to check and grade the top of the slab on each side of the joint to ensure smooth transition between spans.

(A) Watertight Integrity Test

(1) Upon completion of an expansion joint seal, perform a water test on the top surface to detect any leakage. Cover the roadway section of the joint from curb to curb, or barrier rail to barrier rail, with water, either ponded or flowing, not less than 1 inch above the roadway surface at all points. Block sidewalk sections and secure an unnozzled water hose delivering approximately 1 gallon of water per minute to the inside face of the bridge railing, trained in a downward position about 6 inches above the sidewalks, such that there is continuous flow of water across the sidewalk and down the curb face of the joint.

(2) Maintain the ponding or flowing of water on the roadway and continuous flow across sidewalks and curbs for a period of 5 hours. At the conclusion of the test, the underside of the joint is closely examined for leakage. The expansion joint seal is considered watertight if no obvious wetness is visible on the Engineer's finger after touching a number of underdeck areas. Damp concrete that does not impart wetness to the finger is not a sign of leakage.

(3) If the joint system leaks, locate the place(s) of leakage and take any repair measures necessary to stop the leakage at no additional cost to the Department. Use repair measures recommended by the manufacturer and approved by the Engineer prior to beginning corrective work.

(4) If measures to eliminate leakage are taken, perform a subsequent water integrity test subject to the same conditions as the original test. Subsequent tests carry the same responsibility as the original test and are performed at no extra cost to the Department.

MEASUREMENT AND PAYMENT

Expansion Joint Seals will be paid for at the lump sum contract price. Payment will be full compensation for furnishing all material, including any steel accessory plates for sidewalks, medians and rails, labor, tools, and incidentals necessary for installing the expansion joint seal in place and including all materials, labor, tools and incidentals for performing the original watertight integrity test.

Payment will be made under:

Pay Item	**Pay Unit**
Expansion Joint Seals	Lump Sum

SECURING OF VESSELS (10-12-01)

GENERAL

Secure vessels in accordance with Section 107 of the *Standard Specifications* and the following provision.

When utilizing barges, tugboats or other vessels, take all necessary precautions to ensure that such vessels are securely anchored or moored when not in active operation. Take all necessary measures to ensure that the vessels are operated in a manner that avoids damage to or unnecessary contact with bridges and other highway structures and attachments. If severe weather conditions are anticipated or should be anticipated through reasonable monitoring of weather forecasts, take additional measures to protect bridges and other highway structures and attachments from extreme conditions. The Contractor is strictly liable for damages to any bridge or other highway structures or attachments caused by a vessel owned or controlled by the Contractor. The Contractor is also liable to third parties for property damages and loss of revenue caused by vessels under the Contractor's control.

MEASUREMENT AND PAYMENT

No separate payment will be made for *Securing of Vessels*.

FALSEWORK AND FORMWORK (11-30-23)

GENERAL

Use this Special Provision as a guide to develop temporary works submittals required by the *Standard Specifications* or other provisions; no additional submittals are required herein. Such temporary works include, but are not limited to, falsework and formwork.

Falsework is any temporary construction used to support the permanent structure until it becomes self-supporting. Formwork is the temporary structure or mold used to retain plastic or fluid concrete in its designated shape until it hardens. Access scaffolding is a temporary structure that functions as a work platform that supports construction personnel, materials, and tools, but is not intended to support the structure. Scaffolding systems that are used to temporarily support permanent structures (as opposed to functioning as work platforms) are considered to be falsework under the definitions given. Shoring is a component of falsework such as horizontal, vertical, or inclined support members. Where the term "temporary works" is used, it includes all of the temporary facilities used in bridge construction that do not become part of the permanent structure.

Design and construct safe and adequate temporary works that will support all loads imposed and provide the necessary rigidity to achieve the lines and grades shown on the plans in the final structure.

MATERIALS

Select materials suitable for temporary works; however, select materials that also ensure the safety and quality required by the design assumptions. The Engineer has authority to reject material on the basis of its condition, inappropriate use, safety, or nonconformance with the plans. Clearly identify allowable loads or stresses for all materials or manufactured devices on the plans. Revise the plan and notify the Engineer if any change to materials or material strengths is required.

DESIGN REQUIREMENTS

(A) Working Drawings

Provide working drawings for items as specified in the contract, or as required by the Engineer, with design calculations and supporting data in sufficient detail to permit a structural and safety review of the proposed design of the temporary work.

On the drawings, show all information necessary to allow the design of any component to be checked independently as determined by the Engineer.

When concrete placement is involved, include data such as the drawings of proposed sequence, rate of placement, direction of placement, and location of all construction joints.

When required, have the drawings and calculations prepared under the guidance of, and sealed by, a North Carolina Registered Professional Engineer who is knowledgeable in temporary works design.

If requested by the Engineer, submit with the working drawings manufacturer's catalog data listing the weight of all construction equipment that will be supported on the temporary work. Show anticipated total settlements and/or deflections of falsework and forms on the working drawings. Include falsework footing settlements, joint take-up, and deflection of beams or girders.

As an option for the Contractor, overhang falsework hangers may be uniformly spaced, at a maximum of 36 inches, provided the following conditions are met:

Member Type (PCG)	Member Depth, (inches)	Max. Overhang Width, (inches)	Max. Slab Edge Thickness, (inches)	Max. Screed Wheel Weight, (lbs.)	Bracket Min. Vertical Leg Extension, (inches)
II	36	39	14	2000	26
III	45	42	14	2000	35
IV	54	45	14	2000	44
MBT	63	51	12	2000	50
MBT	72	55	12	1700	48

Overhang width is measured from the centerline of the girder to the edge of the deck slab. For Type II, III & IV prestressed concrete girders (PCG), 45-degree cast-in-place half hangers and rods must have a minimum safe working load of 6,000 lbs.

For MBT prestressed concrete girders, 45-degree angle holes for falsework hanger rods shall be cast through the girder top flange and located, measuring along the top of the member, 1'-2 ½" from the edge of the top flange. Hanger hardware and rods must have a minimum safe working load of 6,000 lbs.

For link slabs, the top of girders directly beneath the link slab shall be free of overhang falsework attachments or other hardware. Submit calculations and working drawings for overhang falsework in the link slab region.

The overhang bracket provided for the diagonal leg shall have a minimum safe working load of 3,750 lbs. The vertical leg of the bracket shall extend to the point that the heel bears on the girder bottom flange, no closer than 4 inches from the bottom of the member. However, for 72-inch members, the heel of the bracket shall bear on the web, near the bottom flange transition.

Provide adequate overhang falsework and determine the appropriate adjustments for deck geometry, equipment, casting procedures and casting conditions.

If the optional overhang falsework spacing is used, indicate this on the falsework submittal and advise the girder producer of the proposed details. Failure to notify the Engineer of hanger type and hanger spacing on prestressed concrete girder casting drawings may delay the approval of those drawings.

Falsework hangers that support concentrated loads and are installed at the edge of thin top flange concrete girders (such as bulb tee girders) shall be spaced so as not to exceed 75% of the manufacturer's stated safe working load. Use of dual leg hangers (such as Meadow Burke HF-42 and HF-43) are not allowed on concrete girders with thin top flanges. Design the falsework and forms supporting deck slabs and overhangs on girder bridges so that there will be no differential settlement between the girders and the deck forms during placement of deck concrete.

When staged construction of the bridge deck is required, detail falsework and forms for screed and fluid concrete loads to be independent of any previous deck pour components when the mid-span girder deflection due to deck weight is greater than ¾".

Note on the working drawings any anchorages, connectors, inserts, steel sleeves or other such devices used as part of the falsework or formwork that remains in the permanent structure. If the plan notes indicate that the structure contains the necessary corrosion protection required for a Corrosive Site, epoxy coat, galvanize or metalize these devices. Electroplating will not be allowed. Any coating required by the Engineer will be considered incidental to the various pay items requiring temporary works.

Design falsework and formwork requiring submittals in accordance with the current edition of AASHTO *Guide Design Specifications for Bridge Temporary Works* except as noted herein.

(1) Wind Loads

Table 2.2 of Article 2.2.5.1 is modified to include wind velocities up to 110 mph. In addition, Table 2.2A is included to provide the maximum wind speeds by county in North Carolina.

Table 2.2 - Wind Pressure Values

Height Zone	Pressure, lb/ft^2 for Indicated Wind Velocity, mph				
feet above ground	70	80	90	100	110
0 to 30	15	20	25	30	35
30 to 50	20	25	30	35	40
50 to 100	25	30	35	40	45
over 100	30	35	40	45	50

(2) Time of Removal

The following requirements replace those of Article 3.4.8.2.

Do not remove forms until the concrete has attained strengths required in Article 420-16 of the *Standard Specifications* and these Special Provisions.

Do not remove forms until the concrete has sufficient strength to prevent surface damage.

Table 2.2A - Steady State Maximum Wind Speeds by Counties in North Carolina

COUNTY	25 YR (mph)	COUNTY	25 YR (mph)	COUNTY	25 YR (mph)
Alamance	70	Franklin	70	Pamlico	100
Alexander	70	Gaston	70	Pasquotank	100
Alleghany	70	Gates	90	Pender	100
Anson	70	Graham	80	Perquimans	100
Ashe	70	Granville	70	Person	70
Avery	70	Greene	80	Pitt	90
Beaufort	100	Guilford	70	Polk	80
Bertie	90	Halifax	80	Randolph	70
Bladen	90	Harnett	70	Richmond	70
Brunswick	100	Haywood	80	Robeson	80
Buncombe	80	Henderson	80	Rockingham	70
Burke	70	Hertford	90	Rowan	70
Cabarrus	70	Hoke	70	Rutherford	70
Caldwell	70	Hyde	110	Sampson	90
Camden	100	Iredell	70	Scotland	70
Carteret	110	Jackson	80	Stanley	70
Caswell	70	Johnston	80	Stokes	70
Catawba	70	Jones	100	Surry	70
Cherokee	80	Lee	70	Swain	80
Chatham	70	Lenoir	90	Transylvania	80
Chowan	90	Lincoln	70	Tyrell	100
Clay	80	Macon	80	Union	70
Cleveland	70	Madison	80	Vance	70
Columbus	90	Martin	90	Wake	70
Craven	100	McDowell	70	Warren	70
Cumberland	80	Mecklenburg	70	Washington	100
Currituck	100	Mitchell	70	Watauga	70
Dare	110	Montgomery	70	Wayne	80
Davidson	70	Moore	70	Wilkes	70
Davie	70	Nash	80	Wilson	80
Duplin	90	New Hanover	100	Yadkin	70
Durham	70	Northampton	80	Yancey	70
Edgecombe	80	Onslow	100		
Forsyth	70	Orange	70		

(B) Review and Approval

The Engineer is responsible for the review and approval of temporary works' drawings.

Submit the working drawings sufficiently in advance of proposed use to allow for their review, revision (if needed), and approval without delay to the work.

The time period for review of the working drawings does not begin until complete drawings and design calculations, when required, are received by the Engineer.

Do not start construction of any temporary work for which working drawings are required until the drawings have been approved. Such approval does not relieve the Contractor of the responsibility for the accuracy and adequacy of the working drawings.

CONSTRUCTION REQUIREMENTS

All requirements of Section 420 of the *Standard Specifications* apply.

Construct temporary works in conformance with the approved working drawings. Ensure that the quality of materials and workmanship employed is consistent with that assumed in the design of the temporary works. Do not weld falsework members to any portion of the permanent structure unless approved. Show any welding to the permanent structure on the approved construction drawings.

Provide tell-tales attached to the forms and extending to the ground, or other means, for accurate measurement of falsework settlement. Make sure that the anticipated compressive settlement and/or deflection of falsework does not exceed 1 inch. For cast-in-place concrete structures, make sure that the calculated deflection of falsework flexural members does not exceed 1/240 of their span regardless of whether or not the deflection is compensated by camber strips.

(A) Maintenance and Inspection

Inspect and maintain the temporary work in an acceptable condition throughout the period of its use. Certify that the manufactured devices have been maintained in a condition to allow them to safely carry their rated loads. Clearly mark each piece so that its capacity can be readily determined at the job site.

Perform an in-depth inspection of an applicable portion(s) of the temporary works, in the presence of the Engineer, not more than 24 hours prior to the beginning of each concrete placement. Inspect other temporary works at least once a month to ensure that they are functioning properly. Have a North Carolina Registered Professional Engineer inspect the cofferdams, shoring, sheathing, support of excavation structures, and support systems for load tests prior to loading.

(B) Foundations

Determine the safe bearing capacity of the foundation material on which the supports for temporary works rest. If required by the Engineer, conduct load tests to verify proposed bearing capacity values that are marginal or in other high-risk situations.

The use of the foundation support values shown on the contract plans of the permanent structure is permitted if the foundations are on the same level and on the same soil as those of the permanent structure.

Allow for adequate site drainage or soil protection to prevent soil saturation and washout of the soil supporting the temporary works supports.

If piles are used, the estimation of capacities and later confirmation during construction using standard procedures based on the driving characteristics of the pile is permitted. If preferred, use load tests to confirm the estimated capacities; or, if required by the Engineer conduct load tests to verify bearing capacity values that are marginal or in other high risk situations.

The Engineer reviews and approves the proposed pile and soil bearing capacities.

REMOVAL

Unless otherwise permitted, remove and keep all temporary works upon completion of the work. Do not disturb or otherwise damage the finished work.

Remove temporary works in conformance with the contract documents. Remove them in such a manner as to permit the structure to uniformly and gradually take the stresses due to its own weight.

MEASUREMENT AND PAYMENT

Unless otherwise specified, *Falsework and Formwork* will not be directly measured.

Payment at the contract unit prices for the various pay items requiring temporary works will be full compensation for the above falsework and formwork.

SUBMITTAL OF WORKING DRAWINGS (1-31-25)

GENERAL

Submit working drawings in accordance with Article 105-2 of the *Standard Specifications* and this Special Provision. For this Special Provision, “submittals” refers to only those listed in this Special Provision. The list of submittals contained herein does not represent a list of required submittals for the project. Submittals are only necessary for those items as required by the contract. Make submittals that are not specifically noted in this provision directly to the Engineer. Either the Structures Management Unit or the Geotechnical Engineering Unit or both units will jointly review submittals.

If a submittal contains variations from plan details or specifications or significantly affects project cost, field construction or operations, discuss the submittal with and submit all copies to the Engineer. State the reason for the proposed variation in the submittal. To minimize review time, make sure all submittals are complete when initially submitted. Provide a contact name and information with each submittal. Direct any questions regarding submittal requirements to the Engineer, Structures Management Unit contacts or the Geotechnical Engineering Unit contacts noted below.

To facilitate in-plant inspection by NCDOT and approval of working drawings, provide the name, address and telephone number of the facility where fabrication will actually be done if different than shown on the title block of the submitted working drawings. This includes, but is not limited to, precast concrete items, prestressed concrete items and fabricated steel or aluminum items.

ADDRESSES AND CONTACTS

For submittals to the Structures Management Unit, use the following addresses:

Via Email: SMU-wdr@ncdot.gov (do not cc SMU Working Drawings staff)

Via US mail:

Mr. D. N. Snoke, P. E.
State Structures Engineer
North Carolina Department
of Transportation
Structures Management Unit
1581 Mail Service Center
Raleigh, NC 27699-1581

Attention: Mr. J. L. Bolden, P. E.

Via other delivery service:

Mr. D. N. Snoke, P. E.
State Structures Engineer
North Carolina Department
of Transportation
Structures Management Unit
1000 Birch Ridge Drive
Raleigh, NC 27610

Attention: Mr. J. L. Bolden, P. E.

For submittals to the Geotechnical Engineering Unit, use the following addresses:

For projects in Divisions 1-7 (Eastern Regional Office):

Via Email: EastGeotechnicalSubmittal@ncdot.gov

Via US mail:

Mr. Thomas Santee, P. E.
Assistant State Geotechnical
Engineer – Eastern Region
North Carolina Department
of Transportation
Geotechnical Engineering Unit
Eastern Regional Office
1570 Mail Service Center
Raleigh, NC 27699-1570

Via other delivery service:

Mr. Thomas Santee, P. E.
Assistant State Geotechnical
Engineer – Eastern Region
North Carolina Department
of Transportation
Geotechnical Engineering Unit
Eastern Regional Office
3301 Jones Sausage Road, Suite 100
Garner, NC 27529

For projects in Divisions 8-14 (Western Regional Office):

Via Email: WestGeotechnicalSubmittal@ncdot.gov

Via US mail or other delivery service:

Mr. Eric Williams, P. E.
Assistant State Geotechnical
Engineer – Western Region
North Carolina Department
of Transportation
Geotechnical Engineering Unit
Western Regional Office
5253 Z Max Boulevard
Harrisburg, NC 28075

The status of the review of structure-related submittals sent to the Structures Management Unit can be viewed from the Unit's website, via the "Drawing Submittal Status" link.

The status of the review of geotechnical-related submittals sent to the Geotechnical Engineering Unit can be viewed from the Unit's website, via the "Geotechnical Construction Submittals" link.

Direct any questions concerning submittal review status, review comments or drawing markups to the following contacts:

Primary Structures Contact: James Bolden (919) 707 – 6408
jlbolden@ncdot.gov

Secondary Structures Contacts: Madonna Rorie (919) 707 – 6508
mlrorie@ncdot.gov

Eastern Regional Geotechnical Contact (Divisions 1-7):
Thomas Santee (984) 920-8901
EastGeotechnicalSubmittal@ncdot.gov

Western Regional Geotechnical Contact (Divisions 8-14):
Eric Williams (980)258-6400
WestGeotechnicalSubmittal@ncdot.gov

SUBMITTAL COPIES

Furnish one complete copy of each submittal, including all attachments, to the Engineer. At the same time, submit a copy of the same complete submittal directly to the Structures Management Unit and/or the Geotechnical Engineering Unit as specified in the tables below.

The first table below covers "Structure Submittals." The Engineer will receive review comments and drawing markups for these submittals from the Structures Management Unit. The second table

in this section covers "Geotechnical Submittals." The Engineer will receive review comments and drawing markups for these submittals from the Geotechnical Engineering Unit.

Unless otherwise required, submit one set of supporting calculations to either the Structures Management Unit or the Geotechnical Engineering Unit unless both units require submittal copies in which case submit a set of supporting calculations to each unit. Provide additional copies of any submittal as directed.

STRUCTURE SUBMITTALS

Submittal	Submittal Required by Structures Management Unit?	Submittal Required by Geotechnical Engineering Unit?	Contract Reference Requiring Submittal [1]
Arch Culvert Falsework	Y	N	Plan Note, SN Sheet & "Falsework and Formwork"
Box Culvert Falsework [7]	Y	N	Plan Note, SN Sheet & "Falsework and Formwork"
Cofferdams	Y	Y	Article 410-4
Foam Joint Seals [6]	Y	N	"Foam Joint Seals"
Expansion Joint Seals (hold down plate type with base angle)	Y	N	"Expansion Joint Seals"
Expansion Joint Seals (modular)	Y	N	"Modular Expansion Joint Seals"
Expansion Joint Seals (strip seals)	Y	N	"Strip Seal Expansion Joints"
Falsework & Forms [2] (substructure)	Y	N	Article 420-3 & "Falsework and Formwork"
Falsework & Forms (superstructure)	Y	N	Article 420-3 & "Falsework and Formwork"
Girder Erection over Railroad	Y	N	Railroad Provisions
Maintenance and Protection of Traffic Beneath Proposed Structure	Y	N	"Maintenance and Protection of Traffic Beneath Proposed Structure at Station ___"

Metal Bridge Railing	Y	N	Plan Note
Metal Stay-in-Place Forms	Y	N	Article 420-3
Metalwork for Elastomeric Bearings [4,5]	Y	N	Article 1072-8
Miscellaneous Metalwork [4,5]	Y	N	Article 1072-8
Disc Bearings [4]	Y	N	"Disc Bearings"
Overhead and Digital Message Signs (DMS) (metalwork and foundations)	Y	N	Applicable Provisions
Placement of Equipment on Structures (cranes, etc.)	Y	N	Article 420-20
Prestressed Concrete Box Beam (detensioning sequences) [3]	Y	N	Article 1078-11
Precast Concrete Box Culverts	Y	N	"Optional Precast Reinforced Concrete Box Culvert at Station ___"
Prestressed Concrete Cored Slab (detensioning sequences) [3]	Y	N	Article 1078-11
Prestressed Concrete Deck Panels	Y	N	Article 420-3
Prestressed Concrete Girder (strand elongation and detensioning sequences)	Y	N	Articles 1078-8 and 1078-11
Removal of Existing Structure over Railroad	Y	N	Railroad Provisions
Revised Bridge Deck Plans (adaptation to prestressed deck panels)	Y	N	Article 420-3
Revised Bridge Deck Plans (adaptation to modular expansion joint seals)	Y	N	"Modular Expansion Joint Seals"
Sound Barrier Wall (precast items)	Y	N	Article 1077-2 & "Sound Barrier Wall"
Sound Barrier Wall Steel Fabrication Plans [5]	Y	N	Article 1072-8 & "Sound Barrier Wall"
Structural Steel [4]	Y	N	Article 1072-8

Temporary Detour Structures	Y	Y	Article 400-3 & "Construction, Maintenance and Removal of Temporary Structure at Station ____"
TFE Expansion Bearings [4]	Y	N	Article 1072-8

FOOTNOTES

1. References are provided to help locate the part of the contract where the submittals are required. References in quotes refer to the provision by that name. Articles refer to the *Standard Specifications*.
2. Submittals for these items are necessary only when required by a note on plans.
3. Submittals for these items may not be required. A list of pre-approved sequences is available from the producer or the Materials & Tests Unit.
4. The fabricator may submit these items directly to the Structures Management Unit.
5. The two sets of preliminary submittals required by Article 1072-8 of the *Standard Specifications* are not required for these items.
6. Submittals for Fabrication Drawings are not required. Submittals for Catalogue Cuts of Proposed Material are required. See Section 5.A of the referenced provision.
7. Submittals are necessary only when the top slab thickness is 18" or greater.

GEOTECHNICAL SUBMITTALS

Submittal	Submittals Required by Geotechnical Engineering Unit	Submittals Required by Structures Management Unit	Contract Reference Requiring Submittal [1]
Drilled Pier Construction Plans [2]	Y	N	Subarticle 411-3(A)
Crosshole Sonic Logging (CSL) Reports [2]	Y	N	Subarticle 411-5(A)(2)

Pile Driving Equipment Data Forms [2,3]	Y	N	Subarticle 450-3(D)(2)
Pile Driving Analyzer (PDA) Reports [2]	Y	N	Subarticle 450-3(F)(3)
Retaining Walls [4]	Y; drawings and calculations	Y; drawings	Applicable Provisions
Temporary Shoring [4]	Y; drawings and calculations	Y; drawings	"Temporary Shoring" & "Temporary Soil Nail Walls"

FOOTNOTES

1. References are provided to help locate the part of the contract where the submittals are required. References in quotes refer to the provision by that name. Subarticles refer to the *Standard Specifications*.

2. Submit one hard copy of submittal to the Engineer. Submit a second copy of submittal electronically (PDF via email), US mail or other delivery service to the appropriate Geotechnical Engineering Unit regional office. Electronic submission is preferred.

3. The Pile Driving Equipment Data Form is available from:
https://connect.ncdot.gov/projects/construction/ConstManRefDocs/PILE%20DRIVING%20EQUIPMENT%20DATA%20FORM.pdf
See second page of form for submittal instructions.

4. Electronic copy of submittal is required. See referenced provision.

CRANE SAFETY **(11-30-23)**

Comply with the manufacturer specifications and limitations applicable to the operation of any and all cranes and derricks. Prime contractors, sub-contractors, and fully operated rental companies shall comply with the current Occupational Safety and Health Administration (OSHA) regulations.

Submit all items listed below to the Engineer prior to beginning crane operations. Changes in personnel or equipment must be reported to the Engineer and all applicable items listed below must be updated and submitted prior to continuing with crane operations.

CRANE SAFETY SUBMITTAL LIST

A. **Competent Person:** Provide the name and qualifications of the "Competent Person" responsible for crane safety and lifting operations. The named competent person will have the responsibility and authority to stop any work activity due to safety concerns.

B. **Riggers:** Provide the qualifications and experience of the persons responsible for rigging operations. Qualifications and experience should include, but not be limited to, weight calculations, center of gravity determinations, selection and inspection of sling and rigging equipment, and safe rigging practices.

C. **Crane Inspections:** Inspection records for all cranes shall be current and readily accessible for review upon request.

D. **Certifications:** Crane operators shall be certified by the National Commission for the Certification of Crane Operators (NCCCO) or the National Center for Construction Education and Research (NCCER). Other approved nationally accredited programs will be considered upon request. In addition, crane operators shall have a current CDL medical card. Submit a list of crane operator(s) and include current certification for each type of crane operated (small hydraulic, large hydraulic, small lattice, large lattice) and medical evaluations for each operator.

MEASUREMENT AND PAYMENT

No direct payment will be made for Crane Safety. All costs shall be considered incidental to items for which direct payment is made.

GROUT FOR STRUCTURES (12-01-17)

GENERAL

This Special Provision addresses grout for use in pile blockouts, grout pockets, shear keys, dowel holes and recesses for structures. This Special Provision does not apply to grout placed in post-tensioning ducts for bridge beams, girders, decks, end bent caps, or bent caps. Mix and place grout in accordance with the manufacturer's recommendations, the applicable sections of the *Standard Specifications* and this Special Provision.

MATERIAL REQUIREMENT

Unless otherwise noted on the plans, use a Type 3 Grout in accordance with Section 1003 of the *Standard Specifications*.

Initial setting time shall not be less than 10 minutes when tested in accordance with ASTM C266.

Construction loading and traffic loading shall not be allowed until the 3-day compressive strength is achieved.

SAMPLING AND PLACEMENT

Place and maintain components in final position until grout placement is complete and accepted. Concrete surfaces to receive grout shall be free of defective concrete, laitance, oil, grease, and other foreign matter. Saturate concrete surfaces with clean water and remove excess water prior to placing grout.

MEASUREMENT AND PAYMENT

No separate payment will be made for *Grout for Structures*. The cost of the material, equipment, labor, placement, and any incidentals necessary to complete the work shall be considered incidental to the structure item requiring grout.

ASBESTOS ASSESSMENT (11-30-23)

INSPECTION FOR ASBESTOS CONTAINING MATERIAL

Prior to conducting bridge demolition or renovation activities, the Contractor shall thoroughly inspect the bridge or affected components for the presence of asbestos containing material (ACM) using a firm prequalified by NCDOT to perform asbestos surveys. The inspection must be performed by a N.C. accredited asbestos inspector with experience inspecting bridges or other industrial structures. The N.C. accredited asbestos inspector must conduct a thorough inspection, identifying all asbestos-containing material as required by the Environmental Protection Agency National Emission Standards for Hazardous Air Pollutants (NESHAP) Code of Federal Regulations (CFR) 40 CFR, Part 61, Subpart M.

The Contractor shall submit an inspection report to the Engineer, which at a minimum must include information required in 40 CFR 763.85 (a)(4) vi)(A)-(E), as well as a project location map, photos of existing structure, the date of inspection and the name, N.C. accreditation number, and signature of the N.C. accredited asbestos inspector who performed the inspection and completed the report. The cover sheet of the report shall include project identification information. Place the following notes on the cover sheet of the report and check the appropriate box:

___ ACM was found
___ ACM was not found

REMOVAL AND DISPOSAL OF ASBESTOS CONTAINING MATERIAL

If ACM is found, notify the Engineer. Compensation for removal and disposal of ACM is considered extra work in accordance with Article 104-7 of the *Standard Specifications*.

An Asbestos Removal Permit must be obtained from the Health Hazards Control Unit (HHCU) of the N.C. Department of Health & Human Services, Division of Public Health, if more than 35 cubic feet, 160 square feet, or 260 linear feet of regulated ACM (RACM) is to be removed from a structure and this work must be completed by a contractor prequalified by NCDOT to perform asbestos abatement. RACM is defined in 40 CFR, Part 61, Subpart M. Note: 40 CFR

763.85 (a)(4) vi)(D) defines ACM as surfacing, TSI and Miscellaneous which does not meet the NESHAP RACM.

DEMOLITION NOTIFICATION

Even if no ACM is found (or if quantities are less than those required for a permit), a Demolition Notification (DHHS-3768) must be submitted to the HHCU. Notifications and Asbestos Permit applications require an original signature and must be submitted to the HHCU 10 working days prior to beginning demolition activities. The 10 working day period starts based on the post-marked date or date of hand delivery. Demolition that does not begin as originally notified requires submission of a separate revision form HHCU 3768-R to HHCU. Reference the North Carolina Administrative Code, Chapter 10A, Subchapter 41C, Article .0605 for directives on revision submissions.

Contact Information
Health Hazards Control Unit (HHCU)
N.C. Department of Health and Human Services
1912 Mail Service Center
Raleigh, NC 27699-1912
Telephone: (919) 707-5950
Fax: (919) 870-4808

SPECIAL CONSIDERATIONS

Buncombe, Forsyth, and Mecklenburg counties also have asbestos permitting and NESHAP requirements must be followed. For projects involving permitted RACM removals, both the applicable county and the state (HHCU) must be notified.

For demolitions with no RACM, only the local environmental agencies must be notified. Contact information is as follows:

Buncombe County
WNC Regional Air Pollution Control Agency
49 Mt. Carmel Road
Asheville, NC 28806
(828) 250-6777

Forsyth County
Environmental Affairs Department
537 N. Spruce Street
Winston-Salem, NC 27101
(336) 703-2440

Mecklenburg County
Land Use and Environmental Services Agency
Mecklenburg Air Quality
700 N. Tryon Street

Charlotte, NC 28202
(704) 336-5430

ADDITIONAL INFORMATION

Additional information may be found on N.C. asbestos rules, regulations, procedures, and N.C. accredited inspectors, as well as associated forms for demolition notifications and asbestos permit applications at the N.C. Asbestos Hazard Management Program website:

https://epi.dph.ncdhhs.gov/asbestos/ahmp.html

MEASUREMENT AND PAYMENT

Asbestos Assessment Payment will be paid at the lump sum contract unit price and will be full compensation for all asbestos inspections, reports, permitting and notifications.
Payment will be made under:

Pay Item	Pay Unit
Asbestos Assessment	Lump Sum