STATE OF NORTH CAROLINA
DIVISION OF HIGHWAYS

TRANSPORTATION MANAGEMENT PLAN

YADKIN/SURRY COUNTIES

VICINITY MAP

LOCATION: BRIDGE #06 OVER YADKIN RIVER, NORFOLK SOUTHERN RAILROAD, AND NC 268 ON I-77 NBL
TYPE OF WORK: GRADING, DRAINAGE, PAVING, & STRUCTURE

INDEX OF SHEETS

SHEET NO.	TITLE
TMP-1	TITLE SHEET, VICINITY MAP, AND INDEX OF SHEETS
TMP-1A	LIST OF APPLICABLE ROADWAY STANDARD DRAWINGS, AND LEGEND
TMP-1B	TRANSPORTATION OPERATIONS PLAN: (MANAGEMENT STRATEGIES, GENERAL NOTES, AND LOCAL NOTES)
TMP-2	PORTABLE CONCRETE BARRIER AT TEMPORARY SHORING LOCATIONS
TMP-2A	TEMPORARY SHORING DATA
TMP-3 THRU TMP-3A	TEMPORARY TRAFFIC CONTROL PHASING
TMP-4 THRU TMP-7	TEMPORARY TRAFFIC CONTROL PHASE IA DETAILS
TMP-8 THRU TMP-11A	TEMPORARY TRAFFIC CONTROL PHASE IB DETAILS
TMP-12 THRU TMP-15	TEMPORARY TRAFFIC CONTROL PHASE II DETAILS
TMP-16	OFF-SITE DETOUR MAP

SHEET NO.
TMP-1

B-5831

TIP PROJECT:

DOCUMENT NOT CONSIDERED FINAL
UNLESS ALL SIGNATURES COMPLETED

WORK ZONE SAFETY & MOBILITY
"from the MOUNTAINS to the COAST"

PLANS PREPARED BY:

D. REED DUDLEY, E.I.

NCDOT CONTACTS:

ZACHARY T. CLARK, P.E.
PROJECT ENGINEER

SAROJ NAPIT, P.E.
PROJECT DESIGN ENGINEER

DIVISION OF HIGHWAYS
STATE OF NORTH CAROLINA
DEPARTMENT OF TRANSPORTATION
WORK ZONE TRAFFIC CONTROL

APPROVED: DocuSigned by: Zachary T Clark 9C4DA7E1F6D420...

DATE: 10/07/2025

SEAL

NORTH CAROLINA PROFESSIONAL SEAL 045090 ENGINEER ZACHARY T. CLARK

10/7/2025
P:\TIPProjects-B\B583\Traffic\TrafficControl\TCP\B-5831_TC_TMP_01_TitleSheet.dgn
User:drdudley

PROJ. REFERENCE NO.	SHEET NO.
B-5831	TMP-1A

ROADWAY STANDARD DRAWINGS

THE FOLLOWING ROADWAY STANDARDS AS SHOWN IN "ROADWAY STANDARD DRAWINGS" - N.C. DEPARTMENT OF TRANSPORTATION - RALEIGH, N.C., DATED JANUARY 2024 ARE APPLICABLE TO THIS PROJECT AND BY REFERENCE HEREBY ARE CONSIDERED A PART OF THESE PLANS:

STD. NO.	TITLE
1101.01	WORK ZONE ADVANCE WARNING SIGNS
1101.02	TEMPORARY LANE CLOSURES
1101.03	TEMPORARY ROAD CLOSURES
1101.04	TEMPORARY SHOULDER CLOSURES
1101.05	WORK ZONE VEHICLE ACCESSES
1101.06	WARNING SIGNS FOR BLASTING ZONES
1101.11	TRAFFIC CONTROL DESIGN TABLES
1110.01	STATIONARY WORK ZONE SIGNS
1110.02	PORTABLE WORK ZONE SIGNS
1115.01	FLASHING ARROW BOARDS
1130.01	DRUMS
1135.01	CONES
1145.01	BARRICADES
1150.01	FLAGGERS
1160.01	TEMPORARY CRASH CUSHION
1165.01	TRUCK MOUNTED ATTENUATOR
1170.01	PORTABLE CONCRETE BARRIER
1180.01	SKINNY DRUMS
1205.01	PAVEMENT MARKINGS - LINE TYPES AND OFFSETS
1205.02	PAVEMENT MARKINGS - TWO LANE AND MULTILANE ROADWAYS
1205.03	PAVEMENT MARKINGS - EXITS AND ENTRANCE RAMPS
1205.04	PAVEMENT MARKINGS - INTERSECTIONS
1205.05	PAVEMENT MARKINGS - TURN LANES
1205.06	PAVEMENT MARKINGS - LANE DROPS
1205.07	PAVEMENT MARKINGS - PEDESTRIAN CROSSWALKS
1205.08	PAVEMENT MARKINGS - SYMBOLS AND WORD MESSAGES
1205.09	PAVEMENT MARKINGS - PAINTED ISLANDS
1205.10	PAVEMENT MARKINGS - SCHOOL AREAS
1205.11	PAVEMENT MARKINGS - RAILROAD CROSSINGS
1205.12	PAVEMENT MARKINGS - BRIDGES
1205.13	PAVEMENT MARKINGS - LANE REDUCTIONS
1205.14	PAVEMENT MARKINGS - ROUNDABOUTS
1205.15	PAVEMENT MARKINGS - SUPERSTREETS
1250.01	RAISED PAVEMENT MARKERS - INSTALLATION SPACING
1251.01	RAISED PAVEMENT MARKERS - (PERMANENT AND TEMPORARY)
1261.01	GUARDRAIL AND BARRIER DELINEATORS - INSTALLATION SPACING
1261.02	GUARDRAIL AND BARRIER DELINEATORS - TYPES AND MOUNTING
1262.01	GUARDRAIL END DELINEATION
1264.01	OBJECT MARKERS - TYPES
1264.02	OBJECT MARKERS - INSTALLATION

LEGEND

GENERAL

- DIRECTION OF TRAFFIC FLOW
- DIRECTION OF PEDESTRIAN TRAFFIC FLOW
- EXIST. PVMT.
- NORTH ARROW
- PROPOSED PVMT.
- TEMP. SHORING (LOCATION PURPOSES ONLY)
- WORK AREA
- REMOVAL
- TEMPORARY PAVEMENT

SIGNALS

EXISTING PROPOSED TEMPORARY

PAVEMENT MARKINGS

- EXISTING LINES
- TEMPORARY LINES

TRAFFIC CONTROL DEVICES

- BARRICADE (TYPE III)
- CONE
- DRUM SKINNY DRUM TUBULAR MARKER
- TEMPORARY CRASH CUSHION
- FLASHING ARROW BOARD
- FLAGGER
- LAW ENFORCEMENT
- TRUCK MOUNTED ATTENUATOR (TMA)
- CHANGEABLE MESSAGE SIGN

TEMPORARY SIGNING

- PORTABLE SIGN
- STATIONARY SIGN
- STATIONARY OR PORTABLE SIGN

PAVEMENT MARKERS

- CRYSTAL/CRYSTAL
- CRYSTAL/RED
- YELLOW/YELLOW

PAVEMENT MARKING SYMBOLS

PAVEMENT MARKING SYMBOLS

TEMPORARY PAVEMENT MARKING

COLD APPLIED PLASTIC
C79 - MERGE ARROW

INTEGRATED MULTIPOLYMER
IM20 - WHITE EDGELINE (6")
IM21 - WHITE SOLID LANE LINE (6")
IM23 - 3FT.-9FT./SP WHITE MINISKIP (6")
IM30 - YELLOW EDGELINE (6")

APPROVED: DocuSigned by: Zachary T Clark 9C4DA7F17F6D420...

DATE: 10/01/2025

SEAL

NORTH CAROLINA PROFESSIONAL SEAL 045090 ENGINEER ZACHARY T. CLARK

DOCUMENT NOT CONSIDERED FINAL UNLESS ALL SIGNATURES COMPLETED

DIVISION OF HIGHWAYS STATE OF NORTH CAROLINA DEPARTMENT OF TRANSPORTATION WORK ZONE TRAFFIC CONTROL

ROADWAY STANDARD DRAWINGS & LEGEND

10/1/2025
P:\TIPProjects-B\B583\Traffic\TrafficControl\TCP\B-5831_TC_TMP_01A.dgn
User:drdudley

PROJ. REFERENCE NO.	SHEET NO.
B-5831	TMP-1B

GENERAL NOTES / LOCAL NOTES

CHANGES MAY BE REQUIRED WHEN PHYSICAL DIMENSIONS IN THE DETAIL DRAWINGS, STANDARD DETAILS, AND ROADWAY DETAILS ARE NOT ATTAINABLE TO MEET FIELD CONDITIONS OR RESULT IN DUPLICATE OR UNDESIRED OVERLAPPING OF DEVICES. MODIFICATION MAY INCLUDE: MOVING, SUPPLEMENTING, COVERING, OR REMOVAL OF DEVICES AS DIRECTED BY THE ENGINEER.

THE FOLLOWING GENERAL NOTES APPLY AT ALL TIMES FOR THE DURATION OF THE CONSTRUCTION PROJECT EXCEPT WHEN OTHERWISE NOTED IN THE PLAN OR DIRECTED BY THE ENGINEER.

TIME RESTRICTIONS

A) DO NOT CLOSE OR NARROW TRAVEL LANES AS FOLLOWS:

ROAD NAME	DAY AND TIME RESTRICTIONS
I-77	MONDAY THRU SUNDAY 6:00 A.M. TO 8:00 P.M.
NC 268 BUS.	MONDAY THRU FRIDAY 7:00 A.M. TO 8:30 A.M.

B) DO NOT CLOSE OR NARROW TRAVEL LANES DURING HOLIDAYS AND SPECIAL EVENTS AS FOLLOWS:

ROAD NAME

I-77 & NC 268 BUS.

HOLIDAY

1. FOR ANY UNEXPECTED OCCURRENCE THAT CREATES UNUSUALLY HIGH TRAFFIC VOLUMES, AS DIRECTED BY THE ENGINEER.
2. FOR NEW YEAR'S, BETWEEN THE HOURS OF 6:00 A.M. DECEMBER 31st TO 8:00 P.M. JANUARY 2ND. IF NEW YEAR'S DAY IS ON A FRIDAY, SATURDAY, SUNDAY, OR MONDAY THEN UNTIL 8:00 P.M. THE FOLLOWING TUESDAY.
3. FOR EASTER, BETWEEN THE HOURS OF 6:00 A.M. THURSDAY AND 8:00 P.M. MONDAY.
4. FOR MEMORIAL DAY, BETWEEN THE HOURS OF 6:00 A.M. FRIDAY TO 8:00 P.M. TUESDAY.
5. FOR INDEPENDENCE DAY, BETWEEN THE HOURS OF 6:00 A.M. THE DAY BEFORE INDEPENDENCE DAY AND 8:00 P.M. THE DAY AFTER INDEPENDENCE DAY.

   IF INDEPENDENCE DAY IS ON A FRIDAY, SATURDAY, SUNDAY OR MONDAY THEN BETWEEN THE HOURS OF 6:00 A.M. THE THURSDAY BEFORE INDEPENDENCE DAY AND 8:00 P.M. THE TUESDAY AFTER INDEPENDENCE DAY.
6. FOR LABOR DAY, BETWEEN THE HOURS OF 6:00 A.M. FRIDAY AND 8:00 P.M. TUESDAY.
7. FOR THANKSGIVING DAY, BETWEEN THE HOURS OF 6:00 A.M. TUESDAY TO 8:00 P.M. MONDAY.
8. FOR CHRISTMAS, BETWEEN THE HOURS OF 6:00 A.M. THE FRIDAY BEFORE THE WEEK OF CHRISTMAS DAY AND 8:00 P.M. THE FOLLOWING TUESDAY AFTER THE WEEK OF CHRISTMAS.

C) DO NOT CONDUCT MULTI VEHICLE HAULING AS FOLLOWS; INGRESS AND EGRESS FROM RAMPS BE ALLOWED:

ROAD NAME	DAY AND TIME RESTRICTIONS
I-77	MONDAY THRU SUNDAY FROM 6:00 A.M. TO 8:00 P.M.

D) DO NOT CONDUCT ANY HAULING OPERATIONS AGAINST THE FLOW OF TRAFFIC OF AN OPEN TRAVELWAY UNLESS THE HAULING OPERATION IS PROTECTED BY BARRIER OR GUARDRAIL OR AS DIRECTED BY THE ENGINEER.

LANE AND SHOULDER CLOSURE REQUIREMENTS

E) REMOVE LANE CLOSURE DEVICES FROM THE LANE WHEN WORK IS NOT BEING PERFORMED BEHIND THE LANE CLOSURE OR WHEN A LANE CLOSURE IS NO LONGER NEEDED OR AS DIRECTED BY THE ENGINEER.

F) WHEN PERSONNEL AND/OR EQUIPMENT ARE WORKING WITHIN 15 FT OF AN OPEN TRAVEL LANE, CLOSE THE NEAREST OPEN SHOULDER USING ROADWAY STANDARD DRAWING NO. 1101.04 UNLESS THE WORK AREA IS PROTECTED BY BARRIER OR GUARDRAIL OR A LANE CLOSURE IS INSTALLED.

G) WHEN PERSONNEL AND/OR EQUIPMENT ARE WORKING WITHIN 5 FT OF AN OPEN TRAVEL LANE ON AN UNDIVIDED FACILITY, CLOSE THE NEAREST OPEN TRAVEL LANE USING ROADWAY STANDARD DRAWING NO. 1101.02 UNLESS THE WORK AREA IS PROTECTED BY BARRIER OR GUARDRAIL.

   WHEN PERSONNEL AND/OR EQUIPMENT ARE WORKING WITHIN 10 FT OF AN OPEN TRAVEL LANE ON A DIVIDED FACILITY, CLOSE THE NEAREST OPEN TRAVEL LANE USING ROADWAY STANDARD DRAWING NO. 1101.02 UNLESS THE WORK AREA IS PROTECTED BY BARRIER OR GUARDRAIL.

H) WHEN PERSONNEL AND/OR EQUIPMENT ARE WORKING WITHIN A LANE OF TRAVEL OF AN UNDIVIDED OR DIVIDED FACILITY, CLOSE THE LANE ACCORDING TO THE TRAFFIC CONTROL PLANS, ROADWAY STANDARD DRAWINGS, OR AS DIRECTED BY THE ENGINEER. CONDUCT THE WORK SO THAT ALL PERSONNEL AND/OR EQUIPMENT REMAIN WITHIN THE CLOSED TRAVEL LANE.

I) DO NOT WORK SIMULTANEOUSLY WITHIN 15 FT ON BOTH SIDES OF AN OPEN TRAVELWAY, RAMP, OR LOOP WITHIN THE SAME LOCATION UNLESS PROTECTED WITH GUARDRAIL OR BARRIER.

PAVEMENT EDGE DROP OFF REQUIREMENTS

J) DO NOT EXCEED A DIFFERENCE OF 2 INCHES IN ELEVATION BETWEEN OPEN LANES OF TRAFFIC FOR NOMINAL LIFTS OF 1.5 INCHES. INSTALL ADVANCE WARNING "UNEVEN LANES" SIGNS (W8-11) IN ADVANCE AND A MINIMUM OF EVERY HALF MILE THROUGHOUT THE UNEVEN AREA.

K) MITIGATE LONGITUDINAL PAVEMENT EDGE OR TERRAIN DROP-OFF CONDITIONS CREATED BY CONSTRUCTION OPERATIONS IN ACCORDANCE WITH THE NCDOT TRANSPORTATION MANAGEMENT PLANS DESIGN MANUAL.

TRAFFIC PATTERN ALTERATIONS

L) NOTIFY THE ENGINEER THIRTY (30) CALENDAR DAYS PRIOR TO ANY TRAFFIC PATTERN ALTERATION.

M) PRIOR TO SHIFTING TRAFFIC TO A NEW PATTERN, REMOVE ALL CONFLICTING MARKERS AND SNOWPLOWABLE MARKER CASTINGS, AND PATCH ALL HOLES. PAVEMENT MARKINGS ON ASPHALT SURFACES OF I-77, INCLUDING ALL RAMPS AND LOOPS, SHALL BE EITHER MILLED AND FILLED OR CONCEALED BY APPLYING A UNIFORM OVERLAY. AT A MINIMUM, THE MILL AND FILL OR UNIFORM OVERLAY SHALL COVER THE ENTIRE WIDTH OF ANY SHIFTED TRAVEL LANE(S) CONTAINING THE CONFLICTING MARKINGS AND EXTEND TO THE OUTSIDE EDGE OF ANY CONFLICTING MARKINGS ON SHOULDERS.

SIGNING

N) INSTALL ADVANCE WORK ZONE WARNING SIGNS WHEN WORK IS WITHIN 40 FT FROM THE EDGE OF TRAVEL LANE AND NO MORE THAN THREE (3) DAYS PRIOR TO THE BEGINNING OF CONSTRUCTION.

O) PROVIDE SIGNING AND DEVICES REQUIRED TO CLOSE THE ROAD ACCORDING TO THE ROADWAY STANDARD DRAWINGS AND TRAFFIC CONTROL PLANS.

   PROVIDE SIGNING REQUIRED FOR THE OFF-SITE DETOUR ROUTE AS SHOWN IN THE TRAFFIC CONTROL PLANS.

P) COVER OR REMOVE ALL SIGNS AND DEVICES REQUIRED TO CLOSE THE ROAD WHEN ROAD CLOSURE IS NOT IN OPERATION.

   COVER OR REMOVE ALL SIGNS REQUIRED FOR THE OFF-SITE DETOUR WHEN THE DETOUR IS NOT IN OPERATION.

Q) ENSURE ALL NECESSARY SIGNING IS IN PLACE PRIOR TO ALTERING ANY TRAFFIC PATTERN.

R) INSTALL BLACK ON ORANGE "DIP" SIGNS (W8-2) AND/OR "BUMP" SIGNS (W8-1) 250 FT IN ADVANCE OF THE UNEVEN AREA, OR AS DIRECTED BY THE ENGINEER.

S) MAINTAIN AND MODIFY GUIDE SIGNS THROUGHOUT THE ENTIRE CONSTRUCTION DURATION AS REQUIRED BY THE TRAFFIC CONTROL PLANS.

   TEMPORARY TYPE A OR B GUIDE SIGNS MAY BE STATIONARY MOUNTED ON TEMPORARY SUPPORTS OR ON A PORTABLE MOVEABLE SYSTEM. TEMPORARY GUIDE SIGNS THAT ARE NOT OVERHEAD-MOUNTED SHALL BE INSTALLED SUCH THAT THE BOTTOM OF THE SIGN IS A MINIMUM OF 7 FT AND NO MORE THAN 10 FT ABOVE THE PAVEMENT SURFACE AND SHALL BE RIGID ENOUGH TO WITHSTAND 90 MPH WINDS. LATERALLY, THE OUTER EDGE OF THE GUIDE SIGN SHALL NOT BE MORE THAN 60 FT FROM THE EDGE OF TRAVEL.

TRAFFIC BARRIER

T) INSTALL TEMPORARY BARRIER ACCORDING TO THE TRANSPORTATION MANAGEMENT PLANS A MAXIMUM OF TWO (2) WEEKS PRIOR TO BEGINNING WORK IN ANY LOCATION. ONCE TEMPORARY BARRIER IS INSTALLED AT ANY LOCATION PROCEED IN A CONTINUOUS MANNER TO COMPLETE THE PROPOSED WORK IN THAT LOCATION UNLESS OTHERWISE STATED IN THE TRANSPORTATION MANAGEMENT PLANS OR AS DIRECTED BY THE ENGINEER.

   DO NOT PLACE BARRIER DIRECTLY ON ANY SURFACE OTHER THAN ASPHALT OR CONCRETE.

   ONCE TEMPORARY BARRIER IS INSTALLED AT ANY LOCATION AND NO WORK IS PERFORMED BEHIND THE TEMPORARY BARRIER FOR A PERIOD LONGER THAN TWO (2) MONTHS, REMOVE / RESET TEMPORARY BARRIER AT NO COST TO THE DEPARTMENT UNLESS OTHERWISE STATED IN THE TRANSPORTATION MANAGEMENT PLANS. TEMPORARY BARRIER IS PROTECTING A HAZARD, OR AS DIRECTED BY THE ENGINEER.

   INSTALL TEMPORARY BARRIER WITH THE TRAFFIC FLOW BEGINNING WITH THE UPSTREAM SIDE OF TRAFFIC. REMOVE TEMPORARY BARRIER AGAINST THE TRAFFIC FLOW BEGINNING WITH THE DOWNSTREAM SIDE OF TRAFFIC.

   INSTALL GLARE SCREEN TO PORTABLE CONCRETE BARRIER WHERE APPLICABLE PER CHAPTER 4.8 OF NCDOT ROADWAY DESIGN MANUAL.

   INSTALL AND SPACE DRUMS NO GREATER THAN TWICE THE POSTED SPEED LIMIT (MPH) TO CLOSE OR KEEP THE SECTION OF THE ROADWAY CLOSED UNTIL THE TEMPORARY BARRIER CAN BE PLACED OR AFTER THE TEMPORARY BARRIER IS REMOVED.

U) PROTECT THE APPROACH END OF PORTABLE CONCRETE BARRIER AT ALL TIMES DURING THE INSTALLATION AND REMOVAL OF THE BARRIER BY EITHER A TRUCK MOUNTED ATTENUATOR (MAXIMUM 72 HOURS) OR A TEMPORARY CRASH CUSHION.

   PROTECT THE APPROACH END OF PORTABLE CONCRETE BARRIER FROM ONCOMING TRAFFIC AT ALL TIMES BY A TEMPORARY CRASH CUSHION UNLESS THE APPROACH END OF MOVABLE/PORTABLE CONCRETE BARRIER IS OFFSET FROM ONCOMING TRAFFIC AS FOLLOWS OR AS SHOWN IN THE PLANS: (SEE ALSO 1101.05)

POSTED SPEED LIMIT	MINIMUM OFFSET
40 OR LESS	15 FT
45 - 50	20 FT
55	25 FT
60 MPH or HIGHER	30 FT

TRAFFIC CONTROL DEVICES

V) WHEN LANE CLOSURES ARE NOT IN EFFECT SPACE CHANNELIZING DEVICES IN WORK AREAS NO GREATER IN FEET THAN TWICE THE POSTED SPEED LIMIT (MPH) EXCEPT, 10 FT ON-CENTER IN RADII, AND 3 FT OFF THE EDGE OF AN OPEN TRAVELWAY. REFER TO STANDARD SPECIFICATIONS FOR ROADS AND STRUCTURES SECTIONS 1130 (DRUMS), 1135 (CONES) AND 1180 (SKINNY DRUMS) FOR ADDITIONAL REQUIREMENTS.

W) PLACE TYPE III BARRICADES, WITH "ROAD CLOSED" SIGN R11-2 ATTACHED, OF SUFFICIENT LENGTH TO CLOSE ENTIRE ROADWAY.

X) PLACE ADDITIONAL SETS OF THREE CHANNELIZING DEVICES DRUMS PERPENDICULAR TO THE EDGE OF TRAVELWAY ON 500 FT CENTERS WHEN UNOPENED LANES ARE CLOSED TO TRAFFIC.

PAVEMENT MARKINGS AND MARKERS

Y) INSTALL TEMPORARY PAVEMENT MARKINGS AND TEMPORARY PAVEMENT MARKERS ON INTERIM LAYERS OF PAVEMENT AS FOLLOWS:

ROAD NAME	MARKING	MARKER
I-77	INTEGRATED MULTIPOLYMER & COLD APPLIED PLASTIC	TEMP RAISED

Z) PLACE ONE APPLICATION OF PAINT FOR TEMPORARY TRAFFIC PATTERNS. PLACE A SECOND APPLICATION OF PAINT SIX (6) MONTHS AFTER THE INITIAL APPLICATION AND EVERY SIX MONTHS AS DIRECTED BY THE ENGINEER.

AA) TIE PROPOSED PAVEMENT MARKING LINES TO EXISTING PAVEMENT MARKING LINES.

BB) REMOVE/REPLACE ANY CONFLICTING/DAMAGED PAVEMENT MARKINGS AND MARKERS BY THE END OF EACH DAY'S OPERATION.

MISCELLANEOUS

CC) LAW ENFORCEMENT MAY BE USED TO MAINTAIN TRAFFIC THROUGH THE WORK AREA AND/OR INTERSECTIONS AS DIRECTED BY THE ENGINEER.

DD) IN THE EVENT A TIE-IN CANNOT BE MADE IN ONE DAY'S TIME, BRING THE TIE-IN AREA TO AN APPROPRIATE ROADWAY ELEVATION AS DETERMINED BY THE ENGINEER. PLACE BLACK ON ORANGE "LOOSE GRAVEL" SIGNS (W8-7) AND BLACK ON ORANGE "PAVEMENT ENDS" SIGNS (W8-3) AND RESPECTIVELY IN ADVANCE OF THE UNEVEN AREAS. USE DRUMS TO DELINEATE THE EDGE OF ROADWAY ALONG UNPAVED AREAS.

EE) NOTIFY NCDOT STATEWIDE TRANSPORTATION OPERATIONS CENTER (STOC) AT 877-627-7862 WHEN INSTALLING AND REMOVING LANE CLOSURES ON I-77.

FF) COORDINATE WITH NCDOT RESIDENT ENGINEER AND NORFOLK SOUTHERN TO SCHEDULE WORK WITHIN RAILROAD RIGHT OF WAY.

MANAGEMENT STRATEGIES

THE FOLLOWING LISTED WORK ZONE STRATEGIES ARE RECOMMENDED FOR INCLUSION WITHIN THIS TRANSPORTATION MANAGEMENT PLAN (TMP).

- FULL ROADWAY CLOSURES
- ROLLING ROADBLOCK
- LANE SHIFTS/CLOSURES
- SHOULDER CLOSURES
- ONE-LANE, TWO WAY OPERATION (FLAGGING)
- NIGHT WORK
- WORK HOUR RESTRICTIONS FOR PEAK TRAVEL
- OFF-SITE DETOUR/ USE OF ALTERNATIVE ROUTES
- SPEED LIMIT REDUCTION
- ITS FOR TRAFFIC MONITORING/MANAGEMENT
- PRESENCE LIGHTING FOR NIGHT LANE CLOSURES BEYOND DRAWINGS
- CONNECTED LANE CLOSURE SYSTEM

- REFER TO PADDLER SAFETY PLAN FOR ANY ADDITIONAL DEVICES AND MEASURES REQUIRED FOR PROTECTION OF PEDESTRIANS ACCESSING THE YADKIN RIVER.

APPROVED: DocuSigned by: Zachary T Clark 9C4DA7F17F6D420...

DATE: 10/01/2025

SEAL

NORTH CAROLINA PROFESSIONAL SEAL 045090 ENGINEER ZACHARY T. CLARK

DOCUMENT NOT CONSIDERED FINAL UNLESS ALL SIGNATURES COMPLETED

DIVISION OF HIGHWAYS STATE OF NORTH CAROLINA DEPARTMENT OF TRANSPORTATION WORK ZONE TRAFFIC CONTROL

TRANSPORTATION OPERATIONS PLAN

10/1/2025
P:\TIPProjects-B\B583I\Traffic\TrafficControl\TCP\B-583I_TC_TMP_01B.dgn
User:drdudley

PROJ. REFERENCE NO.	SHEET NO.
B-5831	TMP-2

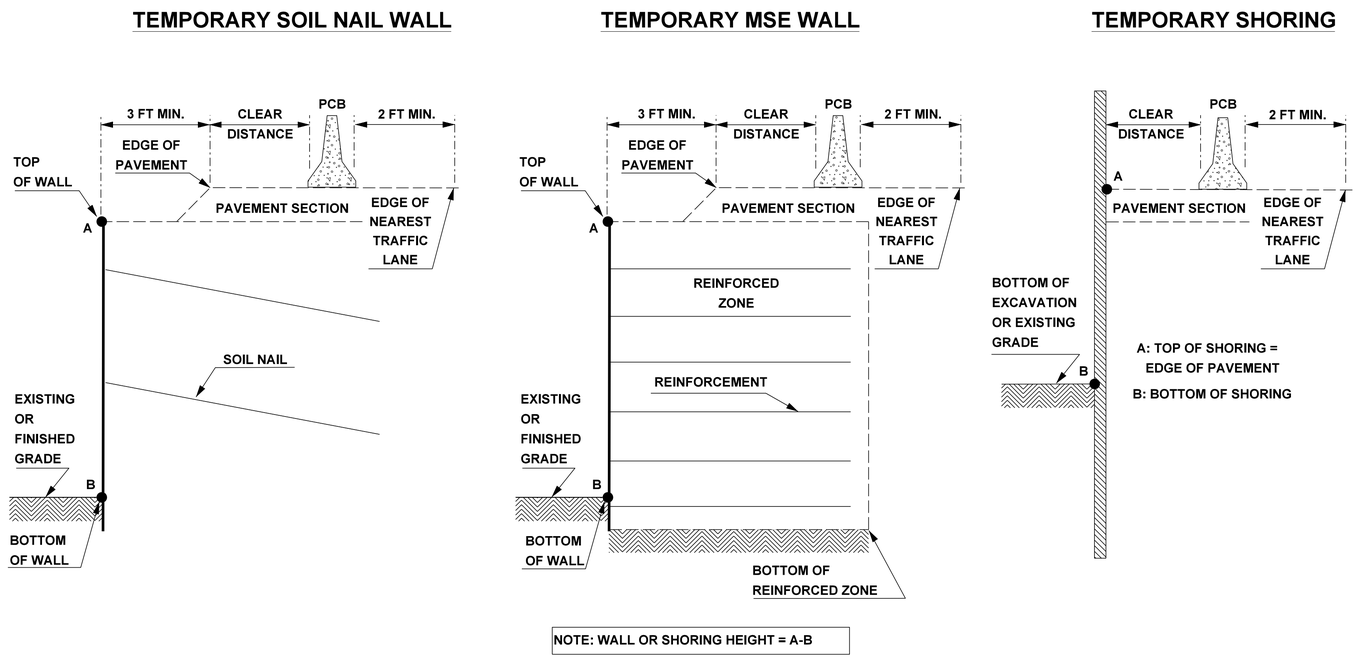

FIGURE A

NOTES

1- REFER TO THE TRAFFIC CONTROL PLANS FOR TEMPORARY SHORING LOCATIONS AND NOTES.

2- REFER TO THE "TEMPORARY SHORING" STANDARD PROVISION FOR INFORMATION ABOUT TEMPORARY SHORING AND PORTABLE CONCRETE BARRIER (PCB).

3- PCB IS REQUIRED IF TEMPORARY SHORING/WALL IS LOCATED WITHIN THE CLEAR ZONE IN ACCORDANCE WITH THE AASHTO ROADSIDE DESIGN GUIDE. DO NOT PLACE BARRIER DIRECTLY ON ANY SURFACE OTHER THAN ASPHALT OR CONCRETE. (CONTACT NCDOT PAVEMENT MANAGEMENT FOR APPLICABLE PAVEMENT DESIGN).

4- BASED ON THE CLEAR DISTANCE, OFFSET, DESIGN SPEED AND PAVEMENT TYPE, CHOOSE AN UNANCHORED OR ANCHORED PCB FROM THE TABLE SHOWN IN FIGURE B. CLEAR DISTANCE IS DEFINED AS SHOWN IN FIGURE A AND OFFSET IS DEFINED AS SHOWN IN FIGURE B.

5- AT THE CONTRACTOR'S OPTION OR IF THE MINIMUM REQUIRED CLEAR DISTANCE IS NOT AVAILABLE, SET PCB NEXT TO AND UP AGAINST THE TRAFFIC SIDE OF THE TEMPORARY SHORING/WALLS EXCEPT FOR BARRIER ABOVE TEMPORARY WALLS. PCB WITH THE MINIMUM REQUIRED CLEAR DISTANCE IS REQUIRED ABOVE TEMPORARY WALLS.

6- USE NCDOT PORTABLE CONCRETE BARRIER (PCB) IN ACCORDANCE WITH ROADWAY STANDARD DRAWING NO. 1170.01 AND SECTION 1170 OF THE STANDARD SPECIFICATIONS.

7- SET PCB WITH A MINIMUM HORIZONTAL DISTANCE OF 2 FT BETWEEN THE FRONT FACE OF THE BARRIER AND THE EDGE OF THE NEAREST TRAFFIC LANE AS SHOWN IN FIGURE A UNLESS OTHERWISE SHOWN IN THE PLANS OR APPROVED BY THE ENGINEER.

8- FOR PCB ABOVE AND BEHIND TEMPORARY WALLS, PROVIDE A MINIMUM DISTANCE OF 3 FT BETWEEN THE EDGE OF PAVEMENT AND THE WALL FACE AS SHOWN IN FIGURE A. IF THIS MINIMUM REQUIRED DISTANCE IS NOT AVAILABLE, CONTACT THE ENGINEER.

9- TABLE SHOWN IN FIGURE B IS BASED ON NCDOT RESEARCH PROJECT NO. 2005-010 WITH VEHICLE TYPE USED FOR NCHRP 350 CRASH TESTS.

MINIMUM REQUIRED CLEAR DISTANCE, inches

Barrier Type	Pavement Type	Offset * ft	Design Speed, mph <30	31-40	41-50	51-60	61-70	71-80
Unanchored PCB	Asphalt	<8	24	26	29	32	36	40
		8-14	26	28	31	35	38	42
		14-20	27	29	34	36	39	43
		20-26	28	31	35	38	40	44
		26-32	29	32	36	39	42	45
		32-38	30	34	38	41	43	46
		38-44	31	34	41	43	45	48
		44-50	31	35	41	43	46	49
		50-56	32	36	42	44	47	50
		>56	32	36	42	45	47	51
	Concrete	<8	17	18	21	22	25	26
		8-14	19	20	23	25	26	29
		14-20	22	22	24	26	28	31
		20-26	23	24	26	27	30	34
		26-32	24	25	27	28	32	35
		32-38	24	26	27	30	33	36
		38-44	25	26	28	30	34	37
		44-50	26	26	28	32	35	37
		50-56	26	26	28	32	35	38
		>56	26	27	29	32	36	38
Anchored PCB	Asphalt	All Offsets	24 for All Design Speeds					
Anchored PCB	Concrete (including bridge approach slabs)	All Offsets	12 for All Design Speeds					

* See Figure Below

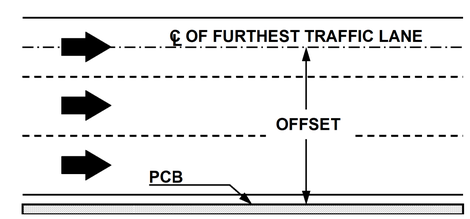

FIGURE B

APPROVED: DocuSigned by: Zachary T Clark 9C4DA7F17F6D420...

DATE: 10/07/2025

SEAL

NORTH CAROLINA PROFESSIONAL SEAL 045090 ENGINEER ZACHARY T. CLARK

DOCUMENT NOT CONSIDERED FINAL UNLESS ALL SIGNATURES COMPLETED

DIVISION OF HIGHWAYS STATE OF NORTH CAROLINA DEPARTMENT OF TRANSPORTATION WORK ZONE TRAFFIC CONTROL

PORTABLE CONCRETE BARRIER AT TEMPORARY SHORING LOCATIONS

5/29/2024
P:\TIPProjects-B\B583\Traffic\TrafficControl\TCP\B-5831_TC_TMP_02.dgn
User:drdudley

PROJ. REFERENCE NO.	SHEET NO.
B-5831	TMP-2A

Shoring Location No. 1

FOR TEMPORARY SHORING AND POSITIVE PROTECTION FOR TEMPORARY SHORING, SEE PLANS AND TEMPORARY SHORING PROVISION.

TEMPORARY SHORING IS REQUIRED FOR THE END BENT CONSTRUCTION FROM STATION 27+95 -L-, 32′ LT, TO STATION 28+50 -L-, 32′ LT.

BEFORE BEGINNING TEMPORARY SHORING DESIGN OR CONSTRUCTION, SURVEY EXISTING GROUND ELEVATIONS IN THE VICINITY OF SHORING LOCATIONS TO DETERMINE ACTUAL SHORING HEIGHTS.

DESIGN TEMPORARY SHORING FROM STATION 27+95 -L-, 32′ LT, TO STATION 28+50 -L-, 32′ LT, FOR THE FOLLOWING ASSUMED SOIL PARAMETERS AND GROUNDWATER ELEVATION:

UNIT WEIGHT (γ) = 120 LB/CF
FRICTION ANGLE (ϕ) = 30 DEGREES
COHESION (c) = 0 LB/SF
GROUNDWATER ELEVATION = 885 FT

DRIVEN PILING FOR TEMPORARY SHORING FROM STATION 27+95 -L-, 32′ LT, TO STATION 28+50 -L-, 32′ LT MAY NOT PENETRATE BELOW ELEVATION 2822 FT DUE TO OBSTRUCTIONS, VERY DENSE OR HARD SOIL, BOULDERS OR WEATHERED OR HARD ROCK.

DO NOT USE A TEMPORARY WALL FOR TEMPORARY SHORING FROM STATION 27+95 -L-, 32′ LT, TO STATION 28+50 -L-, 32′ LT.

AT THE CONTRACTOR'S OPTION, USE STANDARD TEMPORARY SHORING FOR TEMPORARY SHORING FROM STATION 27+95 -L-, 32′ LT, TO STATION 28+50 -L-, 32′ LT. SEE STANDARD DETAIL NO. 1801.01 FOR STANDARD TEMPORARY SHORING.

IT MAY BE PREFERRED TO USE A TEMPORARY SOIL NAIL WALL FOR TEMPORARY SHORING FROM STATION 27+95 -L-, 32′ LT, TO STATION 28+50 -L-, 32′ LT. FOR TEMPORARY SOIL NAIL WALLS, SEE TEMPORARY SOIL NAIL WALLS PROVISION.

Shoring Location No. 2

FOR TEMPORARY SHORING AND POSITIVE PROTECTION FOR TEMPORARY SHORING, SEE PLANS AND TEMPORARY SHORING PROVISION.

TEMPORARY SHORING IS REQUIRED FOR THE END BENT CONSTRUCTION FROM STATION 35+95 -L-, 32′ LT, TO STATION 36+60 -L-, 32′ LT.

BEFORE BEGINNING TEMPORARY SHORING DESIGN OR CONSTRUCTION, SURVEY EXISTING GROUND ELEVATIONS IN THE VICINITY OF SHORING LOCATIONS TO DETERMINE ACTUAL SHORING HEIGHTS.

DESIGN TEMPORARY SHORING FROM STATION 35+95 -L-, 27′ LT, TO STATION 36+60 -L-, 27′ LT, FOR THE FOLLOWING ASSUMED SOIL PARAMETERS AND GROUNDWATER ELEVATION:

UNIT WEIGHT (γ) = 120 LB/CF
FRICTION ANGLE (ϕ) = 30 DEGREES
COHESION (c) = 0 LB/SF
GROUNDWATER ELEVATION = 905 FT

DRIVEN PILING FOR TEMPORARY SHORING FROM STATION 35+95 -L-, 32′ LT, TO STATION 36+60 -L-, 32′ LT MAY NOT PENETRATE BELOW ELEVATION 2814 FT DUE TO OBSTRUCTIONS, VERY DENSE OR HARD SOIL, BOULDERS OR WEATHERED OR HARD ROCK.

DO NOT USE A TEMPORARY WALL FOR TEMPORARY SHORING FROM STATION 35+95 -L-, 32′ LT, TO STATION 36+60 -L-, 32′ LT.

AT THE CONTRACTOR'S OPTION, USE STANDARD TEMPORARY SHORING FOR TEMPORARY SHORING FROM STATION 35+95 -L-, 32′ LT, TO STATION 36+60 -L-, 32′ LT. SEE STANDARD DETAIL NO. 1801.01 FOR STANDARD TEMPORARY SHORING.

IT MAY BE PREFERRED TO USE A TEMPORARY SOIL NAIL WALL FOR TEMPORARY SHORING FROM STATION 35+95 -L-, 32′ LT, TO STATION 36+60 -L-, 32′ LT. FOR TEMPORARY SOIL NAIL WALLS, SEE TEMPORARY SOIL NAIL WALLS PROVISION.

* THE TEMPORARY SHORING NOTES SHOWN ON THIS SHEET WERE PROVIDED THROUGH A SEALED DOCUMENT FROM THE GEOTECHNICAL ENGINEERING UNIT. THE DOCUMENT WAS SUBMITTED TO THE WZTCU ON FEBRUARY 3, 2025 AND SEALED BY A PROFESSIONAL ENGINEER, SHIPING YANG, PH.D, P.E., LICENSE # (031361)*.

APPROVED: DocuSigned by: Zachary T Clark 9C4DA7F117F6D420...

DATE: 10/07/2025

SEAL

NORTH CAROLINA PROFESSIONAL SEAL 045090 ENGINEER ZACHARY T. CLARK

DIVISION OF HIGHWAYS STATE OF NORTH CAROLINA DEPARTMENT OF TRANSPORTATION WORK ZONE TRAFFIC CONTROL

DOCUMENT NOT CONSIDERED FINAL UNLESS ALL SIGNATURES COMPLETED

TEMPORARY SHORING DATA

2/12/2025
P:\TIPProjects-B\B583\Traffic\TrafficControl\TCP\B-5831_TC_TMP_02A.dgn
User:drdudley

PROJ. REFERENCE NO.	SHEET NO.
B-5831	TMP-3

PHASING

BEFORE BEGINNING ANY WORK ACTIVITES THE CONTRACTOR SHALL INSTALL ALL NECESSARY SIGNS AND TRAFFIC CONTROL DEVICES. FIELD VERIFY LOCATIONS WITH RESIDENT ENGINEER PRIOR TO INSTALLATION.

ERADICATE EXISTING PAVEMENT MARKINGS WHICH CONFLICT WITH MARKINGS SHOWN IN THIS PLAN. REPLACE FADED OR WORN MARKINGS AS NEEDED DURING CONSTRUCTION TO MAINTAIN CLEAR DIRECTION TO THE TRAVELLING PUBLIC OR AS DIRECTED BY THE ENGINEER.

PAVEMENT WEDGING/BUILD UP SHALL BE PERFORMED IN SUCH A MANNER THAT PONDING OF WATER WILL NOT OCCUR IN OPEN TRAVEL LANES.

ALL DRAINAGE CONSTRUCTED UNDER LANE CLOSURES SHALL BE COMPLETED IN A SINGLE WORK PERIOD. TIME RESTRICTIONS MAY BE SUBJECT TO CHANGE TO ACCOMMODATE DRAINAGE CONSTRUCTION PER THE RESIDENT ENGINEER.

PHASE IA

STEP 1:

- USING RSD 1101.01 SHEETS 1 & 3 OF 3, INSTALL WORK ZONE ADVANCE WARNING SIGNS ON I-77, US 21 BYPASS, NC 268 BUS/E MAIN ST, AND NC 67.

- USING RSD 1101.02 AND 1101.04 AS NECESSARY, INSTALL DIGITAL SPEED LIMIT SIGNS.

STEP 2:

- USING LANE CLOSURES, BEGIN CONSTRUCTION OF -XOVR1- & -XOVR2-, INCLUDING TEMPORARY PAVEMENT AND THE FOLLOWING DRAINAGE PER TMP-4 THRU TMP-7:

  * STRUCTURES 2B01, 0406, & 15″ PIPE

  * STRUCTURE 2B02 & 15″ RCP

  * STRUCTURES 2B06, 2B07, & 15″ PIPE

  * STRUCTURES 2B12, 2B13, & 15″ PIPE

STEP 3:

- ONCE ADEQUATE PAVEMENT HAS BEEN CONSTRUCTED, INSTALL PCB AS SHOWN ON TMP-4 THRU TMP-7.

- BEHIND PCB, AND USING LANE CLOSURES AS NEEDED, CONTINUE CONSTRUCTION OF -XOVR1- & -XOVR2-, INCLUDING REMOVAL OF CABLE BARRIER AT -L- STA. 11+15 AS SHOWN ON TMP-4.

- BEHIND PCB, INSTALL THE FOLLOWING DRAINAGE AS SHOWN ON TMP-4 THRU TMP-7:

  * STRUCTURE 0400

  * STRUCTURES 0401, 0402, 2B03, 0403, 0404, 0407, 0408, & ALL CONNECTING PIPES

  * STRUCTURE 2B03 & 15″ PIPE

  * STRUCTURES 2B08, 2B09, & 15″ RCP

PHASE IB

STEP 1:

- USING RSD 1101.02 SHEET 8 AND 1101.04 SHEET 1 AS NECESSARY, REMOVE EXISTING PAVEMENT MARKINGS, INSTALL TEMPORARY PAVEMENT MARKINGS AS SHOWN ON TMP-8 THRU TMP-11, INSTALL LANE CLOSURES ON US 21 BYPASS AS SHOWN ON TMP-11A, SHIFT I-77 SB TRAFFIC TO PATTERN SHOWN ON TMP-8 THRU TMP-11, UNCOVER SPEED LIMIT REDUCTION SIGNS, AND REDUCE SPEED LIMIT FOR SB TRAFFIC ONLY.

- BEHIND PCB AND USING LANE CLOSURES AS NEEDED, CONTINUE CONSTRUCTION OF -XOVR1- & -XOVR2-, INCLUDING THE FOLLOWING DRAINAGE, PER ROADWAY PLANS:

  * STRUCTURE 0601 & 15″ RCP

  * STRUCTURE 0602 AND 15″ RCP

- ONCE ADEQUATE PAVEMENT IS CONSTRUCTED TO SUPPORT PCB, USING LANE CLOSURES AS NEEDED, SHIFT PCB INSTALLED ON I-77 IN PHASE IA, REMOVE CABLE BARRIER AT -L- STA. 54+07.5 AS SHOWN ON TMP-11 AND INSTALL ADDITIONAL PCB ON I-77 SB AS SHOWN ON TMP-8 THRU TMP-11.

STEP 2:

- BEHIND PCB, CONSTRUCT THE FOLLOWING DRAINAGE AS SHOWN ON TMP-8 THRU TMP-11:

  * STRUCTURES 2B04, 0405 & 15″ PIPE

  * STRUCTURES 2B05, 0516, 0517, 0518, & ALL CONNECTING 15″ & 24″ PIPES

  * STRUCTURES 2B10, 2B11, 0600, & ALL CONNECTING 15″ PIPES

  * STRUCTURES 0509, 0510, 0511, ALL CONNECTING 18″ PIPES AND SHOULDER BERM GUTTER

- BEHIND PCB INSTALLED AT -L- STA. 52+80 ON I-77 SB, AND USING LANE CLOSURES AS NEEDED, PERFORM THE FOLLOWING PER ROADWAY PLANS:

  * TRENCHLESS INSTALL PERMANENT 24″ WELDED STEEL ALONG WITH STRUCTURES 0603, 0604, 0605, & 0606 PER ROADWAY PLANS

  * FILL EXISTING 18″ CMP WITH FLOWABLE FILL

STEP 3:

- BEHIND PCB AND USING RSD 1101.02 SHEET 4 AS NECESSARY, COMPLETE CONSTRUCTION OF TEMPORARY MEDIAN CROSSOVER PER ROADWAY PLANS.

PHASE II

STEP 1:

- UNDER LANE CLOSURES AS NEEDED, RELOCATE PCB AND INSTALL GLARE SCREENS AS SHOWN ON TMP-12 THRU TMP-15.

- USING RSD 1101.02 SHEETS 4 & 16 AS NECESSARY, INSTALL TEMPORARY PAVEMENT MARKINGS, MARKERS AND SIGNAGE FOR CROSSOVER AS SHOWN ON TMP-12 THRU TMP-15.

- UNCOVER WORK ZONE SIGNS FOR SPEED LIMIT REDUCTION AND REDUCE SPEED LIMIT FOR I-77 NB. UNDER LANE CLOSURES AS NEEDED, SHIFT I-77 NB TRAFFIC TO PROPOSED MEDIAN CROSSOVER PATTERN, AND INSTALL TEMPORARY SHORING AS SHOWN ON TMP-13 AND TMP-14.

- USING FLAGGERS AND LANE CLOSURES AS NEEDED, INSTALL SIGNS AND OTHER TRAFFIC CONTROL DEVICES FOR OFF-SITE DETOUR SHOWN ON TMP-12. COVER UNTIL OFF-SITE DETOUR IS IN USE.

THE CONTRACTOR SHALL NOT CLOSE -Y2- NC 268 BUS AS OUTLINED IN PHASE II, STEP 2 FOR LONGER THAN SEVEN (7) CONSECUTIVE CALENDAR DAYS. AT THE END OF EACH CLOSURE PERIOD, COVER SIGNS AND OTHER TRAFFIC CONTROL DEVICES USED FOR OFF-SITE DETOUR AND PLACE -Y2- NC 268 BUS TRAFFIC BACK ONTO EXISTING PATTERN. SEE ICTS AND LIQUIDATED DAMAGES.

STEP 2:

- AWAY FROM TRAFFIC, BEGIN REMOVING EXISTING I-77 NB BRIDGE.

- USING OFF-SITE DETOUR SHOWN ON TMP-16, UNCOVER SIGNS AND OTHER TRAFFIC CONTROL DEVICES INSTALLED IN PHASE II, STEP 1 AND CLOSE -Y2- NC 268 BUS AS NECESSARY TO COMPLETE BRIDGE DEMOLITION. VERIFY OFF-SITE DETOUR IS IN PLACE PRIOR TO CLOSING NC 268 BUS.

- UPON COMPLETION OF BRIDGE DEMOLITION, AND USING OFF-SITE DETOUR SHOWN ON TMP-16, UNCOVER SIGNS AND OTHER TRAFFIC CONTROL DEVICES INSTALLED IN PHASE II, STEP 1 AND CLOSE -Y2- NC 268 BUS AS NECESSARY TO SET GIRDERS. VERIFY OFF-SITE DETOUR IS IN PLACE PRIOR TO CLOSING NC 268 BUS.

- UPON COMPLETION OF PROPOSED BRIDGE CONSTRUCTION, USE OFF-SITE DETOUR SHOWN ON TMP-16 TO CLOSE -Y2- NC 268 BUS AND BEGIN -Y2- WIDENING AND DRAINAGE CONSTRUCTION.

STEP 3:

- USE FLAGGERS AND LANE CLOSURES AS NEEDED TO COMPLETE -Y2- WIDENING AND PERMANENT GUARDRAIL/BARRIER INSTALLATION.

- OPEN NC 268 BUS TO TRAFFIC IN FINAL PATTERN AND REMOVE ALL OFF-SITE DETOUR TRAFFIC CONTROL DEVICES.

- USING RSD 1101.02 SHEET 4, CONSTRUCT I-77 NB TIE-INS.

APPROVED: DocuSigned by: Zachary T Clark 9C4DA7F17F6D420...

DATE: 10/07/2025

SEAL

NORTH CAROLINA PROFESSIONAL SEAL 045090 ENGINEER ZACHARY T. CLARK

DOCUMENT NOT CONSIDERED FINAL UNLESS ALL SIGNATURES COMPLETED

DIVISION OF HIGHWAYS STATE OF NORTH CAROLINA DEPARTMENT OF TRANSPORTATION WORK ZONE TRAFFIC CONTROL

TEMPORARY TRAFFIC CONTROL PHASING

9/5/2025
P:\TIPProjects-B\B583\Traffic\TrafficControl\TCP\B-5831_TC_TMP_03.dgn
User:drdudley

PROJ. REFERENCE NO.	SHEET NO.
B-5831	TMP-3A

PHASING (CONT.)

BEFORE BEGINNING ANY WORK ACTIVITES THE CONTRACTOR SHALL INSTALL ALL NECESSARY SIGNS AND TRAFFIC CONTROL DEVICES. FIELD VERIFY LOCATIONS WITH RESIDENT ENGINEER PRIOR TO INSTALLATION.

ERADICATE EXISTING PAVEMENT MARKINGS WHICH CONFLICT WITH MARKINGS SHOWN IN THIS PLAN. REPLACE FADED OR WORN MARKINGS AS NEEDED DURING CONSTRUCTION TO MAINTAIN CLEAR DIRECTION TO THE TRAVELLING PUBLIC OR AS DIRECTED BY THE ENGINEER.

PAVEMENT WEDGING/BUILD UP SHALL BE PERFORMED IN SUCH A MANNER THAT PONDING OF WATER WILL NOT OCCUR IN OPEN TRAVEL LANES.

ALL DRAINAGE CONSTRUCTED UNDER LANE CLOSURES SHALL BE COMPLETED IN A SINGLE WORK PERIOD. TIME RESTRICTIONS MAY BE SUBJECT TO CHANGE TO ACCOMMODATE DRAINAGE CONSTRUCTION PER THE RESIDENT ENGINEER.

PHASE III

STEP 1:

- USING LANE CLOSURES AS NEEDED, INSTALL TEMPORARY PAVEMENT MARKINGS AND SIGNING IN THE FINAL TRAFFIC PATTERN ON I-77 NB AS SHOWN ON THE FINAL PAVEMENT MARKING AND SIGNING PLANS, SHIFT I-77 NB BRIDGE TRAFFIC TO THE FINAL TRAFFIC PATTERN, AND RELOCATE PCB ON I-77 NB TO:

  * -L- STA. 9+64 +/- TO -L- STA. 26+74 +/- AS SHOWN ON TMP-4 & TMP-5

  * -L- STA. 39+36 +/- TO -L- STA. 46+43 +/- AS SHOWN ON TMP-10

- BEHIND PCB, AND USING LANE CLOSURES AS NEEDED, REMOVE TEMPORARY PAVEMENT USED FOR MEDIAN CROSSOVER AND INSTALL CABLE BARRIER AND GUARDRAIL PER ROADWAY PLANS.

STEP 2:

- USING LANE CLOSURES AS NEEDED, REMOVE REMAINING PCB ON BOTH DIRECTIONS OF I-77 AND INSTALL TEMPORARY PAVEMENT MARKINGS IN THE FINAL PATTERN ON I-77 SB AS SHOWN ON THE FINAL PAVEMENT MARKING PLANS.

- REMOVE TRAFFIC CONTROL DEVICES ON SB US-21 BYP AND SHIFT I-77 SB TRAFFIC TO THE FINAL TRAFFIC PATTERN. REMOVE SIGNAGE AND OTHER TRAFFIC CONTROL DEVICES FOR SPEED LIMIT REDUCTION AND TEMPORARY MEDIAN CROSSOVER.

- USING 1101.02 SHEET 4, INSTALL FINAL LAYER OF SURFACE COURSE, INSTALL FINAL PAVEMENT MARKINGS PER FINAL PAVEMENT MARKING PLANS, AND CONSTRUCT GRAVEL DRIVE FOR LAW ENFORCEMENT AT -L- STA 25+75 +/- AS SHOWN ON ROADWAY PLANS.

STEP 3:

- REMOVE ALL REMAINING TRAFFIC CONTROL DEVICES AND OPEN ALL ROADS TO TRAFFIC.

DocuSigned by:
Zachary T Clark
9C4DA7E1FEED420...

APPROVED: Zachary T Clark

DATE: 10/07/2025

SEAL

NORTH CAROLINA PROFESSIONAL SEAL 045090 ENGINEER ZACHARY T. CLARK

DOCUMENT NOT CONSIDERED FINAL UNLESS ALL SIGNATURES COMPLETED

DIVISION OF HIGHWAYS · STATE OF NORTH CAROLINA · DEPARTMENT OF TRANSPORTATION · WORK ZONE TRAFFIC CONTROL

TEMPORARY TRAFFIC CONTROL PHASING (CONT.)

5/21/2025
P:\TIPProjects-B\B583\Traffic\TrafficControl\TCP\B-5831_TC_TMP_03A.dgn
User:drdudley

PROJ. REFERENCE NO.	SHEET NO.
B-5831	TMP-4

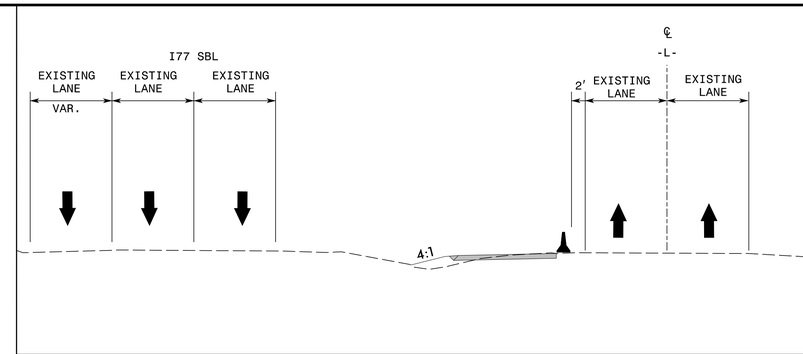

SECTION A1-A1 -L- STA. 15+00

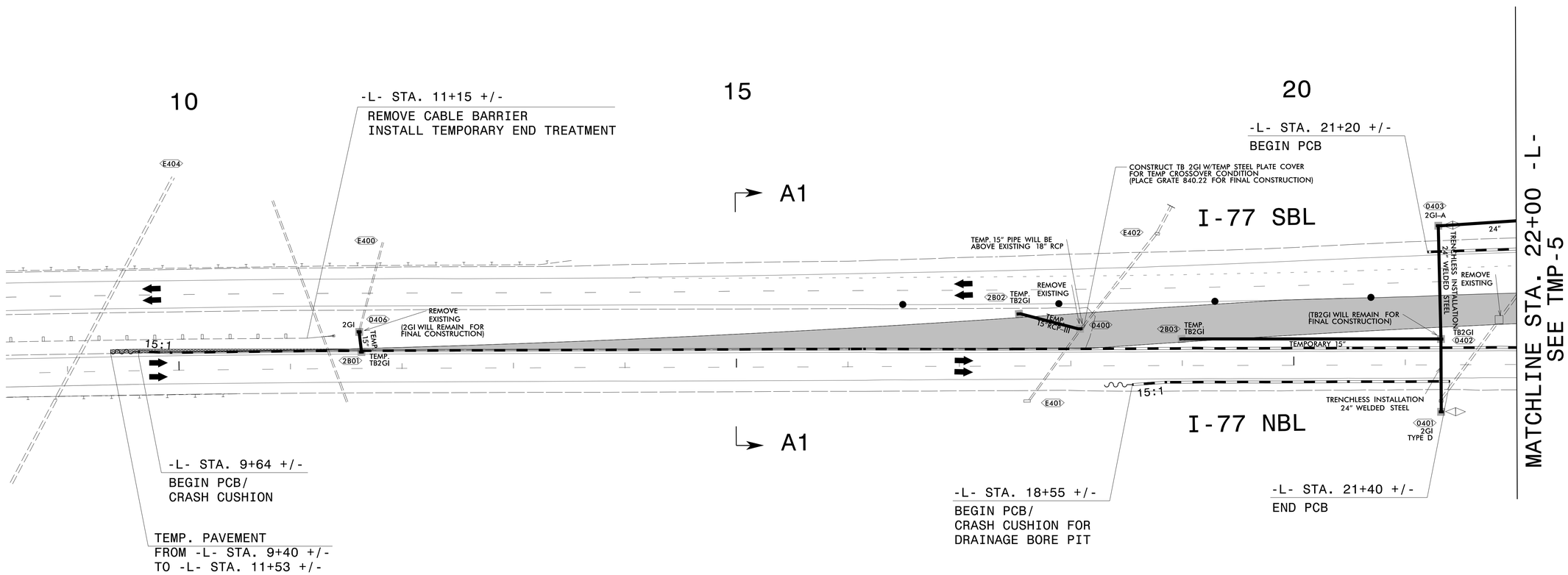

APPROVED: DocuSigned by: Zachary T Clark 9C4DA7F17F6D420...

DATE: 10/07/2025

SEAL

NORTH CAROLINA PROFESSIONAL SEAL 045090 ENGINEER ZACHARY T. CLARK

DIVISION OF HIGHWAYS STATE OF NORTH CAROLINA DEPARTMENT OF TRANSPORTATION WORK ZONE TRAFFIC CONTROL

DOCUMENT NOT CONSIDERED FINAL UNLESS ALL SIGNATURES COMPLETED

PHASE IA DETAILS

2/20/2025
P:\TIPProjects-B\B583\Traffic\TrafficControl\TCP\B-5831_TC_TMP_04.dgn
User:drdudley

PROJ. REFERENCE NO.	SHEET NO.
B-5831	TMP-5

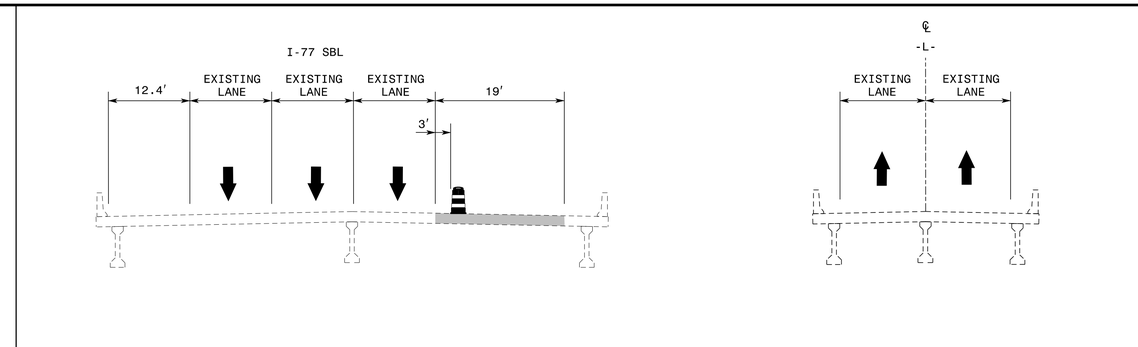

SECTION B1-B1 -L- STA. 32+50

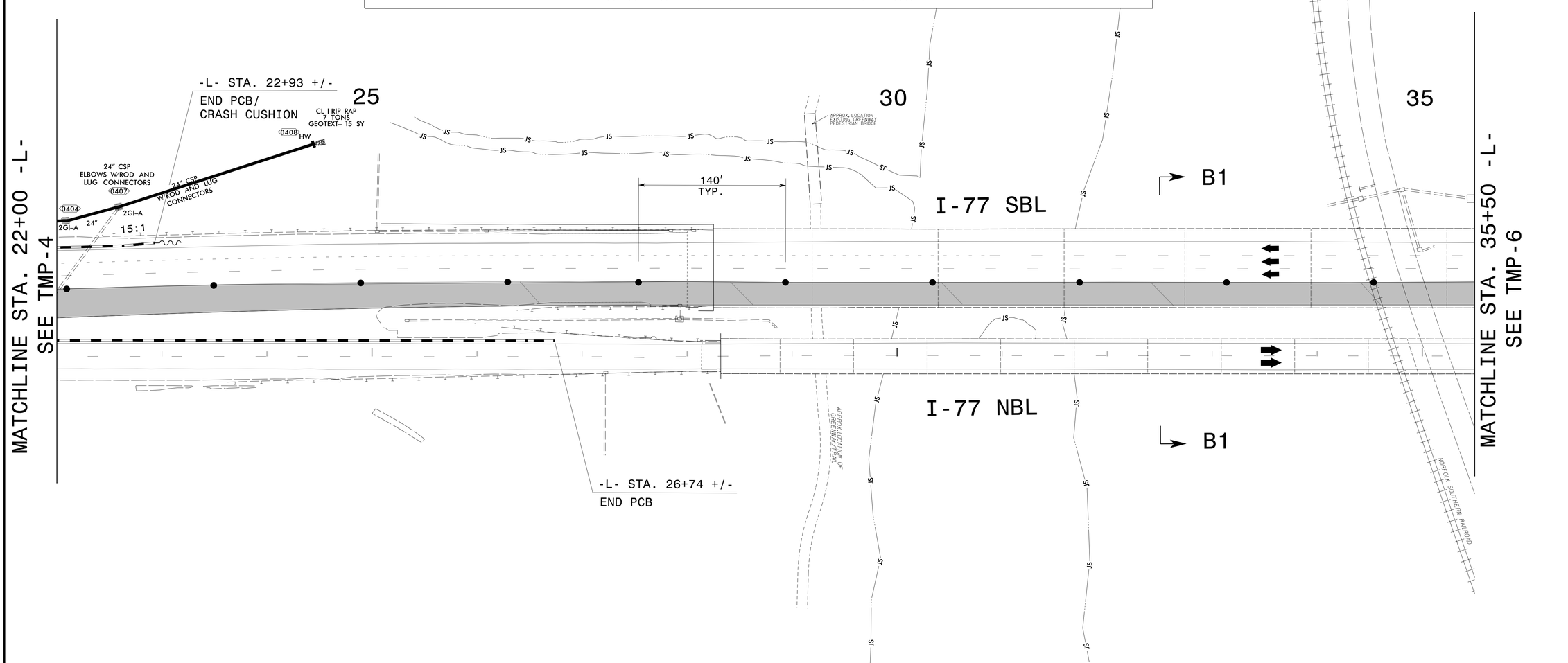

APPROVED: DocuSigned by: Zachary T Clark 9C4DA7F17F6D420...

DATE: 10/07/2025

SEAL

NORTH CAROLINA PROFESSIONAL SEAL 045090 ENGINEER ZACHARY T. CLARK

DIVISION OF HIGHWAYS STATE OF NORTH CAROLINA DEPARTMENT OF TRANSPORTATION WORK ZONE TRAFFIC CONTROL

DOCUMENT NOT CONSIDERED FINAL UNLESS ALL SIGNATURES COMPLETED

PHASE IA DETAILS

2/19/2025
P:\TIPProjects-B\B583\Traffic\TrafficControl\TCP\B-583_TC_TMP_05.dgn
User:rdudley

PROJ. REFERENCE NO.	SHEET NO.
B-5831	TMP-6

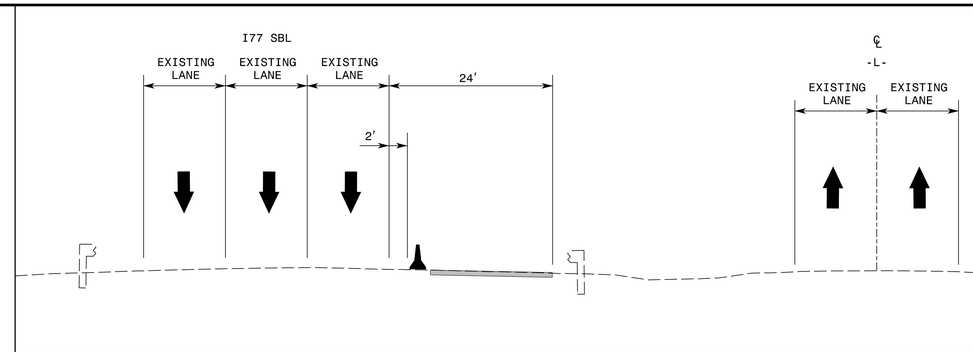

SECTION C1-C1 -L- STA. 38+00

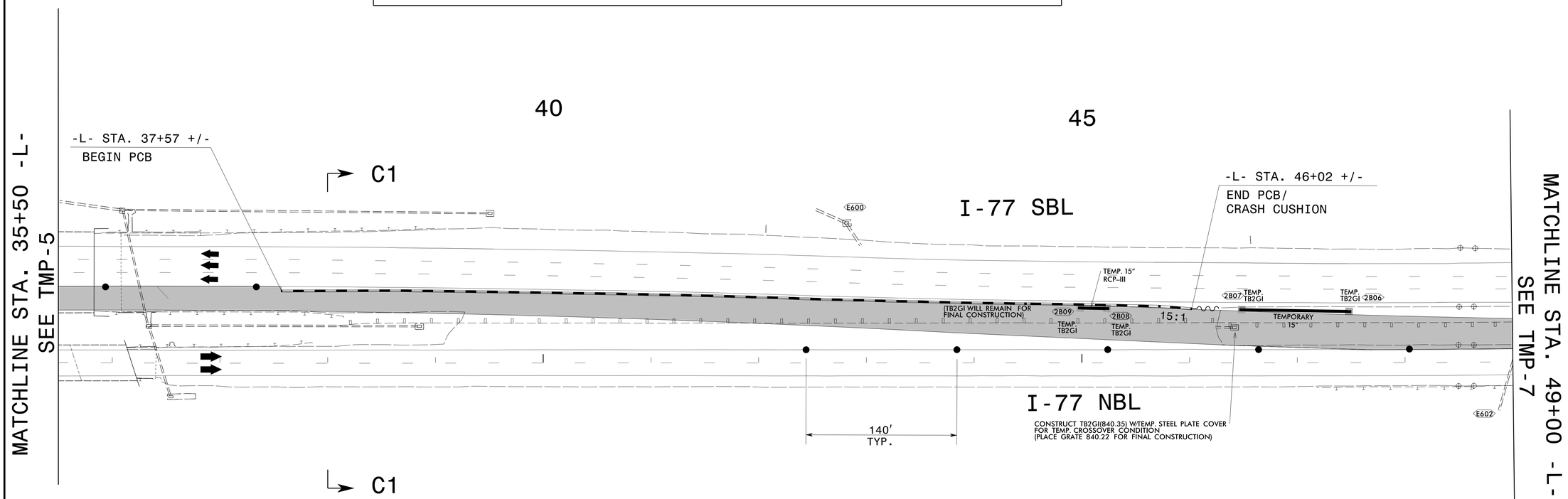

DocuSigned by:
APPROVED: Zachary T Clark
9C4DA7F17F6D420...

DATE: 10/07/2025

SEAL

NORTH CAROLINA PROFESSIONAL SEAL 045090 ENGINEER ZACHARY T. CLARK

DOCUMENT NOT CONSIDERED FINAL UNLESS ALL SIGNATURES COMPLETED

DIVISION OF HIGHWAYS
STATE OF NORTH CAROLINA
DEPARTMENT OF TRANSPORTATION
WORK ZONE TRAFFIC CONTROL

PHASE IA DETAILS

2/12/2025
P:\TIPProjects-B\B583\Traffic\TrafficControl\TCP\B-583_TC_TMP_06.dgn
User:rdudley

PROJ. REFERENCE NO.	SHEET NO.
B-5831	TMP-7

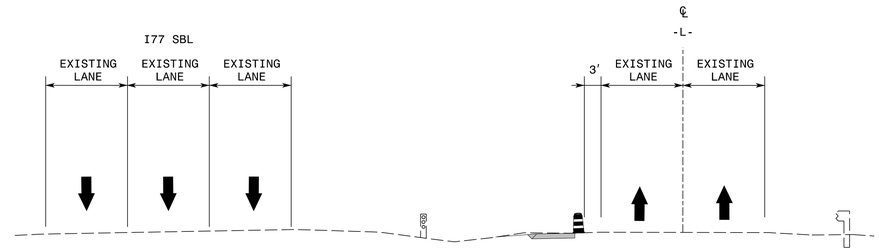

SECTION D1-D1 -L- STA. 55+00

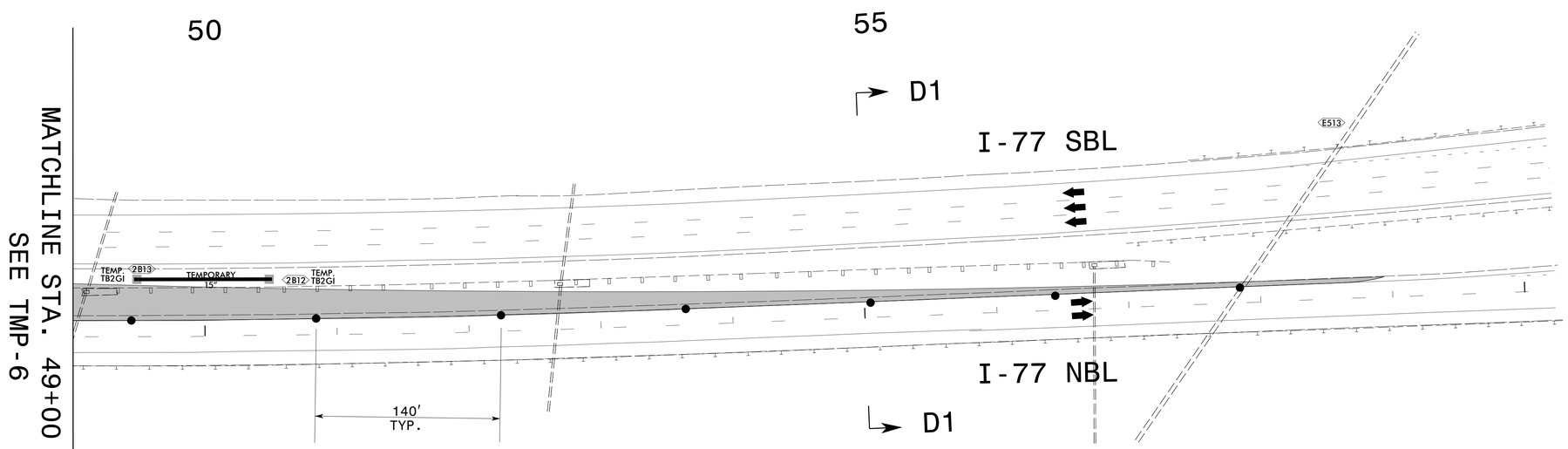

MATCHLINE STA. 49+00 -L-
SEE TMP-6

APPROVED: DocuSigned by: Zachary T Clark 9C4DA7F17F6D420...

DATE: 10/07/2025

SEAL

NORTH CAROLINA PROFESSIONAL SEAL 045090 ENGINEER ZACHARY T. CLARK

DOCUMENT NOT CONSIDERED FINAL UNLESS ALL SIGNATURES COMPLETED

DIVISION OF HIGHWAYS · STATE OF NORTH CAROLINA · DEPARTMENT OF TRANSPORTATION · WORK ZONE TRAFFIC CONTROL

PHASE IA DETAILS

2/12/2025
P:\TIPProjects-B\B583\Traffic\TrafficControl\TCP\B-5831_TC_TMP_07.dgn
User:drdudley

PROJ. REFERENCE NO.	SHEET NO.
B-5831	TMP-8

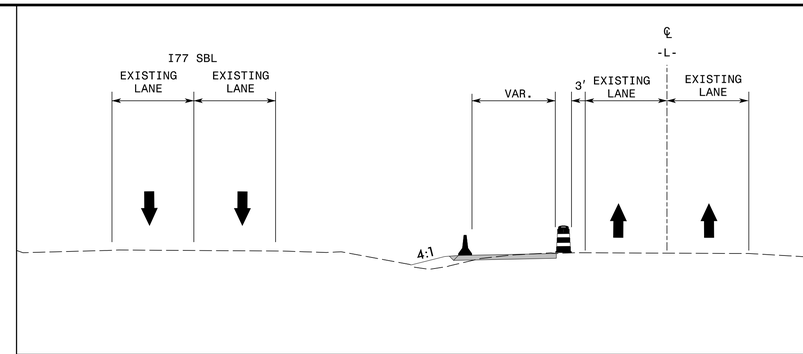

SECTION A2-A2 -L- STA. 15+00

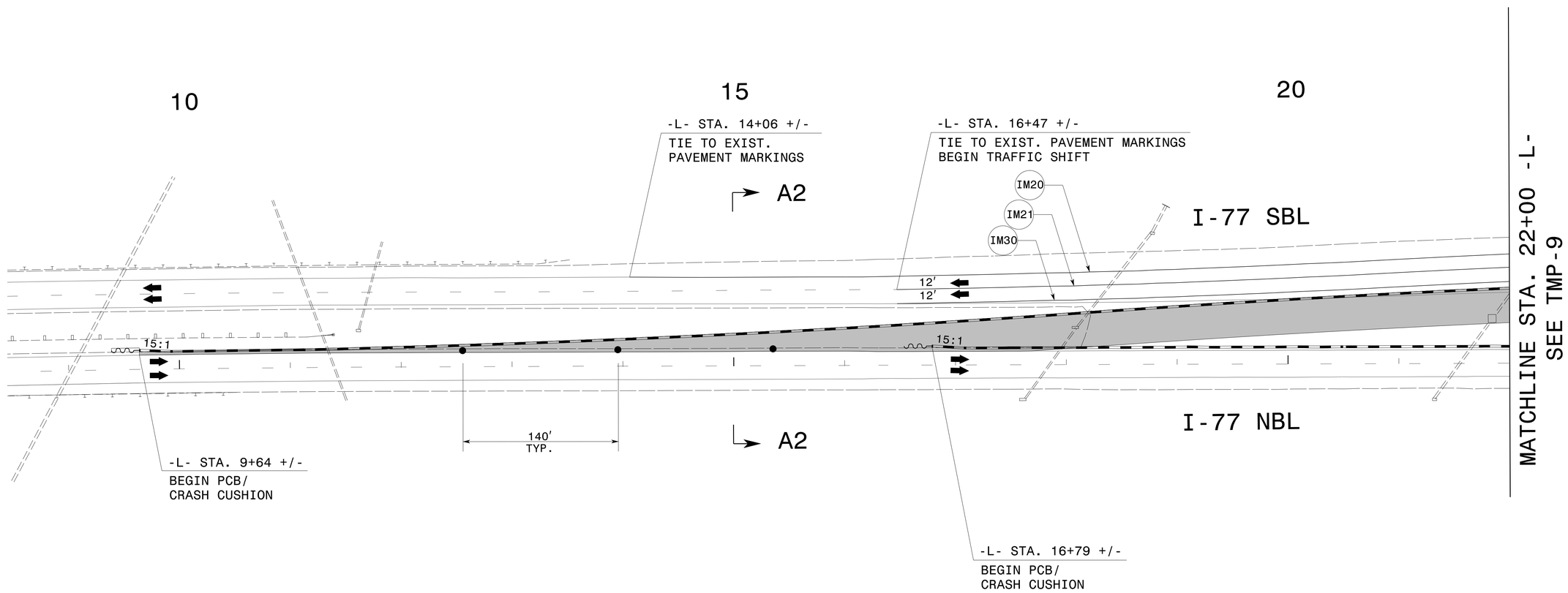

APPROVED: DocuSigned by: Zachary T Clark 9C4DA7F17F6D420...

DATE: 10/07/2025

SEAL

NORTH CAROLINA PROFESSIONAL SEAL 045090 ENGINEER ZACHARY T. CLARK

DIVISION OF HIGHWAYS STATE OF NORTH CAROLINA DEPARTMENT OF TRANSPORTATION WORK ZONE TRAFFIC CONTROL

DOCUMENT NOT CONSIDERED FINAL UNLESS ALL SIGNATURES COMPLETED

PHASE IB DETAILS

2/19/2025
P:\TIPProjects-B\B583\Traffic\TrafficControl\TCP\B-5831_TC_TMP_08.dgn
User:drdudley

PROJ. REFERENCE NO.	SHEET NO.
B-5831	TMP-9

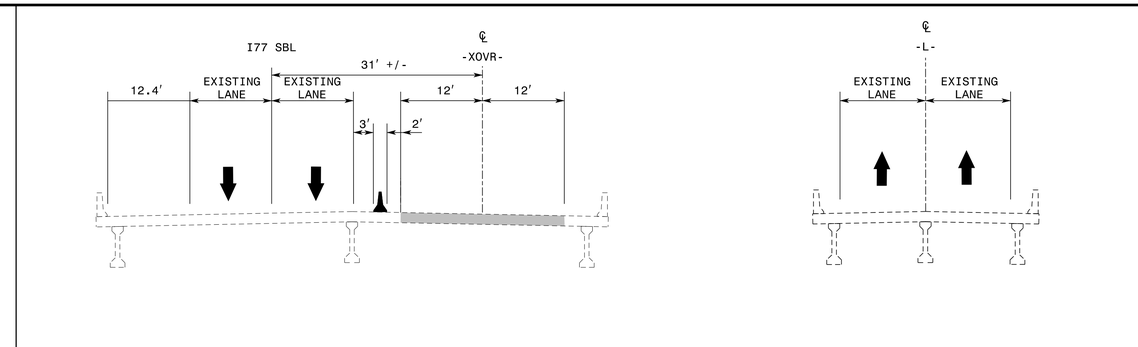

SECTION B2-B2 -L- STA. 32+50

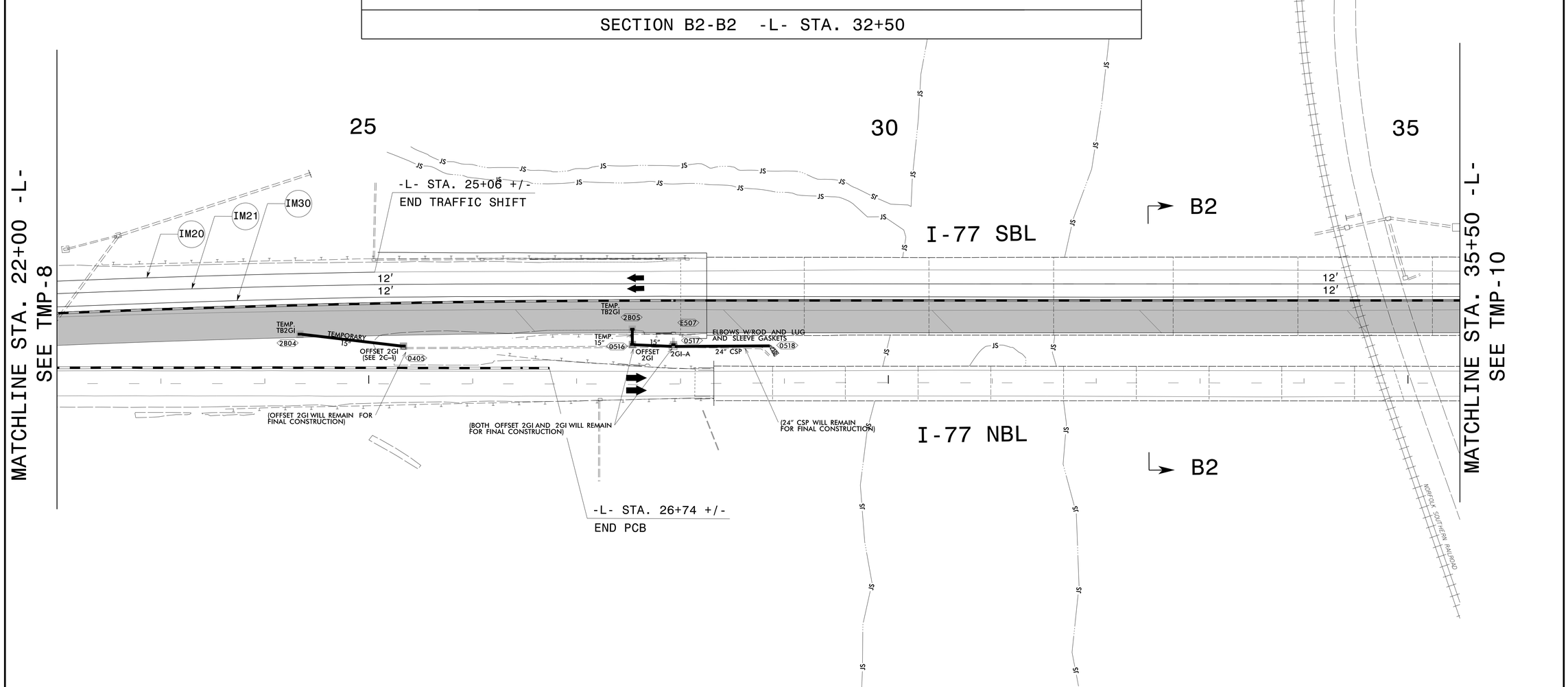

APPROVED: DocuSigned by: Zachary T Clark 9C4DA7F17F6D420...

DATE: 10/07/2025

SEAL

NORTH CAROLINA PROFESSIONAL SEAL 045090 ENGINEER ZACHARY T. CLARK

DIVISION OF HIGHWAYS STATE OF NORTH CAROLINA DEPARTMENT OF TRANSPORTATION WORK ZONE TRAFFIC CONTROL

DOCUMENT NOT CONSIDERED FINAL UNLESS ALL SIGNATURES COMPLETED

PHASE IB DETAILS

2/12/2025
P:\TIPProjects-B\B583\Traffic\TrafficControl\TCP\B-583_TC_TMP_09.dgn
User:rdudley

PROJ. REFERENCE NO.	SHEET NO.
B-5831	TMP-10

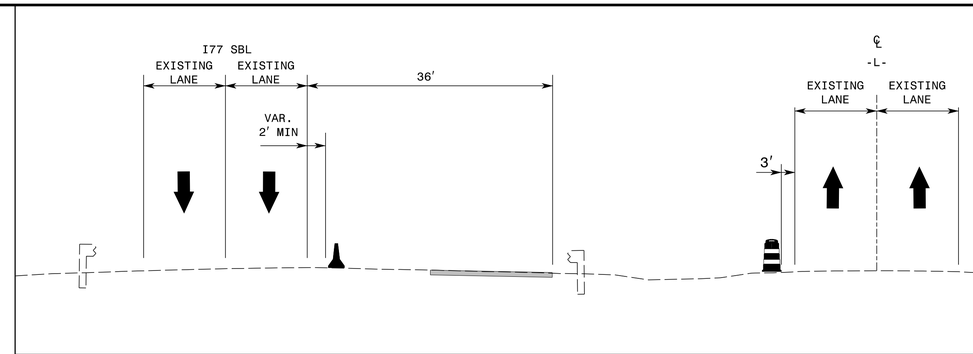

SECTION C2-C2 -L- STA. 38+00

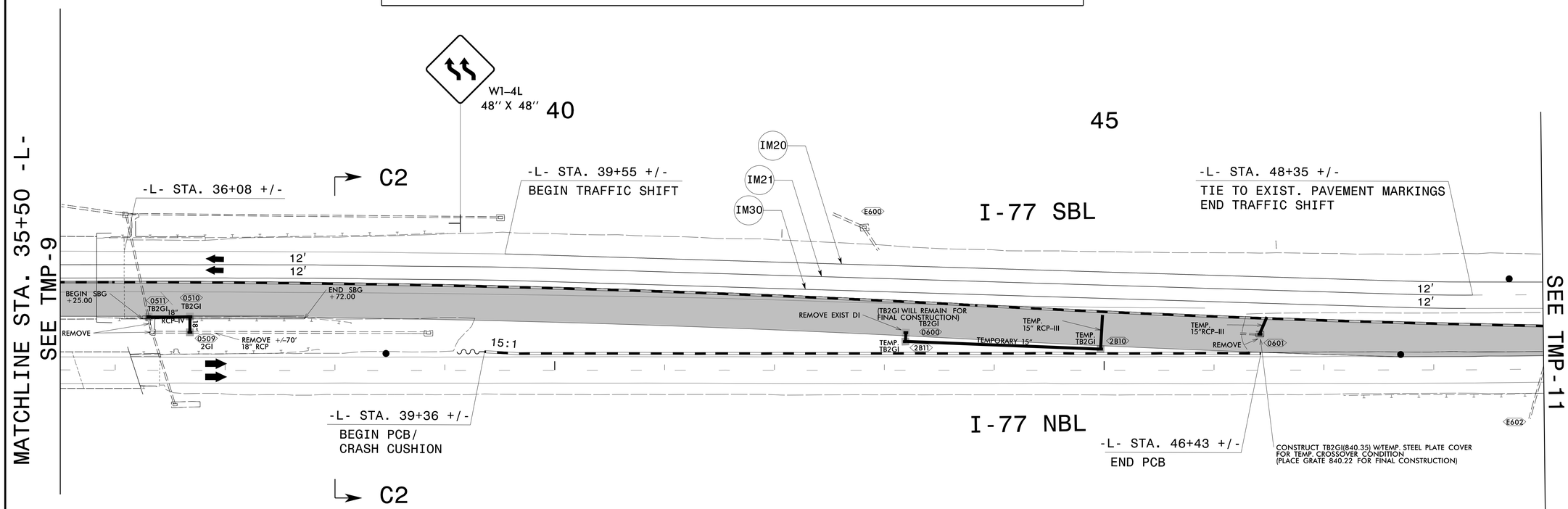

APPROVED: DocuSigned by: Zachary T Clark 9C4DA7F17F6D420...

DATE: 10/07/2025

SEAL

NORTH CAROLINA PROFESSIONAL SEAL 045090 ENGINEER ZACHARY T. CLARK

DOCUMENT NOT CONSIDERED FINAL UNLESS ALL SIGNATURES COMPLETED

DIVISION OF HIGHWAYS STATE OF NORTH CAROLINA DEPARTMENT OF TRANSPORTATION WORK ZONE TRAFFIC CONTROL

PHASE IB DETAILS

10/7/2025
P:\TIPProjects-B\B583\Traffic\TrafficControl\TCP\B-5831_TC_TMP_10.dgn
User:drdudley

PROJ. REFERENCE NO.	SHEET NO.
B-5831	TMP-11

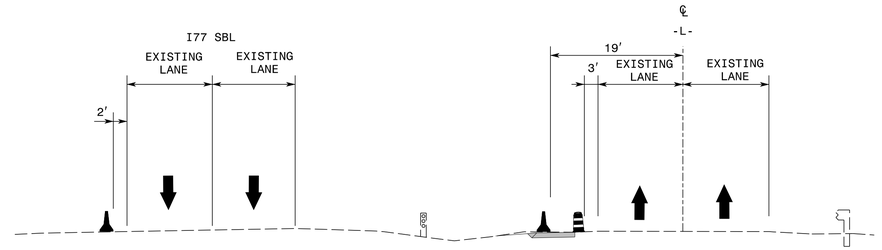

SECTION D2-D2 -L- STA. 55+00

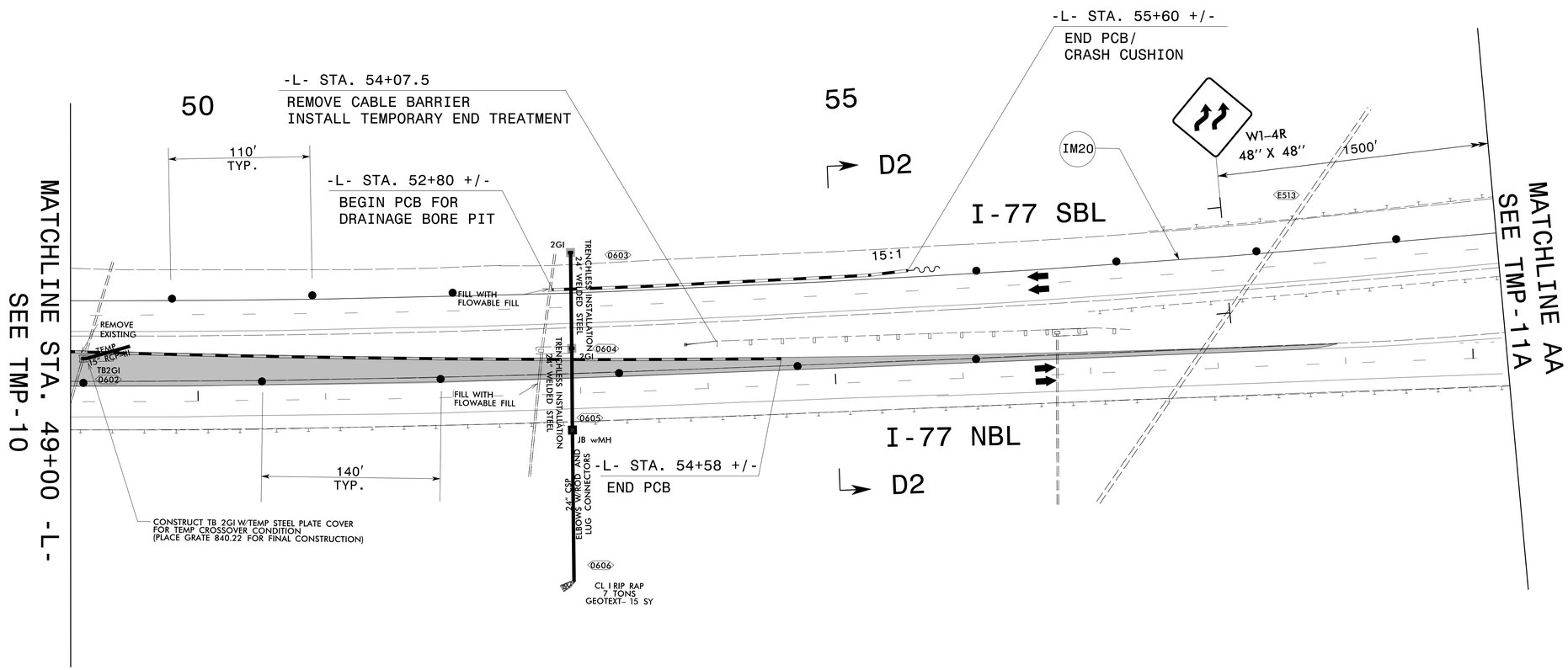

2/19/2025
R:\TIPProjects-B\B583\Traffic\TrafficControl\TCP\B-5831_TC_TMP_II.dgn
User:rdudley

APPROVED: DocuSigned by: Zachary T Clark 9C4DA7F17F6D420...

DATE: 10/07/2025

SEAL

NORTH CAROLINA PROFESSIONAL ENGINEER SEAL 045090 ZACHARY T. CLARK

DIVISION OF HIGHWAYS STATE OF NORTH CAROLINA DEPARTMENT OF TRANSPORTATION WORK ZONE TRAFFIC CONTROL

DOCUMENT NOT CONSIDERED FINAL UNLESS ALL SIGNATURES COMPLETED

PHASE IB DETAILS

PROJ. REFERENCE NO.	SHEET NO.
B-5831	TMP-11A

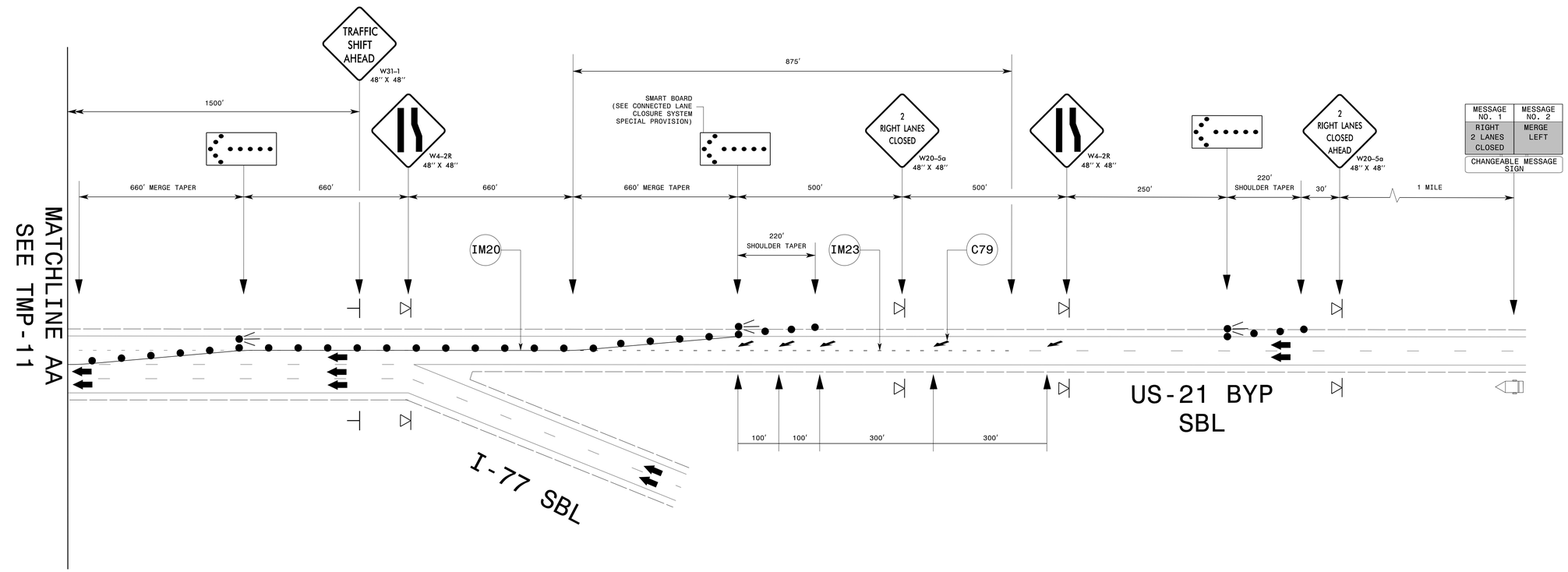

APPROVED: DocuSigned by: Zachary T Clark 9C4DA7F13F6D420...

DATE: 10/01/2025

SEAL

NORTH CAROLINA PROFESSIONAL SEAL 045090 ENGINEER ZACHARY T. CLARK

DIVISION OF HIGHWAYS STATE OF NORTH CAROLINA DEPARTMENT OF TRANSPORTATION WORK ZONE TRAFFIC CONTROL

DOCUMENT NOT CONSIDERED FINAL UNLESS ALL SIGNATURES COMPLETED

PHASE IB DETAILS - US-21 SBL LANE CLOSURE OVERVIEW

10/1/2025
P:\TIPProjects-B\B583\Traffic\TrafficControl\TCP\B-5831_TC_TMP_IIA.dgn
User:drdudley

PROJ. REFERENCE NO.	SHEET NO.
B-5831	TMP-12

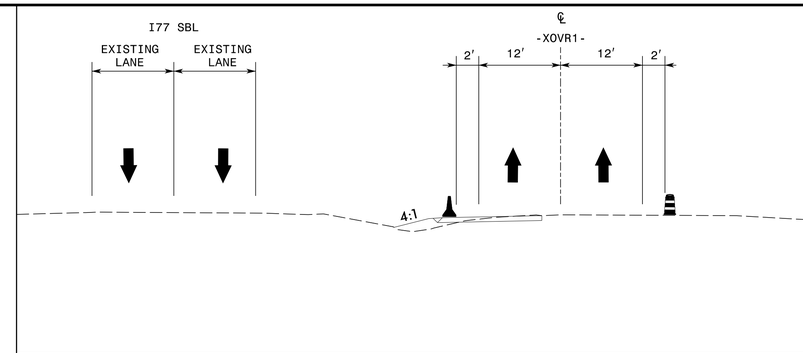

SECTION A3-A3 -L- STA. 15+00

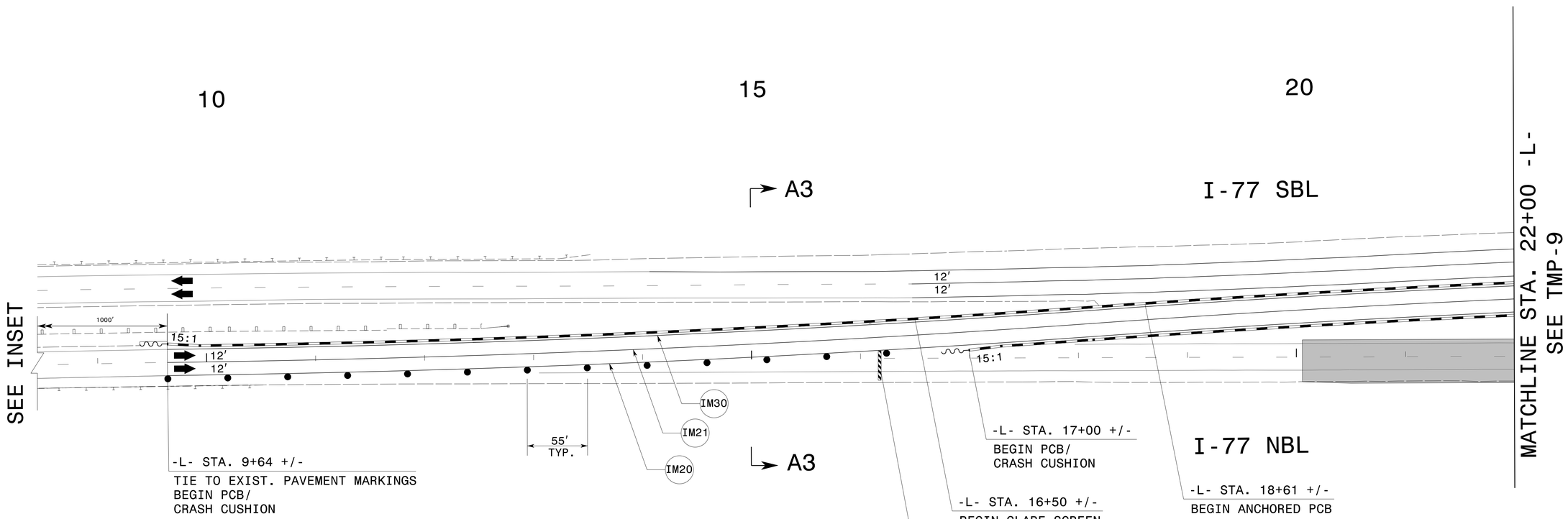

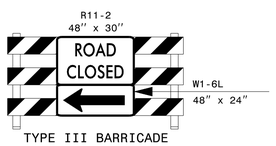

TYPE III BARRICADE

INSET

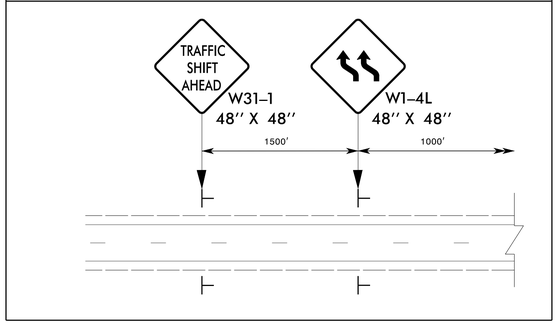

APPROVED: DocuSigned by: Zachary T Clark 9C4DA7F17F6D420...

DATE: 10/07/2025

SEAL

NORTH CAROLINA PROFESSIONAL SEAL 045090 ENGINEER ZACHARY T. CLARK

DOCUMENT NOT CONSIDERED FINAL UNLESS ALL SIGNATURES COMPLETED

DIVISION OF HIGHWAYS STATE OF NORTH CAROLINA DEPARTMENT OF TRANSPORTATION WORK ZONE TRAFFIC CONTROL

PHASE II DETAILS

2/12/2025
P:\TIPProjects-B\B583I\Traffic\TrafficControl\TCP\B-583I_TC_TMP_I2.dgn
User:drdudley

PROJ. REFERENCE NO.	SHEET NO.
B-5831	TMP-13

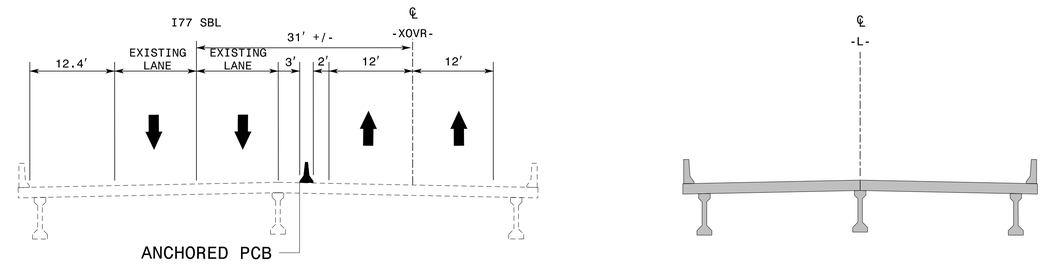

SECTION B3-B3 -L- STA. 32+50

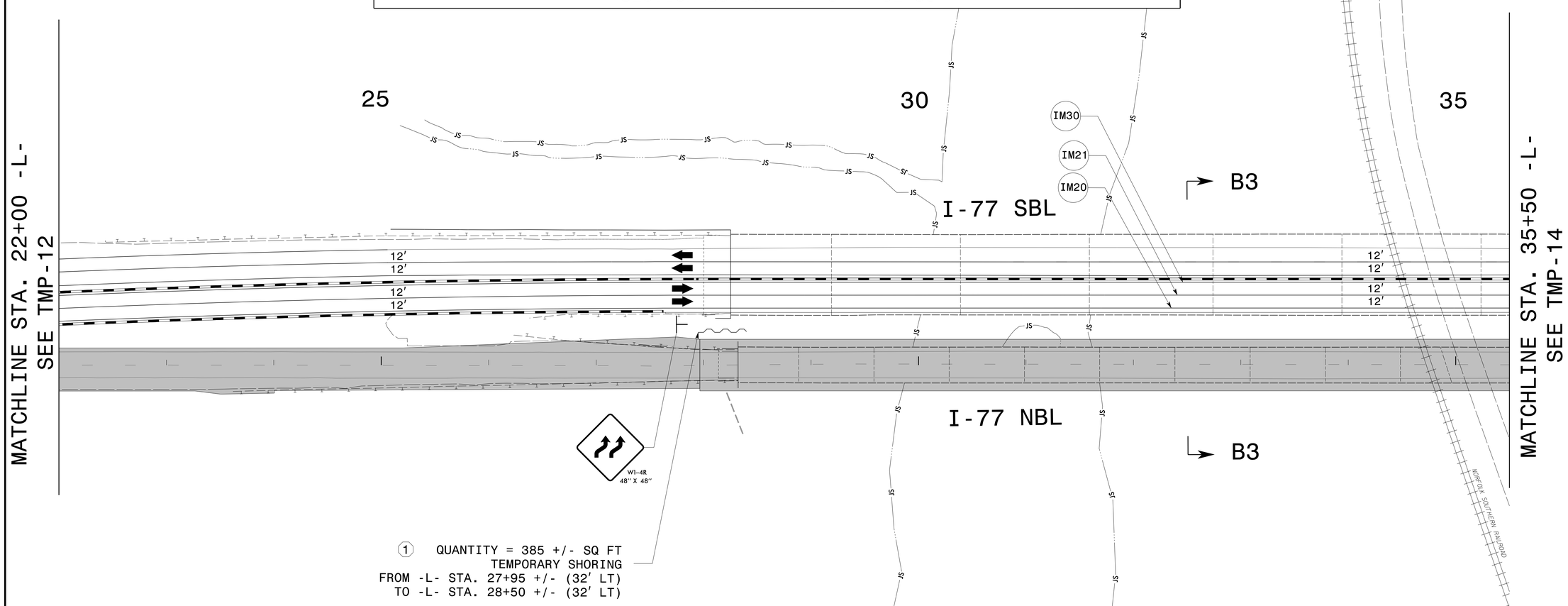

(1) QUANTITY = 385 +/- SQ FT
TEMPORARY SHORING
FROM -L- STA. 27+95 +/- (32' LT)
TO -L- STA. 28+50 +/- (32' LT)

APPROVED: DocuSigned by: Zachary T Clark 9C4DA7F17F6D420...

DATE: 10/07/2025

SEAL

NORTH CAROLINA PROFESSIONAL SEAL 045090 ENGINEER ZACHARY T. CLARK

DIVISION OF HIGHWAYS STATE OF NORTH CAROLINA DEPARTMENT OF TRANSPORTATION WORK ZONE TRAFFIC CONTROL

DOCUMENT NOT CONSIDERED FINAL UNLESS ALL SIGNATURES COMPLETED

PHASE II DETAILS

2/12/2025
P:\TIPProjects-B\B583\Traffic\TrafficControl\TCP\B-5831_TC_TMP_13.dgn
User:rdudley

PROJ. REFERENCE NO.	SHEET NO.
B-5831	TMP-14

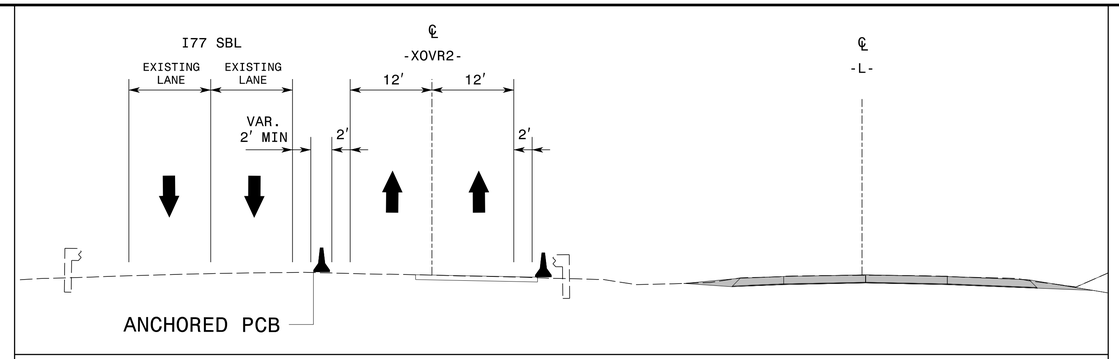

SECTION C3-C3 -L- STA. 38+00

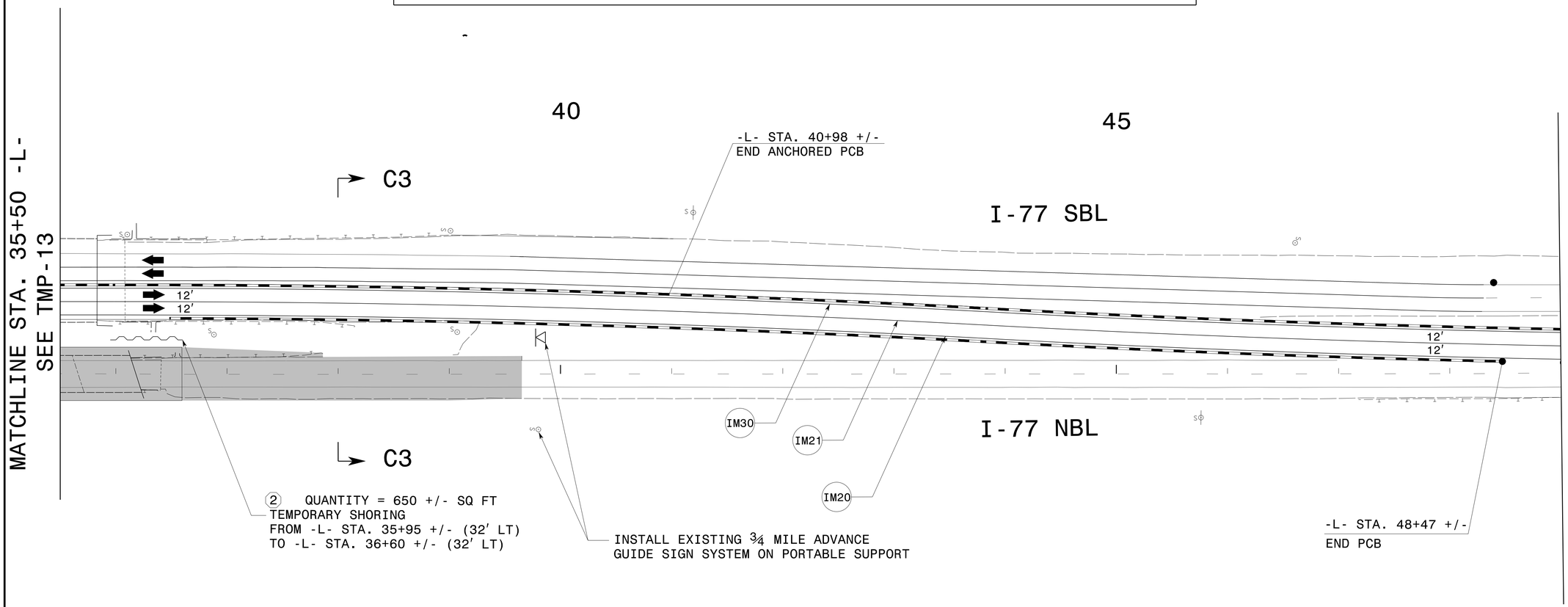

APPROVED: DocuSigned by: Zachary T Clark 9C4DA7F17F6D420...

DATE: 10/07/2025

SEAL

NORTH CAROLINA PROFESSIONAL SEAL 045090 ENGINEER ZACHARY T. CLARK

DOCUMENT NOT CONSIDERED FINAL UNLESS ALL SIGNATURES COMPLETED

DIVISION OF HIGHWAYS · STATE OF NORTH CAROLINA · DEPARTMENT OF TRANSPORTATION · WORK ZONE TRAFFIC CONTROL

PHASE II DETAILS

2/12/2025
P:\TIPProjects-B\B583\Traffic\TrafficControl\TCP\B-5831_TC_TMP_14.dgn
User:rdudley

PROJ. REFERENCE NO.	SHEET NO.
B-5831	TMP-15

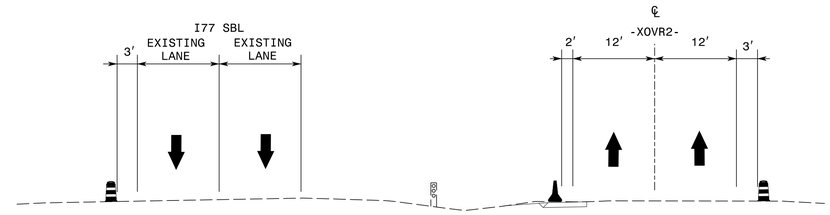

SECTION D3-D3 -L- STA. 55+00

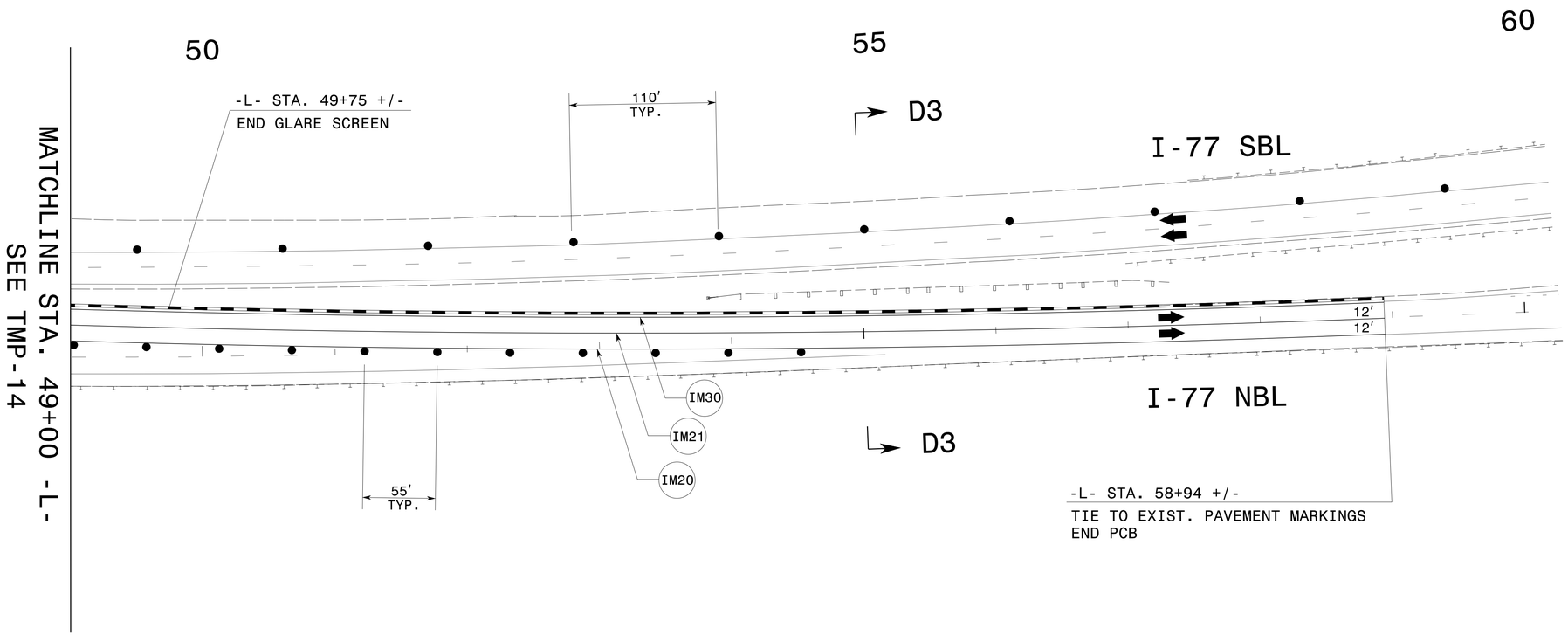

APPROVED: DocuSigned by: Zachary T Clark 9C4DA7F17F6D420...

DATE: 10/07/2025

SEAL

NORTH CAROLINA PROFESSIONAL SEAL 045090 ENGINEER ZACHARY T. CLARK

DOCUMENT NOT CONSIDERED FINAL UNLESS ALL SIGNATURES COMPLETED

DIVISION OF HIGHWAYS STATE OF NORTH CAROLINA DEPARTMENT OF TRANSPORTATION WORK ZONE TRAFFIC CONTROL

PHASE II DETAILS

2/12/2025
P:\TIPProjects-B\B583\Traffic\TrafficControl\TCP\B-5831_TC_TMP_I5.dgn
User:drdudley

PROJ. REFERENCE NO.	SHEET NO.
B-5831	TMP-16

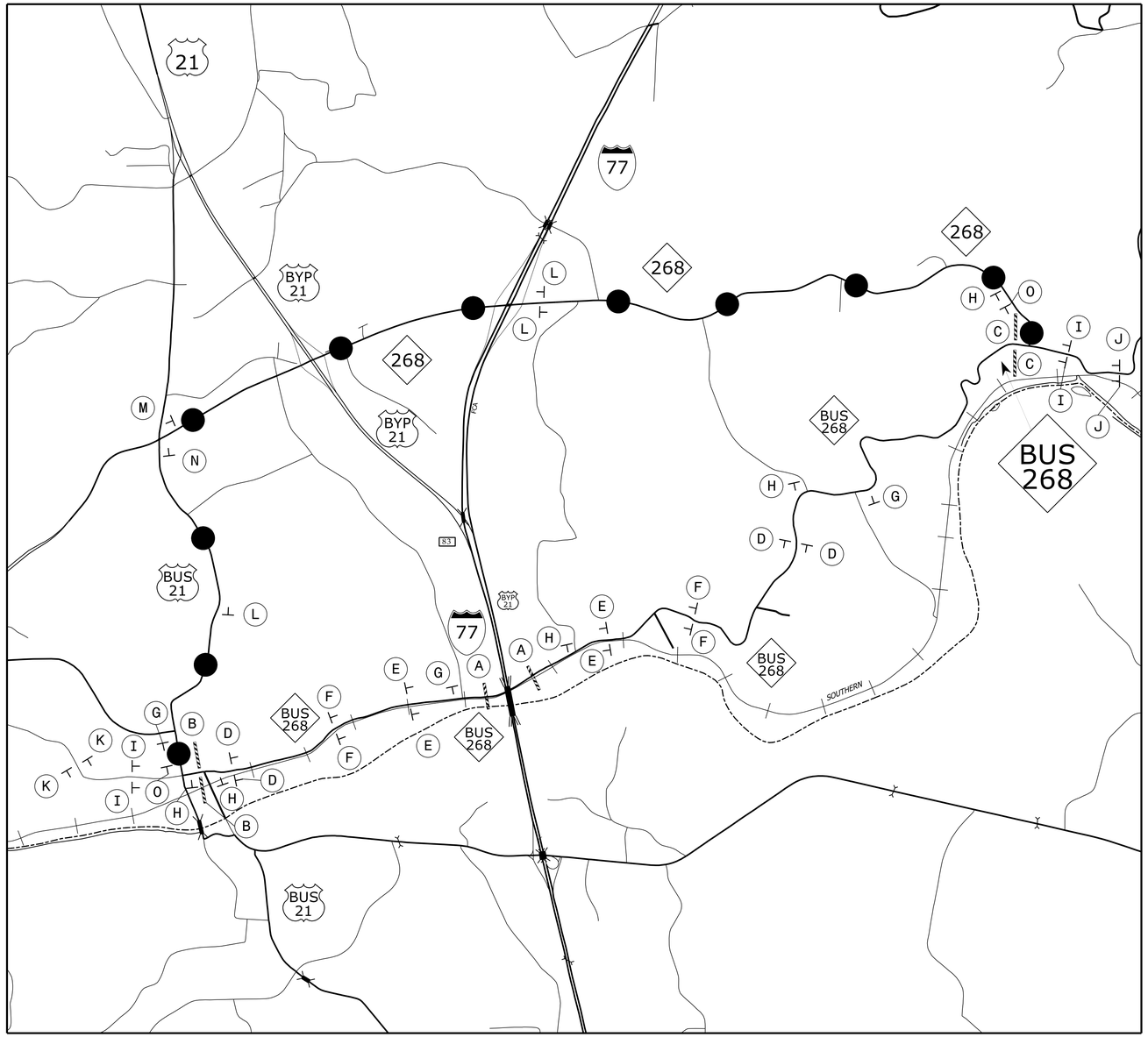

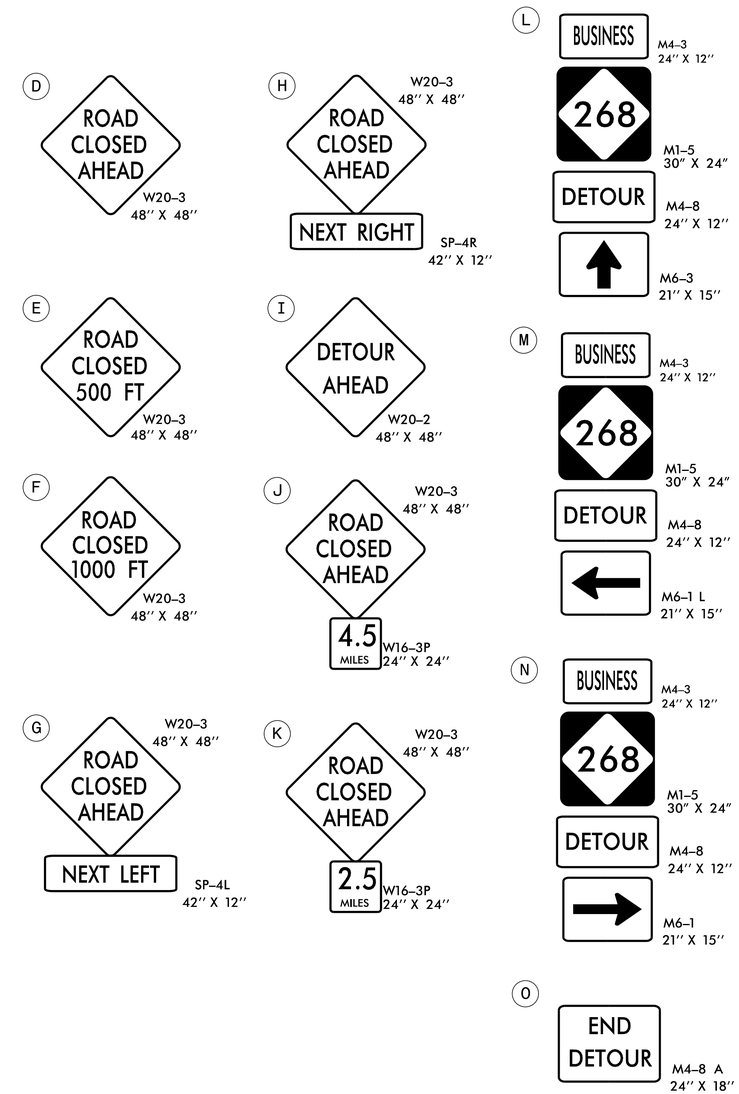

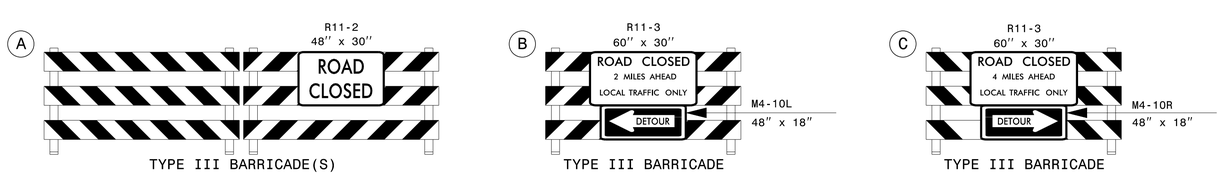

APPROVED: DocuSigned by: Zachary T Clark 9C4DA7F17F6D420...

DATE: 10/07/2025

SEAL

NORTH CAROLINA PROFESSIONAL SEAL 045090 ENGINEER ZACHARY T. CLARK

DIVISION OF HIGHWAYS STATE OF NORTH CAROLINA DEPARTMENT OF TRANSPORTATION WORK ZONE TRAFFIC CONTROL

DOCUMENT NOT CONSIDERED FINAL UNLESS ALL SIGNATURES COMPLETED

PHASE II OFF-SITE DETOUR

2/10/2025
P:\TIPProjects-B\B583\Traffic\TrafficControl\TCP\B-5831_TC_TMP_l6.dgn
User:drdudley