| PROJECT I.D. NO. | SHEET NO. |
|---|---|
| B-5985B | Sig.M4 |

NOTE:

1. OPENING IN POLE BASE PLATE SHALL BE EQUAL TO POLE BASE INSIDE DIAMETER MINUS 3½" BUT SHALL NOT BE LESS THAN 8½".

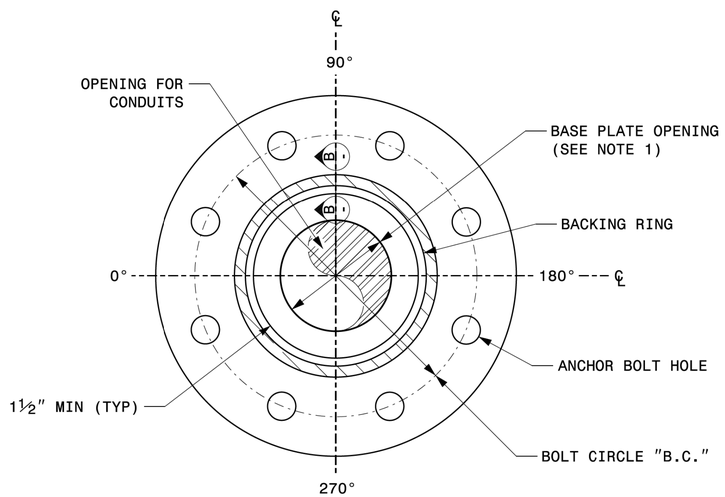


## SECTION A-A
## POLE BASE PLATE DETAILS

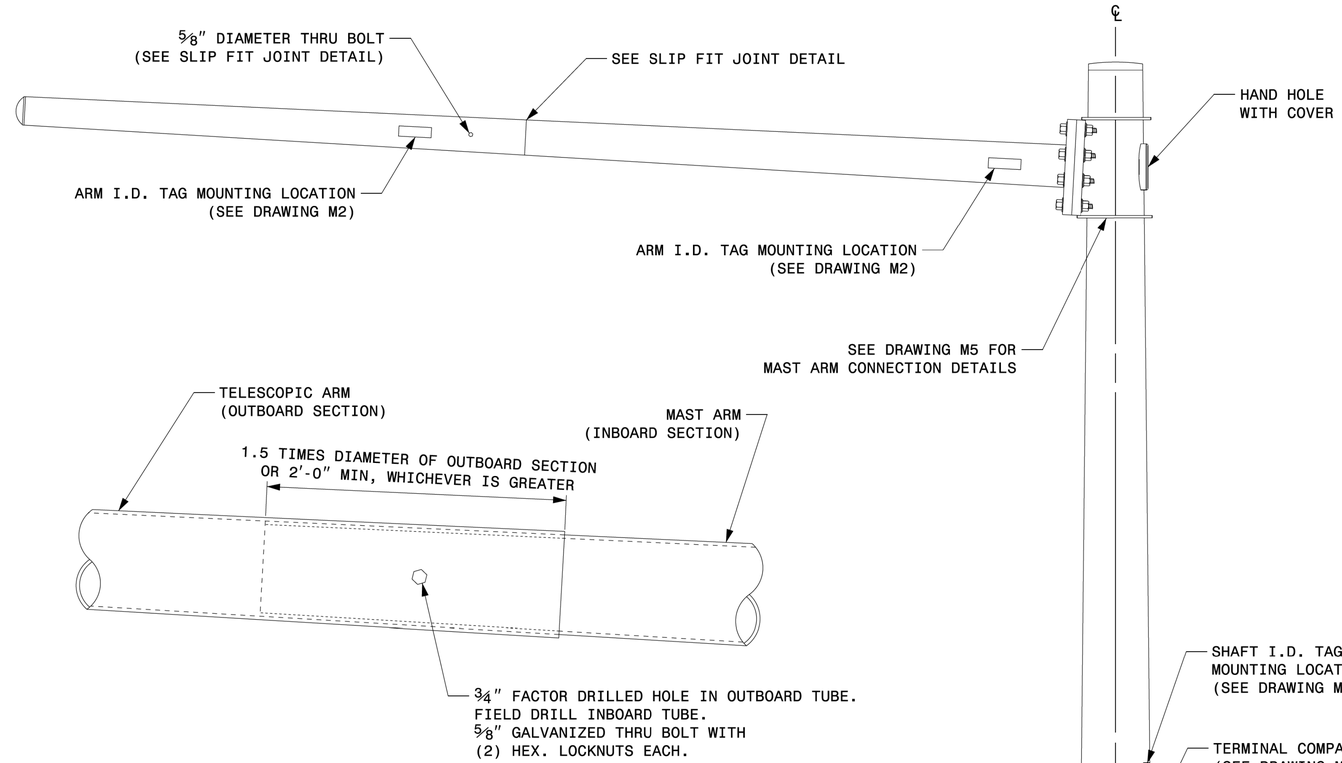


## SLIP FIT JOINT DETAIL FOR MAST ARM

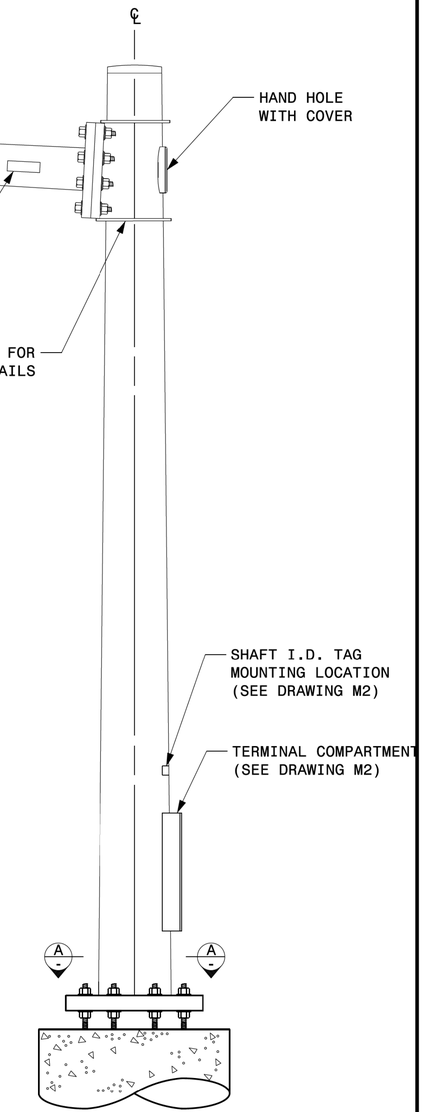


## MAST ARM POLE

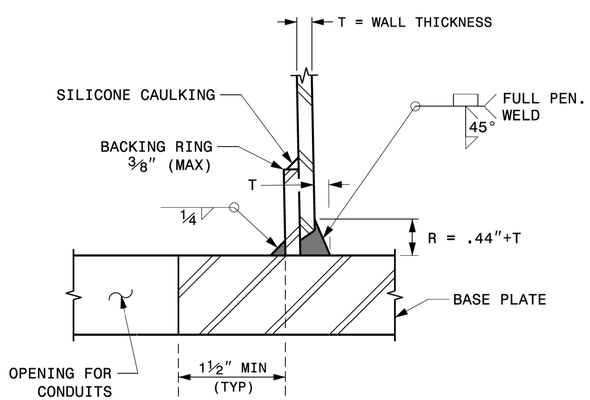


## SECTION B-B
(POLE ATTACHMENT TO BASE PLATE)

## FULL-PENETRATION GROOVE WELD DETAIL

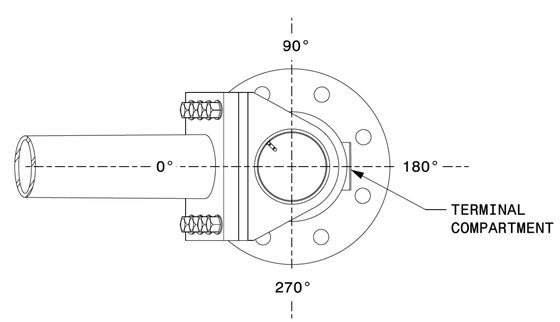


## MAST ARM RADIAL ORIENTATION

Prepared In the Offices of:
Transportation Mobility and Safety Division
STATE OF NORTH CAROLINA DEPARTMENT OF TRANSPORTATION
Signal Design Section
750 N.Greenfield Pkwy,Garner,NC 27529

SCALE 0 NA
NONE

Typical Fabrication Details For Mast Arm Poles

| | | | |
|---|---|---|---|
| PLAN DATE: | SEPTEMBER 2023 | DESIGNED BY: | K.C. DURIGON |
| PREPARED BY: | K.C. DURIGON | REVIEWED BY: | D.C. SARKAR |

| REVISIONS | INIT. | DATE |
|---|---|---|
| | | |

SEAL
NORTH CAROLINA PROFESSIONAL SEAL 036626 ENGINEER KEVIN C. DURIGON

DocuSigned by:
Kevin Durigon
4B23DC79B3784D0...
SIGNATURE
09/21/2023
DATE

# Fabrication Details – Mast Arm Poles

03-OCT-2023 12:35
S:\TIS\SUNITS\Signals\Signal Design Section\Structures\Drawings\2024 Metal Pole Std Drawings for LRFD\M2024 Sig.M4 Std. Fabrication Details-Mast Arm Poles.dgn
kcdurigon