PROJECT REFERENCE NO.	SHEET NO.
B-5985B	E-2

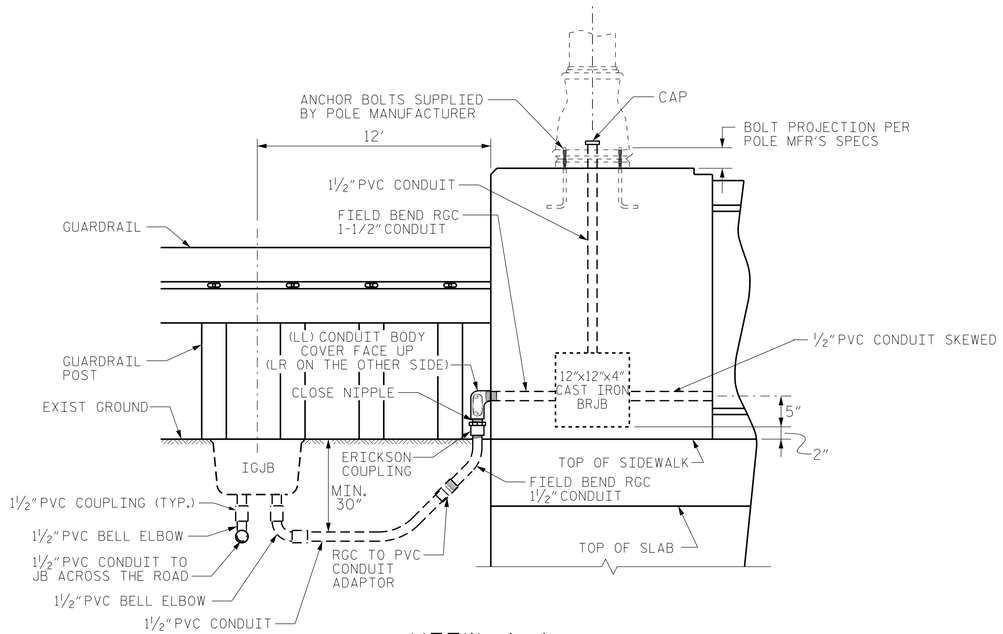

VIEW A-A

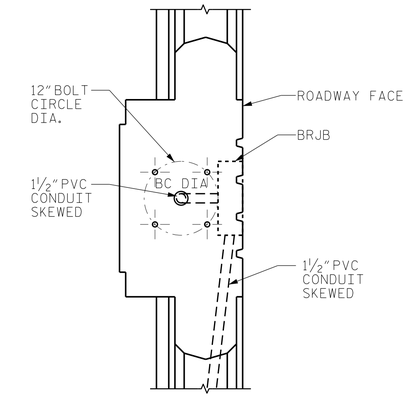

VIEW E-E

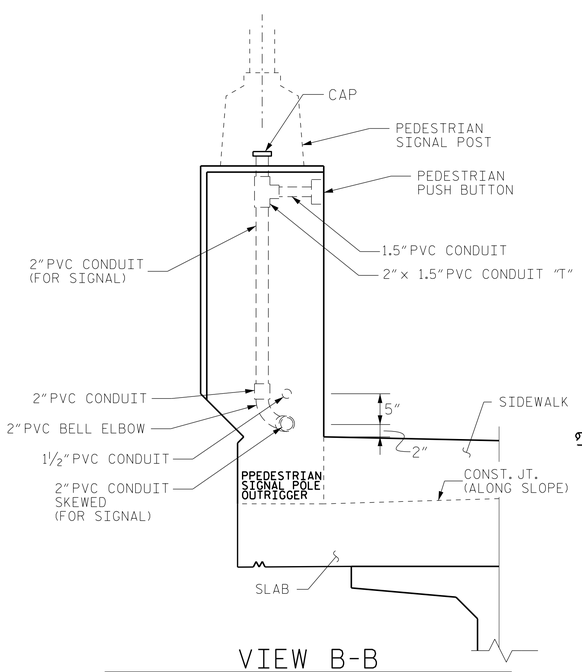

VIEW B-B
PEDESTRIAN SIGNAL POST PILASTER

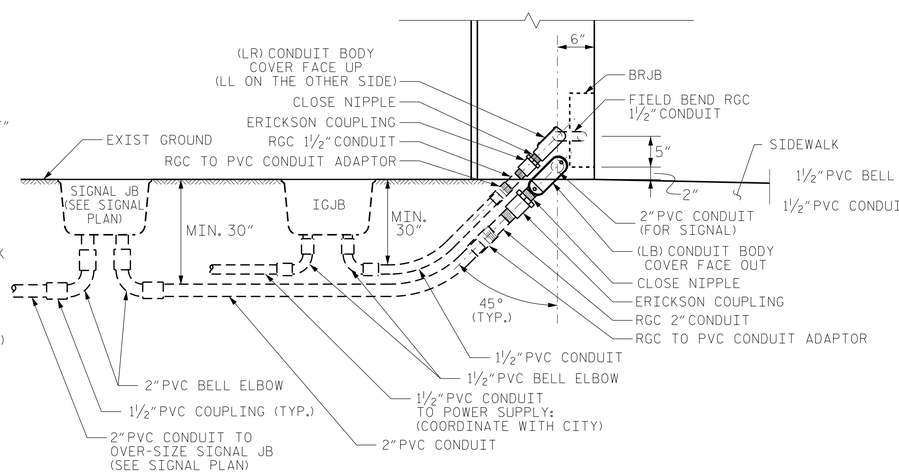

VIEW C-C

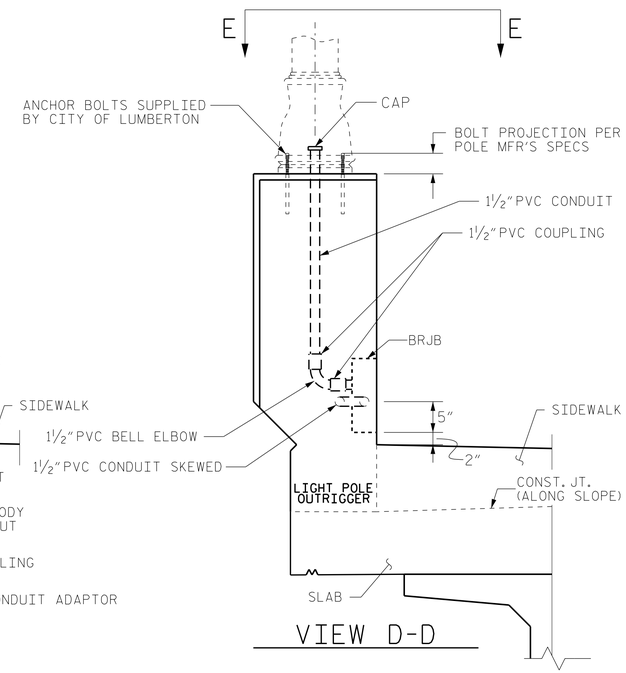

VIEW D-D

R. G. HALL

DRAWN BY :	S. A. MALIK	DATE :	12-16-24
CHECKED BY :	R. G. HALL	DATE :	12-16-24
DESIGN E.O.R. :	--	DATE :	--

DOCUMENT NOT CONSIDERED FINAL UNLESS ALL SIGNATURES COMPLETED

NORTH CAROLINA PROFESSIONAL SEAL 055078 ENGINEER NATHAN P DOMINGUEZ

DocuSigned by: Nathan Dominguez 4C60B959AA58434... 01/22/2025

STATE OF NORTH CAROLINA
DEPARTMENT OF TRANSPORTATION
RALEIGH

BRIDGE #175 OVER LUMBER RIVER ON W. 5TH STREET BETWEEN SR-1599 AND N. WATER STREET

REVISIONS								SHEET NO.
NO.	BY:	DATE:	DESCRIPTION OF REVISION	NO.	BY:	DATE:	DESCRIPTION OF REVISION	-
01				23				TOTAL SHEETS -

02/03/98
22-JAN-2025 09:32
Lighting_Design_B-5985B_DRMP Submittal\B5985B_LTG_Bridge_No_175.dgn
Sean.Lynn@AECOM.com