Docusign Envelope ID: 34026098-C85D-4320-BF75-EB39A5EF5C71

5/14/99

PROJECT TYPICAL DETAILS

Stantec
Stantec Consulting Services Inc.
521 E. Morehead St
Suite 425
Charlotte, NC 28202
Tel. (704) 329-0900
Fax. (704) 329-0905
www.stantec.com
License No. F-0672

PROJECT REFERENCE NO.	SHEET NO.
W-5710X	UC-3G
DESIGNED BY: TK	
DRAWN BY: TK	
CHECKED BY: XMD	
APPROVED BY:	
REVISED:	
NORTH CAROLINA DEPARTMENT OF TRANSPORTATION	
UTILITIES ENGINEERING SEC. PHONE:(919)707-6690 FAX:(919)250-4151	UTILITY CONSTRUCTION PLANS ONLY

NORTH CAROLINA PROFESSIONAL SEAL 034415 ENGINEER XIAOLIN DENG
Signature: Xiaolin Deng
Date: 8/7/2025

UTILITY CONSTRUCTION

DOCUMENT NOT CONSIDERED FINAL UNLESS ALL SIGNATURES COMPLETED

TRANSYSTEMS
1 Glenwood Avenue
Raleigh, NC 27603
Tel:919.789.9977
Fax:919.789.9591
License: F-0453

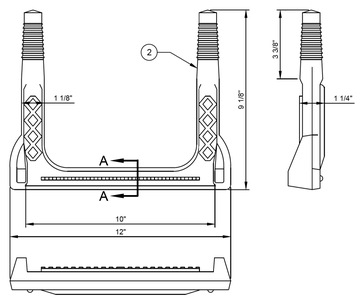

PLASTIC STEP

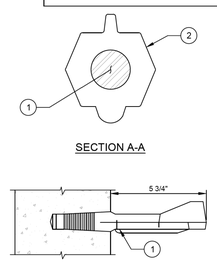

SECTION A-A

SIDE VIEW OF STEP IN MANHOLE WALL

NO.	DESCRIPTION:
1.	1/2" GRADE 60 STEEL REINFORCEMENT.
2.	COPOLYMER POLYPROPYLENE PLASTIC.

NOTES:

A. MANHOLES STEPS SHALL BE MODEL PS1-PF OR PS1-PF-DF AS MANUFACTURED BY MA INDUSTRIES - OR - ML-10-NCR BY AMERICAN STEP COMPANY - OR - 93810R BY BOWCO INDUSTRIES.

B. STEPS MAY BE BLACK, ORANGE, OR GLOW IN THE DARK.

C. STEPS ARE TO BE DRIVEN INTO TAPERED HOLES IN PRECAST MANHOLE SECTIONS. DO NOT USE AS A GROUTED-IN STEP.

D. MIN. RUNG WIDTH IS 10".

E. 1,000 LB. PULL OUT TEST REPORT REQUIRED ON EACH STEP.

CHARLOTTE WATER
CHARLOTTE WATER STANDARD DETAILS
GRAVITY SEWER

PLASTIC STEP PRECAST FORMED HOLE DRIVEN IN PLACE

NO SCALE | VERSION 2.0 | DATE 01/2025 | DETAIL 11.2.13

U.S. FOUNDRY & MFG. CORP.

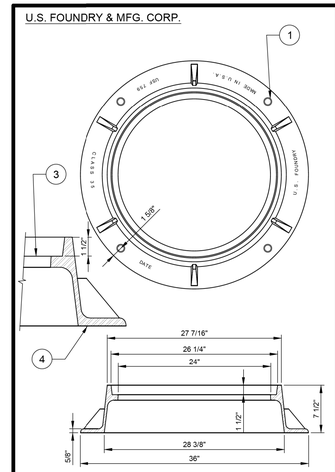

WEIGHT - 170 LB. MIN., 0% MINUS TOLERANCE

EJ (EJ GROUP, INC.)

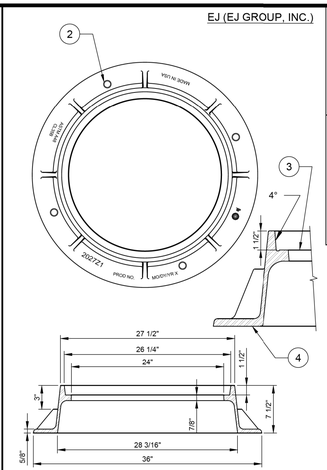

WEIGHT - 173 LB. MIN., 0% MINUS TOLERANCE

NO.	DESCRIPTION:
1.	(4) - 1 INCH DIAMETER ANCHOR HOLES ON A 32 $\frac{3}{4}$" DIAMETER B.C.D.
2.	(4) - 1 INCH DIAMETER ANCHOR HOLES ON A 31" DIAMETER B.C.D.
3.	MACHINED SURFACE.
4.	FRAME.

NOTES:

A. LOAD RATING - HEAVY DUTY.

B. MATERIAL - ASTM A48 - CLASS 35 GRAY IRON.

C. COATING - UNDIPPED.

D. FRAME SHALL CONFORM TO DIMENSION AND WEIGHT REQUIREMENTS.

E. FRAME SHALL NOT BE OUT OF ROUND.

CHARLOTTE WATER
CHARLOTTE WATER STANDARD DETAILS
GRAVITY SEWER

TYPE A MANHOLE FRAME 24-INCHES DIAMETER (CLEAR OPENING) 7 1/2-INCHES TALL

NO SCALE | VERSION 1.0 | DATE 04/2024 | DETAIL 11.3.1

U.S. FOUNDRY & MFG. CORP.

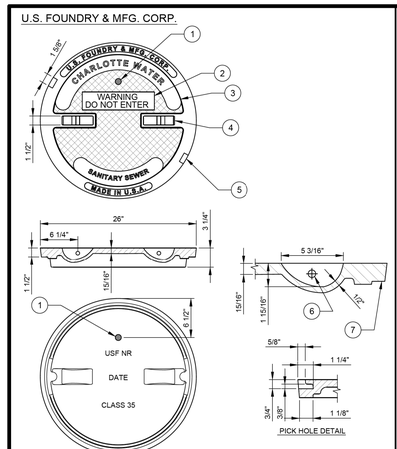

PICK HOLE DETAIL

WEIGHT - 150 LB. MIN., 0% MINUS TOLERANCE

EJ (EJ GROUP, INC.)

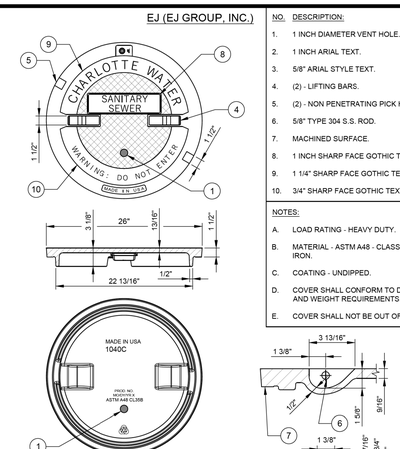

PICK HOLE DETAIL

WEIGHT - 145 LB. MIN., 0% MINUS TOLERANCE

NO.	DESCRIPTION:
1.	1 INCH DIAMETER VENT HOLE.
2.	1 INCH ARIAL TEXT.
3.	5/8" ARIAL STYLE TEXT.
4.	(2) - LIFTING BARS.
5.	(2) - NON PENETRATING PICK HOLES.
6.	5/8" TYPE 304 S.S. ROD.
7.	MACHINED SURFACE.
8.	1 INCH SHARP FACE GOTHIC TEXT.
9.	1 1/4" SHARP FACE GOTHIC TEXT.
10.	3/4" SHARP FACE GOTHIC TEXT.

NOTES:

A. LOAD RATING - HEAVY DUTY.

B. MATERIAL - ASTM A48 - CLASS 35 GRAY IRON.

C. COATING - UNDIPPED.

D. COVER SHALL CONFORM TO DIMENSION AND WEIGHT REQUIREMENTS.

E. COVER SHALL NOT BE OUT OF ROUND.

CHARLOTTE WATER
CHARLOTTE WATER STANDARD DETAILS
GRAVITY SEWER

TYPE 1 MANHOLE COVER 24-INCHES DIAMETER (CLEAR OPENING) VENTED-ONE VENT HOLE, NO GASKET, NO CAM LOCK

NO SCALE | VERSION 1.0 | DATE 04/2024 | DETAIL 11.3.5

STREET VIEW - GRAVITY SEWER TRACER WIRE

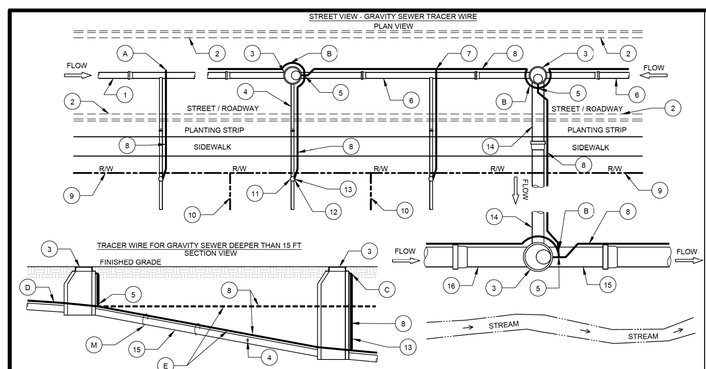

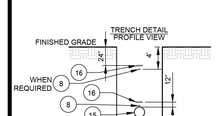

NO.	DESCRIPTION:
1.	EXISTING SEWER MAIN LINE WITHOUT TRACER WIRE.
2.	CURB.
3.	SEWER MANHOLE (TYP.).
4.	SEWER SERVICE LATERAL (TYP.).
5.	NO SPLICE.
6.	SEWER MAIN LINE.
7.	SPLICE (SEE CLTW STD. DETAIL).
8.	#12 GAUGE SOLID COPPER TRACER WIRE WITH 30 MILS GREEN HDPE INSULATION (TYP.).
9.	R/W / EASEMENT LINE (TYP.).
10.	PROPERTY / EASEMENT LINE.
11.	CLEANOUT (TYP.).
12.	VALVE BOX ASSEMBLY (TYP.) (SEE CLTW STD. DETAIL).
13.	CONDUIT FOR VERTICAL WIRE
14.	SEWER TRUNK LINE.
15.	SEWER PIPE.
16.	6" WIDE GREEN SEWER WARNING TAPE.

NOTES:

A. FOR NEW SERVICE ON EXISTING MAIN WHERE NO TRACER WIRE IS LOCATED ON SEWER MAIN, PLACE TRACER WIRE END AT BOTTOM EDGE OF TRENCH AWAY FROM MAIN AND LATERAL.

B. WRAP TRACER WIRE AROUND OUTSIDE OF MANHOLE (SEE CLTW STD. DETAIL).

C. SEE MANHOLE CONNECTION DETAIL.

D. GRAVITY SEWER MAIN LESS THAN 15' DEPTH TRACING WIRE SHALL BE ATTACHED TO PIPE.

E. GRAVITY SEWER MAIN AND LATERAL GREATER THAN 15' DEPTH. TRACER WIRE SHALL BE ATTACHED TO PIPE AND PLACED AT A DEPTH OF 4" BELOW GROUND DIRECTLY ABOVE SEWER PIPE.

F. TRACER WIRE SHOWN AWAY FROM PIPE FOR CLARITY. TRACER WIRE SHALL BE INSTALLED IMMEDIATELY ADJACENT TO THE SEWER PIPE. TRACER WIRE SHALL BE FASTENED TO THE PIPE WITH ZIP TIES OR DUCT TAPE AT 10' INTERVALS.

G. TRACER WIRE SHALL BE SOLID COPPER #12 GAUGE WITH 30 MILS GREEN HDPE INSULATION.

H. TRACER WIRE SHALL BE CONTINUOUS FROM MANHOLE TO MANHOLE WITHOUT IN-LINE SPLICES EXCEPT WHERE REQUIRED FOR SEWER SERVICE LATERALS.

I. SPLICED CONNECTIONS SHALL BE ALLOWED BETWEEN THE MAIN LINE TRACER WIRE AND THE SERVICE LATERAL TRACER WIRE.

J. TRACER WIRE SHALL BE PROTECTED FROM DAMAGE DURING THE EXECUTION OF THE WORK. NO BREAKS OR CUTS IN THE TRACER WIRE OR INSULATION SHALL BE PERMITTED.

K. PRIOR TO ACCEPTANCE (POST PUNCH LIST) EACH WIRE SEGMENT SHALL PASS A CONDUCTIVITY TEST, WITNESSED BY THE ENGINEER OR ENGINEER'S REPRESENTATIVE.

L. FOR INSTALLING A NEW SERVICE LINE ON AN EXISTING MAIN WITH TRACER WIRE, INCLUDE 2' OF SLACK IN NEW TRACER WIRE AT THE SPLICE. THE CLEANOUT SHALL SERVE AS THE TEST PORT.

CHARLOTTE WATER
CHARLOTTE WATER STANDARD DETAILS
GRAVITY SEWER

TRACER WIRE

NO SCALE | VERSION 1.0 | DATE 04/2024 | DETAIL 11.5.1

8/7/2025
5:15:26 PM
Models and Sheets\Utilities\Engineering\UC\Proj\Sheet\W-5710X_ut_UC_UC03G_details.dgn
tokirby