Docusign Envelope ID: 81F9EE35-EDEE-469B-9DFF-68C947E76F48

Project: U-5906

Project No.	Sheet No.
U-5906	Sig. 1.0

STATE OF NORTH CAROLINA
DIVISION OF HIGHWAYS

MECKLENBURG COUNTY

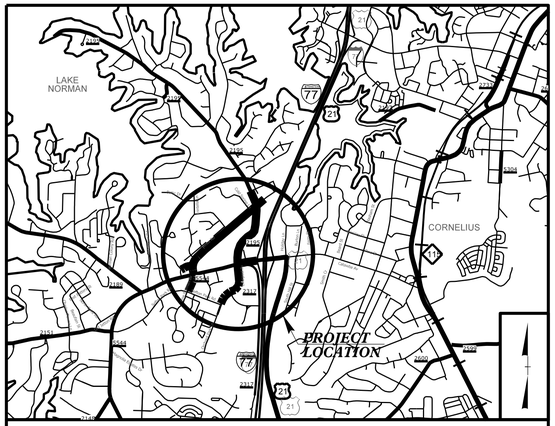

VICINITY MAP N.T.S.

LOCATION: TORRENCE CHAPEL ROAD (SR 2195) / WEST CATAWBA AVENUE (SR 5544) INTERSECTION AND SURROUNDING AREA IMPROVEMENTS

TYPE OF WORK: TRAFFIC SIGNALS

NAD 83

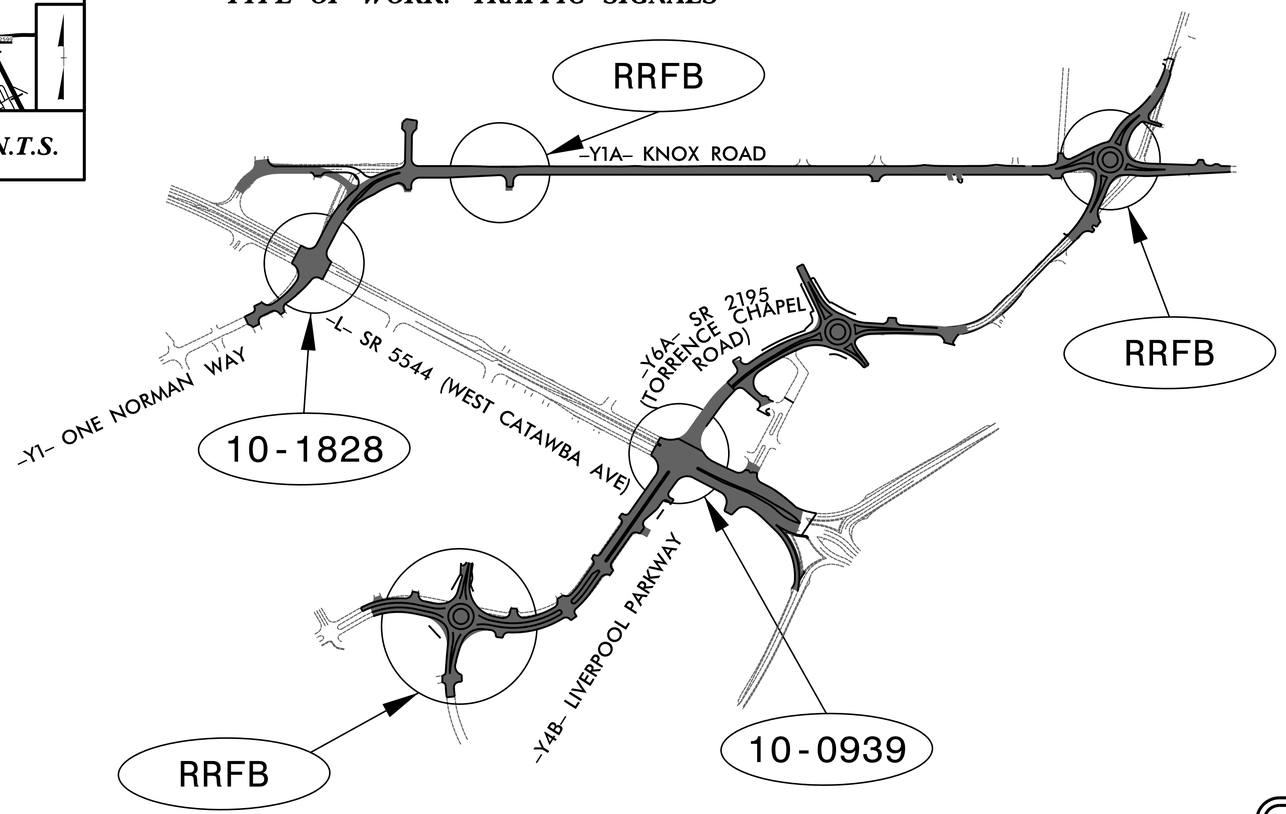

Refer to "Roadway Standard Drawings NCDOT" dated January 2024 and "Standard Specifications for Roads and Structures" dated January 2024.

Index of Plans

Sheet #	Reference #	Location/Description
Sig. 1.0	N/A	Title Sheet
Sig. 2.0 – 2.2	10-1828T1	SR 5544 (Catawba Avenue) at One Norman Way – Temporary Signal
Sig. 3.0 – 3.4	10-1828	SR 5544 (Catawba Avenue) at One Norman Way
Sig. 4.0 – 4.4	10-0939	SR 5544 (Catawba Avenue) at SR 2195 (Torrence Chapel Road) /Liverpool Parkway
Sig. M1A – M9	N/A	Standard Metal Pole Sheets
RRFB	N/A	Standard Drawing for Rectangular Rapid Flashing Beacon
SCP 1-2	N/A	West Catawba Avenue Signal System Wireless Communications Plans

INTELLIGENT TRANSPORTATION AND SIGNALS UNIT

Contacts:

R. Nicholas Zinser, PE – Western Region Signals Engineer
D. Todd Joyce, PE – Signal Equipment Design Engineer
Gregory A. Green – Signal Communications Project Engineer

PREPARED IN THE OFFICE OF:
RS&H
1520 SOUTH BOULEVARD, SUITE 200
CHARLOTTE, NC 28203
NC FIRM LICENSE No: F-0493
FOR THE NORTH CAROLINA DEPARTMENT OF TRANSPORTATION

Transportation Mobility and Safety Division
STATE OF NORTH CAROLINA DEPARTMENT OF TRANSPORTATION
TSMO UNIT
750 N. Greenfield Parkway, Garner, NC 27529

9/9/2025
8:43:10 AM
10:06:23 AM
U-5906_20249015_U-5906 Torrence Chapel\Design\Traffic\Signals\Plan Sheets\U-5906_sig_tsh_202204XX.dgn

Docusign Envelope ID: 81F9EE35-EDEE-469B-9DFF-68C947E76F48

PROJECT REFERENCE NO.	SHEET NO.
U-5906	Sig. 2.0

PHASING DIAGRAM

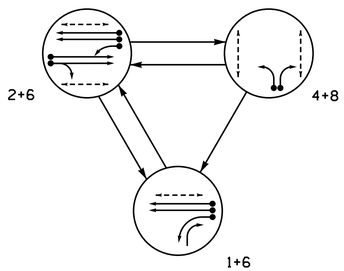

PHASING DIAGRAM DETECTION LEGEND

- DETECTED MOVEMENT
- UNDETECTED MOVEMENT (OVERLAP)
- UNSIGNALIZED MOVEMENT
- PEDESTRIAN MOVEMENT

TABLE OF OPERATION

SIGNAL FACE	PHASE 1+6	PHASE 2+6	PHASE 4+8	PHASE FLASH
11	—	F Y	R	R
21, 22	R	G	R	R
61, 62	G	G	R	R
81, 82	R	R	F Y	R
83	—	R	F Y	R
P21, P22	DW	W	DW	DRK
P41, P42	DW	DW	W	DRK
P61, P62	W	W	DW	DRK
P81, P82	DW	DW	W	DRK

SIGNAL FACE I.D.

All Heads L.E.D.

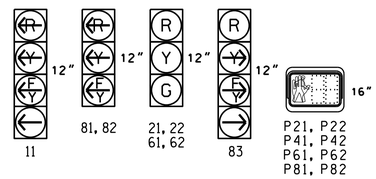

MAXTIME DETECTOR INSTALLATION CHART

DETECTOR					PROGRAMMING							
LOOP	SIZE (FT)	DISTANCE FROM STOPBAR (FT)	TURNS	NEW LOOP	CALL PHASE	DELAY TIME	EXTEND TIME	EXTEND	ADDED INITIAL	CALL	DELAY DURING GREEN	NEW CARD
1A	6X40	0	*	*	1	15.0	-	X	-	X	-	*
					6	-	-	X	-	X	-	*
8A	6X40	0	*	*	8	-	-	X	-	X	-	*
8B	6X40	0	*	*	8	15.0	-	X	-	X	-	*

*Multizone Microwave Detection

3 Phase
Fully Actuated
West Catawba Avenue CLS
D10-18 Cornelius

NOTES

1. Refer to "Roadway Standard Drawings NCDOT" dated January 2024 and "Standard Specifications for Roads and Structures" dated January 2024.
2. Do not program signal for late night flashing operation unless otherwise directed by the Engineer.
3. Phase 1 may be lagged.
4. Disconnect and abandon existing loops 1A, 2A/S09, 2B/S10, 4A, 4B, 5A, 6A/S11, 6B/S12, 8A, and 8B.
5. Locate new cabinet so as not to obstruct sight distance of vehicles turning right on red.
6. Existing conduit locations shown are approximated.
7. Set all detector units to presence mode.
8. Omit "WALK" and flashing "DON'T WALK" with no pedestrian calls.
9. Program pedestrian heads to countdown the flashing "Don't Walk" time only.
10. Maximum times shown in timing chart are for free-run operation only. Coordinated signal system timing values supersede these values.
11. Pavement markings are existing.
12. Disconnect and bag signal heads 41, 42, and 51.
13. Cover pedestrian head P61.

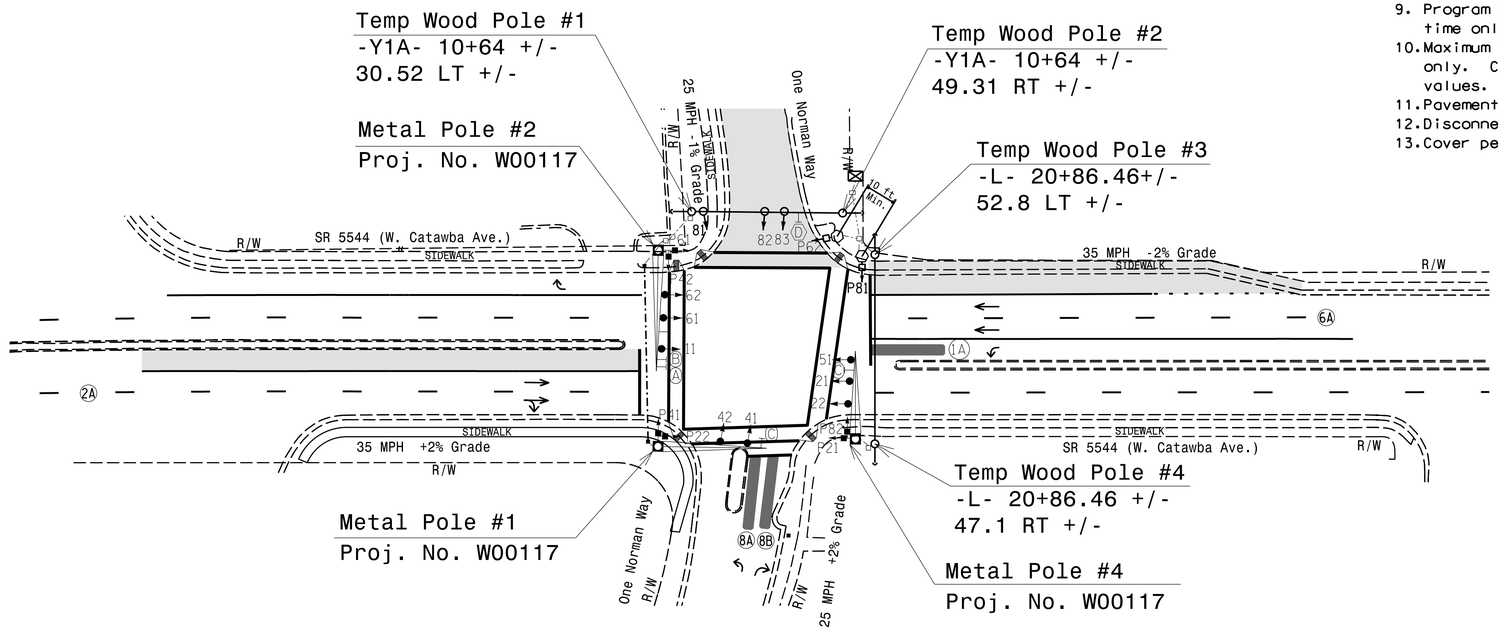

LEGEND

PROPOSED		EXISTING
	Traffic Signal Head	
	Modified Signal Head	N/A
	Sign	
	Pedestrian Signal Head With Push Button & Sign	
	Signal Pole with Guy	
	Signal Pole with Sidewalk Guy	
	Metal Pole with Mastarm	
	Inductive Loop Detector	
	Non-Intrusive Detection Zone	
	Controller & Cabinet	
	Junction Box	
	2-in Underground Conduit	
N/A	Right of Way	
	Directional Arrow	
DD	Directional Drill	N/A
N/A	Curb Ramp	
	Type II Signal Pedestal	
	Construction Zone	

SIGNS

PROPOSED		EXISTING
A	"TRUCKS AND BUSES"	A
B	No U-Turn Sign (R3-4)	B
C	Left Arrow "ONLY" Sign (R3-5L)	C
D	"RIGHT TURN YIELD TO U-TURN" Sign	D

MAXTIME TIMING CHART

FEATURE	PHASE 1	PHASE 2	PHASE 4	PHASE 6	PHASE 8
Walk *	-	14	14	14	12
Ped Clear	-	15	21	16	22
Min Green *	7	10	-	10	7
Passage *	2.0	3.0	-	3.0	2.0
Max 1 *	20	60	-	60	25
Yellow Change	3.0	4.0	-	4.0	3.2
Red Clear	3.1	2.1	-	2.1	2.7
Added Initial *	–	–	–	–	–
Maximum Initial *	–	–	–	–	–
Time Before Reduction *	–	–	–	–	–
Time To Reduce *	–	–	–	–	–
Minimum Gap	–	–	–	–	–
Advance Walk	–	7	7	7	5
Non Lock Detector	X	-	X	-	X
Vehicle Recall	–	MIN RECALL	–	MIN RECALL	–
Dual Entry	–	–	–	–	–

* These values may be field adjusted. Do not adjust Min Green and Passage times for phases 2 and 6 lower than what is shown. Min Green for all other phases should not be lower than 4 seconds.

MICROWAVE DETECTION

	2A		6A	
FUNCTION	Sensor 1		Sensor 2	
Channel	1		1	
Phase	2		6	
Direction of Travel	EB		WB	
Type	Priority		Priority	
Level	2	QUEUE	2	QUEUE
Discovery Zone (ft)	<750	-	<750	-
Range (ft)	600-100	150-100	600-100	150-100
Enable Speed	Y	Y	Y	Y
Speed Range (mph)	35-100	1-35	35-100	1-35
Enable Estimated Time of Arrival	Y	N	Y	N
Estimated Time of Arrival (sec)	2.5-6.5	-	2.5-6.5	-

RS&H
NC FIRM LICENSE No: F-0493
1520 SOUTH BOULEVARD, SUITE 200
CHARLOTTE, NC 28203
(704) 752-0610

Temporary Signal

DOCUMENT NOT CONSIDERED FINAL UNLESS ALL SIGNATURES COMPLETED

Prepared for the Offices of:
Transportation Mobility and Safety Division
STATE OF NORTH CAROLINA DEPARTMENT OF TRANSPORTATION
Signal Design Section
750 N.Greenfield Pkwy,Garner,NC 27529

SR 5544 (W. Catawba Avenue)
at
One Norman Way

Division 10 Mecklenburg County Cornelius

PLAN DATE: July 2025
PREPARED BY: A.M. Kollar
REVIEWED BY: S.G. Haynie
REVIEWED BY: ----------

SCALE 1"=40' (0 – 40)

REVISIONS	INIT.	DATE

SEAL
NORTH CAROLINA PROFESSIONAL SEAL 029531 ENGINEER STEVEN G. HAYNIE
DocuSigned by: Steve Haynie
SIGNATURE 7/30/2025 DATE

SIG. INVENTORY NO. 10-1828T1

7/16/2025
V:\1828\0049015_U-5906 Torrence Chapel\Design\Traffic\Signals\Plan Sheets\101828_T1_sig_dsn_202506XX.dgn
4:26:57 PM

Docusign Envelope ID: 81F9EE35-EDEE-469B-9DFF-68C947E76F48

PROJECT REFERENCE NO.	SHEET NO.
U-5906	Sig. 2.1

18 CHANNEL IP CONFLICT MONITOR PROGRAMMING DETAIL

(remove jumpers and set switches as shown)

REMOVE DIODE JUMPERS 1-5, 1-6, 1-9, 1-15, 2-6, 2-9, 2-13, 2-15, 5-6, 5-9, 5-11, 5-15, 6-9, 6-13, 6-15, 9-11, 9-13, 9-15, 11-12, 11-14, 11-15, 11-16, 12-14, 12-16, 13-15, and 14-16.

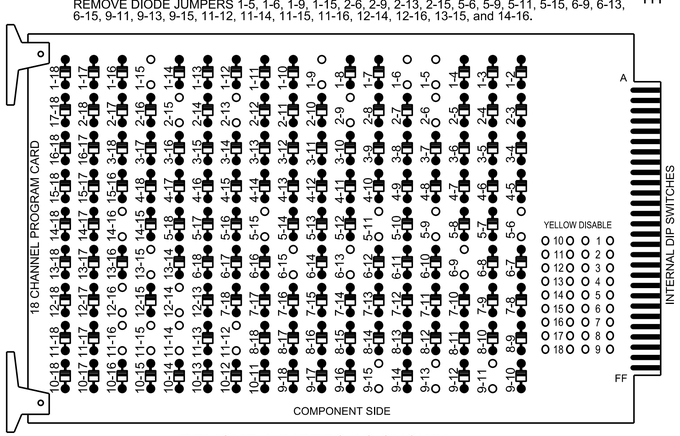

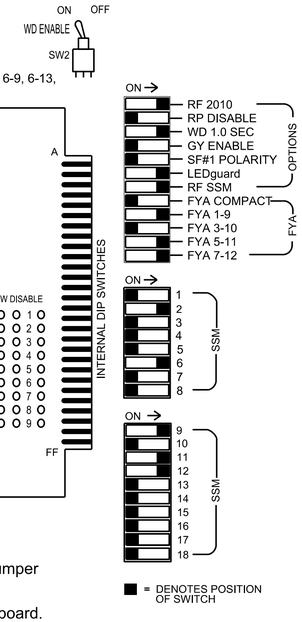

REMOVE JUMPERS AS SHOWN

NOTES:

1. Card is provided with all diode jumpers in place. Removal of any jumper allows its channels to run concurrently.
2. Ensure jumpers SEL2-SEL5 and SEL9 are present on the monitor board.
3. Ensure that the Red Enable is active at all times during normal operation.
4. Integrate monitor with Ethernet network in cabinet.

NOTES

1. To prevent "flash-conflict" problems, insert red flash program blocks for all vehicle load switches in the output file. The installer shall verify that signal heads flash in accordance with the signal plan.
2. Program controller to start up in phase 2 Green Walk and 6 Green Walk.
3. If this signal will be managed by an ATMS software, enable controller and detector logging for all detectors used at this location.
4. The cabinet and controller are part of the West Catawba Avenue CLS, D10-18 Cornelius.

EQUIPMENT INFORMATION

Controller.....2070LX
Cabinet.....332 w/ Aux
Software.....Q-Free MAXTIME
Cabinet Mount.....Base
Output File Positions.....18 With Aux. Output File
Load Switches Used.....S1, S2, S3, S6, S7, S8, S9, S12, AUX S1, AUX S4, AUX S5
Phases Used.....1, 2, 2PED, 4PED, 6, 6PED, 8PED
Overlap "1".....*
Overlap "2".....NOT USED
Overlap "3".....*
Overlap "4".....*
Overlap "5".....NOT USED
Overlap "6".....NOT USED
Overlap "7".....*

*See overlap programming detail on sheet 2

SIGNAL HEAD HOOK-UP CHART

LOAD SWITCH NO.	S1	S2	S3	S4	S5	S6	S7	S8	S9	S10	S11	S12	AUX S1	AUX S2	AUX S3	AUX S4	AUX S5	AUX S6
CMU CHANNEL NO.	1	2	13	3	4	14	5	6	15	7	8	16	9	10	17	11	12	18
PHASE	1	2	2 PED	3	4	4 PED	OL7	6	6 PED	7	8	8 PED	OL1	OL2	SPARE	OL3	OL4	SPARE
SIGNAL HEAD NO.	★ 11	21,22	P21, P22	NU	NU	P41, P42	★ 83	61,62	P61, P62	NU	NU	P81, P82	★ 11	NU	NU	★ 83	★ 81, 82	NU
RED		128						134								A114		
YELLOW	*	129					*	135										
GREEN		130						136										
RED ARROW													A121				A101	
YELLOW ARROW													A122			A115	A102	
FLASHING YELLOW ARROW													A123			A116	A103	
GREEN ARROW	127						133											
✋			113			104			119			110						
🚶			115			106			121			112						

NU = Not Used
*Denotes install load resistor. See load resistor installation detail this sheet.
★See pictorial of head wiring in detail this sheet.

FYA SIGNAL WIRING DETAIL

(wire signal heads as shown)

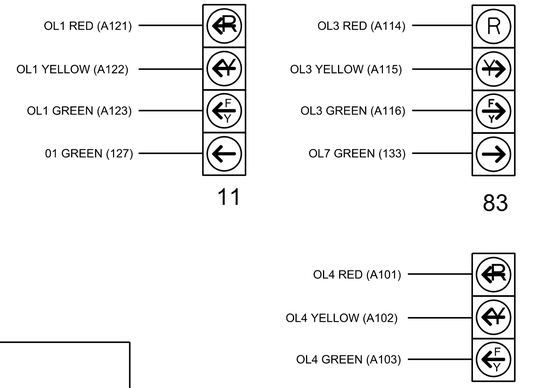

INPUT FILE POSITION LAYOUT

(front view)

		1	2	3	4	5	6	7	8	9	10	11	12	13	14
FILE "I"	U	Ø 1 1A	SLOT EMPTY	SLOT EMPTY	SLOT EMPTY	SLOT EMPTY	SLOT EMPTY	SLOT EMPTY	SLOT EMPTY	SLOT EMPTY	SLOT EMPTY	SLOT EMPTY	Ø 2 PED DC ISOLATOR	Ø 6 PED DC ISOLATOR	FS DC ISOLATOR
	L	NOT USED											Ø 4 PED DC ISOLATOR	Ø 8 PED DC ISOLATOR	ST DC ISOLATOR
FILE "J"	U	SLOT EMPTY	SLOT EMPTY	SLOT EMPTY	SLOT EMPTY	SLOT EMPTY	SLOT EMPTY	SLOT EMPTY	SLOT EMPTY	SLOT EMPTY	SLOT EMPTY	SLOT EMPTY	SLOT EMPTY	SLOT EMPTY	SLOT EMPTY
	L														

EX. : 1A, 2A, ETC. = LOOP NO.'S
Note: Remove jumper from I1-W to J4-W if present.

FS = FLASH SENSE
ST = STOP TIME

INPUT FILE CONNECTION & PROGRAMMING CHART

LOOP NO.	LOOP TERMINAL	INPUT FILE POS.	PIN NO.	INPUT POINT	DETECTOR NO.	CALL PHASE	DELAY TIME	EXTEND TIME	EXTEND	ADDED INITIAL	CALL	DELAY DURING GREEN
1A	TB2-1,2	I1U	56	18	1	1	15	---	X	_	X	_
				-	29	6	--	---	X	_	X	_
PED PUSH BUTTONS												
P21;P22	TB8-4,6	I12U	67	33	2	PED 2						
P41;P42	TB8-5,6	I12L	69	35	4	PED 4						
P61;P62	TB8-7,9	I13U	68	34	6	PED 6						
P81;P82	TB8-8,9	I13L	70	36	8	PED 8						

NOTE:
INSTALL DC ISOLATORS IN INPUT FILE SLOTS I12 AND I13.

INPUT FILE POSITION LEGEND: J2L
FILE J
SLOT 2
LOWER

COUNTDOWN PEDESTRIAN SIGNAL OPERATION

Countdown Ped Signals are required to display timing only during Ped Clearance Interval. Consult Ped Signal Module user's manual for instructions on selecting this feature.

THIS ELECTRICAL DETAIL IS FOR
THE SIGNAL DESIGN: 10-1828T1
DESIGNED: July 2025
SEALED: 7/30/2025
REVISED: N/A

LOAD RESISTOR INSTALLATION DETAIL

(install resistors as shown)

ACCEPTABLE VALUES	
Value (ohms)	Wattage
1.5K - 1.9K	25W (min)
2.0K - 3.0K	10W (min)

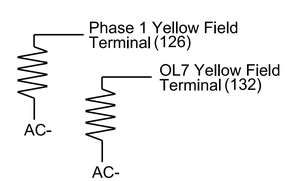

SPECIAL DETECTOR NOTE

Install a multizone microwave detection system for vehicle detection. Perform installation according to manufacturer's directions and NCDOT engineer-approved mounting locations to accomplish the detection schemes shown on the Signal Design Plans.

For Detection Zone 1A, the equipment placement is typical for a NCDOT installation.

RS&H
NC FIRM LICENSE No: F-0493
1520 SOUTH BOULEVARD, SUITE 200
CHARLOTTE, NC 28203
(704) 752-0610

Signal Upgrade - Temporary Signal
Electrical Detail Sheet 1 of 2

DOCUMENT NOT CONSIDERED FINAL UNLESS ALL SIGNATURES COMPLETED

ELECTRICAL AND PROGRAMMING DETAILS FOR:
Prepared for the Offices of:
Traffic Engineering & Safety Systems Branch
Traffic Management Unit
Transportation Mobility and Safety Division
750 N.Greenfield Pkwy,Garner,NC 27529

SR 5544 (West Catawba Avenue) at One Norman Way/Knox Road
Division 10 Mecklenburg County Cornelius

PLAN DATE: July 2025	REVIEWED BY: O. Drobny
PREPARED BY: S.G. Haynie	REVIEWED BY:

REVISIONS	INIT.	DATE

SEAL
NORTH CAROLINA PROFESSIONAL SEAL 029531 ENGINEER SEVEN G. HAYNIE
DocuSigned by: Steve Haynie 7/30/2025
SIGNATURE DATE
SIG. INVENTORY NO. 10-1828T1

7/30/2025
X:\Projects\U-5906 Torrence Chapel\Design\Traffic\Signals\Plan Sheets\01828_T1_smele.20250527.dgn
8:35:45 AM

Docusign Envelope ID: 81F9EE35-EDEE-469B-9DFF-68C947E76F48

PROJECT REFERENCE NO.	SHEET NO.
U-5906	Sig. 2.2

MAXTIME OVERLAP PROGRAMMING DETAIL FOR DEFAULT PHASING

Front Panel
Main Menu >Controller >Overlap >Overlap Parameters/Overlap Timings

Web Interface
Home >Controller >Overlap Configuration >Overlaps

Overlap Plan 1

Overlap	1	3	4	7
Type	FYA 4 - Section	FYA 4 - Section	FYA 4 - Section	Normal
Included Phases	2	8	8	1
Modifier Phases	1	1	-	-
Modifier Overlaps	-	-	-	-
Trail Green	0	0	0	0
Trail Yellow	0.0	0.0	0.0	0.0
Trail Red	0.0	0.0	0.0	0.0

MAXTIME STARTUP AND SOFTWARE FLASH PROGRAMMING DETAIL

Front Panel
Main Menu >Controller >Unit

Web Interface
Home >Controller >Unit

Modify parameters as shown below and save changes.

Start Up Parameters

StartUp Clearance Hold
6

Unit Flash Parameters

All Red Flash Exit Time
6

FLASHER CIRCUIT MODIFICATION DETAIL

IN ORDER TO INSURE THAT SIGNALS FLASH CONCURRENTLY ON THE SAME APPROACH, MAKE THE FOLLOWING FLASHER CIRCUIT CHANGES:

1. ON REAR OF PDA - REMOVE WIRE FROM TERM. T2-4 AND TERMINATE ON T2-2.
2. ON REAR OF PDA - REMOVE WIRE FROM TERM. T2-5 AND TERMINATE ON T2-3.
3. REMOVE FLASHER UNIT 2.

THE CHANGES LISTED ABOVE TIES ALL PHASES AND OVERLAPS TO FLASHER UNIT 1.

OUTPUT CHANNEL CONFIGURATION

Front Panel
Main Menu >Controller >More>Channels>Channels Config

Web Interface
Home >Controller >Advanced IO>Channels>Channel Configuration

Channel Configuration

Channel	Control Type	Control Source	Flash Yellow	Flash Red	Flash Alt	MMU Channel
1	Phase Vehicle	1		X	X	1
2	Phase Vehicle	2		X		2
3	Phase Vehicle	3		X	X	3
4	Phase Vehicle	4		X		4
5	Overlap	7		X		5
6	Phase Vehicle	6		X	X	6
7	Phase Vehicle	7		X		7
8	Phase Vehicle	8		X	X	8
9	Overlap	1		X	X	9
10	Overlap	2		X	X	10
11	Overlap	3		X		11
12	Overlap	4		X		12
13	Phase Ped	2				13
14	Phase Ped	4				14
15	Phase Ped	6				15
16	Phase Ped	8				16
17	Overlap	5		X	X	17
18	Overlap	6		X		18

THIS ELECTRICAL DETAIL IS FOR
THE SIGNAL DESIGN: 10-1828T1
DESIGNED: July 2025
SEALED: 7/30/2025
REVISED: N/A

Signal Upgrade - Temporary Signal
Electrical Detail Sheet 2 of 2

DOCUMENT NOT CONSIDERED FINAL UNLESS ALL SIGNATURES COMPLETED

RS&H
NC FIRM LICENSE No: F-0493
1520 SOUTH BOULEVARD, SUITE 200
CHARLOTTE, NC 28203
(704) 752-0610

ELECTRICAL AND PROGRAMMING DETAILS FOR:

Prepared for the Offices of:
NC Transportation Mobility and Safety Division, ITS & Signals Management Section, STATE OF NORTH CAROLINA DEPARTMENT OF TRANSPORTATION
750 N.Greenfield Pkwy,Garner,NC 27529

SR 5544 (West Catawba Avenue)
at
One Norman Way/Knox Road

Division 10 Mecklenburg County Cornelius

PLAN DATE:	July 2025	REVIEWED BY:	O. Drobny
PREPARED BY:	S.G. Haynie	REVIEWED BY:	

REVISIONS	INIT.	DATE

SEAL
NORTH CAROLINA PROFESSIONAL SEAL 029531 ENGINEER STEVEN G. HAYNIE

DocuSigned by: Steve Haynie 7/30/2025
SIGNATURE DATE

SIG. INVENTORY NO. 10-1828T1

7/30/2025
X:\WP\2025\049015.U-5906 Terrence Chapel\Design\Traffic\Signals\Plan Sheets\10828.T1_sm_ele_20250527.dgn
8:35:50 AM

Docusign Envelope ID: 81F9EE35-EDEE-469B-9DFF-68C947E76F48

PROJECT REFERENCE NO.	SHEET NO.
U-5906	Sig. 3.0

8 Phase
Fully Actuated
West Catawba Avenue CLS
D10-18 Cornelius

PHASING DIAGRAM

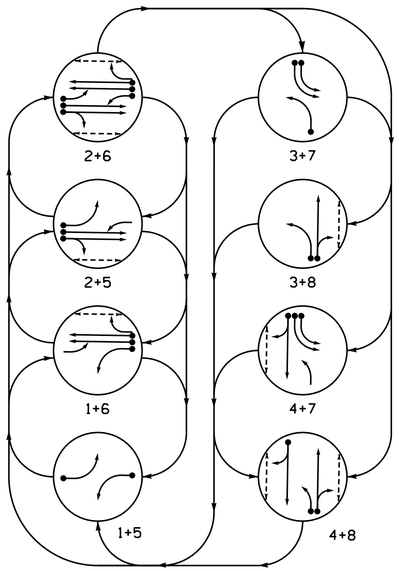

PHASING DIAGRAM DETECTION LEGEND

- DETECTED MOVEMENT
- UNDETECTED MOVEMENT (OVERLAP)
- UNSIGNALIZED MOVEMENT
- PEDESTRIAN MOVEMENT

TABLE OF OPERATION

SIGNAL FACE	PHASE 1+5	1+6	2+5	2+6	3+7	3+8	4+7	4+8	FLASH
11	—	—	F Y	F Y	R	R	R	R	R
21, 22	R	R	G	G	R	R	R	R	R
31	R	R	R	R	—	—	F Y	F Y	R
41, 42	R	R	R	R	R	R	G	G	R
51	—	F Y	—	F Y	R	R	R	R	R
61, 62	R	G	R	G	R	R	R	R	R
63	R	F Y	R	F Y	R	R	R	R	R
71, 72	R	R	R	R	—	R	—	R	R
81, 82	R	R	R	R	R	G	R	G	R
P21, P22	DW	DW	W	W	DW	DW	DW	DW	DRK
P41, P42	DW	DW	DW	DW	DW	DW	W	W	DRK
P61, P62	DW	W	DW	W	DW	DW	DW	DW	DRK
P81, P82	DW	DW	DW	DW	DW	W	DW	W	DRK

SIGNAL FACE I.D.

All Heads L.E.D.

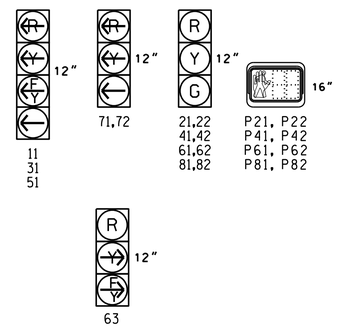

MAXTIME DETECTOR INSTALLATION CHART

DETECTOR: LOOP	SIZE (FT)	DISTANCE FROM STOPBAR (FT)	TURNS	NEW LOOP	PROGRAMMING: CALL PHASE	DELAY TIME	EXTEND TIME	EXTEND	ADDED INITIAL	CALL	DELAY DURING GREEN	NEW CARD
1A	6X40	0	*	*	1	15.0	-	X	-	X	-	*
					6	-	-	X	-	X	X	*
3A	6X40	0	*	*	3	15.0	-	X	-	X	-	*
					8	-	-	X	-	X	-	*
4A	6X40	0	*	*	4	10.0	-	X	-	X	-	*
5A	6X40	0	*	*	5	15.0	-	X	-	X	-	*
					2	-	-	X	-	X	X	*
7A	6X40	0	*	*	7	3.0	-	X	-	X	-	*
7B	6X40	0	*	*	7	-	-	X	-	X	-	*
8A	6X40	0	*	*	8	10.0	-	X	-	X	-	*

* Multizone Microwave Detection

NOTES

1. Refer to "Roadway Standard Drawings NCDOT" dated January 2024 and "Standard Specifications for Roads and Structures" dated January 2024.
2. Do not program signal for late night flashing operation unless otherwise directed by the Engineer.
3. Phase 1 and/or phase 5 may be lagged.
4. Phase 3 and/or phase 7 may be lagged.
5. Reposition existing signal heads numbered 41, 42, 61, and 62.
6. Existing conduit locations shown are approximated.
7. Set all detector units to presence mode.
8. Remove R3-5L Left Arrow "ONLY" Signs from mast arm pole #1.
9. Omit "WALK" and flashing "DON'T WALK" with no pedestrian calls.
10. Program pedestrian heads to countdown the flashing "Don't Walk" time only.
11. Maximum times shown in timing chart are for free-run operation only. Coordinated signal system timing values supersede these values.
12. The Division Traffic Engineer will determine pushbutton locations.
13. Refer to Tip No. U-5906 pavement marking plans for pavement markings.
14. Remove existing "Trucks and Buses" and No U-Turn (R3-4) signs.
15. Reconnect and unbag signal heads 41, 42, and 51.

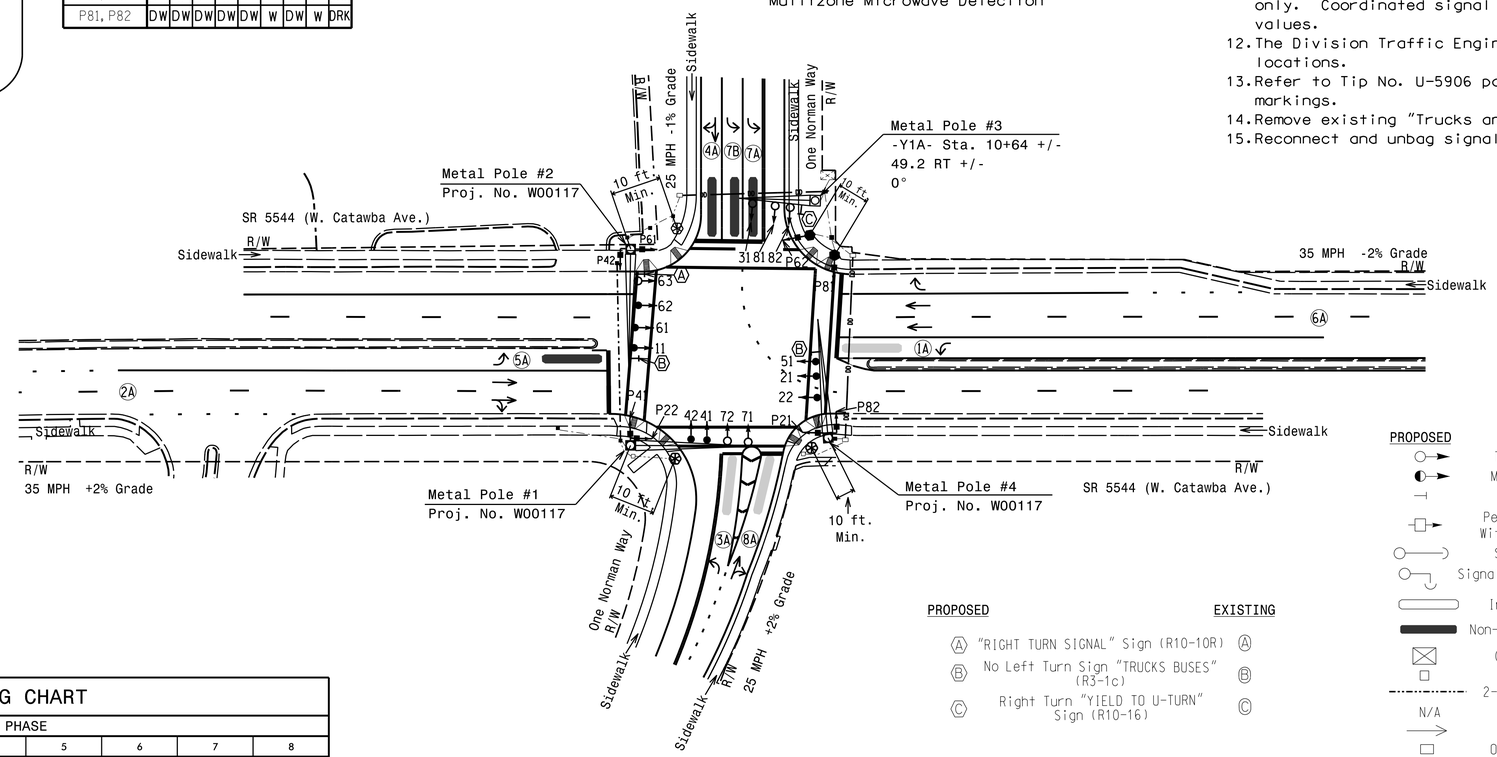

PROPOSED		EXISTING
A	"RIGHT TURN SIGNAL" Sign (R10-10R)	A
B	No Left Turn Sign "TRUCKS BUSES" (R3-1c)	B
C	Right Turn "YIELD TO U-TURN" Sign (R10-16)	C

PROPOSED		EXISTING
	Traffic Signal Head	
	Modified Signal Head	N/A
	Sign	
	Pedestrian Signal Head With Push Button & Sign	
	Signal Pole with Guy	
	Signal Pole with Sidewalk Guy	
	Inductive Loop Detector	
	Non-Intrusive Detection Zone	
	Controller & Cabinet	
	Junction Box	
	2-in Underground Conduit	
N/A	Right of Way	
	Directional Arrow	
	Oversized Junction Box	
	Type I Pushbutton Post	
	Type II Signal Pedestal	
DD	Directional Drill	N/A
N/A	Curb Ramp	
	Metal Pole with Mastarm	

MAXTIME TIMING CHART

FEATURE	PHASE 1	2	3	4	5	6	7	8
Walk *	-	14	-	11	-	14	-	11
Ped Clear	-	15	-	19	-	15	-	19
Min Green *	7	10	7	7	7	10	7	7
Passage *	2.0	3.0	2.0	2.0	2.0	3.0	2.0	2.0
Max 1 *	25	90	15	20	15	90	20	20
Yellow Change	3.0	4.0	3.0	3.2	3.0	4.0	3.0	3.2
Red Clear	2.8	2.6	2.8	2.8	3.3	2.6	3.2	2.8
Added Initial *	–	–	–	–	–	–	–	–
Maximum Initial *	–	–	–	–	–	–	–	–
Time Before Reduction *	–	–	–	–	–	–	–	–
Time To Reduce *	–	–	–	–	–	–	–	–
Minimum Gap	–	–	–	–	–	–	–	–
Advance Walk	–	7	–	4	–	7	–	4
Non Lock Detector	X	-	X	X	X	-	X	X
Vehicle Recall	–	MIN RECALL	–	–	–	MIN RECALL	–	–
Dual Entry	–	–	–	X	–	–	–	X

* These values may be field adjusted. Do not adjust Min Green and Passage times for phases 2 and 6 lower than what is shown. Min Green for all other phases should not be lower than 4 seconds.

MICROWAVE DETECTION

FUNCTION	2A Sensor 1		6A Sensor 2	
Channel	1		1	
Phase	2		6	
Direction of Travel	EB		WB	
Type	Priority		Priority	
Level	2	QUEUE	2	QUEUE
Discovery Zone (ft)	<750	-	<750	-
Range (ft)	600-100	150-100	600-100	150-100
Enable Speed	Y	Y	Y	Y
Speed Range (mph)	35-100	1-35	35-100	1-35
Enable Estimated Time of Arrival	Y	N	Y	N
Estimated Time of Arrival (sec)	2.5-6.5	-	2.5-6.5	-

RS&H
NC FIRM LICENSE No: F-0493
1520 SOUTH BOULEVARD, SUITE 200
CHARLOTTE, NC 28203
(704) 752-0610

Signal Upgrade - Final Design

DOCUMENT NOT CONSIDERED FINAL UNLESS ALL SIGNATURES COMPLETED

Prepared for the Offices of:
Transportation Mobility and Safety Division
Signal Design Section
STATE OF NORTH CAROLINA DEPARTMENT OF TRANSPORTATION
750 N.Greenfield Pkwy,Garner,NC 27529

SR 5544 (W. Catawba Avenue) at One Norman Way

Division 10 Mecklenburg County Cornelius

PLAN DATE:	July 2025	REVIEWED BY:	S.G. Haynie
PREPARED BY:	A.M. Kollar	REVIEWED BY:	----------

REVISIONS	INIT.	DATE

SCALE 0 40 1"=40'

SEAL
NORTH CAROLINA PROFESSIONAL ENGINEER SEAL 029531 STEVEN G. HAYNIE

DocuSign Envelope ID: 81F9EE35-EDEE-469B-9DFF-68C947E76F48
Steve Haynie 7/30/2025
SIGNATURE DATE

SIG. INVENTORY NO. 10-1828

$$$

Docusign Envelope ID: 81F9EE35-EDEE-469B-9DFF-68C947E76F48

PROJECT REFERENCE NO.	SHEET NO.
U-5906	Sig. 3.1

18 CHANNEL IP CONFLICT MONITOR PROGRAMMING DETAIL

(remove jumpers and set switches as shown)

REMOVE DIODE JUMPERS 1-5, 1-6, 1-9, 1-11, 1-15, 1-17, 2-5, 2-6, 2-9, 2-11, 2-13, 2-15, 2-17, 3-7, 3-8, 3-10, 3-16, 3-17, 4-7, 4-8, 4-10, 4-14, 4-16, 4-17, 5-9, 5-11, 5-13, 6-9, 6-11, 6-13, 6-15, 6-17, 7-10, 7-14, 7-17, 8-10, 8-14, 8-16, 9-11, 9-13, 9-15, 9-17, 10-14, 10-16, 10-17, 11-13, 11-15, 11-17, 13-15, 13-17, 14-16, 14-17, and 15-17.

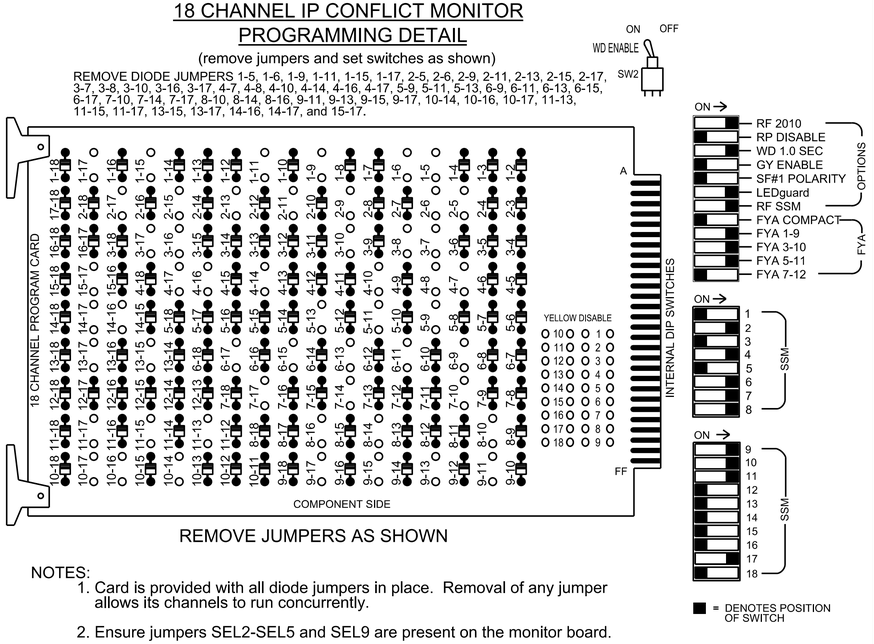

REMOVE JUMPERS AS SHOWN

NOTES:

1. Card is provided with all diode jumpers in place. Removal of any jumper allows its channels to run concurrently.
2. Ensure jumpers SEL2-SEL5 and SEL9 are present on the monitor board.
3. Ensure that the Red Enable is active at all times during normal operation.
4. Integrate monitor with Ethernet network in cabinet.

NOTES

1. To prevent "flash-conflict" problems, insert red flash program blocks for all vehicle load switches in the output file. The installer shall verify that signal heads flash in accordance with the signal plan.
2. Return controller to Factory Defaults before programming per this electrical detail.
2. Program phases 4 and 8 for Dual Entry.
3. Program controller to start up in phase 2 Green Walk and 6 Green Walk.
4. If this signal will be managed by an ATMS software, enable controller and detector logging for all detectors used at this location.
5. The cabinet and controller are part of the West Catawba Avenue CLS, D10-18 Cornelius.

EQUIPMENT INFORMATION

Controller.....2070LX
Cabinet.....332 w/ Aux
Software.....Q-Free MAXTIME
Cabinet Mount.....Base
Output File Positions.....18 With Aux. Output File
Load Switches Used.....S1, S2, S3, S4, S5, S6, S7, S8, S9, S10, S11, S12, AUX S1, AUX S2, AUX S3, AUX S4
Phases Used.....1, 2, 2PED, 3, 4, 4PED, 5, 6, 6PED, 7, 8, 8PED
Overlap "1".....*
Overlap "2".....*
Overlap "3".....*
Overlap "4".....NOT USED
Overlap "5".....*

*See overlap programming detail on sheet 2

SIGNAL HEAD HOOK-UP CHART

LOAD SWITCH NO.	S1	S2	S3	S4	S5	S6	S7	S8	S9	S10	S11	S12	AUX S1	AUX S2	AUX S3	AUX S4	AUX S5	AUX S6
CMU CHANNEL NO.	1	2	13	3	4	14	5	6	15	7	8	16	9	10	17	11	12	18
PHASE	1	2	2 PED	3	4	4 PED	5	6	6 PED	7	8	8 PED	OL1	OL2	OL5	OL3	OL4	SPARE
SIGNAL HEAD NO.	* 11	21,22	P21, P22	* 31	41,42	P41, P42	* 51	61,62	P61, P62	71,72	81,82	P81, P82	* 11	* 31	* 63	* 51	NU	NU
RED		128			101			134			107				A111			
YELLOW	*	129		*	102		*	135			108							
GREEN		130			103			136			109							
RED ARROW										122			A121	A124		A114		
YELLOW ARROW										123			A122	A125	A112	A115		
FLASHING YELLOW ARROW													A123	A126	A113	A116		
GREEN ARROW	127			118			133			124								
✋			113			104			119			110						
🚶			115			106			121			112						

NU = Not Used

*Denotes install load resistor. See load resistor installation detail this sheet.

*See pictorial of head wiring in detail this sheet.

FYA SIGNAL WIRING DETAIL

(wire signal heads as shown)

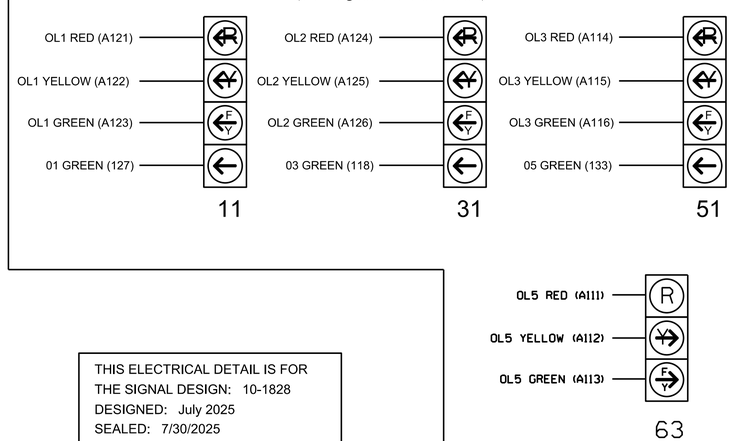

INPUT FILE POSITION LAYOUT

(front view)

		1	2	3	4	5	6	7	8	9	10	11	12	13	14
FILE "I"	U	Ø 1 1A	SLOT EMPTY	SLOT EMPTY	SLOT EMPTY	Ø 3 3A	SLOT EMPTY	SLOT EMPTY	SLOT EMPTY	SLOT EMPTY	SLOT EMPTY	SLOT EMPTY	Ø 2 PED DC ISOLATOR	Ø 6 PED DC ISOLATOR	FS DC ISOLATOR
	L	NOT USED				NOT USED							Ø 4 PED DC ISOLATOR	Ø 8 PED DC ISOLATOR	ST DC ISOLATOR
FILE "J"	U	Ø 5 5A	SLOT EMPTY	SLOT EMPTY	SLOT EMPTY	SLOT EMPTY	SLOT EMPTY	SLOT EMPTY	SLOT EMPTY	SLOT EMPTY	SLOT EMPTY	SLOT EMPTY	SLOT EMPTY	SLOT EMPTY	SLOT EMPTY
	L	NOT USED													

EX.: 1A, 2A, ETC. = LOOP NO.'S

FS = FLASH SENSE
ST = STOP TIME

INPUT FILE CONNECTION & PROGRAMMING CHART

LOOP NO.	LOOP TERMINAL	INPUT FILE POS.	PIN NO.	INPUT POINT	DETECTOR NO.	CALL PHASE	DELAY TIME	EXTEND TIME	EXTEND	ADDED INITIAL	CALL	DELAY DURING GREEN
1A	TB2-1,2	I1U	56	18	1	1	15.0	...	X	_	X	_
				-	29	6	-	...	X	_	X	_
3A	TB4-5,6	I5U	58	20	7	3	15.0	...	X	_	X	_
				-	30	8	-	...	X	_	X	_
5A	TB3-1,2	J1U	55	17	15	5	15.0	...	X	_	X	_
				-	31	2	-	...	X	_	X	_
PED PUSH BUTTONS												
P21;P22	TB8-4,6	I12U	67	33	2	PED 2						
P41;P42	TB8-5,6	I12L	69	35	4	PED 4						
P61;P62	TB8-7,9	I13U	68	34	6	PED 6						
P81;P82	TB8-8,9	I13L	70	36	8	PED 8						

NOTE:
INSTALL DC ISOLATORS IN INPUT FILE SLOTS I12 AND I13.

INPUT FILE POSITION LEGEND: J2L
FILE J
SLOT 2
LOWER

THIS ELECTRICAL DETAIL IS FOR
THE SIGNAL DESIGN: 10-1828
DESIGNED: July 2025
SEALED: 7/30/2025
REVISED: N/A

LOAD RESISTOR INSTALLATION DETAIL

(install resistors as shown)

ACCEPTABLE VALUES	
Value (ohms)	Wattage
1.5K - 1.9K	25W (min)
2.0K - 3.0K	10W (min)

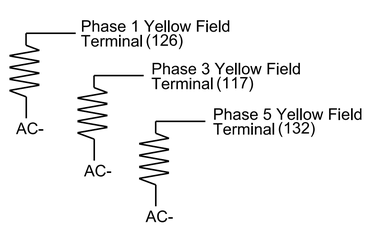

COUNTDOWN PEDESTRIAN SIGNAL OPERATION

Countdown Ped Signals are required to display timing only during Ped Clearance Interval. Consult Ped Signal Module user's manual for instructions on selecting this feature.

SPECIAL DETECTOR NOTE

Install a multizone microwave detection system for vehicle detection. Perform installation according to manufacturer's directions and NCDOT engineer-approved mounting locations to accomplish the detection schemes shown on the Signal Design Plans.

For Detection Zones 1A, 3A, and 5A, the equipment placement is typical for a NCDOT installation.

RS&H
NC FIRM LICENSE No: F-0493
1520 SOUTH BOULEVARD, SUITE 200
CHARLOTTE, NC 28203
(704) 752-6610

Signal Upgrade - Final
Electrical Detail Sheet 1 of 2

DOCUMENT NOT CONSIDERED FINAL UNLESS ALL SIGNATURES COMPLETED

ELECTRICAL AND PROGRAMMING DETAILS FOR:

Prepared for the Offices of:
Transportation Mobility and Safety Division
STATE OF NORTH CAROLINA DEPARTMENT OF TRANSPORTATION
ITS & Signals Management Section
750 N.Greenfield Pkwy,Garner,NC 27529

SR 5544 (West Catawba Avenue) at One Norman Way

Division 10 Mecklenburg County Cornelius

PLAN DATE:	July 2025	REVIEWED BY:	O. Drobny
PREPARED BY:	S.G. Haynie	REVIEWED BY:	

REVISIONS	INIT.	DATE

SEAL
NORTH CAROLINA PROFESSIONAL SEAL 029531 ENGINEER STEVEN G. HAYNIE
DocuSigned by: Steve Haynie 7/30/2025
SIGNATURE DATE
SIG. INVENTORY NO. 10-1828

7/30/2025
X:\Traffic\Projects\U-5906 Torrence Chapel\Design\Traffic\Signals\Plan Sheets\10-1828_sm_elec_20250527.dgn
8:36:40 AM

Docusign Envelope ID: 81F9EE35-EDEE-469B-9DFF-68C947E76F48

PROJECT REFERENCE NO.	SHEET NO.
U-5906	Sig. 3.2

MAXTIME OVERLAP PROGRAMMING DETAIL FOR DEFAULT PHASING

Front Panel
Main Menu >Controller >Overlap >Overlap Parameters/Overlap Timings

Web Interface
Home >Controller >Overlap Configuration >Overlaps

Overlap Plan 1

Overlap	1	2	3	5
Type	FYA 4 - Section	FYA 4 - Section	FYA 4 - Section	FYA 4 - Section
Included Phases	2	4	6	6
Modifier Phases	1	3	5	-
Modifier Overlaps	-	-	-	-
Trail Green	0	0	0	0
Trail Yellow	0.0	0.0	0.0	0.0
Trail Red	0.0	0.0	0.0	0.0

MAXTIME STARTUP AND SOFTWARE FLASH PROGRAMMING DETAIL

Front Panel
Main Menu >Controller >Unit

Web Interface
Home >Controller >Unit

Modify parameters as shown below and save changes.

Start Up Parameters

StartUp Clearance Hold
6

Unit Flash Parameters

All Red Flash Exit Time
6

THIS ELECTRICAL DETAIL IS FOR
THE SIGNAL DESIGN: 10-1828
DESIGNED: July 2025
SEALED: 7/30/2025
REVISED: N/A

OUTPUT CHANNEL CONFIGURATION

Front Panel
Main Menu >Controller >More>Channels>Channels Config

Web Interface
Home >Controller >Advanced IO>Channels>Channel Configuration

Channel Configuration

Channel	Control Type	Control Source	Flash Yellow	Flash Red	Flash Alt	MMU Channel
1	Phase Vehicle	1		X	X	1
2	Phase Vehicle	2		X		2
3	Phase Vehicle	3		X	X	3
4	Phase Vehicle	4		X		4
5	Phase Vehicle	5		X		5
6	Phase Vehicle	6		X	X	6
7	Phase Vehicle	7		X		7
8	Phase Vehicle	8		X	X	8
9	Overlap	1		X	X	9
10	Overlap	2		X	X	10
11	Overlap	3		X		11
12	Overlap	4		X		12
13	Phase Ped	2				13
14	Phase Ped	4				14
15	Phase Ped	6				15
16	Phase Ped	8				16
17	Overlap	5		X	X	17
18	Overlap	6		X		18

FLASHER CIRCUIT MODIFICATION DETAIL

IN ORDER TO INSURE THAT SIGNALS FLASH CONCURRENTLY ON THE SAME APPROACH, MAKE THE FOLLOWING FLASHER CIRCUIT CHANGES:

1. ON REAR OF PDA - REMOVE WIRE FROM TERM. T2-4 AND TERMINATE ON T2-2.
2. ON REAR OF PDA - REMOVE WIRE FROM TERM. T2-5 AND TERMINATE ON T2-3.
3. REMOVE FLASHER UNIT 2.

THE CHANGES LISTED ABOVE TIES ALL PHASES AND OVERLAPS TO FLASHER UNIT 1.

Signal Upgrade - Final
Electrical Detail Sheet 2 of 2

DOCUMENT NOT CONSIDERED FINAL UNLESS ALL SIGNATURES COMPLETED

RS&H
NC FIRM LICENSE No: F-0493
1520 SOUTH BOULEVARD, SUITE 200
CHARLOTTE, NC 28203
(704) 752-0610

ELECTRICAL AND PROGRAMMING DETAILS FOR:
Prepared for the Offices of:
Traffic Engineering & Signal Management Section, Mobility and Safety Division, Department of Transportation, State of North Carolina
750 N.Greenfield Pkwy,Garner,NC 27529

SR 5544 (West Catawba Avenue)
at
One Norman Way

Division 10 Mecklenburg County Cornelius

PLAN DATE:	July 2025	REVIEWED BY:	O. Drobny
PREPARED BY:	S.G. Haynie	REVIEWED BY:	

REVISIONS	INIT.	DATE

SEAL
NORTH CAROLINA PROFESSIONAL SEAL 029531 ENGINEER STEVEN G. HAYNIE

DocuSigned by: Steve Haynie 7/30/2025
SIGNATURE DATE

SIG. INVENTORY NO. 10-1828

7/30/2025
V:\Projects\U-5906 Torrence Chapel\Design\Traffic\Signals\Plan Sheets\10-1828_sample_20250527.dgn
8:36:45 AM

Docusign Envelope ID: 81F9EE35-EDEE-469B-9DFF-68C947E76F48

METAL POLE No. 1 & 2

PROJECT REFERENCE NO.	SHEET NO.
U-5906	Sig. 3.3

Design Loading for Existing METAL POLE NO. 1 (Formerly NO. 10 Proj. No. W00117)

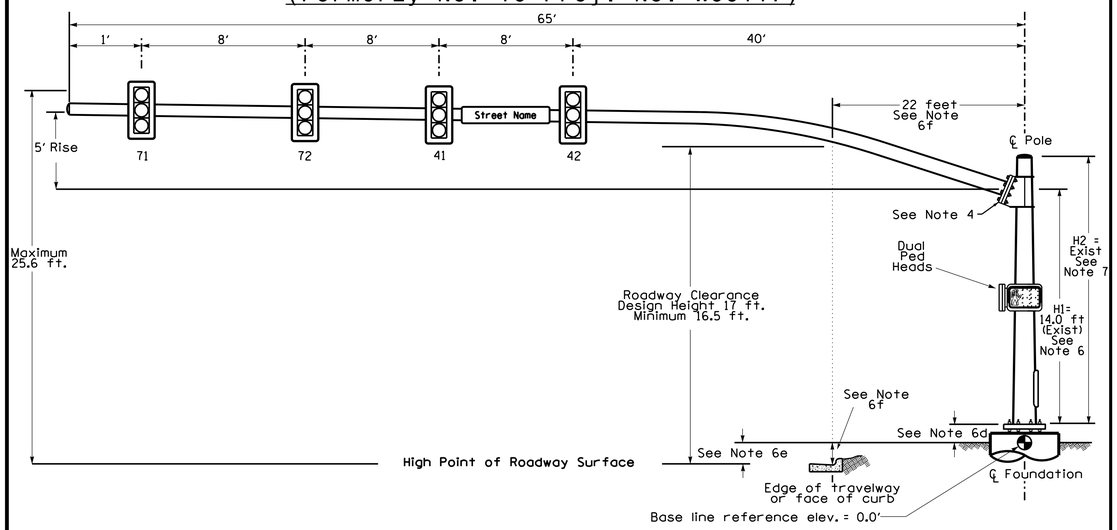

Elevation View

Design Loading for Existing METAL POLE NO. 2 (Formerly NO. 7 Proj. No. W00117)

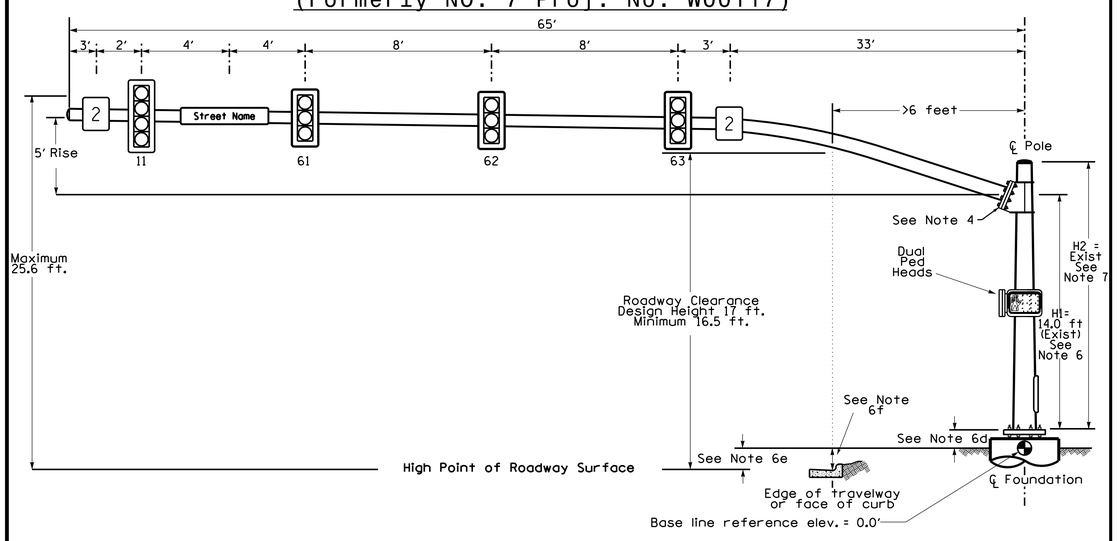

Elevation View

SPECIAL NOTE

The contractor is responsible for verifying that the mast arm attachment height (H1) will provide the "Design Height" clearance from the roadway before submitting final shop drawings for approval. Verify elevation data below which was obtained by field measurement or from available project survey data.

Elevation Data for Mast Arm Attachment (H1)

Elevation Differences for:	Pole 1	Pole 2
Baseline reference point at ℄ Foundation @ ground level	Exist.	Exist.
Elevation difference at High point of roadway surface	Exist.	Exist.
Elevation difference at Edge of travelway or face of curb	Exist.	Exist.

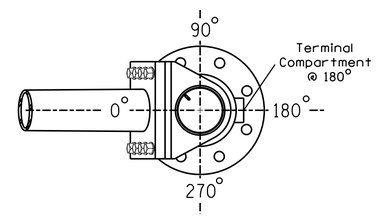

POLE RADIAL ORIENTATION

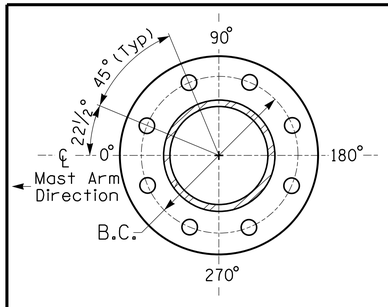

8 BOLT BASE PLATE DETAIL

See Note 5

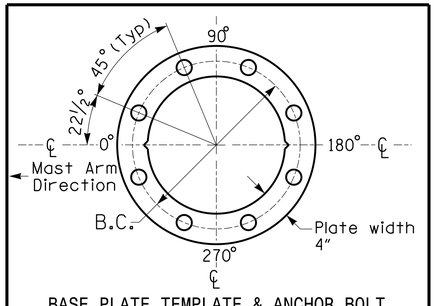

BASE PLATE TEMPLATE & ANCHOR BOLT LOCK PLATE DETAIL

For 8 Bolt Base Plate

MAST ARM LOADING SCHEDULE

LOADING SYMBOL	DESCRIPTION	AREA	SIZE	WEIGHT
	POLYCARBONATE RIGID MOUNTED SIGNAL HEAD 12"-4 SECTION-NO BACKPLATE	5.6 S.F.	14.0"W X 56.0"L	62.5 LBS
	POLYCARBONATE RIGID MOUNTED SIGNAL HEAD 12"-3 SECTION-NO BACKPLATE	4.2 S.F.	14.0"W X 43.0"L	38 LBS
2	SIGN RIGID MOUNTED	7.5 S.F.	30.0"W X 36.0"L	14 LBS
Street Name	STREET NAME SIGN RIGID MOUNTED	16.0 S.F.	24.0"W X 96.0"L	36 LBS

DESIGN REFERENCE MATERIAL

1. Design the traffic signal structure and foundation in accordance with:
   - The 1st Edition 2015 AASHTO LRFD "Standard Specifications for Structural Supports for Highway Signs, Luminaires, and Traffic Signals, including all of the latest interim revisions.
   - The 2024 NCDOT "Standard Specifications for Roads and Structures." The latest addenda to the specifications can be found in the traffic signal project special provisions.
   - The 2024 NCDOT Roadway Standard Drawings.
   - The traffic signal project plans and special provisions.
   - The NCDOT "Metal Pole Standards" located at the following NCDOT website: https://connect.ncdot.gov/resources/safety/Pages/ITS-Design-Resources.aspx

DESIGN REQUIREMENTS

2. Design the traffic signal structure using the loading conditions shown in the elevation views. These are anticipated worst case "design loads" and may not represent the actual loads that will be applied at the time of the installation. The contractor should refer to the traffic signal plans for the actual loads that will be applied at the time of the installation.
3. Design all signal supports using force ratios that do not exceed 0.9.
4. A clamp-type bolted mast arm-to-pole connection may be used instead of the welded ring stiffened box connection shown as long as the connection meets all of the design requirements.
5. Design base plate with 8 anchor bolt holes. Provide 2 inch x 60 inch anchor bolts.
6. The mast arm attachment height (H1) shown is based on the following design assumptions:
   a. Nominal vertical rise in mast arm is 5 feet as measured from the centerline of the arm base to the centerline of the free end of the arm.
   b. Signal heads are rigidly mounted and vertically centered on the mast arm.
   c. The roadway clearance height for design is as shown in the elevation views.
   d. The top of the pole base plate is 0.75 feet above the ground elevation.
   e. Refer to the Elevation Data Chart for the elevation differences between the proposed foundation ground level and the high point of the roadway.
   f. Provide horizontal distance from the proposed centerline of the foundation to the edge of travelway. Refer to the Elevation Data Chart for elevation difference between the proposed foundation ground level and the edge of travelway. This information is necessary to ensure that the roadway clearance is maintained at the edge of the travelway and to aid in the camber design of the arm.
7. The pole manufacturer will determine the total height (H2) of each pole using the greater of the following:
   - Mast arm attachment height (H1) plus 2 feet, or
   - H1 plus 1/2 of the total height of the mast arm attachment assembly plus 1 foot.
8. If pole location adjustments are required, the contractor must gain approval from the Engineer as this may affect the mast arm lengths and arm attachment heights. The contractor may contact the Signal Design Section Senior Structural Engineer for assistance at (919) 814-5000.
9. The contractor is responsible for verifying that the mast arm length shown will allow proper positioning of the signal heads over the roadway.
10. The contractor is responsible for providing soil penetration testing data (SPT) to the pole manufacturer so site specific foundations can be designed.

RS&H
NC FIRM LICENSE No: F-0493
1520 SOUTH BOULEVARD, SUITE 200
CHARLOTTE, NC 28203
(704) 752-0610

NCDOT Wind Zone 5 (110 MPH)

DOCUMENT NOT CONSIDERED FINAL UNLESS ALL SIGNATURES COMPLETED

Prepared in the Offices of:
Transportation Mobility and Safety Division
Signal Design Section
750 N.Greenfield Pkwy,Garner,NC 27529

SR 5544 (West Catawba Avenue) at One Norman Way

Division 10 Mecklenburg County Cornelius

PLAN DATE:	July 2025	REVIEWED BY:	S.G. Haynie
PREPARED BY:	A.M. Kollar	REVIEWED BY:	

SCALE 0 N/A N/A

REVISIONS	INIT.	DATE

SEAL
NORTH CAROLINA PROFESSIONAL SEAL 029531 ENGINEER STEVEN G. HAYNIE
DocuSigned by: Steve Haynie 7/30/2025
DATE

SIG. INVENTORY NO. 10-1828

Docusign Envelope ID: 81F9EE35-EDEE-469B-9DFF-68C947E76F48

METAL POLE No. 3

PROJECT REFERENCE NO.	SHEET NO.
U-5906	Sig. 3.4

Design Loading for METAL POLE NO. 3

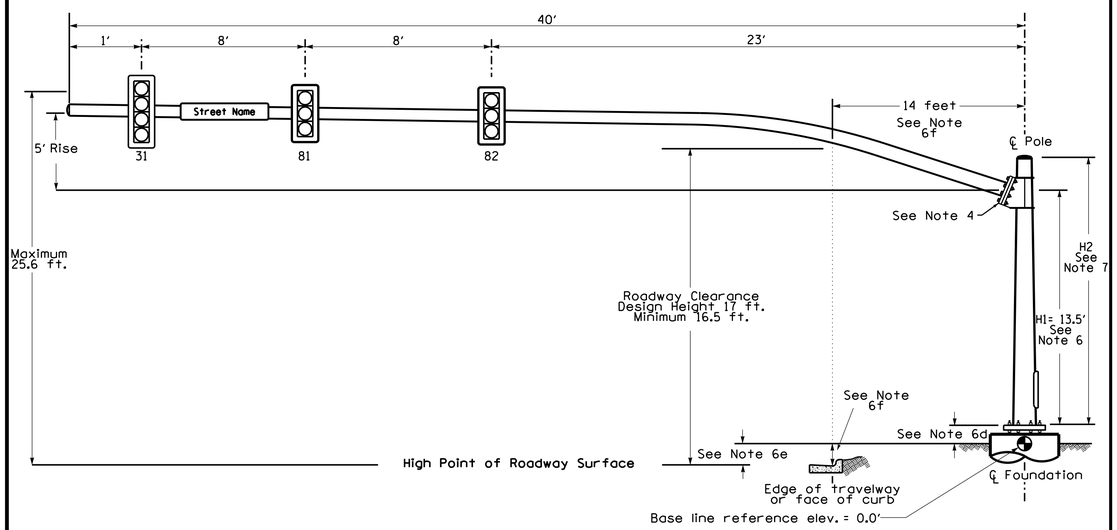

Elevation View

THIS SPACE INTENTIONALLY LEFT BLANK

SPECIAL NOTE

The contractor is responsible for verifying that the mast arm attachment height (H1) will provide the "Design Height" clearance from the roadway before submitting final shop drawings for approval. Verify elevation data below which was obtained by field measurement or from available project survey data.

Elevation Data for Mast Arm Attachment (H1)

Elevation Differences for:	Pole 3	N/A
Baseline reference point at ℄ Foundation @ ground level	0.00 ft.	N/A
Elevation difference at High point of roadway surface	-0.56 ft.	N/A
Elevation difference at Edge of travelway or face of curb	-1.32 ft.	N/A

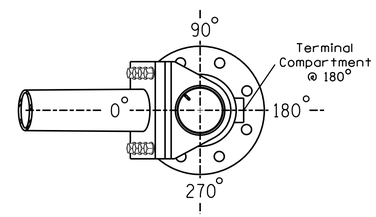

POLE RADIAL ORIENTATION

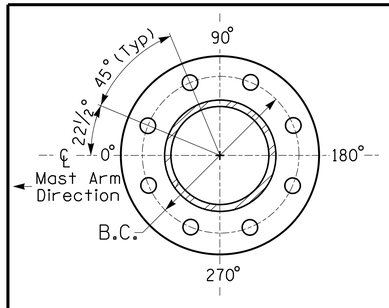

8 BOLT BASE PLATE DETAIL

See Note 5

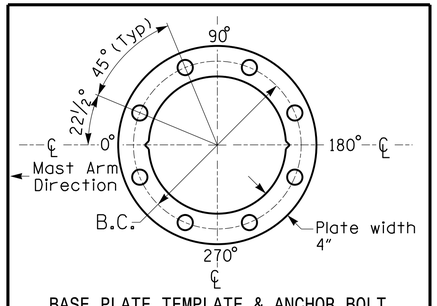

BASE PLATE TEMPLATE & ANCHOR BOLT LOCK PLATE DETAIL

For 8 Bolt Base Plate

MAST ARM LOADING SCHEDULE

LOADING SYMBOL	DESCRIPTION	AREA	SIZE	WEIGHT
	RIGID MOUNTED SIGNAL HEAD 12"-3 SECTION-WITH BACKPLATE	9.3 S.F.	25.5"W X 52.5"L	60 LBS
	RIGID MOUNTED SIGNAL HEAD 12"-4 SECTION-WITH BACKPLATE	11.7 S.F.	25.5"W X 66.0"L	74 LBS
Street Name	STREET NAME SIGN RIGID MOUNTED	16.0 S.F.	24.0"W X 96.0"L	36 LBS

DESIGN REFERENCE MATERIAL

1. Design the traffic signal structure and foundation in accordance with:
   - The 1st Edition 2015 AASHTO LRFD "Standard Specifications for Structural Supports for Highway Signs, Luminaires, and Traffic Signals, including all of the latest interim revisions.
   - The 2024 NCDOT "Standard Specifications for Roads and Structures." The latest addenda to the specifications can be found in the traffic signal project special provisions.
   - The 2024 NCDOT Roadway Standard Drawings.
   - The traffic signal project plans and special provisions.
   - The NCDOT "Metal Pole Standards" located at the following NCDOT website: https://connect.ncdot.gov/resources/safety/Pages/ITS-Design-Resources.aspx

DESIGN REQUIREMENTS

2. Design the traffic signal structure using the loading conditions shown in the elevation views. These are anticipated worst case "design loads" and may not represent the actual loads that will be applied at the time of the installation. The contractor should refer to the traffic signal plans for the actual loads that will be applied at the time of the installation.
3. Design all signal supports using force ratios that do not exceed 0.9.
4. A clamp-type bolted mast arm-to-pole connection may be used instead of the welded ring stiffened box connection shown as long as the connection meets all of the design requirements.
5. Design base plate with 8 anchor bolt holes. Provide 2 inch x 60 inch anchor bolts.
6. The mast arm attachment height (H1) shown is based on the following design assumptions:
   a. Nominal vertical rise in mast arm is 5 feet as measured from the centerline of the arm base to the centerline of the free end of the arm.
   b. Signal heads are rigidly mounted and vertically centered on the mast arm.
   c. The roadway clearance height for design is as shown in the elevation views.
   d. The top of the pole base plate is 0.75 feet above the ground elevation.
   e. Refer to the Elevation Data Chart for the elevation differences between the proposed foundation ground level and the high point of the roadway.
   f. Provide horizontal distance from the proposed centerline of the foundation to the edge of travelway. Refer to the Elevation Data Chart for elevation difference between the proposed foundation ground level and the edge of travelway. This information is necessary to ensure that the roadway clearance is maintained at the edge of the travelway and to aid in the camber design of the arm.
7. The pole manufacturer will determine the total height (H2) of each pole using the greater of the following:
   - Mast arm attachment height (H1) plus 2 feet, or
   - H1 plus 1/2 of the total height of the mast arm attachment assembly plus 1 foot.
8. If pole location adjustments are required, the contractor must gain approval from the Engineer as this may affect the mast arm lengths and arm attachment heights. The contractor may contact the Signal Design Section Senior Structural Engineer for assistance at (919) 814-5000.
9. The contractor is responsible for verifying that the mast arm length shown will allow proper positioning of the signal heads over the roadway.
10. The contractor is responsible for providing soil penetration testing data (SPT) to the pole manufacturer so site specific foundations can be designed.

All metal poles and arms should be BLACK in color as specified in the project special provisions.

RS&H
NC FIRM LICENSE No: F-0493
1520 SOUTH BOULEVARD, SUITE 200
CHARLOTTE, NC 28203
(704) 752-8610

NCDOT Wind Zone 5 (110 MPH)

DOCUMENT NOT CONSIDERED FINAL UNLESS ALL SIGNATURES COMPLETED

Prepared in the Offices of: Transportation Mobility and Safety Division, Department of Transportation, State of North Carolina, Signal Design Section
750 N.Greenfield Pkwy,Garner,NC 27529

SR 5544 (West Catawba Avenue) at One Norman Way

Division 10 Mecklenburg County Cornelius

PLAN DATE:	July 2025	REVIEWED BY:	S.G. Haynie
PREPARED BY:	A.M. Kollar	REVIEWED BY:	

REVISIONS	INIT.	DATE

SCALE 0 N/A N/A

SEAL
NORTH CAROLINA PROFESSIONAL SEAL 029531 ENGINEER STEVEN G. HAYNIE
DocuSigned: Steve Haynie 7/30/2025
DATE

SIG. INVENTORY NO. 10-1828

Docusign Envelope ID: 81F9EE35-EDEE-469B-9DFF-68C947E76F48

PROJECT REFERENCE NO.	SHEET NO.
U-5906	Sig. 4.0

PHASING DIAGRAM

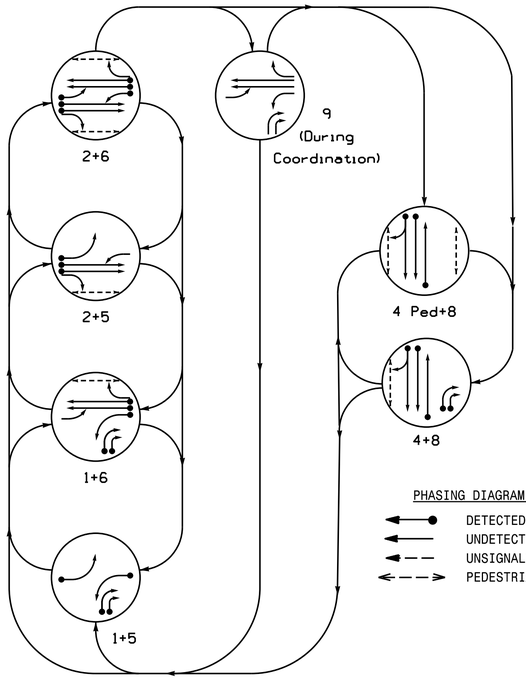

PHASING DIAGRAM DETECTION LEGEND

- DETECTED MOVEMENT
- UNDETECTED MOVEMENT (OVERLAP)
- UNSIGNALIZED MOVEMENT
- PEDESTRIAN MOVEMENT

TABLE OF OPERATION

SIGNAL FACE	PHASE 1+5	1+6	2+5	2+6	9	4 Ped+8	4+8	FLASH
11	—	—	F Y	F Y	—	R	R	R
21,22	R	R	G	G	R	R	R	R
23	R	R	F Y	F Y	R	R	R	R
41	R	R	R	R	R	|	|	R
42	R	R	R	R	R	G	G	R
43,44	→	→	R	R	→	R	F Y	R
51	—	F Y	—	F Y	F Y	R	R	R
61,62	R	G	R	G	G	R	R	R
63	R	F Y	R	F Y	F Y	R	R	R
81	R	R	R	R	R	|	|	R
82	R	R	R	R	R	G	G	R
P21,P22	DW	DW	W	W	DW	DW	DW	DRK
P41,P42	DW	DW	DW	DW	DW	W	DW	DRK
P61,P62	DW	W	DW	W	DW	DW	DW	DRK
P81,P82	DW	DW	DW	DW	DW	W	W	DRK

SIGNAL FACE I.D.

All Heads L.E.D.

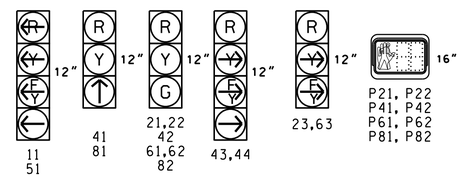

MAXTIME DETECTOR INSTALLATION CHART

DETECTOR					PROGRAMMING							
LOOP	SIZE (FT)	DISTANCE FROM STOPBAR (FT)	TURNS	NEW LOOP	CALL PHASE	DELAY TIME	EXTEND TIME	EXTEND	ADDED INITIAL	CALL	DELAY DURING GREEN	NEW CARD
1A	6X40	0	2-4-2	X	1/9	15.0	-	X	-	X	-	X
					6	-	-	X	-	X	-	X
1B	6X40	0	2-4-2	X	1	15.0	-	X	-	X	-	X
1C	6X40	0	2-4-2	X	1	15.0	-	X	-	X	-	X
2A	6X6	70	3	X	2	-	3.0	X	-	X	-	X
2B	6X6	70	3	X	2	-	3.0	X	-	X	-	X
4A	6X40	0	2-4-2	X	4	-	-	X	-	X	-	X
4B*	4X6	0	2-4-2 DIAG	X	4	10.0	-	-	-	X	·	X
5A	5X40	0	EXISTING	-	5	15.0	-	X	-	X	-	X
					2	-	-	X	-	X	X	X
6A	6X6	70	3	X	6	-	3.0	X	-	X	-	X
6B	6X6	70	3	X	6	-	3.0	X	-	X	-	X
8A	6X40	0	EXISTING	-	8	3.0	-	X	-	X	-	X
8B	6X40	0	EXISTING	-	8	15.0	-	X	-	X	-	X

*Set sensitivity to appropriate level to detect a bicycle

5 Phase
Fully Actuated w/ Phase Reservice
West Catawba Avenue CLS
D10-18 Cornelius

1. Refer to "Roadway Standard Drawings NCDOT" dated January 2024 and "Standard Specifications for Roads and Structures" dated January 2024.
2. Do not program signal for late night flashing operation unless otherwise directed by the Engineer.
3. Phase 1 and/or phase 5 may be lagged.
4. Set all detector units to presence mode.
5. Locate new cabinet so as not to obstruct sight distance of vehicles turning right on red.
6. Omit "WALK" and flashing "DON'T WALK" with no pedestrian calls.
7. Program pedestrian heads to countdown the flashing "Don't Walk" time only.
8. To provide a leading pedestrian interval on phase 2, program FYA heads numbered 11 & 23 to delay for 7 seconds after the start of the phase 2 walk interval. See Electrical Details for programming.
9. To provide a leading pedestrian interval on phase 6, program FYA heads numbered 51 & 63 to delay for 7 seconds after the start of the phase 6 walk interval. See Electrical Details for programming.
10. Remove existing Combined Through and Left Arrow Sign (R3-6L) sign, existing Left Arrow "ONLY" sign (R3-5L), and "TRUCKS AND BUSES" sign.
11. This signal utilizes a special ring configuration. See electrical details.
12. Phase 9 is used only during coordination.
13. Reassign loops 3A and 3B as 8A and 8B, respectively.
14. Reassign pedestrian heads P31 and P32 as P81 and P82.
15. Reassign signal head 32 as 82.
16. Maximum times shown in timing chart are for free-run operation only. Coordinated signal system timing values supersede these values.
17. The Division Traffic Engineer will determine pushbutton locations.
18. See U-5906 pavement marking plans for existing and proposed pavement markings.
19. Thirty days after implementation of the revised signal operation, orange flags may be removed at the discretion of the Regional Traffic Engineer.

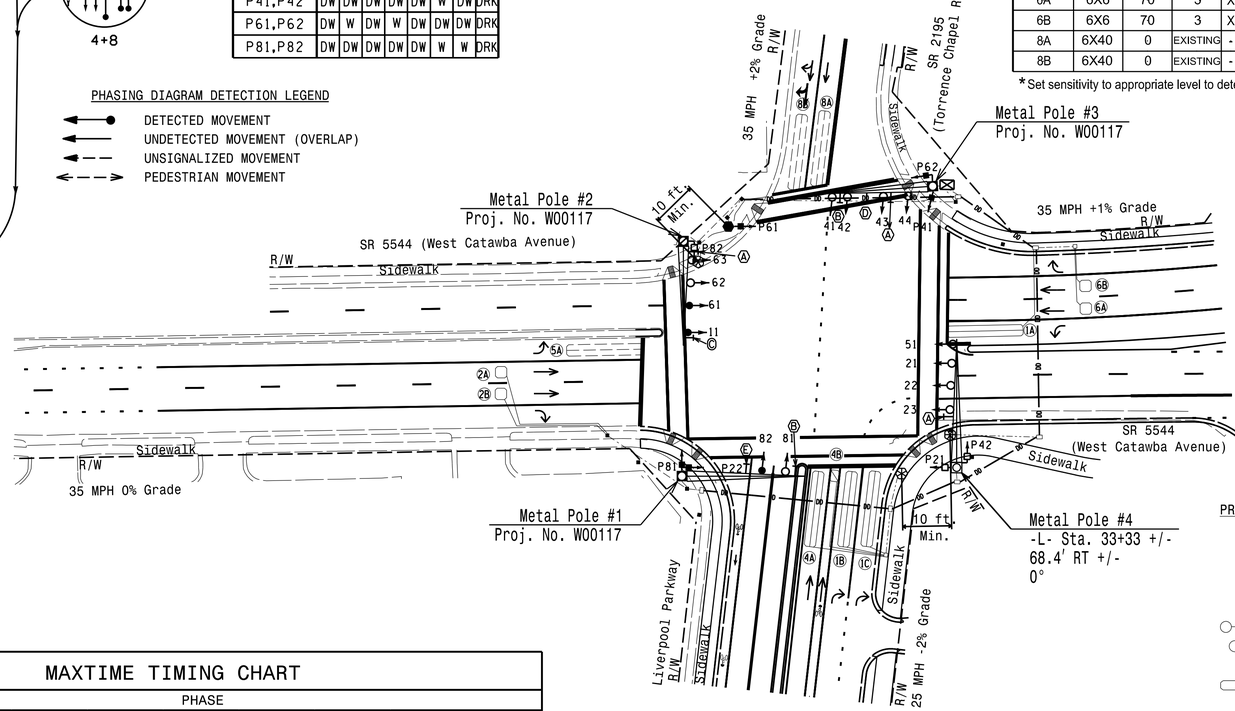

LEGEND

PROPOSED		EXISTING
	Traffic Signal Head	
	Modified Signal Head	N/A
	Sign	
	Pedestrian Signal Head With Push Button & Sign	
	Signal Pole with Guy	
	Signal Pole with Sidewalk Guy	
	Inductive Loop Detector	
	Controller & Cabinet	
	Junction Box	
	2-in Underground Conduit	
N/A	Right of Way	
	Directional Arrow	
	Oversized Junction Box	
	Type I Pushbutton Post	
	Type II Signal Pedestal	
DD	Directional Drill	N/A
	Metal Pole with Mastarm	
N/A	Curb Ramp	

SIGNS

PROPOSED		EXISTING
A	"RIGHT TURN SIGNAL" Sign (R10-10R)	A
B	No Left Turn Sign WITH ORANGE FLAGS (R3-2)	B
C	NO U-Turn Sign (R3-4)	C
D	"To Request Green Wait On Stop Bar" Bicycle Sign (R10-22)	D
E	Right Turn "YIELD TO U-TURN" Sign (R10-16)	E

MAXTIME TIMING CHART

FEATURE	PHASE 1	2	4	5	6	8	9	OL 5	OL 6
Walk *	–	14	14	–	14	12	–	–	–
Ped Clear	–	28	30	–	18	21	–		
Min Green *	7	10	7	7	10	7	7		
Passage *	2.0	3.0	2.0	2.0	3.0	2.0	2.0		
Max 1 *	20	60	30	20	60	30	60		
Yellow Change	3.0	3.8	3.7	3.0	3.8	3.7	3.8	3.8	3.8
Red Clear	3.3	3.0	3.5**	3.7	3.0	3.5**	2.8	2.8	2.8
Added Initial *	–	–	–	–	–	–	–		
Maximum Initial *	–	–	–	–	–	–	–		
Time Before Reduction *	–	–	–	–	–	–	–		
Time To Reduce *	–	–	–	–	–	–	–		
Minimum Gap	–	–	–	–	–	–	–		
Advance Walk	–	–	7	–	–	5	–		
Non Lock Detector	X	–	X	X	–	X	X		
Vehicle Recall	–	MIN RECALL	–	–	MIN RECALL	–	–		
Dual Entry	–	–	X	–	–	X	–		

* These values may be field adjusted. Do not adjust Min Green and Passage times for phases 2 and 6 lower than what is shown. Min Green for all other phases should not be lower than 4 seconds.

** Red clearance time increased to allow for cyclist traveling at 15 mph to clear the intersection. Do not reduce below this time.

RS&H
NC FIRM LICENSE No: F-0493
1520 SOUTH BOULEVARD, SUITE 200
CHARLOTTE, NC 28203
(704) 752-0610

Signal Upgrade

DOCUMENT NOT CONSIDERED FINAL UNLESS ALL SIGNATURES COMPLETED

Prepared for the Offices of:
Transportation Mobility and Safety Division
Signal Design Section
750 N.Greenfield Pkwy,Garner,NC 27529

SR 5544 (West Catawba Avenue)
at
SR 2195 (Torrence Chapel Road)/
Liverpool Parkway

Division 10 Mecklenburg County Cornelius

PLAN DATE:	July 2025	REVIEWED BY:	S.G. Haynie
PREPARED BY:	A.M. Kollar	REVIEWED BY:	

SCALE 1"=40'

REVISIONS	INIT.	DATE

SEAL
NORTH CAROLINA PROFESSIONAL SEAL 029531 ENGINEER STEVEN G. HAYNIE

DocuSigned by: Steve Haynie 7/30/2025
SIGNATURE DATE

SIG. INVENTORY NO. 10-0939

7/29/2025
X:\Projects\U5904015_U-5906 Torrence Chapel Rd\Design\Traffic\Signals\Plan Sheets\W00939_sig_dsn_20240BXX.dgn
1:18:08 PM

Docusign Envelope ID: 81F9EE35-EDEE-469B-9DFF-68C947E76F48

PROJECT REFERENCE NO.	SHEET NO.
U-5906	Sig. 4.1

18 CHANNEL IP CONFLICT MONITOR PROGRAMMING DETAIL

(remove jumpers and set switches as shown)

REMOVE DIODE JUMPERS 1-5, 1-6, 1-7, 1-9, 1-10, 1-11, 1-12, 1-15, 2-5, 2-6, 2-9, 2-10, 2-11, 2-13, 2-15, 2-18, 4-8, 4-12, 4-14, 4-16, 5-7, 5-9, 5-11, 5-12, 5-13, 5-18, 6-7, 6-9, 6-10, 6-11, 6-12, 6-13, 6-15, 6-18, 7-9, 7-10, 7-11, 7-12, 7-15, 8-12, 8-14, 8-16, 9-10, 9-11, 9-12, 9-13, 9-15, 9-18, 10-11, 10-12, 10-13, 10-15, 10-18, 11-12, 11-13, 11-15, 11-18, 12-15, 12-16, 13-15, 13-18, 14-16, AND 15-18.

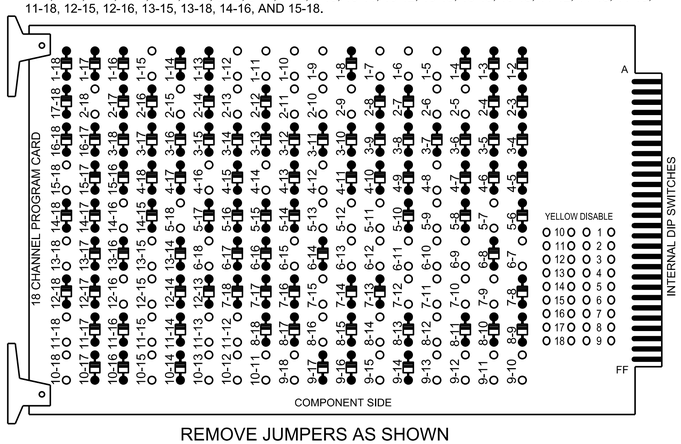

REMOVE JUMPERS AS SHOWN

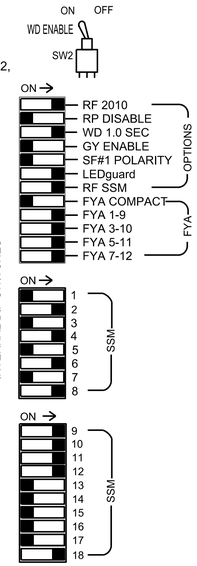

NOTES:

1. Card is provided with all diode jumpers in place. Removal of any jumper allows its channels to run concurrently.
2. Ensure jumpers SEL2-SEL5 and SEL9 are present on the monitor board.
3. Ensure that the Red Enable is active at all times during normal operation.
4. Integrate monitor with Ethernet network in cabinet.

INPUT FILE POSITION LAYOUT

(front view)

		1	2	3	4	5	6	7	8	9	1O	11	12	13	14
FILE "I"	U	Ø 1 1A	Ø 1 1B	Ø 2 2A	SLOT EMPTY	SLOT EMPTY	Ø 4 4A	SLOT EMPTY	SLOT EMPTY	SLOT EMPTY	SLOT EMPTY	SLOT EMPTY	Ø 2 PED DC ISOLATOR	Ø 6 PED DC ISOLATOR	FS DC ISOLATOR
	L	NOT USED	Ø 1 1C	Ø 2 2B			Ø 4 4B						Ø 4 PED DC ISOLATOR	Ø 8 PED DC ISOLATOR	ST DC ISOLATOR
FILE "J"	U	Ø 5 5A	Ø 6 6A	SLOT EMPTY	SLOT EMPTY	SLOT EMPTY	Ø 8 8A	SLOT EMPTY	SLOT EMPTY	SLOT EMPTY	SLOT EMPTY	SLOT EMPTY	SLOT EMPTY	SLOT EMPTY	SLOT EMPTY
	L	NOT USED	Ø 6 6B				Ø 8 8B								

EX. : 1A, 2A, ETC. = LOOP NO.'S

FS = FLASH SENSE
ST = STOP TIME

NOTE: Remove jumpers from I1-W to J4-W and J1-W to I4-W if present.

COUNTDOWN PEDESTRIAN SIGNAL OPERATION

Countdown Ped Signals are required to display timing only during Ped Clearance Interval. Consult Ped Signal Module user's manual for instructions on selecting this feature.

LOAD RESISTOR INSTALLATION DETAIL

(install resistors as shown)

ACCEPTABLE VALUES	
Value (ohms)	Wattage
1.5K - 1.9K	25W (min)
2.0K - 3.0K	10W (min)

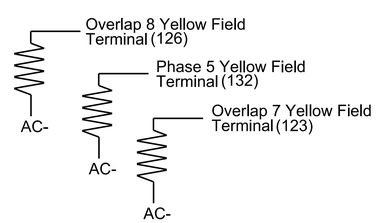

NOTES

1. To prevent "flash-conflict" problems, insert red flash program blocks for all vehicle load switches in the output file. The installer shall verify that signal heads flash in accordance with the signal plan.
2. Program phases 4 and 8 for Dual Entry.
3. Program controller to start up in phase 2 Green Walk and 6 Green Walk.
4. If this signal will be managed by an ATMS software, enable controller and detector logging for all detectors used at this location.
5. The cabinet and controller are part of the West Catawba Avenue CLS, D10-18 Cornelius.

EQUIPMENT INFORMATION

Controller.....2070LX
Cabinet.....332 w/ Aux
Software.....Q-Free MAXTIME
Cabinet Mount.....Base
Output File Positions.....18 With Aux. Output File
Load Switches Used.....S1, S2, S3, S5, S6, S7, S8, S9, S10, S11, S12, AUX S1, AUX S2, AUX S4, AUX S5, AUX S6
Phases Used.....1, 2, 2PED, 4, 4PED, 5, 6, 6PED, 7, 8, 8PED, **9
Overlap "1".....*
Overlap "2".....*
Overlap "3".....*
Overlap "4".....*
Overlap "5".....NOT USED
Overlap "6".....*
Overlap "7".....*
Overlap "8".....*
Overlap "9".....*

*See overlap programming detail on sheet 2

**Phase used only during Coordination run.

INPUT FILE CONNECTION & PROGRAMMING CHART

LOOP NO.	LOOP TERMINAL	INPUT FILE POS.	PIN NO.	INPUT POINT	DETECTOR NO.	CALL PHASE	DELAY TIME	EXTEND TIME	EXTEND	ADDED INITIAL	CALL	DELAY DURING GREEN
1A	TB2-1,2	I1U	56	18	1	1	15.0	...	X	_	X	_
				-	29	6	...	...	X	_	X	X
1B	TB2-5,6	I2U	39	1	2	2	15.0	...	X	_	X	_
1C	TB2-7,8	I2L	43	5	3	2	15.0	...	X	_	X	_
2A	TB2-9,10	I3U	63	29	4	2	...	3.0	X	_	X	_
2B	TB2-11,12	I3L	76	42	5	2	...	3.0	X	_	X	_
4A	TB4-9,10	I6U	41	3	8	4	...	...	X	_	X	_
4B	TB4-11,12	I6L	45	7	9	4	10.0	...	X	_	X	_
5A	TB3-1,2	J1U	55	17	15	5	15.0	...	X	_	X	_
				-	31	2	3.0	...	X	_	X	X
6A	TB3-5,6	J2U	40	2	16	6	...	3.0	X	_	X	_
6B	TB3-7,8	J2L	44	6	17	6	...	3.0	X	_	X	_
8A	TB5-9,10	J6U	42	4	22	8	3.0	...	X	_	X	_
8B	TB5-11,12	J6L	46	8	23	8	15.0	...	X	_	X	_
PED PUSH BUTTONS												
P21;P22	TB8-4,6	I12U	67	33	2	PED 2						
P41;P42	TB8-5,6	I12L	69	35	4	PED 4						
P61;P62	TB8-7,9	I13U	68	34	6	PED 6						
P81;P82	TB8-8,9	I13L	70	36	8	PED 8						

NOTE:
INSTALL DC ISOLATORS IN INPUT FILE SLOTS I12 AND I13.

INPUT FILE POSITION LEGEND: J2L
FILE J
SLOT 2
LOWER

SIGNAL HEAD HOOK-UP CHART

LOAD SWITCH NO.	S1	S2	S3	S4	S5		S6	S7	S8	S9	S10	S11		S12	AUX S1	AUX S2	AUX S3	AUX S4	AUX S5	AUX S6
CMU CHANNEL NO.	1	2	13	3	4		14	5	6	15	7	8		16	9	10	17	11	12	18
PHASE	OL8	2	2 PED	3	4		4 PED	5	OL9	6 PED	OL7	8		8 PED	OL1	OL2	SPARE	OL3	OL4	OL6
SIGNAL HEAD NO.	11★	21,22	P21, P22	NU	41	42	P41, P42	51★	61,62	P61, P62	43,44★	81	82	P81, P82	11★	63★	NU	51★	43,44★	23★
RED		128			101	101			134			107	107			A124			A101	A104
YELLOW	*	129			102	102		*	135		*	108	108							
GREEN		130				103			136				109							
RED ARROW															A121			A114		
YELLOW ARROW															A122	A125		A115	A102	A105
FLASHING YELLOW ARROW															A123	A126		A116	A103	A106
GREEN ARROW	127				103			133			124	109								
✋			113				104			119				110						
🚶			115				106			121				112						

NU = Not Used
* Denotes install load resistor. See load resistor installation detail this sheet.
★ See pictorial of head wiring in detail this sheet.

FYA SIGNAL WIRING DETAIL

(wire signal heads as shown)

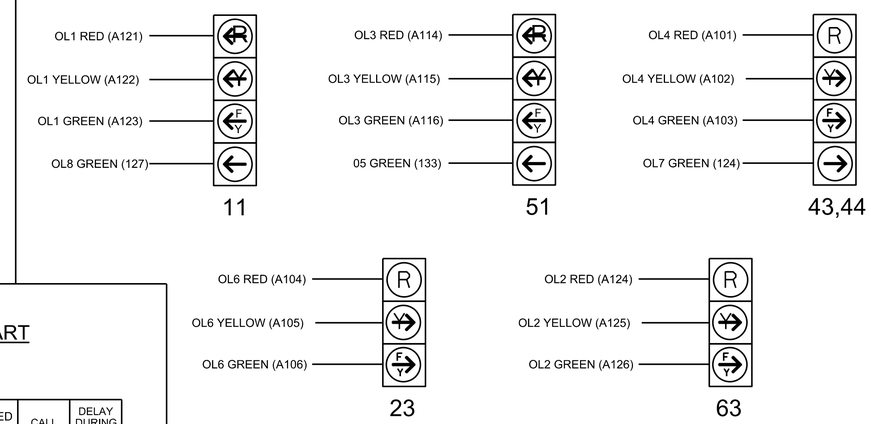

1. The sequence display for this signal requires special logic programming. See sheet 2 for programming instructions.

THIS ELECTRICAL DETAIL IS FOR
THE SIGNAL DESIGN: 10-0939
DESIGNED: July 2025
SEALED: 7/30/2025
REVISED: N/A

Electrical Detail - Sheet 1 of 2

DOCUMENT NOT CONSIDERED FINAL UNLESS ALL SIGNATURES COMPLETED

ELECTRICAL AND PROGRAMMING DETAILS FOR:

SR 5544 (West Catawba Avenue) at SR 2195 (Torrence Chapel Road)/ Liverpool Parkway

Division 10 Mecklenburg County Cornelius

PLAN DATE: July 2025	REVIEWED BY: D. Drobny
PREPARED BY: S.G. Haynie	REVIEWED BY:

REVISIONS	INIT.	DATE

SEAL

NORTH CAROLINA PROFESSIONAL SEAL 029531 ENGINEER STEVEN G. HAYNIE

DocuSigned by: Steve Haynie 7/30/2025
SIGNATURE DATE

SIG. INVENTORY NO. 10-0939

Prepared for the Offices of:
Traffic Engineering, Signal Design & Signal Management Section
Transportation Mobility and Safety Division
STATE OF NORTH CAROLINA DEPARTMENT OF TRANSPORTATION
750 N.Greenfield Pkwy,Garner,NC 27529

RS&H
NC FIRM LICENSE No: F-0493
1520 SOUTH BOULEVARD, SUITE 200
CHARLOTTE, NC 28203
(704) 752-0610

7/30/2025
X:\Projects\2020\49015_U-5906 Torrence Chapel\Design\Traffic\Signals\Plan Sheets\10939_smelts_20250414X.dgn
8:37:35 AM

Docusign Envelope ID: 81F9EE35-EDEE-469B-9DFF-68C947E76F48

PROJECT REFERENCE NO.	SHEET NO.
U-5906	Sig. 4.2

OVERLAP PROGRAMMING

Front Panel
Main Menu >Controller >Overlap >Overlap Parameters/Overlap Timings

Web Interface
Home >Controller >Overlap Configuration >Overlaps

Overlap Plan 1

Overlap	1	2	3	4	6	7	8	9
Type	FYA 4 - Section	FYA 4 - Section	FYA 4 - Section	FYA 4 - Section	FYA 4 - Section	Normal	Normal	Normal
Included Phases	2	6, 9	6, 9	4	2	1, 9	1, 9	6, 9
Modifier Phases	1, 9	-	5	1, 9	-	-	-	-
Modifier Overlaps	-	-	-	-	-	-	-	-
Trail Green	0	0	0	0	0	0	0	0
Trail Yellow	0.0	0.0	0.0	0.0	0.0	0.0	0.0	0.0
Trail Red	0.0	0.0	0.0	0.0	0.0	0.0	0.0	0.0
Negative Peds	-	-	-	4	-	-	-	-

OUTPUT CHANNEL CONFIGURATION

Front Panel
Main Menu >Controller >More>Channels>Channels Config

Web Interface
Home >Controller >Advanced IO>Channels>Channel Configuration

Channel Configuration

Channel	Control Type	Control Source	Flash Yellow	Flash Red	Flash Alt	MMU Channel
1	Overlap	8		X	X	1
2	Phase Vehicle	2		X		2
3	Phase Vehicle	3		X	X	3
4	Phase Vehicle	4		X		4
5	Phase Vehicle	5		X		5
6	Overlap	9		X	X	6
7	Overlap	7		X		7
8	Phase Vehicle	8		X	X	8
9	Overlap	1		X	X	9
10	Overlap	2		X	X	10
11	Overlap	3		X		11
12	Overlap	4		X		12
13	Phase Ped	2				13
14	Phase Ped	4				14
15	Phase Ped	6				15
16	Phase Ped	8				16
17	Overlap	5		X	X	17
18	Overlap	6		X		18

MAXTIME STARTUP AND SOFTWARE FLASH PROGRAMMING DETAIL

Front Panel
Main Menu >Controller >Unit

Web Interface
Home >Controller >Unit

Modify parameters as shown below and save changes.

Start Up Parameters

StartUp Clearance Hold
6

Unit Flash Parameters

All Red Flash Exit Time
6

SEQUENCE DETAIL

Front Panel
Main Menu >Controller >Sequence & Phs Config>Sequences

Web Interface
Home >Controller >Sequence

Sequence 1

Ring	Sequence Data
1	1,2,a,9,b,4,c
2	5,6,a,b,8,c

THIS ELECTRICAL DETAIL IS FOR
THE SIGNAL DESIGN: 10-0939
DESIGNED: July 2025
SEALED: 7/30/2025
REVISED: N/A

Electrical Detail - Sheet 2 of 2

DOCUMENT NOT CONSIDERED FINAL UNLESS ALL SIGNATURES COMPLETED

ELECTRICAL AND PROGRAMMING DETAILS FOR:

SR 5544 (West Catawba Avenue)
at
SR 2195 (Torrence Chapel Road)/
Liverpool Parkway

Division 10 Mecklenburg County Cornelius

PLAN DATE:	July 2025	REVIEWED BY:	S.G. Haynie
PREPARED BY:	A.M. Kollar	REVIEWED BY:	

REVISIONS	INIT.	DATE

Prepared for the Offices of:
Transportation Mobility and Safety Division
STATE OF NORTH CAROLINA DEPARTMENT OF TRANSPORTATION
Signals Management Group
750 N.Greenfield Pkwy,Garner,NC 27529

RS&H
NC FIRM LICENSE No: F-0493
1520 SOUTH BOULEVARD, SUITE 200
CHARLOTTE, NC 28203
(704) 752-0610

SEAL
NORTH CAROLINA PROFESSIONAL SEAL 029531 ENGINEER STEVEN C. HAYNIE

DocuSigned by: Steve Haynie 7/30/2025
SIGNATURE DATE

SIG. INVENTORY NO. 10-0939

7/30/2025
V:\Projects\0049015_U-5906 Torrence Chapel Rd\Design\Traffic\Signals\Plan Sheets\100939_sm_ele_20250XXX.dgn
8:37:40 AM

Docusign Envelope ID: 81F9EE35-EDEE-469B-9DFF-68C947E76F48

METAL POLE No. 2 and 3

PROJECT REFERENCE NO.	SHEET NO.
U-5906	Sig. 4.3

Design Loading for Existing METAL POLE NO. 2 (Formerly NO. 11 Proj. No. W00117)

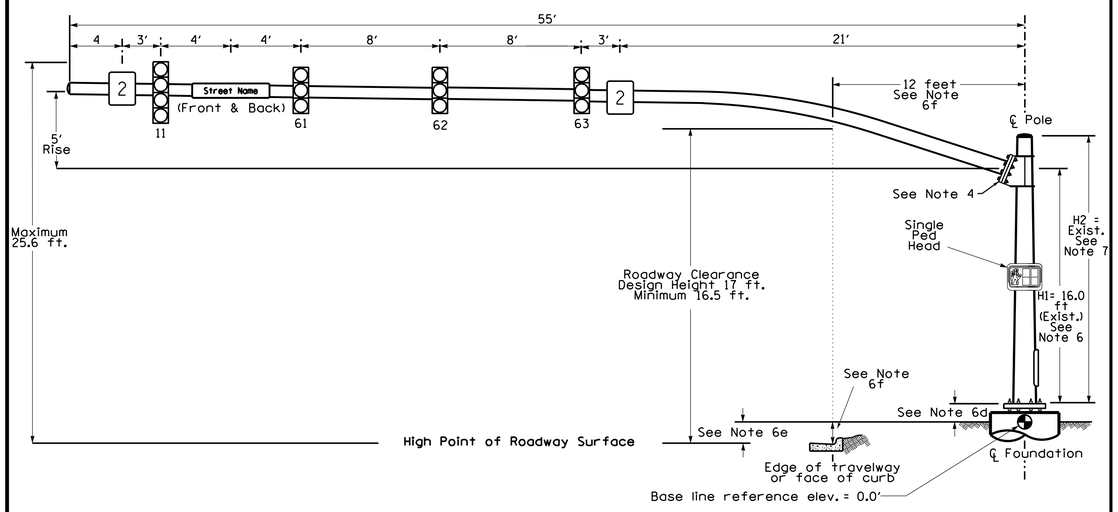

Elevation View

Design Loading for Existing METAL POLE NO. 3 (Formerly NO. 12 Proj. No. W00117)

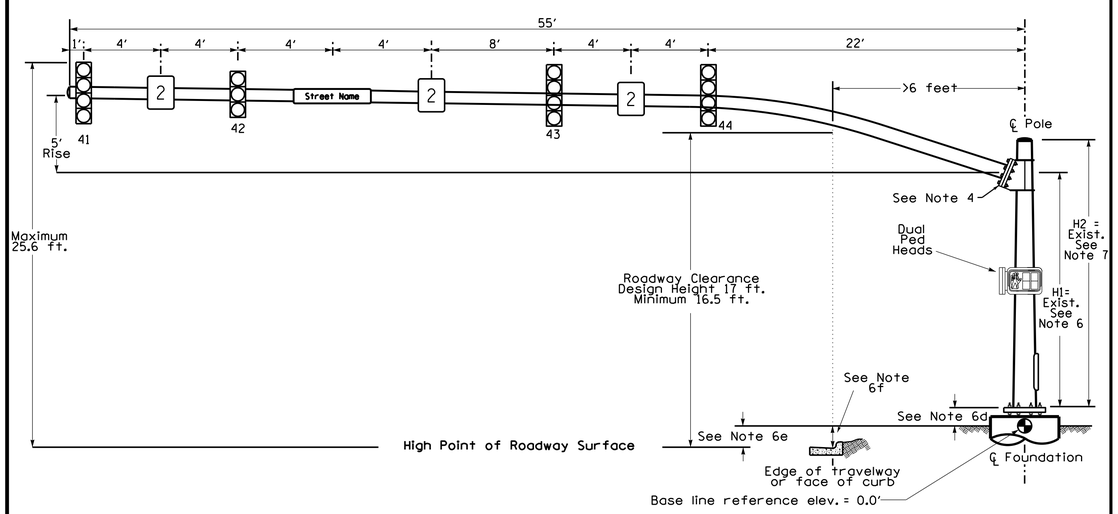

Elevation View

SPECIAL NOTE

The contractor is responsible for verifying that the mast arm attachment height (H1) will provide the "Design Height" clearance from the roadway before submitting final shop drawings for approval. Verify elevation data below which was obtained by field measurement or from available project survey data.

Elevation Data for Mast Arm Attachment (H1)

Elevation Differences for:	Pole 2	Pole 3
Baseline reference point at ℄ Foundation @ ground level	Exist.	Exist.
Elevation difference at High point of roadway surface	Exist.	Exist.
Elevation difference at Edge of travelway or face of curb	Exist.	Exist.

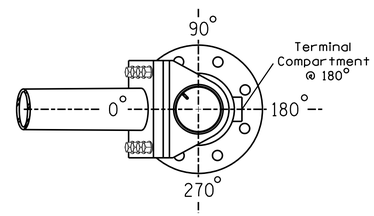

POLE RADIAL ORIENTATION

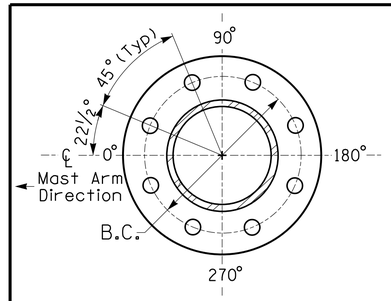

8 BOLT BASE PLATE DETAIL

See Note 5

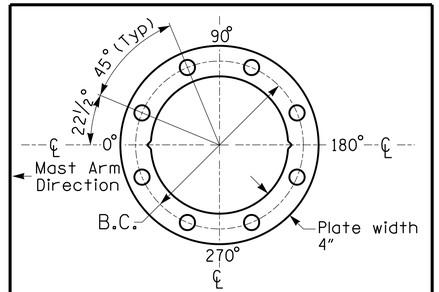

BASE PLATE TEMPLATE & ANCHOR BOLT LOCK PLATE DETAIL

For 8 Bolt Base Plate

MAST ARM LOADING SCHEDULE

LOADING SYMBOL	DESCRIPTION	AREA	SIZE	WEIGHT
	POLYCARBONATE RIGID MOUNTED SIGNAL HEAD 12"-4 SECTION-NO BACKPLATE	5.6 S.F.	14.0"W X 56.0"L	62.5 LBS
	POLYCARBONATE RIGID MOUNTED SIGNAL HEAD 12"-3 SECTION-NO BACKPLATE	4.2 S.F.	14.0"W X 43.0"L	38 LBS
2	SIGN RIGID MOUNTED	7.5 S.F.	30.0"W X 36.0"L	14 LBS
Street Name	STREET NAME SIGN RIGID MOUNTED	16.0 S.F.	24.0"W X 96.0"L	36 LBS

NOTES

DESIGN REFERENCE MATERIAL

1. Design the traffic signal structure and foundation in accordance with:
   - The 1st Edition 2015 AASHTO LRFD "Standard Specifications for Structural Supports for Highway Signs, Luminaires, and Traffic Signals, including all of the latest interim revisions.
   - The 2024 NCDOT "Standard Specifications for Roads and Structures." The latest addenda to the specifications can be found in the traffic signal project special provisions.
   - The 2024 NCDOT Roadway Standard Drawings.
   - The traffic signal project plans and special provisions.
   - The NCDOT "Metal Pole Standards" located at the following NCDOT website: https://connect.ncdot.gov/resources/safety/Pages/ITS-Design-Resources.aspx

DESIGN REQUIREMENTS

2. Design the traffic signal structure using the loading conditions shown in the elevation views. These are anticipated worst case "design loads" and may not represent the actual loads that will be applied at the time of the installation. The contractor should refer to the traffic signal plans for the actual loads that will be applied at the time of the installation.
3. Design all signal supports using force ratios that do not exceed 0.9.
4. A clamp-type bolted mast arm-to-pole connection may be used instead of the welded ring stiffened box connection shown as long as the connection meets all of the design requirements.
5. Design base plate with 8 anchor bolt holes. Provide 2 inch x 60 inch anchor bolts.
6. The mast arm attachment height (H1) shown is based on the following design assumptions:
   a. Nominal vertical rise in mast arm is 5 feet as measured from the centerline of the arm base to the centerline of the free end of the arm.
   b. Signal heads are rigidly mounted and vertically centered on the mast arm.
   c. The roadway clearance height for design is as shown in the elevation views.
   d. The top of the pole base plate is 0.75 feet above the ground elevation.
   e. Refer to the Elevation Data Chart for the elevation differences between the proposed foundation ground level and the high point of the roadway.
   f. Provide horizontal distance from the proposed centerline of the foundation to the edge of travelway. Refer to the Elevation Data Chart for elevation difference between the proposed foundation ground level and the edge of travelway. This information is necessary to ensure that the roadway clearance is maintained at the edge of the travelway and to aid in the camber design of the arm.
7. The pole manufacturer will determine the total height (H2) of each pole using the greater of the following:
   - Mast arm attachment height (H1) plus 2 feet, or
   - H1 plus 1/2 of the total height of the mast arm attachment assembly plus 1 foot.
8. If pole location adjustments are required, the contractor must gain approval from the Engineer as this may affect the mast arm lengths and arm attachment heights. The contractor may contact the Signal Design Section Senior Structural Engineer for assistance at (919) 814-5000.
9. The contractor is responsible for verifying that the mast arm length shown will allow proper positioning of the signal heads over the roadway.
10. The contractor is responsible for providing soil penetration testing data (SPT) to the pole manufacturer so site specific foundations can be designed.

RS&H
NC FIRM LICENSE No: F-0493
1520 SOUTH BOULEVARD, SUITE 200
CHARLOTTE, NC 28203
(704) 332-0610

NCDOT Wind Zone 5 (110 mph)

DOCUMENT NOT CONSIDERED FINAL UNLESS ALL SIGNATURES COMPLETED

Prepared in the Offices of:
Transportation Mobility and Safety Division
STATE OF NORTH CAROLINA DEPARTMENT OF TRANSPORTATION
Signal Design Section
750 N.Greenfield Pkwy,Garner,NC 27529

SR 5544 (West Catawba Avenue) at SR 2195 (Torrence Chapel Road)/ Liverpool Parkway

Division 10 Mecklenburg County Cornelius

PLAN DATE: July 2025 REVIEWED BY: S.G. Haynie
PREPARED BY: A.M. Kollar REVIEWED BY:

SCALE 0 N/A N/A

REVISIONS	INIT.	DATE

SEAL
NORTH CAROLINA PROFESSIONAL SEAL 029531 ENGINEER STEVEN G. HAYNIE
DocuSigned by: Steve Haynie 7/30/2025
DATE

SIG. INVENTORY NO. 10-0939

7/16/2025
1:40:00 PM
U:\U5906\049015_U-5906 Torrence Chapel\Design\Traffic\Signals\Plan Sheets\100939_sig_m2 & 3_20250528.dgn
4:22:23 PM

Docusign Envelope ID: 81F9EE35-EDEE-469B-9DFF-68C947E76F48

METAL POLE No. 4

PROJECT REFERENCE NO.	SHEET NO.
U-5906	Sig. 4.4

Design Loading for METAL POLE NO. 4

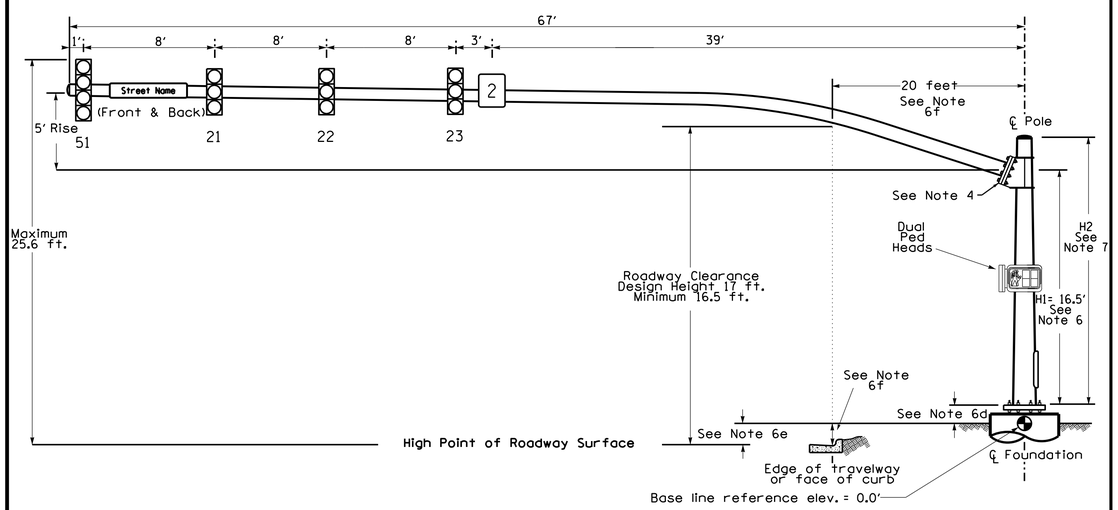

Elevation View

THIS SPACE INTENTIONALLY LEFT BLANK

SPECIAL NOTE

The contractor is responsible for verifying that the mast arm attachment height (H1) will provide the "Design Height" clearance from the roadway before submitting final shop drawings for approval. Verify elevation data below which was obtained by field measurement or from available project survey data.

Elevation Data for Mast Arm Attachment (H1)

Elevation Differences for:	Pole 4	N/A
Baseline reference point at ℄ Foundation @ ground level	0.0 ft.	N/A
Elevation difference at High point of roadway surface	+2.39 ft.	N/A
Elevation difference at Edge of travelway or face of curb	+2.10 ft.	N/A

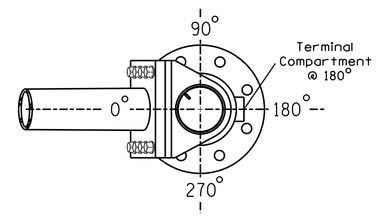

POLE RADIAL ORIENTATION

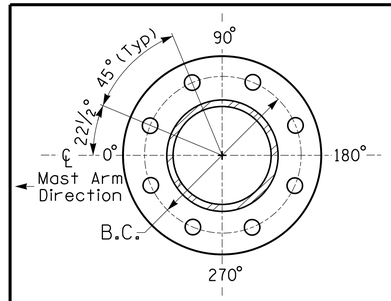

8 BOLT BASE PLATE DETAIL

See Note 5

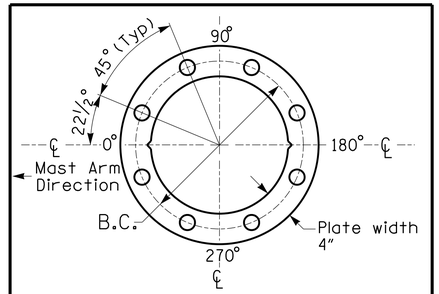

BASE PLATE TEMPLATE & ANCHOR BOLT LOCK PLATE DETAIL

For 8 Bolt Base Plate

MAST ARM LOADING SCHEDULE

LOADING SYMBOL	DESCRIPTION	AREA	SIZE	WEIGHT
	POLYCARBONATE RIGID MOUNTED SIGNAL HEAD 12"-4 SECTION-NO BACKPLATE	5.6 S.F.	14.0"W X 56.0"L	62.5 LBS
	POLYCARBONATE RIGID MOUNTED SIGNAL HEAD 12"-3 SECTION-NO BACKPLATE	4.2 S.F.	14.0"W X 43.0"L	38 LBS
2	SIGN RIGID MOUNTED	7.5 S.F.	30.0"W X 36.0"L	14 LBS
Street Name	STREET NAME SIGN RIGID MOUNTED	16.0 S.F.	24.0"W X 96.0"L	36 LBS

NOTES

DESIGN REFERENCE MATERIAL

1. Design the traffic signal structure and foundation in accordance with:
   - The 1st Edition 2015 AASHTO LRFD "Standard Specifications for Structural Supports for Highway Signs, Luminaires, and Traffic Signals, including all of the latest interim revisions.
   - The 2024 NCDOT "Standard Specifications for Roads and Structures." The latest addenda to the specifications can be found in the traffic signal project special provisions.
   - The 2024 NCDOT Roadway Standard Drawings.
   - The traffic signal project plans and special provisions.
   - The NCDOT "Metal Pole Standards" located at the following NCDOT website: https://connect.ncdot.gov/resources/safety/Pages/ITS-Design-Resources.aspx

DESIGN REQUIREMENTS

2. Design the traffic signal structure using the loading conditions shown in the elevation views. These are anticipated worst case "design loads" and may not represent the actual loads that will be applied at the time of the installation. The contractor should refer to the traffic signal plans for the actual loads that will be applied at the time of the installation.
3. Design all signal supports using force ratios that do not exceed 0.9.
4. A clamp-type bolted mast arm-to-pole connection may be used instead of the welded ring stiffened box connection shown as long as the connection meets all of the design requirements.
5. Design base plate with 8 anchor bolt holes. Provide 2 inch x 60 inch anchor bolts.
6. The mast arm attachment height (H1) shown is based on the following design assumptions:
   a. Nominal vertical rise in mast arm is 5 feet as measured from the centerline of the arm base to the centerline of the free end of the arm.
   b. Signal heads are rigidly mounted and vertically centered on the mast arm.
   c. The roadway clearance height for design is as shown in the elevation views.
   d. The top of the pole base plate is 0.75 feet above the ground elevation.
   e. Refer to the Elevation Data Chart for the elevation differences between the proposed foundation ground level and the high point of the roadway.
   f. Provide horizontal distance from the proposed centerline of the foundation to the edge of travelway. Refer to the Elevation Data Chart for elevation difference between the proposed foundation ground level and the edge of travelway. This information is necessary to ensure that the roadway clearance is maintained at the edge of the travelway and to aid in the camber design of the arm.
7. The pole manufacturer will determine the total height (H2) of each pole using the greater of the following:
   - Mast arm attachment height (H1) plus 2 feet, or
   - H1 plus 1/2 of the total height of the mast arm attachment assembly plus 1 foot.
8. If pole location adjustments are required, the contractor must gain approval from the Engineer as this may affect the mast arm lengths and arm attachment heights. The contractor may contact the Signal Design Section Senior Structural Engineer for assistance at (919) 814-5000.
9. The contractor is responsible for verifying that the mast arm length shown will allow proper positioning of the signal heads over the roadway.
10. The contractor is responsible for providing soil penetration testing data (SPT) to the pole manufacturer so site specific foundations can be designed.

All metal poles and arms should be BLACK in color as specified in the project special provisions.

RS&H
NC FIRM LICENSE No: F-0493
1520 SOUTH BOULEVARD, SUITE 200
CHARLOTTE, NC 28203
(704) 752-8610

NCDOT Wind Zone 5 (110 mph)

DOCUMENT NOT CONSIDERED FINAL UNLESS ALL SIGNATURES COMPLETED

Prepared in the Offices of: Transportation Mobility and Safety Division, Signal Design Section, 750 N.Greenfield Pkwy,Garner,NC 27529

SR 5544 (West Catawba Avenue) at SR 2195 (Torrence Chapel Road)/ Liverpool Parkway

Division 10 Mecklenburg County Cornelius

PLAN DATE: July 2025	REVIEWED BY: S.G. Haynie
PREPARED BY: A.M. Kollar	REVIEWED BY:

SCALE 0 N/A N/A

REVISIONS	INIT.	DATE

SEAL

NORTH CAROLINA PROFESSIONAL SEAL 029531 ENGINEER STEVEN G. HAYNIE

DocuSigned by: Steve Haynie 7/30/2025

DATE

SIG. INVENTORY NO. 10-0939

7/16/2025
X:\Work\20249015.U-5906 Torrence Chapel\Design\Traffic\Signals\Plan Sheets\100939_sig_m4_202408XX.dgn
4:23:09 PM

Docusign Envelope ID: 81F9EE35-EDEE-469B-9DFF-68C947E76F48

PROJECT I.D.NO.	SHEET NO.
U-5906	Sig.M1A

STATE OF NORTH CAROLINA
DIVISION OF HIGHWAYS

STANDARD DRAWINGS FOR ALL METAL POLES (LRFD)

POLE STANDARDS

NCDOT METAL

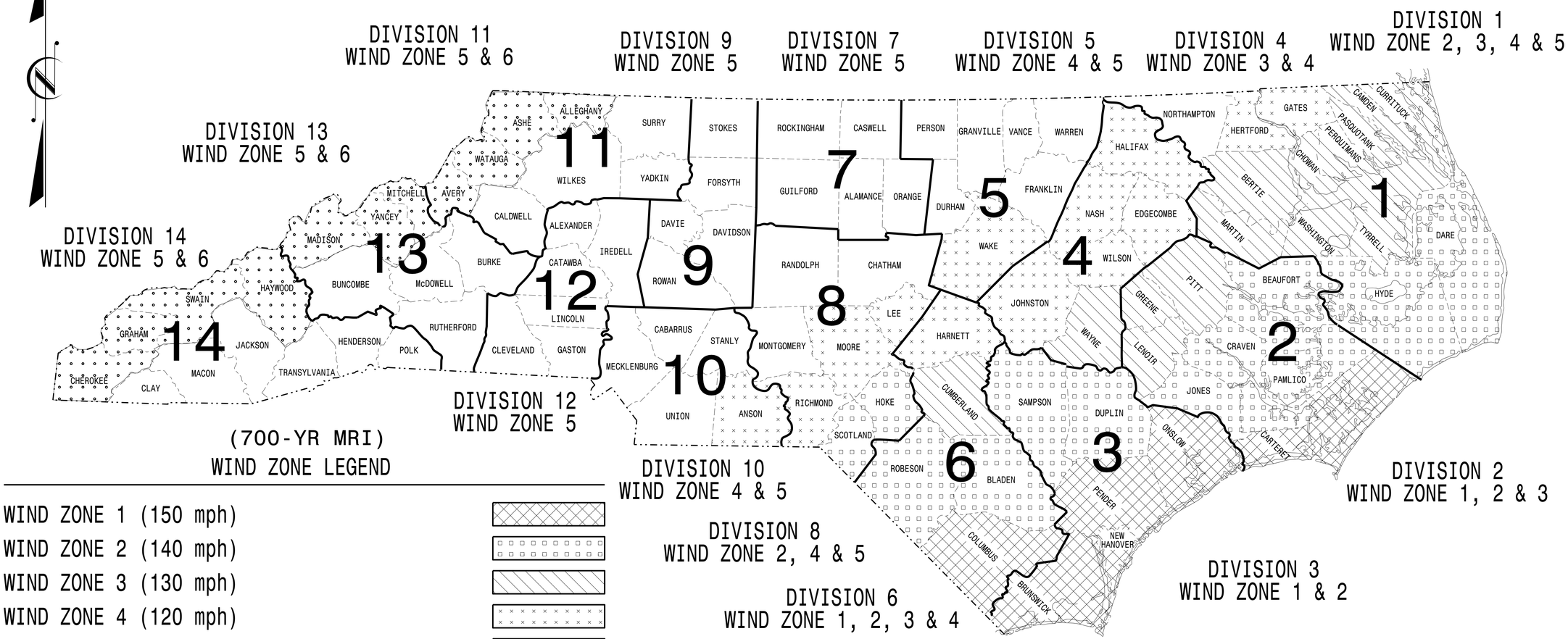

(700-YR MRI)
WIND ZONE LEGEND

- WIND ZONE 1 (150 mph)
- WIND ZONE 2 (140 mph)
- WIND ZONE 3 (130 mph)
- WIND ZONE 4 (120 mph)
- WIND ZONE 5 (110 mph)
- WIND ZONE 6 (135 mph) Special Wind Zone

https://connect.ncdot.gov/resources/safety/Pages/ITS-Design-Resources.aspx

Prepared in the Offices of:

Transportation Mobility and Safety Division
STATE OF NORTH CAROLINA DEPARTMENT OF TRANSPORTATION
Signal Design Section

750 N.Greenfield Pkwy.
Garner,NC 27529

Designed in conformance with the latest 2020 Interim to the 1st Edition 2015

AASHTO LRFD

Standard Specifications for Highway Signs, Luminaires, and Traffic Signals

INDEX OF PLANS

DRAWING NUMBER	DESCRIPTION
Sig. M 1A	Statewide Wind Zone Map (700–yr MRI)
Sig. M 1B	Statewide Wind Zone Map (10–yr MRI)
Sig. M 2	Typical Fabrication Details–All Metal Poles
Sig. M 3	Typical Fabrication Details–Strain Poles
Sig. M 4	Typical Fabrication Details–Mast Arm Poles
Sig. M 5	Typical Fabrication Details–Mast Arm Connection
Sig. M 6	Typical Fabrication Details–Strain Pole Attachments
Sig. M 7	Construction Details–Foundations
Sig. M 8	Standard Strain Pole Foundation–All Soil Conditions
Sig. M 9	Typical Fabrication Details–CCTV Camera Poles

MOBILITY AND SAFETY DIVISION – TRANSPORTATION SYSTEMS MANAGEMENT AND OPERATIONS UNIT

D.Y. ISHAK – STATE SIGNALS ENGINEER

K. DURIGON, P.E. – ITS AND SIGNALS STRUCTURAL ENGINEER

B. WALKER, P.E. – ITS AND SIGNALS STRUCTURAL ENGINEER

SEAL

NORTH CAROLINA PROFESSIONAL SEAL 036626 ENGINEER KEVIN C. DURIGON

DocuSigned by:
Kevin Durigon
SIGNATURE
4B23DC79B3784DA...
09/21/2023
DATE

03-OCT-2023 12:07
S:*ITSSUM*ITS Signals*Signal Design Sections*Structures*Drawings*2024 Metal Pole Std Drawings for LRFD*2024 Sig. M1A Standard All Metal Pole (700-yr MRI).dgn
kdurigon

Docusign Envelope ID: 81F9EE35-EDEE-469B-9DFF-68C947E76F48

NCDOT METAL POLE STANDARDS

PROJECT I.D.NO.	SHEET NO.
U-5906	Sig.M1B

STATE OF NORTH CAROLINA
DIVISION OF HIGHWAYS

STANDARD DRAWINGS FOR ALL METAL POLES (LRFD)

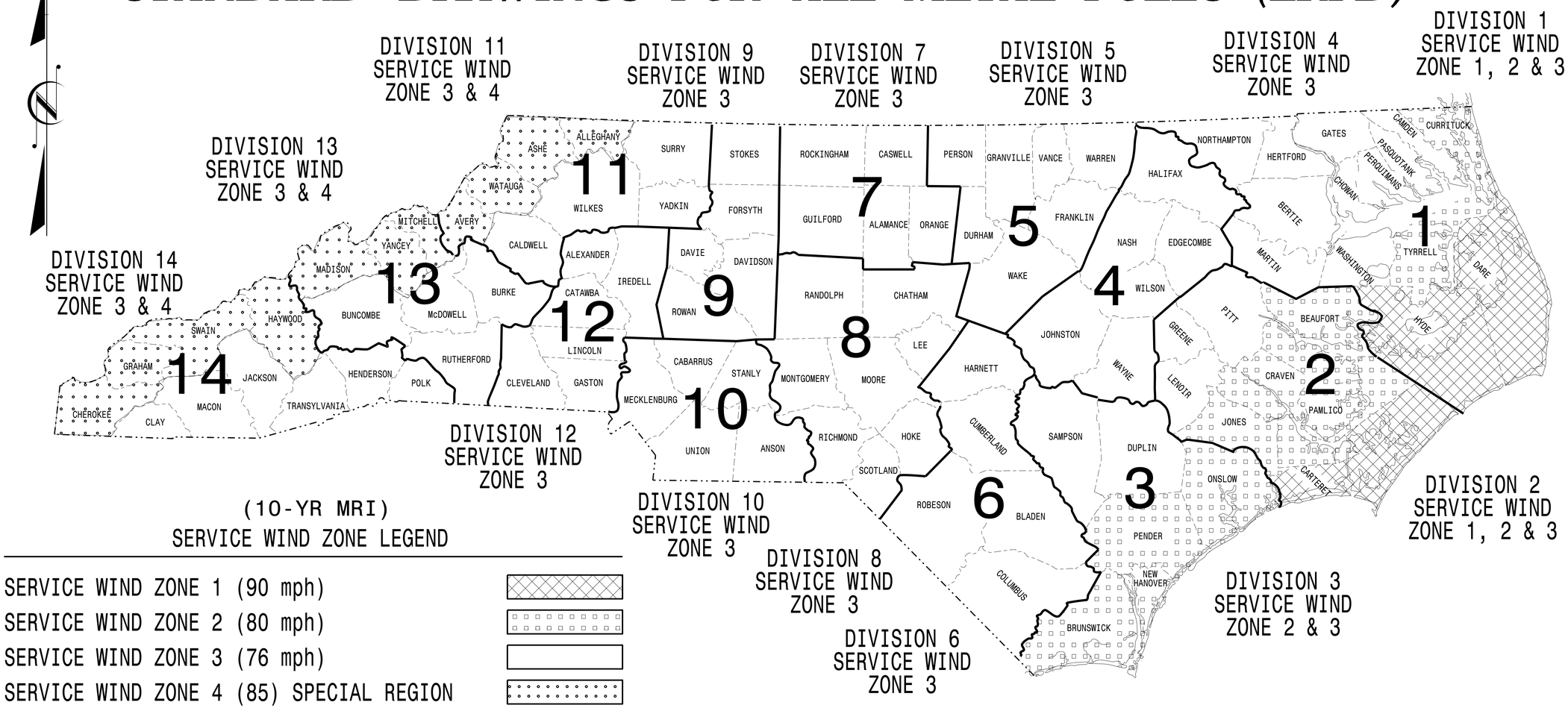

(10-YR MRI)
SERVICE WIND ZONE LEGEND

- SERVICE WIND ZONE 1 (90 mph)
- SERVICE WIND ZONE 2 (80 mph)
- SERVICE WIND ZONE 3 (76 mph)
- SERVICE WIND ZONE 4 (85) SPECIAL REGION

https://connect.ncdot.gov/resources/safety/Pages/ITS-Design-Resources.aspx

Prepared in the Offices of:

Transportation Mobility and Safety Division
Signal Design Section
750 N.Greenfield Pkwy,
Garner,NC 27529

Designed in conformance with the latest 2020 Interim to the 1st Edition 2015

AASHTO LRFD

Standard Specifications for Highway Signs, Luminaires, and Traffic Signals

INDEX OF PLANS

DRAWING NUMBER	DESCRIPTION
Sig. M 1A	Statewide Wind Zone Map (700–yr MRI)
Sig. M 1B	Statewide Wind Zone Map (10–yr MRI)
Sig. M 2	Typical Fabrication Details–All Metal Poles
Sig. M 3	Typical Fabrication Details–Strain Poles
Sig. M 4	Typical Fabrication Details–Mast Arm Poles
Sig. M 5	Typical Fabrication Details–Mast Arm Connection
Sig. M 6	Typical Fabrication Details–Strain Pole Attachments
Sig. M 7	Construction Details–Foundations
Sig. M 8	Standard Strain Pole Foundation–All Soil Conditions
Sig. M 9	Typical Fabrication Details–CCTV Camera Poles

NCDOT CONTACTS:

MOBILITY AND SAFETY DIVISION – TRANSPORTATION SYSTEMS MANAGEMENT AND OPERATIONS UNIT

D.Y. ISHAK – STATE SIGNALS ENGINEER

K. DURIGON, P.E. – ITS AND SIGNALS STRUCTURAL ENGINEER

B. WALKER, P.E. – ITS AND SIGNALS STRUCTURAL ENGINEER

SEAL

NORTH CAROLINA PROFESSIONAL SEAL 036626 ENGINEER KEVIN C. DURIGON

DocuSigned by:
Kevin Durigon
SIGNATURE
4B23DC79B3784DA...
09/21/2023
DATE

03-OCT-2023 12:21
S:\TSG\413 Signals\Design Section\Structures\Drawings\2024 Metal Pole Std Drawings for LRFD\2024 Sig. M1B Standard All Metal Pole (10-yr MRI).dgn
kcdurigon

Docusign Envelope ID: 81F9EE35-EDEE-469B-9DFF-68C947E76F48

PROJECT I.D. NO.	SHEET NO.
U-5906	Sig.M2

Fabrication Details – All Metal Poles

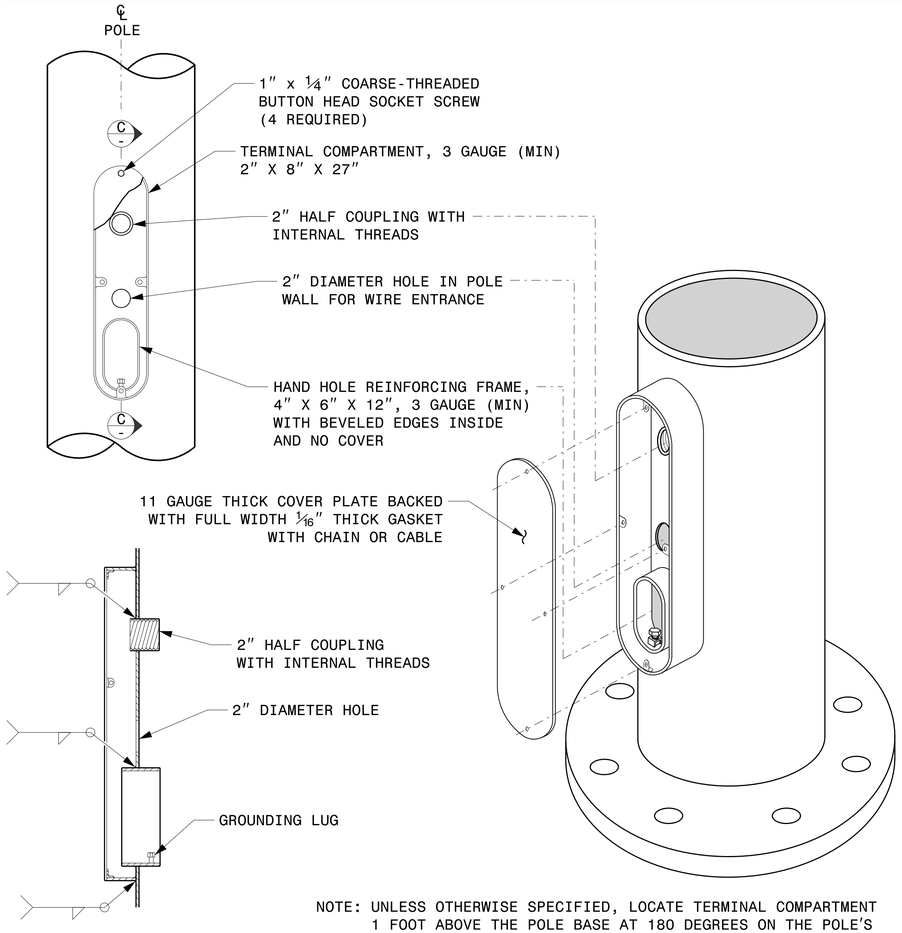

SECTION C-C

NOTE: UNLESS OTHERWISE SPECIFIED, LOCATE TERMINAL COMPARTMENT 1 FOOT ABOVE THE POLE BASE AT 180 DEGREES ON THE POLE'S RADIAL INDEX.

TERMINAL COMPARTMENT DETAIL

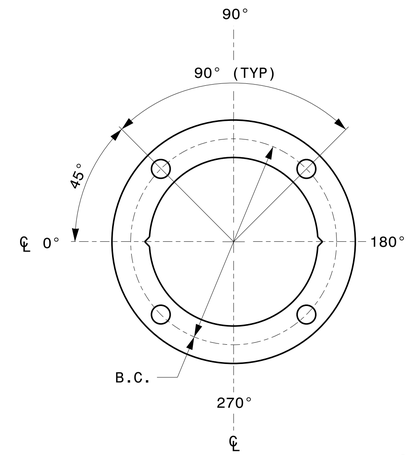

4 BOLT PATTERN

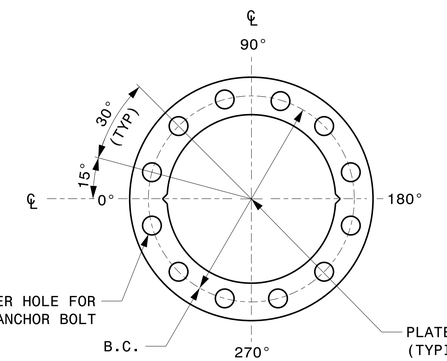

12 BOLT PATTERN

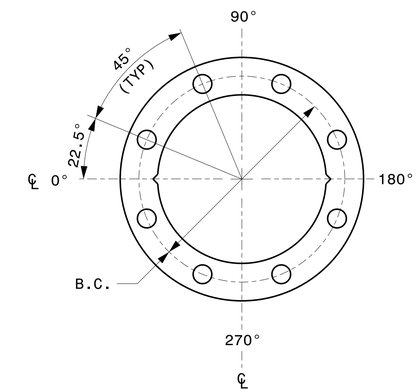

8 BOLT PATTERN

CONSTRUCT TEMPLATES AND PLATES FROM ¼″ (MIN) THICK STEEL. GALVANIZING IS NOT REQUIRED.

BASE PLATE TEMPLATE AND ANCHOR BOLT LOCK PLATE DETAILS

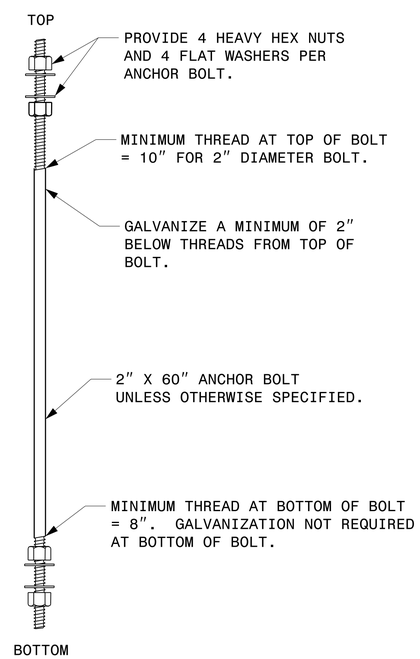

ANCHOR BOLT DETAIL

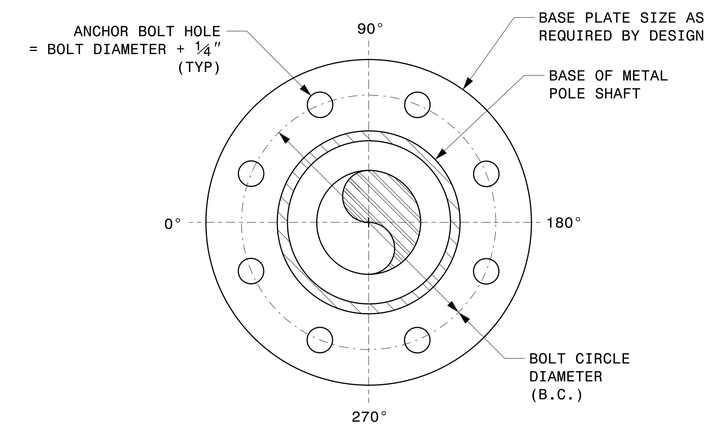

NOTE: BASE PLATE MAY BE CIRCULAR, OCTAGONAL, SQUARE OR RECTANGULAR IN SHAPE.

TYPICAL BASE PLATE DETAIL

MFG _____ MFG. DATE: MM/YY
SHAFT D/T/L/Y ----/----/----/----
ARM-A D/T/L/Y ----/----/----/----
----/----/----/----
ARM-B D/T/L/Y ----/----/----/----
----/----/----/----
A.B. DIA./B.C./L/Y ----/----/----/----
NCDOT SIG. INV. NO. _____
NCDOT POLE NO. _____

SHAFT I.D. TAG
(PROVIDE ON SHAFT OF STRAIN POLES AND MAST ARM POLE SHAFT)

MFG _____ MFG. DATE: MM/YY
SECTION D/T/L/Y ----/----/----/----
NCDOT SIG. INV. NO. _____
NCDOT POLE NO. _____

ARM I.D. TAG
(PROVIDE ON EACH SECTION OF A MULTI-SECTION MAST ARM)

NOTES:

1. D = DIAMETER, T = THICKNESS, L = LENGTH, Y = YIELD STRENGTH
2. A.B. = ANCHOR BOLT
3. B.C. = BOLT CIRCLE OF ANCHOR BOLTS
4. IF STANDARD DESIGN, INCLUDE CASE NUMBER IN ADDITION TO POLE NUMBER ON "NCDOT POLE NO." LINE.
5. SIGNAL INV. NUMBER AND POLE I.D. NUMBER. SEE DRAWING M3 AND M4 FOR MOUNTING POSITIONS OF I.D. TAGS.

IDENTIFICATION TAG DETAILS

Prepared in the Offices of:
Transportation Mobility and Safety Division
STATE OF NORTH CAROLINA DEPARTMENT OF TRANSPORTATION
Signal Design Section
750 N.Greenfield Pkwy,Garner,NC 27529

SCALE 0 NA NONE

Typical Fabrication Details For All Metal Poles

PLAN DATE: SEPTEMBER 2023	DESIGNED BY: C.F.ANDREWS
PREPARED BY: K.C. DURIGON	REVIEWED BY: D.C. SARKAR

REVISIONS	INIT.	DATE

SEAL
NORTH CAROLINA PROFESSIONAL SEAL 036626 ENGINEER KEVIN C. DURIGON

DocuSigned by:
Kevin Durigon
SIGNATURE
4B23DC79B3784DA...
09/21/2023
DATE

03-OCT-2023 12:24
S:*UTILS&SUP*TS Signals*Signal Design Section*Structures*Drawings*2024 Metal Pole Std Drawings for LRFD*2024 Sig-M2 Std. Fabrication Details-All Poles.dgn
kcdurigon

Docusign Envelope ID: 81F9EE35-EDEE-469B-9DFF-68C947E76F48

PROJECT I.D. NO.	SHEET NO.
U-5906	Sig.M3

Fabrication Details – Strain Poles

NOTE:

1. OPENING IN POLE BASE PLATE SHALL BE EQUAL TO POLE BASE INSIDE DIAMETER MINUS 3½" BUT SHALL NOT BE LESS THAN 8½".

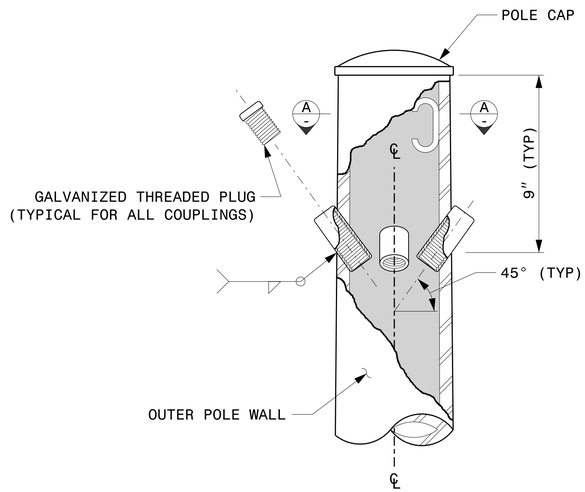

CABLE ENTRANCES AT TOP OF POLE

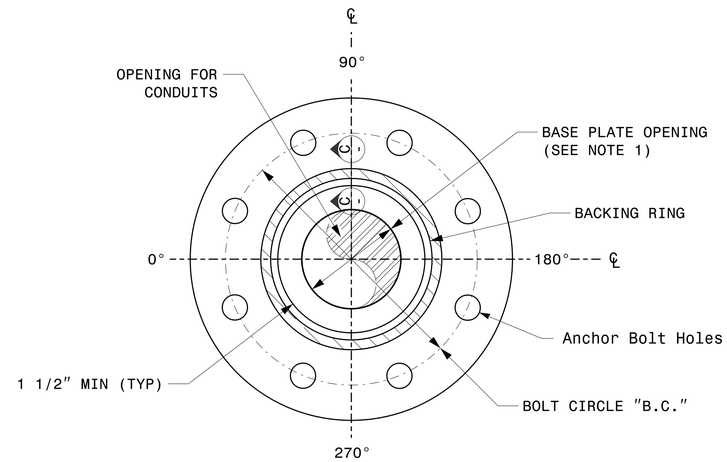

SECTION B-B

POLE BASE PLATE DETAILS
(8 AND 12 BOLT PATTERN)

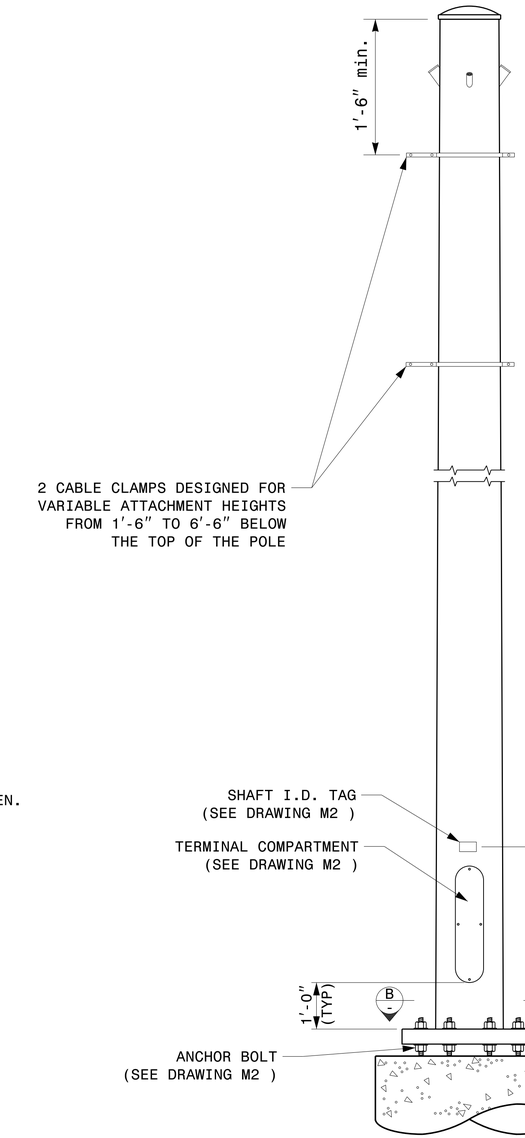

MONOTUBE STRAIN POLE

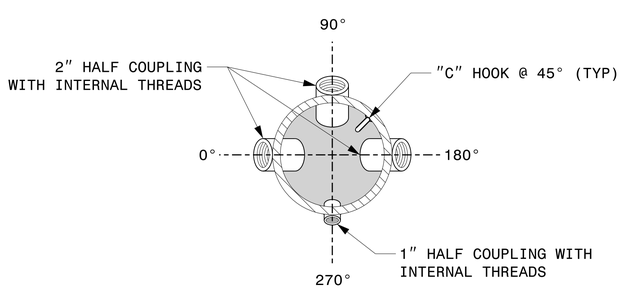

SECTION A-A

RADIAL ORIENTATION OF FACTORY INSTALLED ACCESSORIES AT TOP OF POLE

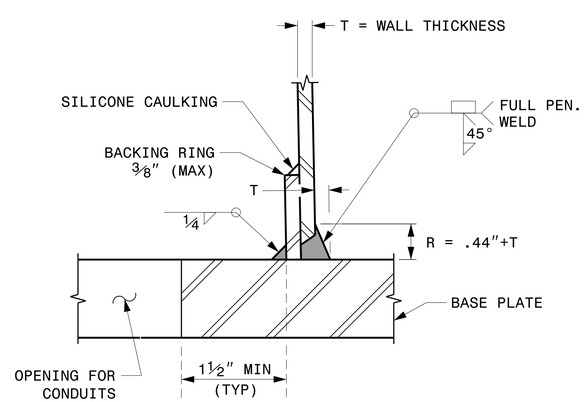

SECTION C-C

(POLE ATTACHMENT TO BASE PLATE)

FULL-PENETRATION GROOVE WELD DETAIL

Prepared in the Offices of:
Transportation Mobility and Safety Division
Signal Design Section
750 N.Greenfield Pkwy,Garner,NC 27529

SCALE
0 NA
NONE

Typical Fabrication Details
For
Strain Poles

PLAN DATE:	SEPTEMBER 2023	DESIGNED BY:	K.C. DURIGON
PREPARED BY:	K.C. DURIGON	REVIEWED BY:	D.C. SARKAR

REVISIONS	INIT.	DATE

SEAL
NORTH CAROLINA PROFESSIONAL SEAL 036626 ENGINEER KEVIN C. DURIGON

DocuSigned by:
Kevin Durigon
SIGNATURE
4B23DC79B3784DA...
09/21/2023
DATE

03-OCT-2023 12:31
S:*ITSSUM\ITS Signals\Signal Design Sections\Structures\Drawings\2024 Metal Pole Std Drawings for LRFD\2024 Sig.M3 Std. Fabrication Details-Strain Poles.dgn
kcdurigon

Docusign Envelope ID: 81F9EE35-EDEE-469B-9DFF-68C947E76F48

PROJECT I.D. NO.	SHEET NO.
U-5906	Sig.M4

Fabrication Details – Mast Arm Poles

NOTE:

1. OPENING IN POLE BASE PLATE SHALL BE EQUAL TO POLE BASE INSIDE DIAMETER MINUS 3½" BUT SHALL NOT BE LESS THAN 8½".

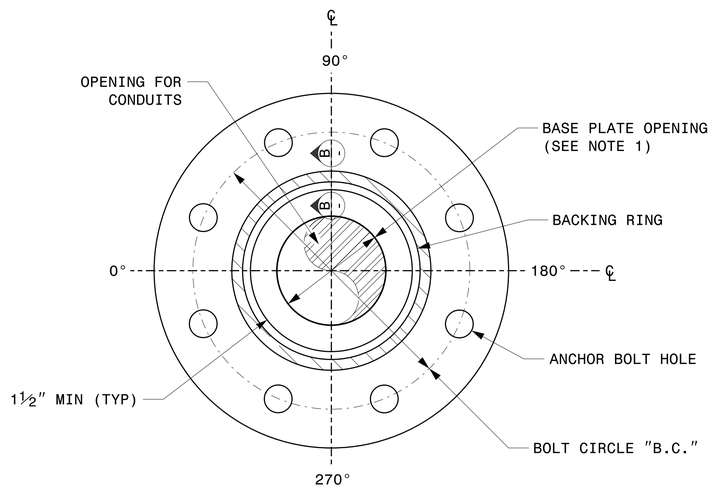

SECTION A-A
POLE BASE PLATE DETAILS

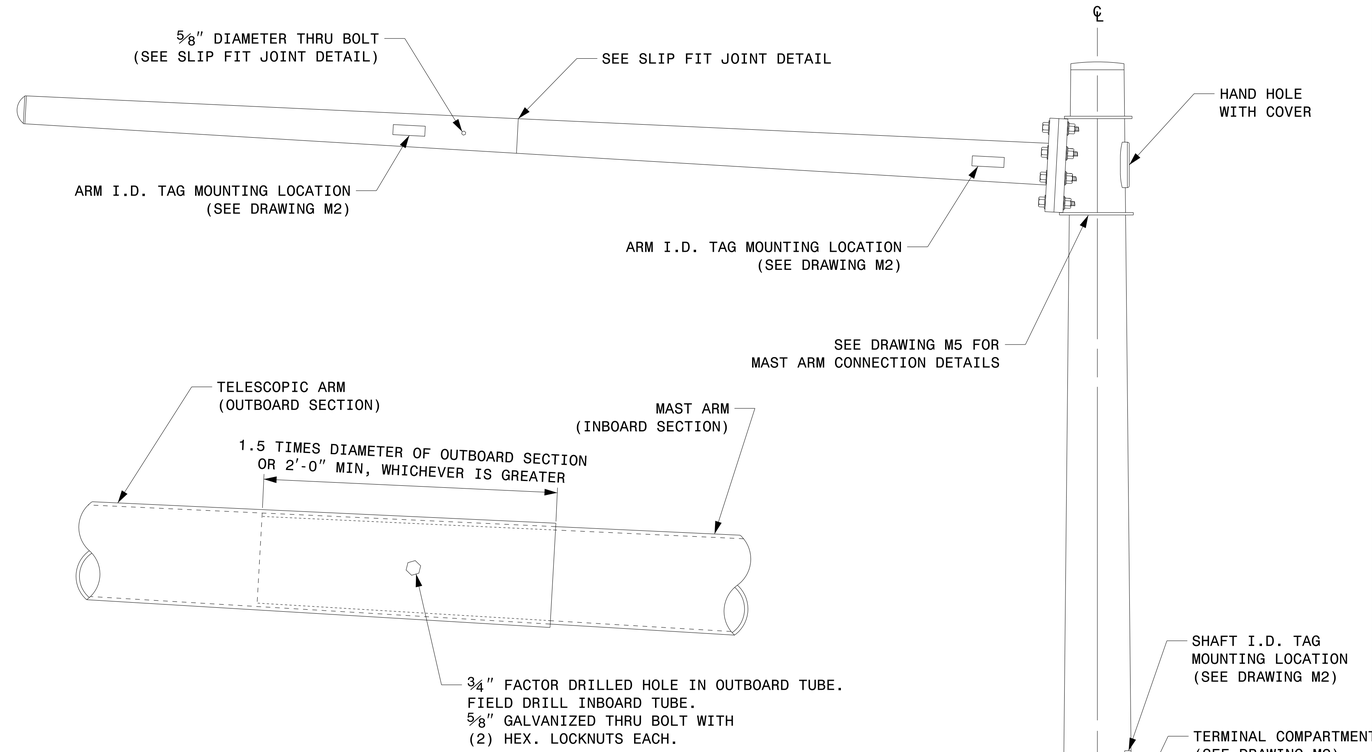

SLIP FIT JOINT DETAIL FOR MAST ARM

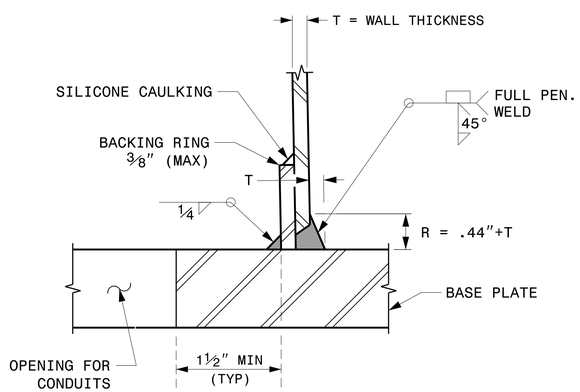

SECTION B-B
(POLE ATTACHMENT TO BASE PLATE)

FULL-PENETRATION GROOVE WELD DETAIL

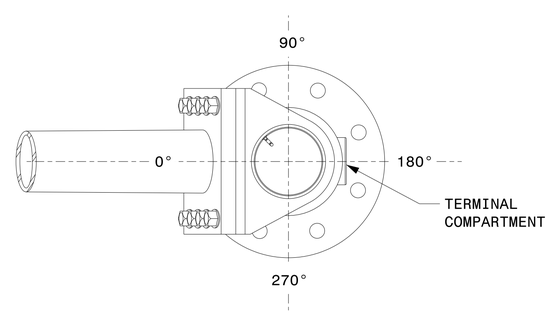

MAST ARM RADIAL ORIENTATION

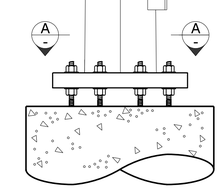

MAST ARM POLE

Prepared in the Offices of:
Transportation Mobility and Safety Division
Signal Design Section
750 N.Greenfield Pkwy,Garner,NC 27529

SCALE 0 NA
NONE

Typical Fabrication Details For Mast Arm Poles

PLAN DATE:	SEPTEMBER 2023	DESIGNED BY:	K.C. DURIGON
PREPARED BY:	K.C. DURIGON	REVIEWED BY:	D.C. SARKAR

REVISIONS	INIT.	DATE

SEAL
NORTH CAROLINA PROFESSIONAL SEAL 036626 ENGINEER KEVIN C. DURIGON

DocuSigned by:
Kevin Durigon
SIGNATURE
4B23DC79B3784DA...
09/21/2023
DATE

03-OCT-2023 12:25
S:\TIS\SIGNALS\Signal Design Section\Structures\Drawings\2024 Metal Pole Std Drawings for LRFD\2024 Sig.M4 Std. Fabrication Details-Mast Arm Poles.dgn
kcdurigon

Docusign Envelope ID: 81F9EE35-EDEE-469B-9DFF-68C947E76F48

WELDED RING STIFFENED MAST ARM CONNECTION

PROJECT I.D. NO.	SHEET NO.
U-5906	Sig.M5

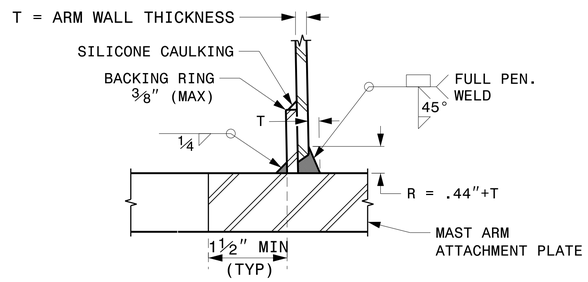

SECTION B-B
FULL-PENETRATION GROOVE WELD DETAIL

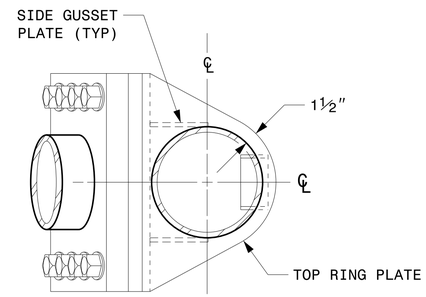

PLAN VIEW

NOTES:

1. PROVIDE A PERMANENT MEANS OF IDENTIFICATION ABOVE THE MAST ARM TO INDICATE PROPER ATTACHMENT ORIENTATION OF THE MAST ARM.
2. DESIGNER WILL DETERMINE THE SIZE OF ALL STRUCTURAL COMPONENTS, PLATES, FASTENERS, AND WELDS SHOWN UNLESS THEY ARE ALREADY SPECIFIED.
3. FABRICATOR IS RESPONSIBLE FOR PROVIDING APPROPRIATE HOLES AT DRAINAGE POINTS TO DRAIN GALVANIZING MATERIALS.
4. FOR MINIMUM EDGE DISTANCE AND NOMINAL BOLT HOLE SIZE, FOLLOW THE LATEST AISC STEEL CONSTRUCTION MANUAL.
5. PROVIDE UPPER HANDHOLE AS NECESSARY WHEN SHAFT EXTENSIONS ARE REQUIRED FOR LUMINAIRE ARMS OR CAMERA. FOR POLES WITHOUT LUMINAIRES/CAMERA, WIRING CAN BE DONE THROUGH THE TOP OF POLE.
6. ALLOWABLE RANGE OF FLANGE TILT ANGLE WILL VARY FROM 0° TO AS REQUIRED.

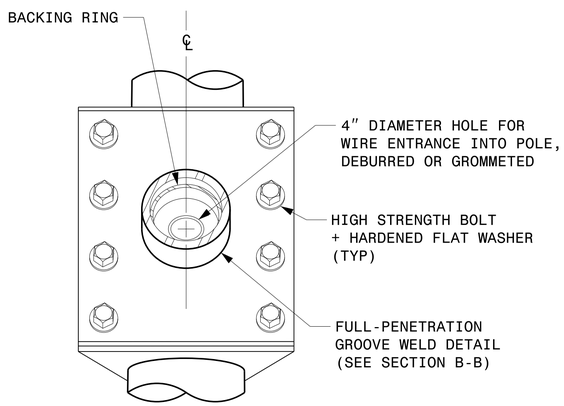

FRONT ELEVATION VIEW

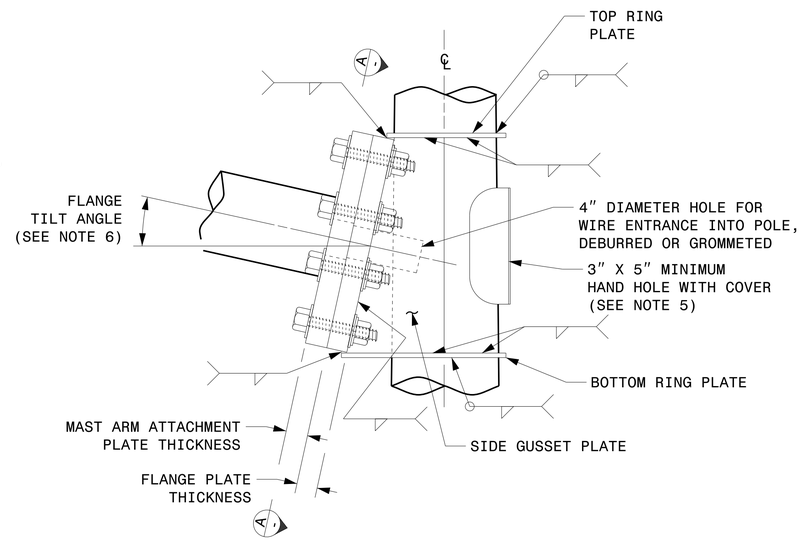

SIDE ELEVATION VIEW

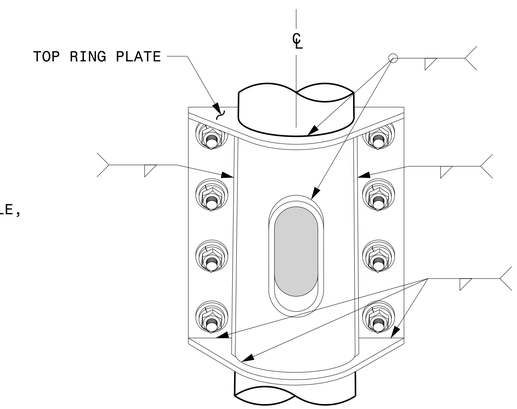

BACK ELEVATION VIEW

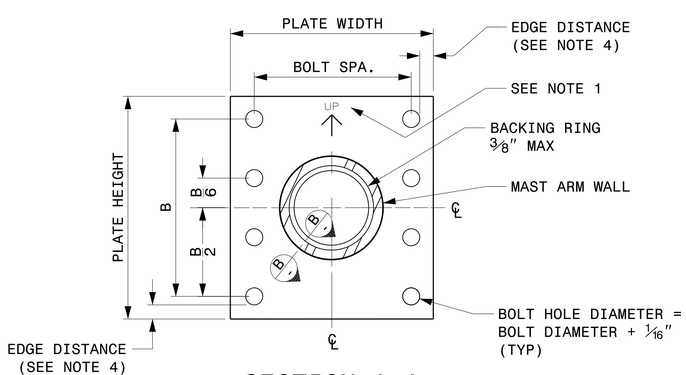

SECTION A-A
MAST ARM ATTACHMENT PLATE

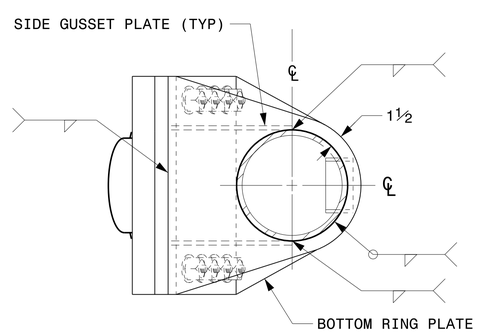

BOTTOM VIEW

Fabrication Details – Mast Arm Connection

Prepared in the Offices of:
Transportation Mobility and Safety Division
Signal Design Section
750 N.Greenfield Pkwy,Garner,NC 27529

SCALE 0 NA
NONE

Typical Fabrication Details
For
Mast Arm Connection To Pole

PLAN DATE:	SEPTEMBER 2023	DESIGNED BY:	C.F. ANDREWS
PREPARED BY:	K.C. DURIGON	REVIEWED BY:	D.C. SARKAR

REVISIONS	INIT.	DATE

SEAL
NORTH CAROLINA PROFESSIONAL SEAL 036626 ENGINEER KEVIN C. DURIGON

DocuSigned by:
Kevin Durigon
4B23DC79B3784DA...
SIGNATURE
09/21/2023
DATE

03-OCT-2023 12:38
S:*ITS\SIGNALS\Signal Design Section\Structures\Drawings\2024 Metal Pole Std Drawings for LRFD\2024 Sig.M5 Std. Connection Fabrication Details-Mast Arm Poles.dgn
kcdurigon

Docusign Envelope ID: 81F9EE35-EDEE-469B-9DFF-68C947E76F48

PROJECT I.D. NO.	SHEET NO.
U-5906	Sig.M6

Fabrication Details – Strain Pole Attachments

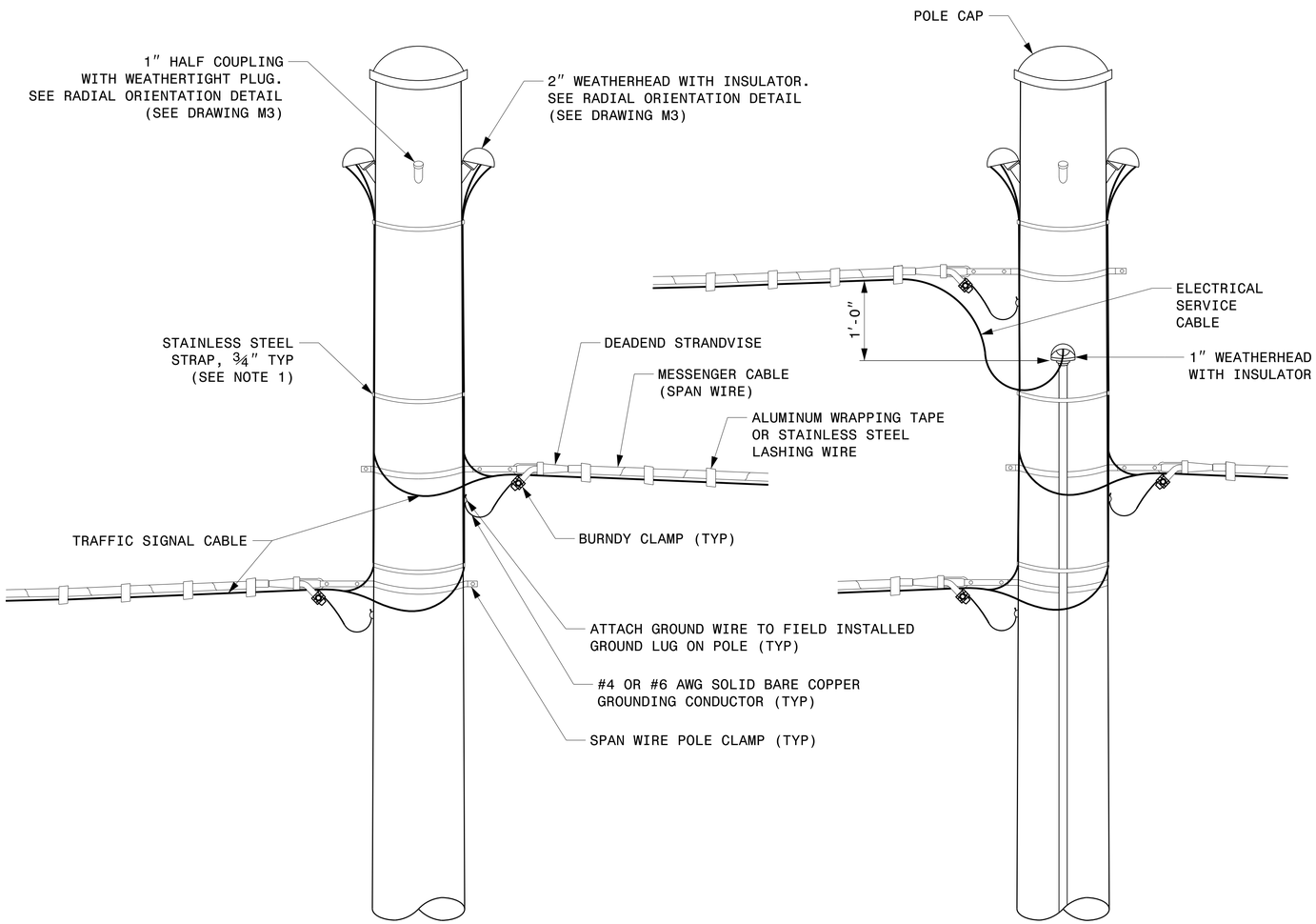

STRAIN POLE ATTACHMENTS

NOTES:

1. STRAP ALL SIGNAL CABLES TO THE SIDE OF THE POLE WITH ¾″ STAINLESS STEEL STRAPS WHEN THE DISTANCE BETWEEN SPAN WIRE ATTACHMENT CLAMP AND WEATHERHEADS EXCEEDS 3′-0″.
2. PROVIDE MINIMUM TWO SPAN WIRE POLE CLAMPS PER POLE.
3. IT IS PROHIBITED TO ATTACH TWO SPAN WIRES AT ONE POLE CLAMP.
4. FOR GENERAL REQUIREMENTS, REFER TO NCDOT STANDARD SPECIFICATIONS FOR ROADWAY AND STRUCTURES, JANUARY 2024.

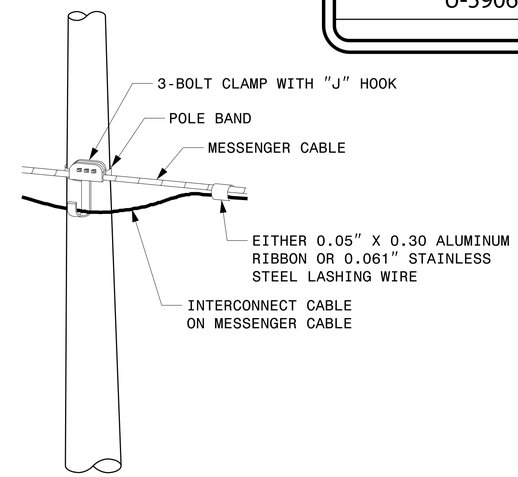

ATTACHMENT OF CABLE TO INTERMEDIATE METAL POLE

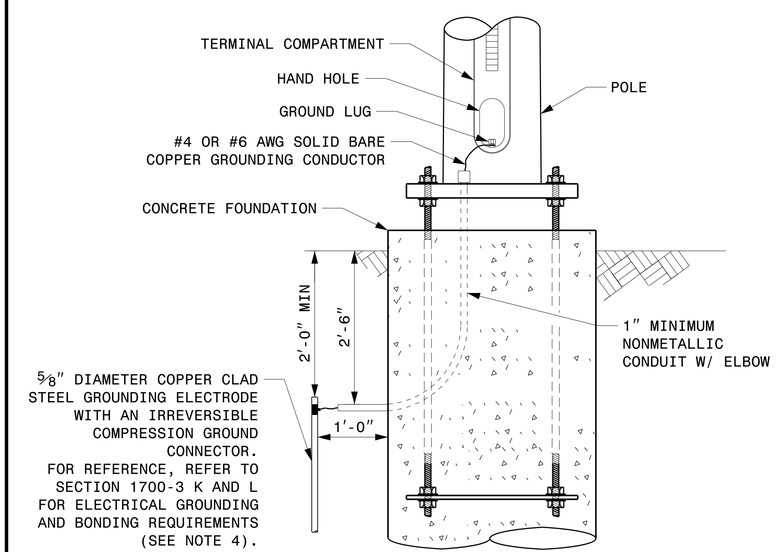

METAL POLE GROUNDING DETAIL FOR STRAIN POLE AND MAST ARM

Prepared in the Offices of:
Transportation Mobility and Safety Division
Signal Design Section
750 N.Greenfield Pkwy,Garner,NC 27529

SCALE
0 NA
NONE

Typical Fabrication Details
For
Strain Pole Attachments

PLAN DATE:	SEPTEMBER 2023	DESIGNED BY:	C.F. ANDREWS
PREPARED BY:	K.C. DURIGON	REVIEWED BY:	D.C. SARKAR

REVISIONS	INIT.	DATE

SEAL
NORTH CAROLINA PROFESSIONAL SEAL 036626 ENGINEER KEVIN C. DURIGON

DocuSigned by:
Kevin Durigon
4B23DC79B3784DA...
SIGNATURE
09/21/2023
DATE

03-OCT-2023 12:41
S:\TIMS\U-5906\TIS\Signals\Signal Design Section\Structures\Drawings\2024 Metal Pole Std Drawings for LRFD\2024 Sig.M6 Std. Fabrication Details-Strain Poles.dgn
kcdurigon

Docusign Envelope ID: 81F9EE35-EDEE-469B-9DFF-68C947E76F48

PROJECT I.D. NO.	SHEET NO.
U-5906	Sig.M7

Construction Details – Foundations

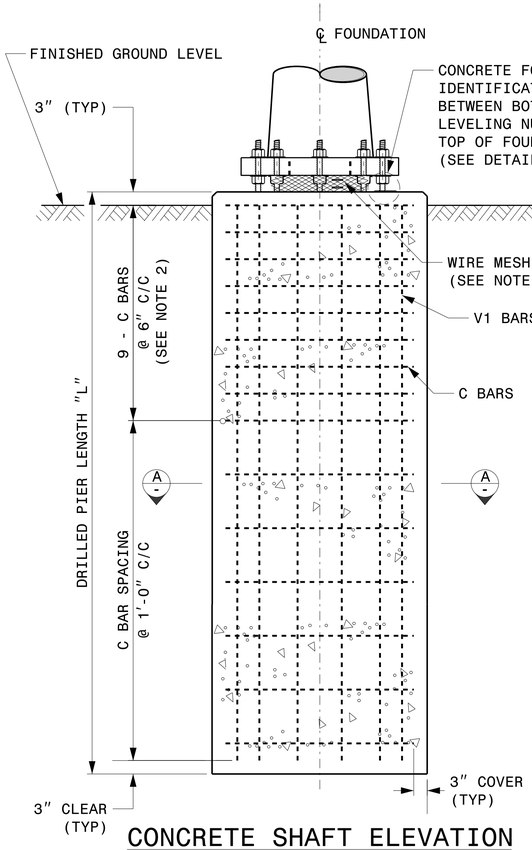

CONCRETE SHAFT ELEVATION

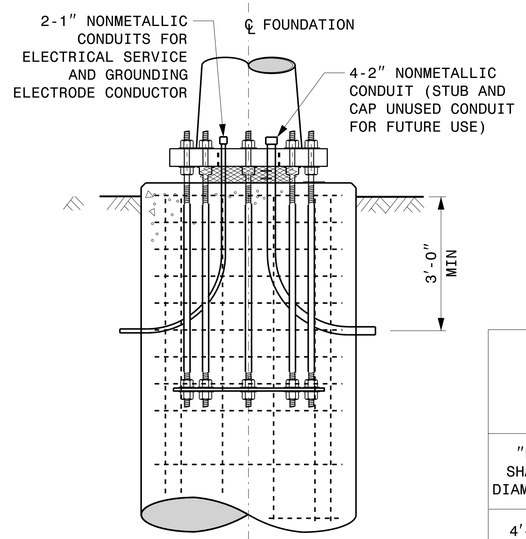

TYPICAL FOUNDATION CONDUIT DETAILS

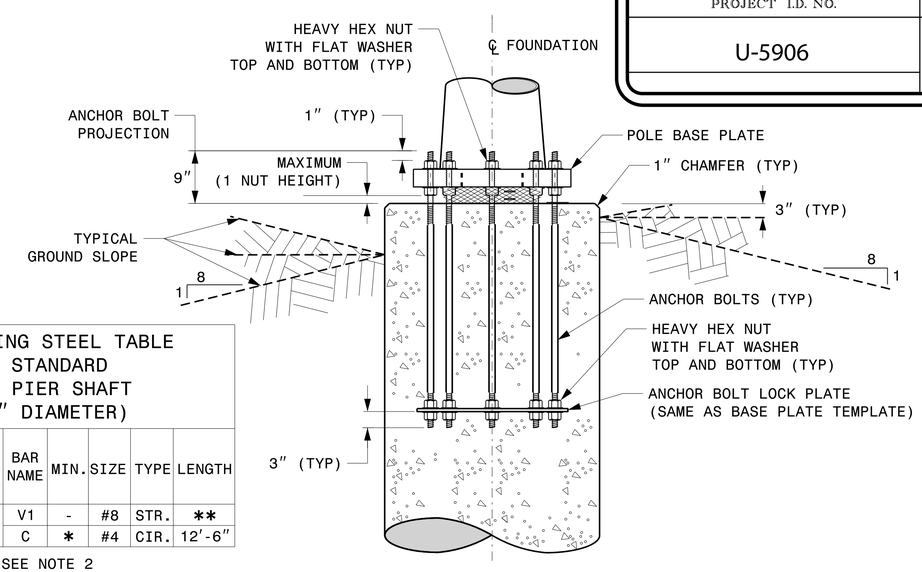

TYPICAL FOUNDATION ANCHOR BOLT DETAILS

(REINFORCING CAGE NOT SHOWN FOR CLARITY)

REINFORCING STEEL TABLE FOR STANDARD DRILL PIER SHAFT (4′-0″ DIAMETER)

"D" SHAFT DIAMETER	CONCRETE VOLUME (CU. YDS)	BAR NAME	MIN.	SIZE	TYPE	LENGTH
4′-0″	.465 X L	V1	-	#8	STR.	**
		C	*	#4	CIR.	12′-6″

* SEE NOTE 2
** SEE NOTE 3

GENERAL NOTES:

1. IF ACTUAL SUBSURFACE CONDITIONS DIFFER SIGNIFICANTLY FROM BORING DATA, CONTACT THE ENGINEER BEFORE EXCAVATING OR PLACING CONCRETE.
2. CIRCULAR TIE REINFORCING RINGS MAY BE VERTICALLY ADJUSTED BY +/-3″ AT A DEPTH BETWEEN 2′-0″ AND 3′-0″ TO FACILITATE THE INSTALLATION OF ELECTRICAL CONDUIT ENTERING IN THE CAGE.
3. FOR STANDARD FOUNDATIONS, SEE SHEET SIG. M8 FOR DETAILS. VERTICAL REINFORCING BARS (V1) MAY BE HORIZONTALLY ADJUSTED BY +/-3″ TO FACILITATE THE INSTALLATION OF ELECTRICAL CONDUIT ENTERING INTO THE CAGE.
4. PROVIDE 2″ TO 5″ FOUNDATION PROJECTION ABOVE GROUND LEVEL, DEPENDING ON THE GROUND SLOPE.
5. UNLESS OTHERWISE SHOWN, FOUNDATION DESIGNS ARE BASED ON NON-SLOPING LEVEL GROUND SURFACES WITH SLOPE RATIOS OF 8:1 (H:V) OR FLATTER. IF ACTUAL GROUND LINE SLOPES ARE STEEPER, CONTACT THE ENGINEER BEFORE EXCAVATING OR PLACING CONCRETE.
6. CONSTRUCT FOUNDATIONS IN ACCORDANCE WITH NCDOT STANDARD PROVISIONS SP09 R005- FOUNDATIONS AND ANCHOR ROD ASSEMBLIES FOR METAL POLES. ALL APPLICABLE 2024 NCDOT STANDARD SPECIFICATIONS ARE REFERENCED IN THIS PROVISION. REFER TO THE NCDOT RESOURCES/SPECIFICATIONS PAGE LOCATED ON THE CONNECT NCDOT WEBSITE.

   https://connect.ncdot.gov/resources/Specifications and Special Provisions.aspx
7. USE AIR ENTRAINED AA CONCRETE MIX WITH A COMPRESSION STRENGTH OF f′c=4500 psi (MIN) AFTER 28 DAYS.
8. USE ASTM A615 GRADE 60 DEFORMED BARS FOR ALL REINFORCING STEEL. MAINTAIN AT LEAST 3″ COVER ON ALL REINFORCEMENT.
9. LOCATE IDENTIFICATION TAG ON TOP OF THE FOUNDATION, DIRECTLY ABOVE THE CONDUIT'S ENTRY POINT.
10. PROVIDE TWO LAYERS OF 4 MESH GALVANIZED WELDED 23 GAUGE (0.025) 6″ WIDE AROUND PIPES UNDER THE BASE PLATE AND SECURE IT WITH TIES IF NECESSARY.
11. PREFERRED LOCATION FOR THE I.D. TAG IS AS SHOWN IN DETAIL-A: DIRECTLY ABOVE THE CONDUIT ENTERING THE FOUNDATION.

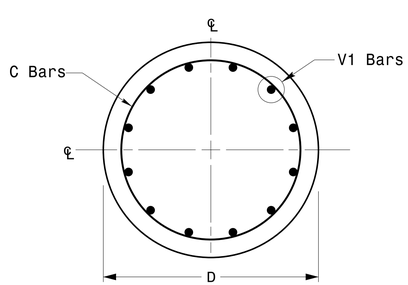

SECTION A-A

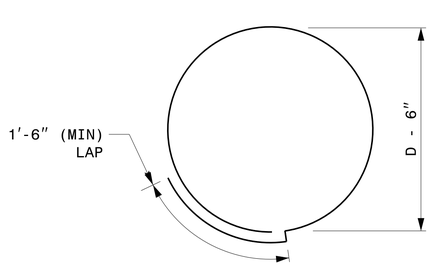

TYPICAL "C" BAR DETAIL

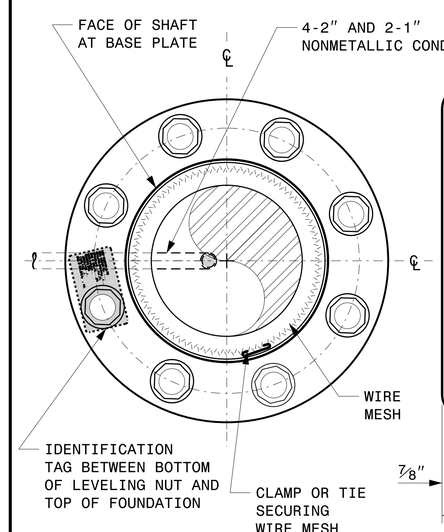

D = DIAMETER
L = LENGTH / DEPTH
mm = MONTH
yy = YEAR

DETAIL-A

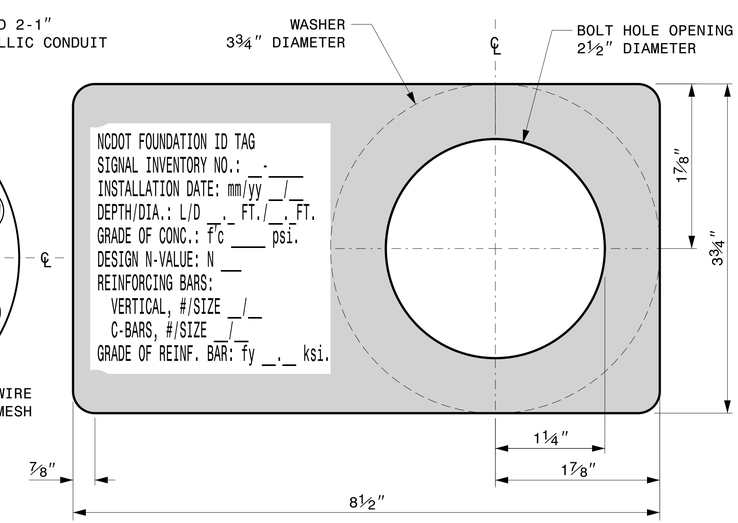

CONCRETE FOUNDATION IDENTIFICATION TAG DETAILS

Prepared in the Offices of:
Transportation Mobility and Safety Division
Signal Design Section
750 N.Greenfield Pkwy,Garner,NC 27529

SCALE: 0 NA — NONE

Construction Details For Foundations

PLAN DATE: SEPTEMBER 2023	DESIGNED BY: K.C. DURIGON
PREPARED BY: K.C. DURIGON	REVIEWED BY: D.C. SARKAR

REVISIONS	INIT.	DATE

SEAL
NORTH CAROLINA PROFESSIONAL SEAL 036626 ENGINEER KEVIN C. DURIGON

DocuSigned by: Kevin Durigon — SIGNATURE — 09/21/2023 DATE
4B23DC79B3784DA...

03-OCT-2023 12:45
S:*TSSGU*TS IT Signals*Signal Design Section*Structures*Drawings*2024 Metal Pole Std Drawings for LRFD*2024 Sig.M7 Std. Construction Details-Strain Poles.dgn
kcdurigon

Docusign Envelope ID: 81F9EE35-EDEE-469B-9DFF-68C947E76F48

PROJECT I.D. NO.	SHEET NO.
U-5906	Sig.M8

SOIL CONDITION

STANDARD STRAIN POLES						STANDARD FOUNDATIONS 48″ Diameter Drilled Pier Length (L) – Feet							Reinforcement			
			Reactions at the Pole Base			Clay				Sand			Longitudinal		Stirrups	
Case No.	Pole Height (Ft.)	Base Plate BC (In.)	Axial (kip)	Shear (kip)	Moment (ft–kip)	Medium N–Value 4–8	Stiff N–Value 9–15	Very Stiff N–Value 16–30	Hard N–Value >30	Loose N–Value 4–10	Medium N–Value 11–30	Dense N–Value >30	Bar Size (#)	Quantity (ea.)	Bar Size (#)	Spacing (in.)
S26L1	26	22	2	9	210	19.5	12.5	9	6.5	15.5	14.5	13	8	12	4	12
S26L2	26	23	2	10	240	19.5	12	9	6.5	15.5	14.5	13	8	12	4	12
S26L3	26	25	2	11	260	20.5	12	10	8	16	15	13	8	12	4	12
S30L1	30	22	2	9	230	19	11	9	7	15.5	14	12.5	8	12	4	12
S30L2	30	23	2	10	270	20	12	10	8	16	14.5	13	8	12	4	12
S30L3	30	25	2	11	290	21	12	10	8	17	15	13.5	8	12	4	12
S30H1	30	25	3	13	355	23	13	11	9	18	16.5	14.5	8	12	4	12
S30H2	30	29	3	15	405	25	14	11	9	19	17.5	15.5	8	14	4	12
S30H3	30	29	3	16	430	26	15	12	9	20	18	16	8	14	4	6
S35L1	35	22	3	8	260	19.5	12	10	8	15.5	14.5	13	8	12	4	12
S35L2	35	23	3	10	300	21	12	10	8	16.5	15	13.5	8	12	4	12
S35L3	35	25	3	10	320	21.5	13	10	8	17	15.5	14	8	12	4	12
S35H1	35	25	3	12	390	23.5	14	11	9	18	17	15	8	14	4	12
S35H2	35	29	4	14	460	26	15	12	9	20	18	16	8	14	4	6
S35H3	35	29	4	16	495	28.5	15	13.5	10	21.5	19	17	8	14	4	6

48″ DIAMETER FOUNDATION CONCRETE VOLUME (CUBIC YARDS) = (0.465) x DRILLED PIER LENGTH

GENERAL NOTES:

1. VALUES SHOWN IN THE "REACTIONS AT THE POLE BASE" COLUMN REPRESENT THE MINIMUM ACCEPTABLE CAPACITY ALLOWED FOR DESIGN USING A COMBINED FORCE RATIO (CFR) OF 1.00.
2. USE CHAIRS AND SPACERS TO MAINTAIN PROPER CLEARANCE.
3. FOR FOUNDATION, ALWAYS USE AIR-ENTRAINED CONCRETE MIX.

FOUNDATION SELECTION:

1. PERFORM A STANDARD PENETRATION TEST AT EACH PROPOSED FOUNDATION SITE TO DETERMINE "N" VALUE.
2. SELECT THE APPROPRIATE WIND ZONE FROM M1 DRAWING.
3. SELECT THE SOIL TYPE (CLAY OR SAND) THAT BEST DESCRIBES THE SOIL CHARACTERISTICS.
4. GET THE APPROPRIATE STANDARD POLE CASE NUMBER FROM THE PLANS OR FROM THE ENGINEER.
5. SELECT THE APPROPRIATE COLUMN UNDER "STANDARD FOUNDATIONS" BASED ON SOIL TYPE AND "N" VALUE. SELECT THE APPROPRIATE ROW BASED ON THE POLE LOAD CASE.
6. THE FOUNDATION DEPTH IS THE VALUE SHOWN IN THE "STANDARD FOUNDATIONS" CATEGORY WHERE THE COLUMN AND THE ROW INTERSECT.
7. USE CONSTRUCTION PROCEDURES AND DESIGN METHODS PRESCRIBED BY FHWA-NHI-10-016 MANUAL FOR DRILLED SHAFTS.

Standard Strain Pole Foundation – All Soil Conditions

Prepared in the Offices of:
Transportation Mobility and Safety Division
Signal Design Section
750 N.Greenfield Pkwy,Garner,NC 27529

SCALE 0 NA
NONE

Standard Strain Pole Foundation for All Soil Conditions

PLAN DATE:	SEPTEMBER 2023	DESIGNED BY:	K.C. DURIGON
PREPARED BY:	K.C. DURIGON	REVIEWED BY:	D.C. SARKAR

REVISIONS	INIT.	DATE

SEAL
NORTH CAROLINA PROFESSIONAL SEAL 036626 ENGINEER KEVIN C. DURIGON

DocuSigned by:
Kevin Durigon
4B23DC79B3784DA...
SIGNATURE
09/21/2023
DATE

03-OCT-2023 12:48
S:\TTSSGN\TTS Signals\Signal Design Section\Structures\Drawings\2024 Metal Pole Std Drawings for LRFD\2024 Sig.M8 Std. Strain Pole Found.-Saturated Soil Condition.dgn
kcdurigon

Docusign Envelope ID: 81F9EE35-EDEE-469B-9DFF-68C947E76F48

PROJECT I.D. NO.	SHEET NO.
U-5906	Sig.M9

Fabrication Details – CCTV Camera Poles

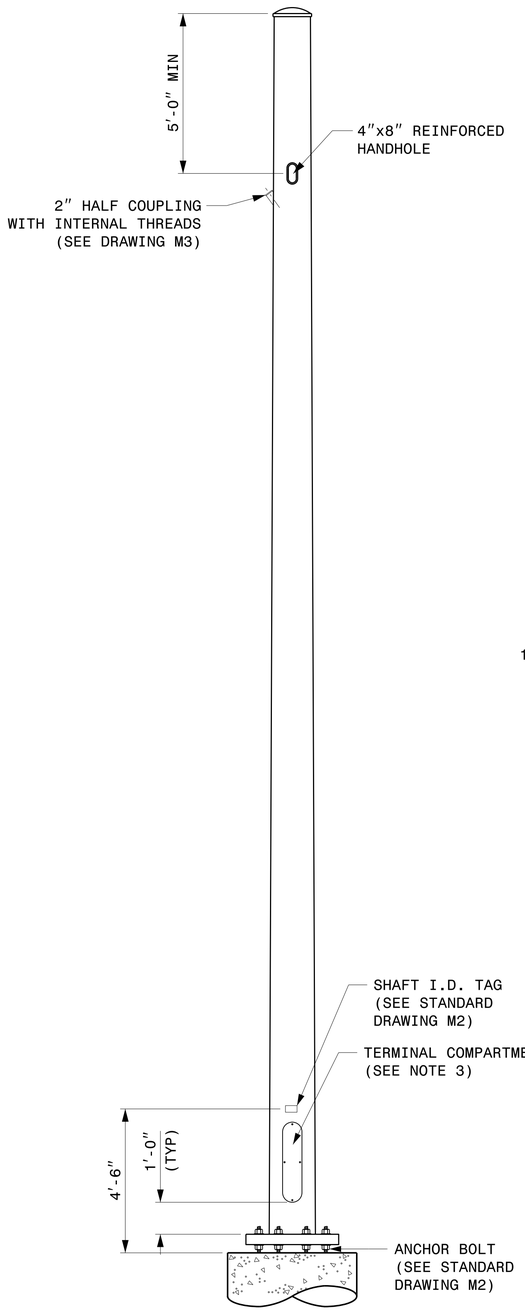

CCTV CAMERA POLE

(NOT TO SCALE)

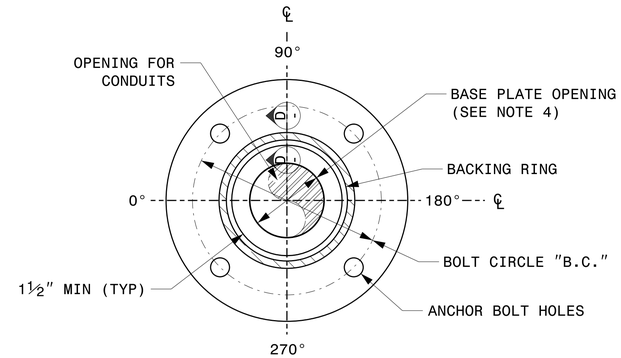

4 BOLT PATTERN
FOR POLES UP TO 40'

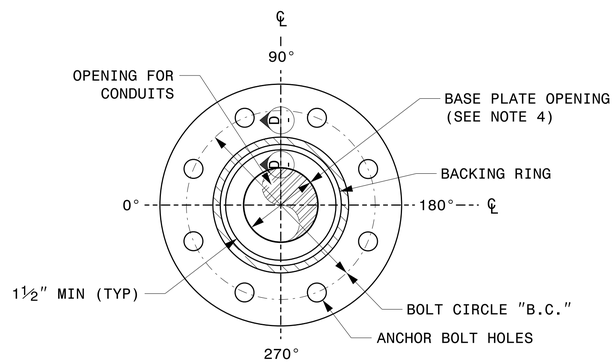

8 BOLT PATTERN
FOR POLES TALLER THAN 40'

BASE PLATE DETAILS

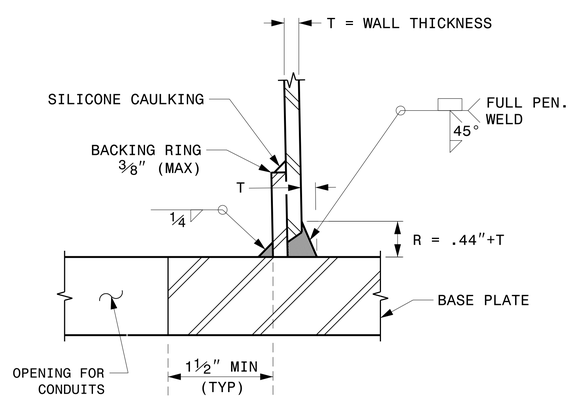

SECTION D-D

(POLE ATTACHMENT TO BASE PLATE)

FULL-PENETRATION GROOVE WELD DETAIL

NOTES:

1. THIS DRAWING PROVIDES BASIC DETAILS FOR CCTV POLES. PROJECT REQUIREMENTS MAY REQUIRE SPECIAL FACTORY PREPS THAT ARE NOT SHOWN ON THESE DETAILS.
2. DETAILS FOR INTERNAL CAMERA LOWERING SYSTEMS ARE NOT SHOWN.
3. POLE MOUNTED CABINETS MAY REQUIRE MODIFICATIONS TO THE LOWER HANDHOLE OPENING TO MOUNT CABINETS. 4" X 8" REINFORCED HANDHOLES ARE ACCEPTABLE OPTIONS, AND MAY BE PREFERRED.
4. OPENING IN POLE BASE SHALL BE EQUAL TO POLE BASE INSIDE DIAMETER MINUS 3½" BUT SHALL NOT BE LESS THAN 8½".
5. USE COMPACT SECTION CRITERIA D/T RATIO PER AASHTO LTS-LRFD 1ST EDITION SECTION 5.7.2.

Prepared in the Offices of:
Transportation Mobility and Safety Division
Signal Design Section
750 N.Greenfield Pkwy,Garner,NC 27529

SCALE 0 NA
NONE

Typical Fabrication Details
For
CCTV Poles

PLAN DATE:	SEPTEMBER 2023	DESIGNED BY:	K.C. DURIGON
PREPARED BY:	K.C. DURIGON	REVIEWED BY:	C.F. ANDREWS

REVISIONS	INIT.	DATE

SEAL
NORTH CAROLINA PROFESSIONAL SEAL 036626 ENGINEER KEVIN C. DURIGON

DocuSigned by:
Kevin Durigon
SIGNATURE
4B23DC79B3784DA...
09/21/2023
DATE

03-OCT-2023 12:51
S:*ITS\SGU\ITS\Signals\Signal Design Section\Structures\Drawings*2024 Metal Pole Std Drawings for LRFD*2024 Sig.M9 Fabrication Details - CCTV Poles.dgn
kcdurigon

Docusign Envelope ID: 81F9EE35-EDEE-469B-9DFF-68C947E76F48

PROJECT REFERENCE NO.	SHEET NO.
U-5906	RRFB

Two to Four Lanes, Undivided

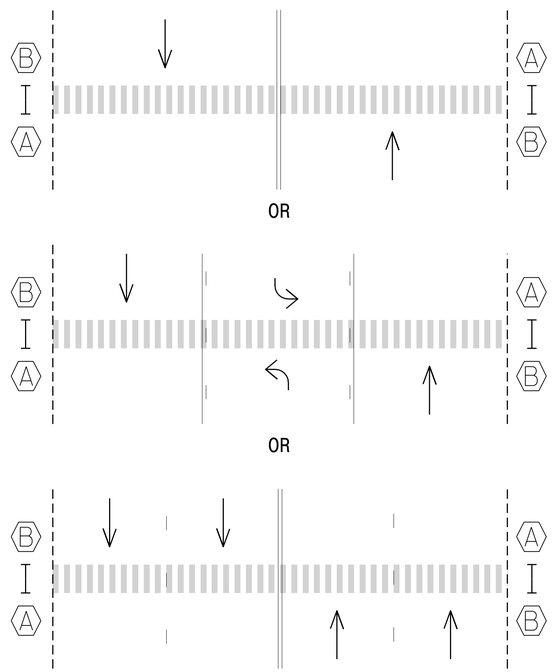

RRFB Sign Detail

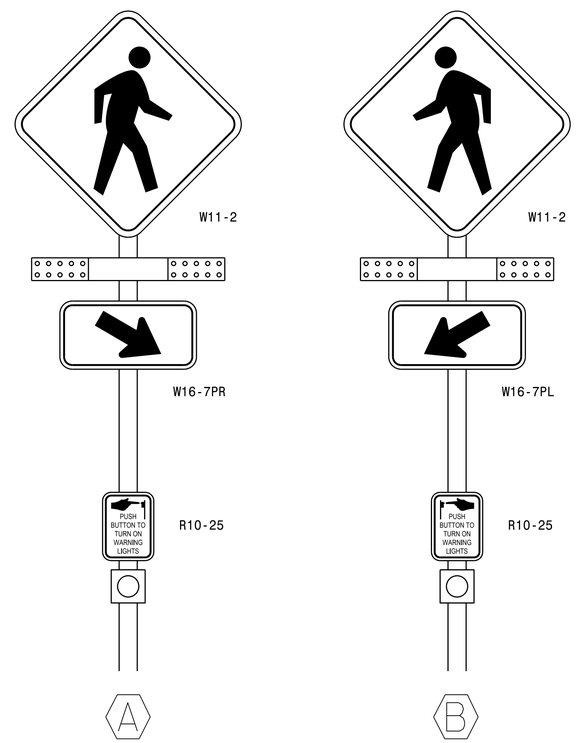

Two or Multi-Lanes, Divided

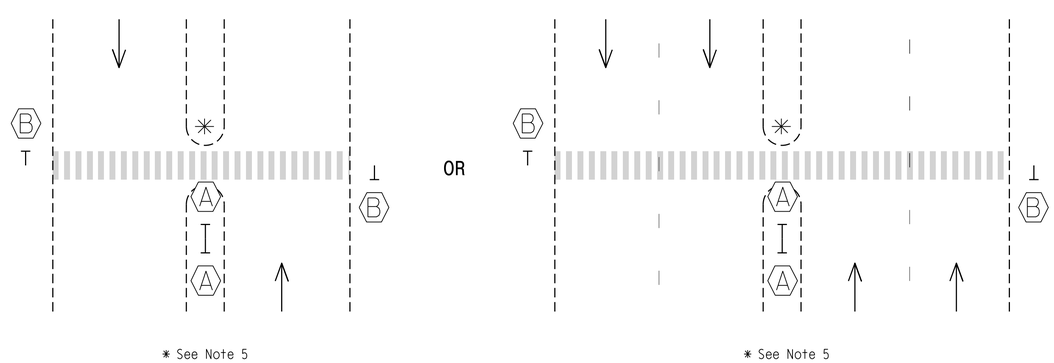

Notes

1. Design the RRFB in accordance with the 2023 MUTCD, 11th Edition, Chapter 4L: Rectangular Rapid-Flashing Beacons. The RRFB unit associated with a post-mounted sign and plaque should be located between the pedestrian crossing warning (W11-2) sign and the supplemental downward diagonal arrow plaque (W16-7p).
2. If needed, a supplemental RRFB with an "AHEAD" (W16-9P) or distance (W16-2P) plaque may be installed on the approach in advance of the crosswalk. The addtional RRFB shall be a supplemental to and not a replacement for the RRFB at the actual crosswalk.
3. When practical, the RRFB and mounting post on the right side of the road shall be mounted on the approach side of the crosswalk closest to approaching traffic.
4. When practical, the RRFB and mounting post on the left side of the road may be mounted on the back of the post for the opposing approach.
5. A RRFB on the left side of the roadway or in the median may be individually mounted on the approach side of the crosswalk closest to approaching traffic, or, when practical, may be mounted back to back on the same post and mounted on either side of the crosswalk in the median.
6. Locate push button sign (R10-25) and push button to face crosswalk, even if it is mounted on the back side of the sign.
7. All RRFB units associated with a given crosswalk (including those with an advance crossing sign) shall, when actuated, simultaneously commence operation of their rapid-flashing indications and shall cease operation simultaneously.
8. For quantitative purposes, a single sided, post mounted RRFB is one assembly unit. A double sided RRFB mounted on the same post is counted as two (2) assemblies.
9. For additional information, see Version 24 of the Transportation Systems Management and Operations (TSMO) Unit Project Special Provisions (PSP).

Timing of RRFBs

When actuated, the two yellow indications in each RRFB unit shall flash in a rapidly flashing sequence.

The RRFB shall flashing sequence shall provide enough time for pedestrians to cross from curb to curb. It is recommened to be a minimum of 7 seconds plus the crossing distance (D) divided by 3.5 feet/per sec., rounded up to the next whole second:

$$\text{Flash Time (sec.)} = 7 + D/3.5$$

Per Section 4L.03 of the 2023 MUTCD, RRFBs shall provide 75 flashing sequences per minute. During each 800 millisecond flashing sequence, the left and right RRFB indications shall operate using the following sequence:

- The RRFB indication on the left-hand side shall be illuminated for approximately 50 milliseconds. Both RRFB indications shall be dark for approximately 50 milliseconds.
- The RRFB indication on the right-hand side shall be illuminated for approximately 50 milliseconds. Both RRFB indications shall be dark for approximately 50 milliseconds.
- The RRFB indication on the left-hand side shall be illuminated for approximately 50 milliseconds. Both RRFB indications shall be dark for approximately 50 milliseconds.
- The RRFB indication on the right-hand side shall be illuminated for approximately 50 milliseconds. Both RRFB indications shall be dark for approximately 50 milliseconds.
- Both RRFB indications shall be illuminated for approximately 50 milliseconds. Both RRFB indications shall be dark for approximately 50 milliseconds.
- Both RRFB indications shall be illuminated for approximately 50 milliseconds. Both RRFB indications shall be dark for approximately 250 milliseconds.

DOCUMENT NOT CONSIDERED FINAL UNLESS ALL SIGNATURES COMPLETED

Prepared in the Offices of:
Transportation Mobility and Safety Division
STATE OF NORTH CAROLINA DEPARTMENT OF TRANSPORTATION
TSMO Unit
750 N. Greenfield Parkway
Garner, NC 27529

SEAL
NORTH CAROLINA PROFESSIONAL SEAL 026486 ENGINEER ROBERT J. ZIEMBA

DocuSigned by: Robert J. Ziemba
SIGNATURE
05/30/2024
DATE

Standard Drawing for Rectangular Rapid Flashing Beacon

30-MAY-2024 16:59
S:\TMS\SMTS\Signals\Signal Design Section\Central Region\Rob's Files\RRFB Stds\rrfb Updated 5-24.dgn
rjziemba

Docusign Envelope ID: 81F9EE35-EDEE-469B-9DFF-68C947E76F48

PROJECT REFERENCE NO.	SHEET NO.
U-5906	SCP-1

LEGEND

- EXISTING FLAT PANEL ANTENNA (SINGLE)
- FLAT PANEL ANTENNA (SINGLE)
- YAGI ANTENNA (SINGLE)
- OMNI ANTENNA
- EXISTING CONTROLLER AND CABINET
- EXISTING GATEWAY RADIO LOCATION
- 10–XXXX SIGNAL INVENTORY NUMBER
- NEW METAL POLE W/MAST ARM
- EXISTING METAL POLE W/MAST ARM
- EXISTING WOOD POLE
- NEW METAL POLE
- SP SIGNAL POLE
- EXISTING METAL POLE
- NEW OVERSIZED JUNCTION BOX
- EXISTING OVERSIZED JUNCTION BOX
- EXISTING CONDUIT
- NEW CONDUIT

CONSTRUCTION NOTE SYMBOLOGY KEY

- XX INDICATES NUMBER OF CABLES, LOOPS, ETC.
- XX INDICATES NUMBER OF FIBERS PER CABLE, TWISTED PAIRS PER CABLE, ETC.
- XX INDICATES NUMBER OF RISER(S)/CONDUIT(S)
- XX INDICATES DIAMETER OF RISER(S)/CONDUIT(S) (INCH)

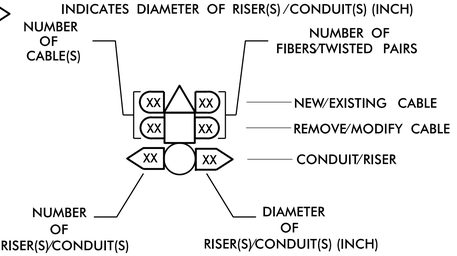

CONSTRUCTION NOTES

- 2 INSTALL ETHERNET CABLE
- 17 INSTALL CABLE(S) IN EXISTING CONDUITS
- 39 INSTALL JUNCTION BOX
- 66 INSTALL MOLDABLE DUCT SEAL

DOCUMENT NOT CONSIDERED FINAL UNLESS ALL SIGNATURES COMPLETED

RS&H
NC FIRM LICENSE No: F-0493
1520 SOUTH BOULEVARD, SUITE 200
CHARLOTTE, NC 28203
(704) 752-0610

Prepared for the Office of:
Transportation Mobility and Safety Division
Intelligent Transportation Systems Section
750 N. Greenfield Pkwy., Garner, NC 27529

D10-18 Cornelius
Wireless Communications Plans

Division 10 Mecklenburg County Cornelius

PLAN DATE:	July 2025	REVIEWED BY:	S.G. Haynie
PREPARED BY:	A.M. Kollar	REVIEWED BY:	

SCALE

REVISIONS	INIT.	DATE

SEAL
NORTH CAROLINA PROFESSIONAL SEAL 029531 ENGINEER STEVEN G. HAYNIE
DocuSign Steve Haynie 7/25/2025
SIGNATURE DATE
CADD Filename: U-5906scp01.dgn

7/16/2025
4:38:13 PM
A:\0049015.U-5906 Torrence Chapel\Design\Traffic\Signals\Plan Sheets\U-5906scp01A_A.dgn

Docusign Envelope ID: 81F9EE35-EDEE-469B-9DFF-68C947E76F48

PROJECT REFERENCE NO.	SHEET NO.
U-5906	SCP-2

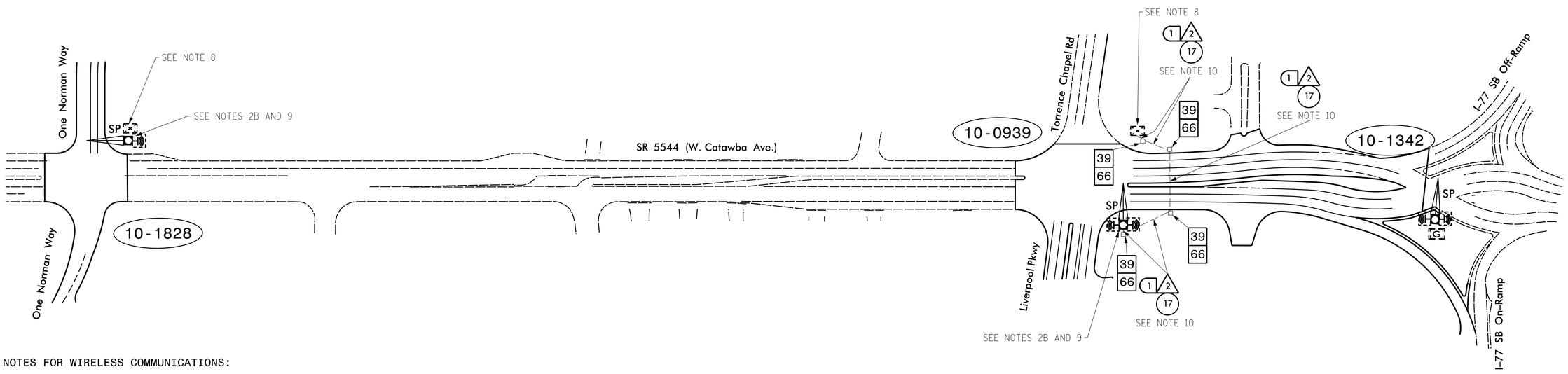

NOTES FOR WIRELESS COMMUNICATIONS:

1. FIVE (5) DAYS PRIOR TO BEGINNING WORK ON THE SIGNAL SYSTEM, CONTACT THE DIVISION 10 DEPUTY DIVISION TRAFFIC ENGINEER, AT (704) 983-4400. NOTIFY THE ENGINEER AFTER ALL WORK IS PERFORMED TO ENSURE THAT ALL WIRELESS CIRCUITS ARE FUNCTIONING PROPERLY. WORK IS NOT COMPLETE UNTIL THE SIGNAL SYSTEM IS BACK UP AND OPERATIONAL.
2. INSTALL ETHERNET CABLE:
   A. ON WOOD POLES REQUIRING A NEW RIGID GALVANIZED STEEL RISER, INSTALL A 2″ RISER WITH WEATHERHEAD
   B. ON METAL POLES WITH MAST ARMS, RUN ETHERNET CABLE UP THROUGH THE POLE AND OUT THE MAST ARM; FIELD DRILL A 1/2″ HOLE UP THROUGH THE BOTTOM OF MAST ARM FOR INSTALLATION OF THE ETHERNET CABLE TO THE ANTENNA.
   C. ON METAL STRAIN POLES, RUN ETHERNET CABLE UP THROUGH THE POLE AND OUT THE WEATHERHEAD AND ROUTE THE ETHERNET CABLE TO THE ANTENNA.
   D. BETWEEN THE POINT OF EXITING THE RISER, METAL POLE OR MAST ARM AND THE ANTENNA, SECURE THE ETHERNET CABLE TO THE STRUCTURE USING 3/4″ STAINLESS STEEL STRAPS EVERY 12″.
3. IF AN EXISTING 2″ SPARE RIGID GALVANIZED STEEL RISER IS AVAILABLE, INSTALL THE ETHERNET CABLE IN THE SPARE RISER WITH 2″ WEATHERHEAD.
4. INSTALL WIRELESS ANTENNA ON POLE WITH RF WARNING SIGN. (NOTE: RF WARNING SIGN NOT REQUIRED WHEN ANTENNA IS INSTALLED ON AN NCDOT-OWNED POLE.)
5. MAINTAIN PROPER CLEARANCE FROM ALL UTILITIES PER THE NATIONAL ELECTRICAL SAFETY CODE.
6. INSTALL WIRELESS RADIO MODEM WITH EXTERIOR DISCONNECT SWITCH LOCATED ON CABINET. (NOTE: RF ANTENNA DISCONNECT SWITCH AND DECAL ARE NOT REQUIRED WHEN THE ANTENNA IS INSTALLED ON AN NCDOT-OWNED POLE.)
7. REFERENCE "WIRELESS RADIO ANTENNA TYPICAL DETAILS."
8. REUSE AND INSTALL ETHERNET EDGE SWITCHES, BROADBAND RADIOS, ANTENNAS, CABLES, AND ALL OTHER WIRELESS EQUIPMENT FROM EXISTING TRAFFIC SIGNALS.
9. RELOCATE AND REATTACH ANTENNA ON THE VERTICAL SHAFT MEMBER AT THE PREVIOUS ATTACHMENT HEIGHT. FIELD ADJUST AS NECESSARY TO ENSURE FULLY FUNCTIONING COMMUNICATIONS.
10. INSTALL NEW STANDARD SIZE JUNCTION BOXES WITH EXISTING SPARE CONDUIT RUNNING THROUGH NEW JUNCTION BOXES. INSTALL ETHERNET CABLE IN NEW JUNCTION BOXES AND EXISTING CONDUIT.
11. AFTER REINSTALLING THE EXISTING RADIO EQUIPMENT, ENSURE COMMUNICATIONS WITH SYSTEM D10-18 CORNELIUS.

RS&H
NC FIRM LICENSE No: F-0493
1520 SOUTH BOULEVARD, SUITE 200
CHARLOTTE, NC 28203
(704) 752-0610

DOCUMENT NOT CONSIDERED FINAL UNLESS ALL SIGNATURES COMPLETED

Prepared for the Office of:
Transportation Mobility and Safety Division
NORTH CAROLINA DEPARTMENT OF TRANSPORTATION
Intelligent Transportation Systems Section
750 N. Greenfield Pkwy., Garner, NC 27529

D10-18 Cornelius Wireless Communications Plans

Division 10 Mecklenburg County Cornelius

PLAN DATE:	July 2025	REVIEWED BY:	S.G. Haynie
PREPARED BY:	A.M. Kollar	REVIEWED BY:	----------

SCALE: 0 — NTS

REVISIONS	INIT.	DATE

SEAL
NORTH CAROLINA PROFESSIONAL SEAL 029531 ENGINEER STEVEN G. HAYNIE
DocuSigned by: Steve Haynie 7/25/2025
SIGNATURE DATE

CADD Filename: U-5906scp02.dgn

PLOT DATE: 9/9/2025 PLOT TIME: 9:59:25 AM