Docusign Envelope ID: 1ECDE3C7-8F10-4ED0-82E1-988B482028F6

09/08/99

TIP PROJECT: U-5906

CONTRACT: C204505

See Sheet 1A For Index of Sheets
See Sheet 1B For Conventional Symbols

STATE OF NORTH CAROLINA
DIVISION OF HIGHWAYS

STATE	STATE PROJECT REFERENCE NO.	SHEET NO.	TOTAL SHEETS
N.C.	U-5906	1	

STATE PROJ. NO.	F.A. PROJ. NO.	DESCRIPTION
46451.1.1	2195001	PE
46451.2.1	2195001	RW, UTIL.
46451.3.1	2195001	CONST.

MECKLENBURG COUNTY

100% PLANS

LOCATION: INTERSECTION IMPROVEMENTS SR 2195 (TORRENCE CHAPEL ROAD) AND SR 5544 (WEST CATAWBA AVENUE) IN CORNELIUS

TYPE OF WORK: DRAINAGE, GRADING, PAVING, AND SIGNALS

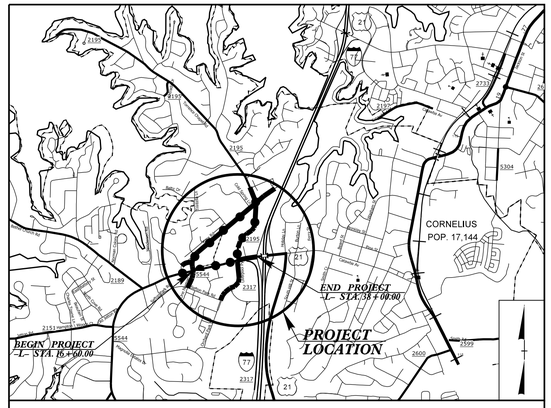

DETOUR

VICINITY MAP N.T.S

NAD 83/ NA 2011

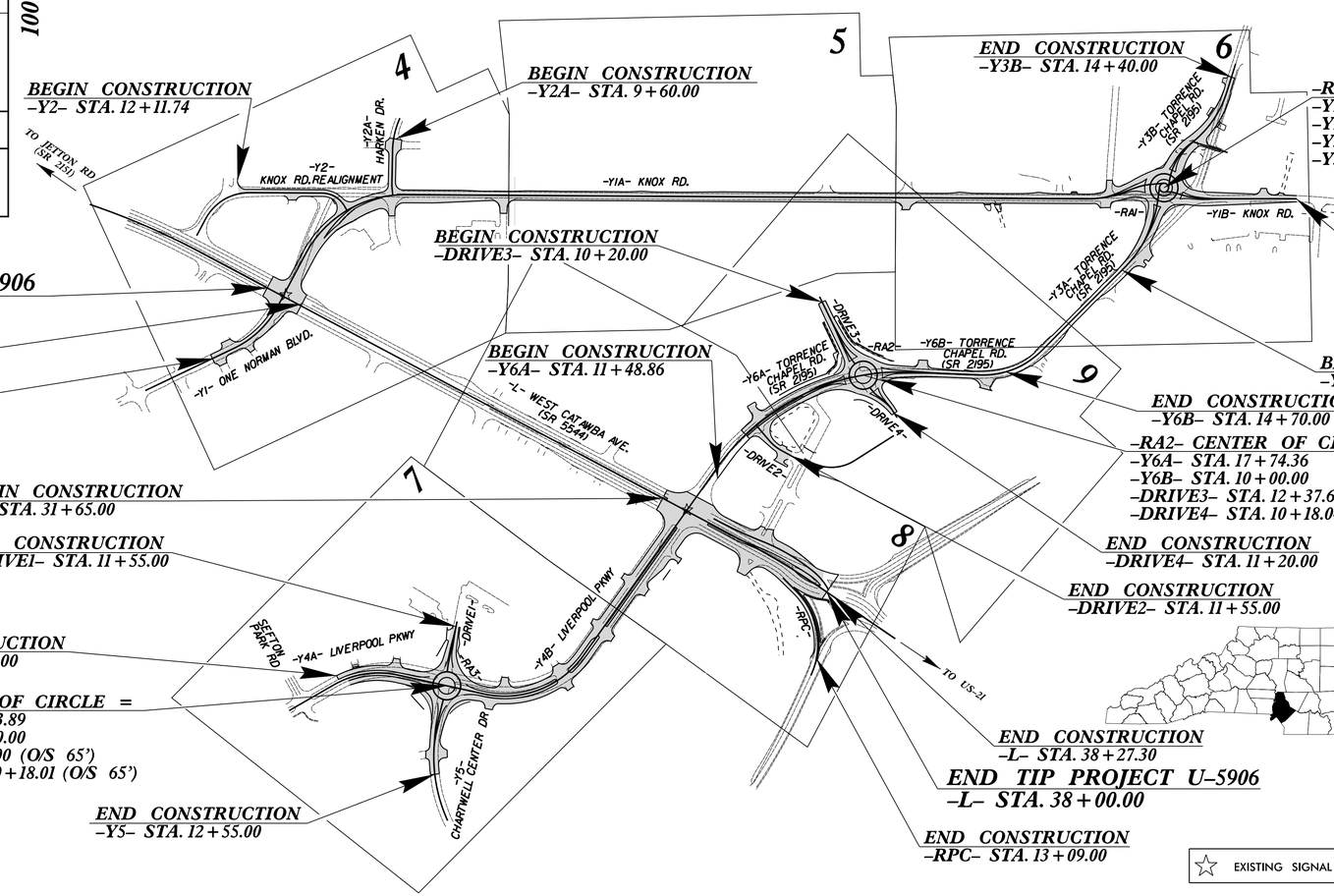

BEGIN CONSTRUCTION
-Y2- STA. 12+11.74

BEGIN CONSTRUCTION
-Y2A- STA. 9+60.00

END CONSTRUCTION
-Y3B- STA. 14+40.00

-RA1- CENTER OF CIRCLE =
-Y1A- STA. 41+08.61 (O/S 15.00')
-Y1B- STA. 10+00.00 (O/S 15.00')
-Y3A- STA. 14+93.25 (O/S 15.00')
-Y3B- STA. 10+00.00 (O/S 15.00')

END CONSTRUCTION
-Y1B- STA. 14+46.00

BEGIN CONSTRUCTION
-DRIVE3- STA. 10+20.00

BEGIN TIP PROJECT U-5906
-L- STA. 16+60.00

END CONSTRUCTION
-L- STA. 17+88.34

BEGIN CONSTRUCTION
-Y1- STA. 12+50.00

BEGIN CONSTRUCTION
-Y6A- STA. 11+48.86

BEGIN CONSTRUCTION
-Y3A- STA. 11+61.63

END CONSTRUCTION
-Y6B- STA. 14+70.00

-RA2- CENTER OF CIRCLE =
-Y6A- STA. 17+74.36
-Y6B- STA. 10+00.00
-DRIVE3- STA. 12+37.63 (O/S 65')
-DRIVE4- STA. 10+18.04 (O/S 65')

BEGIN CONSTRUCTION
-L- STA. 31+65.00

END CONSTRUCTION
-DRIVE1- STA. 11+55.00

END CONSTRUCTION
-DRIVE4- STA. 11+20.00

END CONSTRUCTION
-DRIVE2- STA. 11+55.00

BEGIN CONSTRUCTION
-Y4A- STA. 11+95.00

-RA3- CENTER OF CIRCLE =
-Y4A- STA. 15+63.89
-Y4B- STA. 10+00.00
-Y5- STA. 10+18.00 (O/S 65')
-DRIVE1- STA. 10+18.01 (O/S 65')

END CONSTRUCTION
-Y5- STA. 12+55.00

END CONSTRUCTION
-L- STA. 38+27.30

END TIP PROJECT U-5906
-L- STA. 38+00.00

END CONSTRUCTION
-RPC- STA. 13+09.00

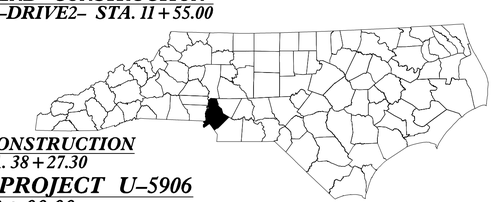

☆ EXISTING SIGNAL

DOCUMENT NOT CONSIDERED FINAL UNLESS ALL SIGNATURES COMPLETED

THIS IS A PARTIAL CONTROL OF ACCESS PROJECT WITH ACCESS BEING LIMITED TO POINTS SHOWN ON THE PLANS.

GRAPHIC SCALES

50 25 0 50 100
PLANS

50 25 0 50 100
PROFILE (HORIZONTAL)

10 5 0 10 20
PROFILE (VERTICAL)

DESIGN DATA

ADT 2025 = 30,250
ADT 2045 = 35,250
K = 10 %
D = 50 %
T = 2 % *
V = 40 MPH
* TTST = 1% DUAL 1%
FUNC CLASS =
MINOR ARTERIAL
REGIONAL TIER

PROJECT LENGTH

LENGTH ROADWAY TIP PROJECT U-5906 = 0.405 MILES

TOTAL LENGTH TIP PROJECT U-5906 = 0.405 MILES

-L- USED TO CALCULATE PROJECT LENGTH

PREPARED IN THE OFFICE OF:
RS&H
1520 SOUTH BOULEVARD, SUITE 200
CHARLOTTE, NC 28203
NC FIRM LICENSE No: F-0493
FOR THE NORTH CAROLINA DEPARTMENT OF TRANSPORTATION

2024 STANDARD SPECIFICATIONS

RIGHT OF WAY DATE:
MAY 28, 2019

LETTING DATE:
NOVEMBER 18, 2025

ALLISON DRAKE, PE
PROJECT ENGINEER

CASSIE ROBINSON, PE
PROJECT DESIGN ENGINEER

RANDY BOWERS
NCDOT CONTACT

HYDRAULICS ENGINEER
DocuSigned by: Alexander R Vinson 9/15/2025
E79C9A47B6942E...
SIGNATURE: P.E.
NORTH CAROLINA PROFESSIONAL SEAL 049764 ENGINEER ALEXANDER R. VINSON

ROADWAY DESIGN ENGINEER
Signed by: Allison C. Drake 9/11/2025
7F8898ACE6B442E...
SIGNATURE: P.E.
NORTH CAROLINA PROFESSIONAL SEAL 042357 ENGINEER ALLISON C. DRAKE

STATE OF NORTH CAROLINA DEPARTMENT OF TRANSPORTATION

15-JUL-2025 13:54
R:\Roadway\Proj\U5906_Rdy_tsh.dgn
Luxenbek

Docusign Envelope ID: 6E9E98D9-1729-4494-8A75-A86F37CA02AD

8/17/99

PROJECT REFERENCE NO.	SHEET NO.
U-5906	1A

ROADWAY DESIGN ENGINEER

NORTH CAROLINA PROFESSIONAL ENGINEER SEAL 042067 ALLISON C. DRAKE

9/18/2025

DOCUMENT NOT CONSIDERED FINAL UNLESS ALL SIGNATURES COMPLETED

RS&H 1520 SOUTH BOULEVARD, SUITE 200
CHARLOTTE, NC 28203
NC FIRM LICENSE No: F-0493

INDEX OF SHEETS

SHEET NUMBER	SHEET
1	TITLE SHEET
1A	INDEX OF SHEETS, GENERAL NOTES, AND STANDARD DRAWINGS
1B	CONVENTIONAL SYMBOLS
2A-1 THRU 2A-11	PAVEMENT SCHEDULE AND TYPICAL SECTIONS
2B-1 THRU 2B-4	ROADWAY DETAIL SHEETS
2B-5	TRUCK APRON AND CURB RAMP DETAILS
2B-6 THRU 2B-8	ROADWAY SHEAR POINT DIAGRAMS
2B-9	TEMPORARY SIDEWALK DETAIL
2B-10	RETAINING WALL DETAIL SHEET
2B-11	TEMPORARY DRIVEWAY DETAIL
2C-1	PROPOSED BIKE/PED SAFETY RAIL
2C-2	GUARDRAIL PLACEMENT AT C&G
2C-3	CONCRETE SIDEWALK
2C-4	CURB RAMP - PARALLEL RAMP
2C-5	CURB RAMP - SHARED LANDING
2C-6	SINGLE LANE URBAN ROUNDABOUT SIGNING W/ PEDESTRIANS
2C-7	TRANSITION 2'- 6" C&G TO 1'- 6" C&G
2C-8	TRANSITION 2'- 6" C&G TO 8" x 12" OR 8" x 18" CURB
2C-9	METHOD OF PIPE INSTALLATION - RIGID PIPE
2C-10	METHOD OF PIPE INSTALLATION - FLEXIBLE PIPE
2C-11	CONVERT EXISTING DI, CB, OTCB, OR GI TO JB
2C-12	CONVERT EXISTING CB OR JB TO DI OR 2-GI
2C-13	MINIMUM DEPTH CATCH BASIN
3B-1	SUMMARY OF EARTHWORK, GUARDRAIL SUMMARY, PAVEMENT REMOVAL SUMMARY, AND BREAKING OF EXISTING ASPHALT SUMMARY
3D-1 THRU 3D-5	SUMMARY OF DRAINAGE QUANTITIES
3G-1	GEOTECHNICAL SUMMARIES
3P-1	PARCEL INDEX SHEET
3P-2	RIGHT OF WAY AREA DATA SHEET
4 THRU 9	PLAN SHEETS
10 THRU 15	PROFILE SHEETS
RW-4 THRU RW-9	RIGHT OF WAY PLAN SHEETS
RW01 THRU RW09	SURVEY CONTROL SHEETS
TMP-1 THRU TMP-20	TRAFFIC MANAGEMENT PLANS
PMP-1 THRU PMP-7	PAVEMENT MARKING PLANS
EC-1 THRU EC-15	EROSION CONTROL PLANS
SIGN-1 THRU SIGN-15	SIGNING PLANS
SIG. 1.0 THRU SCP-2	SIGNAL PLANS
UC-1 THRU UC-14	UTILITY CONSTRUCTION PLANS
UO-1 THRU UO-9	UTILITIES BY OTHERS PLANS
X-1	CROSS SECTION INDEX
X-1A THRU X-1C	CROSS SECTION SUMMARY SHEETS
X-2 THRU X-52	CROSS SECTIONS
W1 THRU W8	RETAINING WALL SHEETS

GENERAL NOTES

GENERAL NOTES: 2024 SPECIFICATIONS
EFFECTIVE: 01-16-2024
REVISED:

GRADING AND SURFACING OR RESURFACING AND WIDENING:

THE GRADE LINES SHOWN DENOTE THE FINISHED ELEVATION OF THE PROPOSED SURFACING AT GRADE POINTS SHOWN ON THE TYPICAL SECTIONS. WHERE NO GRADE LINES ARE SHOWN, THE PROFILES SHOWN DENOTE THE TOP ELEVATION OF THE EXISTING PAVEMENT ALONG THE CENTER LINE OF SURVEY ON WHICH THE PROPOSED RESURFACING WILL BE PLACED. GRADE LINES MAY BE ADJUSTED BY THE ENGINEER IN ORDER TO SECURE A PROPER TIE-IN.

CLEARING:

CLEARING ON THIS PROJECT SHALL BE PERFORMED TO THE LIMITS ESTABLISHED BY METHOD II.

SUPERELEVATION:

ALL CURVES ON THIS PROJECT SHALL BE SUPERELEVATED IN ACCORDANCE WITH STD. NO. 225.04 USING THE RATE OF SUPERELEVATION AND RUNOFF SHOWN ON THE PLANS. SUPERELEVATION IS TO BE REVOLVED ABOUT THE GRADE POINTS SHOWN ON THE TYPICAL SECTIONS.

SHOULDER CONSTRUCTION:

ASPHALT, EARTH, AND CONCRETE SHOULDER CONSTRUCTION ON THE HIGH SIDE OF SUPERELEVATED CURVES SHALL BE IN ACCORDANCE WITH STD. NO. 560.01

SIDE ROADS:

THE CONTRACTOR WILL BE REQUIRED TO DO ALL NECESSARY WORK TO PROVIDE SUITABLE CONNECTIONS WITH ALL ROADS, STREETS, AND DRIVES ENTERING THIS PROJECT. THIS WORK WILL BE PAID FOR AT THE CONTRACT UNIT PRICE FOR THE PARTICULAR ITEMS INVOLVED.

SUBSURFACE DRAINS:

SUBSURFACE DRAINS SHALL BE CONSTRUCTED IN ACCORDANCE WITH STD. NO. 815.02 AT LOCATIONS DIRECTED BY THE ENGINEER.

DRIVEWAYS:

DRIVEWAYS SHALL BE CONSTRUCTED IN ACCORDANCE WITH STD. 848.02 USING 3 FOOT RADII OR RADII AS SHOWN ON THE PLANS. LOCATIONS OF DRIVES WILL BE AS SHOWN ON THE PLANS OR AS DIRECTED BY THE ENGINEER.

STREET TURNOUT:

STREET RETURNS SHALL BE CONSTRUCTED IN ACCORDANCE WITH STD. NO. 848.04 USING THE RADII NOTED ON PLANS.

GUARDRAIL:

THE GUARDRAIL LOCATIONS SHOWN ON THE PLANS MAY BE ADJUSTED DURING CONSTRUCTION AS DIRECTED BY THE ENGINEER. THE CONTRACTOR SHOULD CONSULT WITH THE ENGINEER PRIOR TO ORDERING GUARDRAIL MATERIAL.

TEMPORARY SHORING:

SHORING REQUIRED FOR THE MAINTENANCE OF TRAFFIC WILL BE PAID FOR AS "EXTRA WORK" IN ACCORDANCE WITH SECTION 104-7.

SUBSURFACE PLANS:

NO SUBSURFACE PLANS ARE AVAILABLE ON THIS PROJECT. THE CONTRACTOR SHOULD MAKE HIS OWN INVESTIGATION AS TO THE SUBSURFACE CONDITIONS.

UTILITIES:

UTILITY OWNERS ON THIS PROJECT ARE ENERGY UNITED, AT&T,

PIEDMONT NATURAL GAS COMPANY, CONTINUUM, SPIRIT COMMUNICATIONS,

CHARLOTTE WATER AND SEWER, CHARTER COMMUNICATIONS

ANY RELOCATION OF EXISTING UTILITIES WILL BE ACCOMPLISHED BY OTHERS, EXCEPT AS SHOWN ON THE PLANS.

RIGHT-OF-WAY MARKERS:

ALL RIGHT-OF-WAY MARKERS ON THIS PROJECT SHALL BE PLACED BY OTHERS.

CURB RAMPS

CURB RAMPS ARE SHOWN ON THE PLANS AT APPROXIMATE LOCATIONS. CONSTRUCT ALL CURB RAMPS ACCORDANCE WITH STD 848.06.

STANDARD DRAWINGS

EFF. 01-16-2024
REV.

2024 ROADWAY ENGLISH STANDARD DRAWINGS

The following Roadway Standards as appear in "Roadway Standard Drawings" Contracts Standards and Development Unit - N. C. Department of Transportation - Raleigh, N. C., Dated January 16, 2024 are applicable to this project and by reference hereby are considered a part of these plans:

STD.NO.	TITLE
DIVISION 2 - EARTHWORK	
200.02	Method of Clearing - Method II
225.02	Guide for Grading Subgrade - Secondary and Local
225.04	Method of Obtaining Superelevation - Two Lane Pavement
225.06	Method of Grading Sight Distance at Intersections
DIVISION 3 - PIPE CULVERTS	
300.01	Method of Pipe Installation (Use Details in Lieu of Standards for Sheets 1 and 2 of 2)
310.02	Parallel Pipe End Section - Precast Concrete Section for 15" to 24" Pipe
310.03	Cross Pipe End Section - Precast Concrete Section for 18" to 30" Pipe
310.10	Driveway Pipe Construction
DIVISION 5 - SUBGRADE, BASES AND SHOULDERS	
560.01	Method of Shoulder Construction - High Side of Superelevated Curve - Method I
DIVISION 6 - ASPHALT BASES AND PAVEMENTS	
654.01	Pavement Repairs
DIVISION 8 - INCIDENTALS	
815.02	Subsurface Drain
838.01	Concrete Endwall for Single and Double Pipe Culverts - 15" thru 48" Pipe 90 Skew
838.11	Brick Endwall for Single and Double Pipe Culverts - 15" thru 48" Pipe 90 Skew
838.80	Precast Endwalls - 12" thru 72" Pipe 90 Skew
840.00	Concrete Base Pad for Drainage Structures
840.01	Brick Catch Basin - 12" thru 54" Pipe
840.02	Concrete Catch Basin - 12" thru 54" Pipe
840.03	Frame, Grates and Hood - for Use on Standard Catch Basin
840.14	Concrete Drop Inlet - 12" thru 30" Pipe
840.15	Brick Drop Inlet - 12" thru 30" Pipe
840.16	Drop Inlet Frame and Grates - for use with Std. Dwg 840.14 and 840.15
840.18	Concrete Grated Drop Inlet Type 'B' - 12" thru 36" Pipe
840.19	Concrete Grated Drop Inlet Type 'D' - 12" thru 36" Pipe
840.24	Frames and Narrow Slot Sag Grates
840.25	Anchorage for Frames - Brick or Concrete or Precast
840.27	Brick Grated Drop Inlet Type 'B' - 12" thru 36" Pipe
840.28	Brick Grated Drop Inlet Type 'D' - 12" thru 36" Pipe
840.29	Frames and Narrow Slot Flat Grates
840.31	Concrete Junction Box - 12" thru 66" Pipe
840.32	Brick Junction Box - 12" thru 66" Pipe
840.34	Traffic Bearing Junction Box - for Use with Pipes 42" and Under
840.35	Traffic Bearing Grated Drop Inlet - for Cast Iron Double Frame and Grates
840.45	Precast Drainage Structure
840.46	Traffic Bearing Precast Drainage Structure
840.54	Manhole Frame and Cover
840.66	Drainage Structure Steps
840.71	Concrete and Brick Pipe Plug
840.72	Pipe Collar
846.01	Concrete Curb, Gutter and Curb & Gutter
848.01	Concrete Sidewalk (Use Detail in Lieu of Standard for Sheet 1 of 1)
848.02	Driveway Turnout - Radius Type
848.04	Street Turnout
848.06	Curb Ramp (Use Details in Lieu of Standards for Sheets 9 and 10 of 13)
848.07	Concrete Sidepath/Shared Use Path/Greenway Construction
852.01	Concrete Islands
852.04	Method for Placement of Drop Inlets in Grassed Median
852.05	Median Curb for Catch Basin
852.06	Method for Placement of Drop Inlets in Concrete Islands
852.07	Median Curb for Traffic Bearing Grated Drop Inlet for Use with 2'-9" Curb and Gutter (Use Detail in Lieu of Standard for Sheet 1 of 1)
852.10	Median Construction - with Curb and Gutter
862.01	Guardrail Placement (Use Details in Lieu of Standards for Sheets 4, 6, 12, and 14 of 15)
862.02	Guardrail Installation
876.01	Rip Rap in Channels and Ditches
876.02	Guide for Rip Rap at Pipe Outlets
876.04	Drainage Ditches with Class 'B' Rip Rap

18-SEP-2025 09:47
R:\Roadway\Proj\U5906_Rdy_tsh_1A.dgn
krowe2rs

Docusign Envelope ID: 89DA0246-5698-4053-BB60-AE753ECDB5AC

05/20/24

PROJECT REFERENCE NO.	SHEET NO.
U-5906	1B

Note: Not to Scale

STATE OF NORTH CAROLINA, DIVISION OF HIGHWAYS

CONVENTIONAL PLAN SHEET SYMBOLS

BOUNDARIES AND PROPERTY:

- State Line
- County Line
- Township Line
- City Line
- Reservation Line
- Property Line
- Existing Iron Pin (EIP) — EIP
- Computed Property Corner
- Existing Concrete Monument (ECM) — ECM
- Parcel / Sequence Number — 123
- Existing Fence Line
- Proposed Woven Wire Fence
- Proposed Chain Link Fence
- Proposed Barbed Wire Fence
- Existing Wetland Boundary — WLB
- Proposed Wetland Boundary — WLB
- Existing Endangered Animal Boundary — EAB
- Existing Endangered Plant Boundary — EPB
- Existing Historic Property Boundary — HPB
- Known Contamination Area: Soil — S
- Potential Contamination Area: Soil — S
- Known Contamination Area: Water — W
- Potential Contamination Area: Water — W
- Contaminated Site: Known or Potential

BUILDINGS AND OTHER CULTURE:

- Gas Pump Vent or U/G Tank Cap
- Sign — S
- Well — W
- Small Mine
- Foundation
- Area Outline
- Cemetery
- Building
- School
- Church
- Dam

HYDROLOGY:

- Stream or Body of Water
- Hydro, Pool or Reservoir
- Jurisdictional Stream — JS
- Buffer Zone 1 — BZ 1
- Buffer Zone 2 — BZ 2
- Flow Arrow
- Disappearing Stream
- Spring
- Wetland
- Proposed Lateral, Tail, Head Ditch — FLOW
- False Sump

RAILROADS:

- Standard Gauge — CSX TRANSPORTATION
- RR Signal Milepost — MILEPOST 35
- Switch — SWITCH
- RR Abandoned
- RR Dismantled

RIGHT OF WAY & PROJECT CONTROL:

- Primary Horiz Control Point
- Primary Horiz and Vert Control Point
- Secondary Horiz and Vert Control Point
- Vertical Benchmark
- Existing Right of Way Monument
- Proposed Right of Way Monument (Rebar and Cap)
- Proposed Right of Way Monument (Concrete)
- Existing Permanent Easement Monument
- Proposed Permanent Easement Monument (Rebar and Cap)
- Existing C/A Monument
- Proposed C/A Monument (Rebar and Cap)
- Proposed C/A Monument (Concrete)
- Existing Right of Way Line
- Proposed Right of Way Line
- Existing Control of Access Line
- Proposed Control of Access Line
- Proposed ROW and CA Line
- Existing Easement Line — E
- Proposed Temporary Construction Easement — E
- Proposed Temporary Drainage Easement — TDE
- Proposed Permanent Drainage Easement — PDE
- Proposed Permanent Drainage/Utility Easement — DUE
- Proposed Permanent Utility Easement — PUE
- Proposed Temporary Utility Easement — TUE
- Proposed Aerial Utility Easement — AUE

ROADS AND RELATED FEATURES:

- Existing Edge of Pavement
- Existing Curb
- Proposed Slope Stakes Cut — C
- Proposed Slope Stakes Fill — F
- Proposed Curb Ramp — CR
- Existing Metal Guardrail
- Proposed Guardrail
- Existing Cable Guiderail
- Proposed Cable Guiderail
- Equality Symbol
- Pavement Removal

VEGETATION:

- Single Tree
- Single Shrub
- Hedge
- Woods Line
- Orchard
- Vineyard — Vineyard

EXISTING STRUCTURES:

MAJOR:

- Bridge, Tunnel or Box Culvert — CONC
- Bridge Wing Wall, Head Wall and End Wall — CONC WW

MINOR:

- Head and End Wall — CONC HW
- Pipe Culvert
- Footbridge
- Drainage Box: Catch Basin, DI or JB — CB
- Paved Ditch Gutter
- Storm Sewer Manhole — S
- Storm Sewer — S

UTILITIES:

** SUE - Subsurface Utility Engineering*
LOS - Level of Service - A,B,C or D (Accuracy)

POWER:

- Existing Power Pole
- Proposed Power Pole
- Existing Joint Use Pole
- Proposed Joint Use Pole
- Power Manhole — P
- Power Line Tower
- Power Transformer
- U/G Power Cable Hand Hole — HH
- H-Frame Pole
- U/G Power Line Test Hole (SUE - LOS A)*
- U/G Power Line (SUE - LOS B)* — P
- U/G Power Line (SUE - LOS C)* — P
- U/G Power Line (SUE - LOS D)* — P

TELEPHONE:

- Existing Telephone Pole
- Proposed Telephone Pole
- Telephone Manhole — T
- Telephone Pedestal — T
- Telephone Cell Tower
- U/G Telephone Cable Hand Hole — HH
- U/G Telephone Test Hole (SUE - LOS A)*
- U/G Telephone Cable (SUE - LOS B)* — T
- U/G Telephone Cable (SUE - LOS C)* — T
- U/G Telephone Cable (SUE - LOS D)* — T
- U/G Telephone Conduit (SUE - LOS B)* — TC
- U/G Telephone Conduit (SUE - LOS C)* — TC
- U/G Telephone Conduit (SUE - LOS D)* — TC
- U/G Fiber Optics Cable (SUE - LOS B)* — T FO
- U/G Fiber Optics Cable (SUE - LOS C)* — T FO
- U/G Fiber Optics Cable (SUE - LOS D)* — T FO

WATER:

- Water Manhole — W
- Water Meter
- Water Valve
- Water Hydrant
- U/G Water Line Test Hole (SUE - LOS A)*
- U/G Water Line (SUE - LOS B)* — W
- U/G Water Line (SUE - LOS C)* — W
- U/G Water Line (SUE - LOS D)* — W
- Above Ground Water Line — A/G Water

TV:

- TV Pedestal — C
- TV Tower
- U/G TV Cable Hand Hole — HH
- U/G TV Test Hole (SUE - LOS A)*
- U/G TV Cable (SUE - LOS B)* — TV
- U/G TV Cable (SUE - LOS C)* — TV
- U/G TV Cable (SUE - LOS D)* — TV
- U/G Fiber Optic Cable (SUE - LOS B)* — TV FO
- U/G Fiber Optic Cable (SUE - LOS C)* — TV FO
- U/G Fiber Optic Cable (SUE - LOS D)* — TV FO

GAS:

- Gas Valve
- Gas Meter
- U/G Gas Line Test Hole (SUE - LOS A)*
- U/G Gas Line (SUE - LOS B)* — G
- U/G Gas Line (SUE - LOS C)* — G
- U/G Gas Line (SUE - LOS D)* — G
- Above Ground Gas Line — A/G Gas

SANITARY SEWER:

- Sanitary Sewer Manhole
- Sanitary Sewer Cleanout
- U/G Sanitary Sewer Line — SS
- Above Ground Sanitary Sewer — A/G Sanitary Sewer
- SS Force Main Line Test Hole (SUE - LOS A)*
- SS Force Main Line (SUE - LOS B)* — FSS
- SS Force Main Line (SUE - LOS C)* — FSS
- SS Force Main Line (SUE - LOS D)* — FSS

MISCELLANEOUS:

- Utility Pole
- Utility Pole with Base
- Utility Located Object
- Utility Traffic Signal Box — S
- Utility Unknown U/G Line (SUE - LOS B)* — ?UTL
- U/G Tank; Water, Gas, Oil
- Underground Storage Tank, Approx. Loc. — UST
- A/G Tank; Water, Gas, Oil
- Geoenvironmental Boring
- Abandoned According to Utility Records — AATUR
- End of Information — E.O.I.

Docusign Envelope ID: 47ED77CB-1551-4664-B3CA-49677EFDFE2C

6/2/99

PROJECT REFERENCE NO.	SHEET NO.
U-5906	2A-1

ROADWAY DESIGN ENGINEER — SEAL 042287 — ALLISON C. DAVIS — 9/16/2025

PAVEMENT DESIGN ENGINEER — SEAL 024664 — JOSEPH T. HOLLAND — 9/16/2025

DOCUMENT NOT CONSIDERED FINAL UNLESS ALL SIGNATURES COMPLETED

RS&H 1520 SOUTH BOULEVARD, SUITE 200 CHARLOTTE, NC 28203 NC FIRM LICENSE No: F-0493

FINAL PAVEMENT SCHEDULE

C1	PROP. APPROX. 1.5″ ASPHALT CONCRETE SURFACE COURSE, TYPE S9.5C, AT AN AVERAGE RATE OF 168 LBS. PER SQ. YD.	J1	PROP. 6″ AGGREGATE BASE COURSE.	R6	5″ MONOLITHIC CONCRETE ISLAND. (KEYED IN)		
C2	PROP. APPROX. 3″ ASPHALT CONCRETE SURFACE COURSE, TYPE S9.5C, AT AN AVERAGE RATE OF 168 LBS. PER SQ. YD. IN EACH OF TWO LAYERS.	K2	8″ CLASS IV SUBGRADE STABILIZATION	R7	1′-6″ CONCRETE CURB AND GUTTER, CLASS AA CONCRETE		
C3	PROP. VAR. DEPTH ASPHALT CONCRETE SURFACE COURSE, TYPE S9.5C, AT AN AVERAGE RATE OF 112 LBS. PER SQ. YD. PER 1″ DEPTH, TO BE PLACED IN LAYERS NOT LESS THAN 1.5″ IN DEPTH OR GREATER THAN 2″ IN DEPTH.	N1	GEOTEXTILE FOR SUBGRADE STABILIZATION	R8	9″ x 18″ CONCRETE CURB.		
C4	PROP. APPROX. 2.5″ ASPHALT CONCRETE SURFACE COURSE, TYPE S9.5C, AT AN AVERAGE RATE OF 140 LBS. PER SQ. YD. IN EACH OF TWO LAYERS.	R1	2′-6″ CONCRETE CURB AND GUTTER.	S1	4″ CONCRETE SIDEWALK.		
D1	PROP. APPROX. 4″ ASPHALT CONCRETE INTERMEDIATE COURSE, TYPE I19.0C, AT AN AVERAGE RATE OF 456 LBS. PER SQ. YD.	R2	1′-6″ CONCRETE CURB AND GUTTER	S2	4″ CONCRETE SIDEPATH.	V2	3″ MILLING
D2	PROP. VAR. DEPTH ASPHALT CONCRETE INTERMEDIATE COURSE, TYPE I19.0C, AT AN AVERAGE RATE OF 114 LBS. PER SQ. YD. PER 1″ DEPTH, TO BE PLACED IN LAYERS NOT LESS THAN 2.5″ IN DEPTH OR GREATER THAN 4″ IN DEPTH.	R3	5″ MONOLITHIC CONCRETE ISLAND. (SURFACE MOUNTED)	T	EARTH MATERIAL.	V3	0″-1.5″ MILLING
E1	PROP. APPROX. 4″ ASPHALT CONCRETE BASE COURSE, TYPE B25.0C, AT AN AVERAGE RATE OF 456 LBS. PER SQ. YD.	R4	8″ x 18″ CONCRETE CURB.	U	EXISTING PAVEMENT.	V4	0″-3″ MILLING
E2	PROP. VAR. DEPTH ASPHALT CONCRETE BASE COURSE, TYPE B25.0C, AT AN AVERAGE RATE OF 114 LBS. PER SQ. YD. PER 1″ DEPTH. TO PLACED IN LAYERS NOT LESS THAN 3″ IN DEPTH OR GREATER THAN 5.5″ IN DEPTH.	R5	12″ CONCRETE TRUCK APRON, CLASS AA CONCRETE WITH WELDED WIRE MESH (EITHER 4X4 W5.5 X W5.5 OR 6X6 W8.5 X W8.5) 15′ RADIAL JOINT SPACING.	V1	1.5″ MILLING	W	VARIABLE DEPTH ASPHALT PAVEMENT (SEE STANDARD WEDGING DETAIL SHEET No. 2A-1).

NOTE: PAVEMENT EDGES ARE 1:1 UNLESS SHOWN OTHERWISE

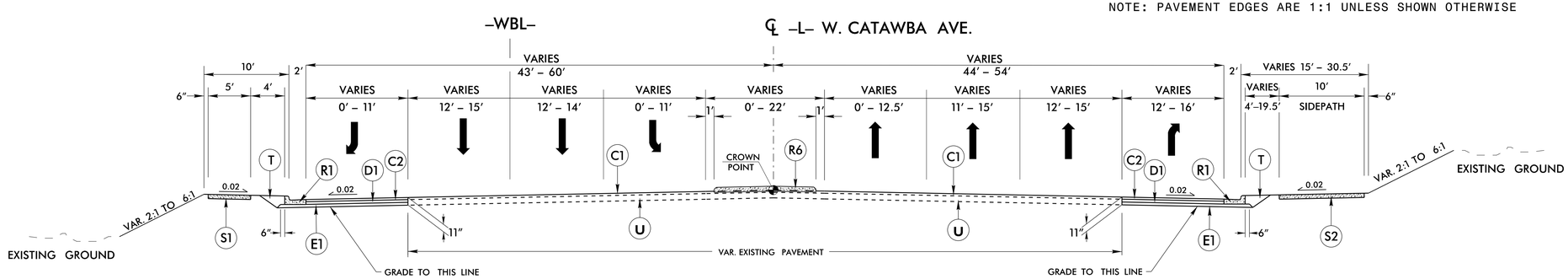

TYPICAL SECTION NO. 1

–L– STA. 31+65.00 TO STA. 38+00.00

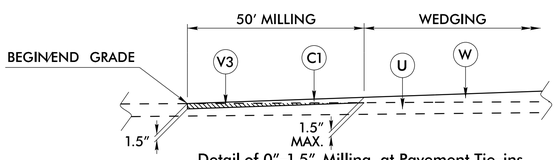

Detail of 0″–1.5″ Milling at Pavement Tie–ins

–Y1B– STA. 13+96.00 TO 14+46.00
–Y2– STA. 13+60.00 TO 14+10.00
–Y3A– STA. 11+80.00 TO 12+30.00
–Y3B– STA. 13+40.00 TO 13+90.00
–Y5– STA. 11+50.00 TO 12+00.00
–Y6A– STA. 13+25.00 TO 13+75.00
–RPC– STA. 12+59.00 TO 13+09.00
–DRIVE1– STA. 11+05.00 TO 11+55.00

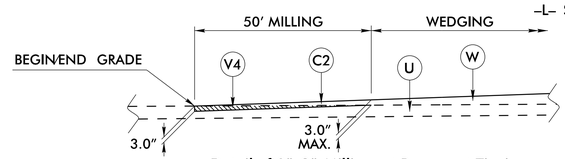

Detail of 0″–3″ Milling at Pavement Tie–ins

–Y1– STA. 12+50.00 TO 13+00.00
–Y1– STA. 14+93.58 TO 15+43.58
–Y4A– STA. 12+25.00 TO 12+75.00
–Y4B– STA. 20+09.53 TO 20+59.53

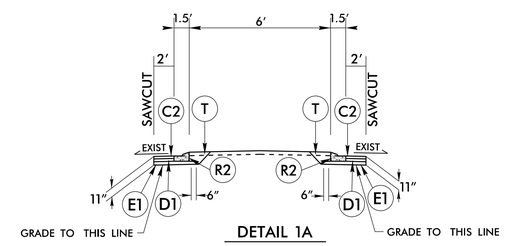

DETAIL 1A

PROP. MEDIAN REPLACEMENT ON OLD TORRENCE CHAPEL RD.
–L– 35+15 +/– TO 35+24 +/– LT

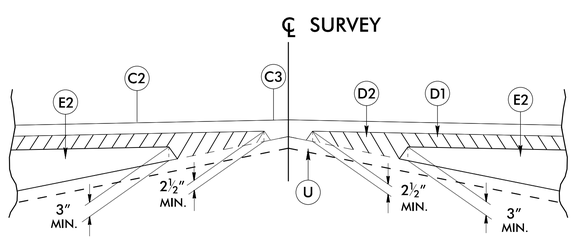

Detail Showing Method of Wedging

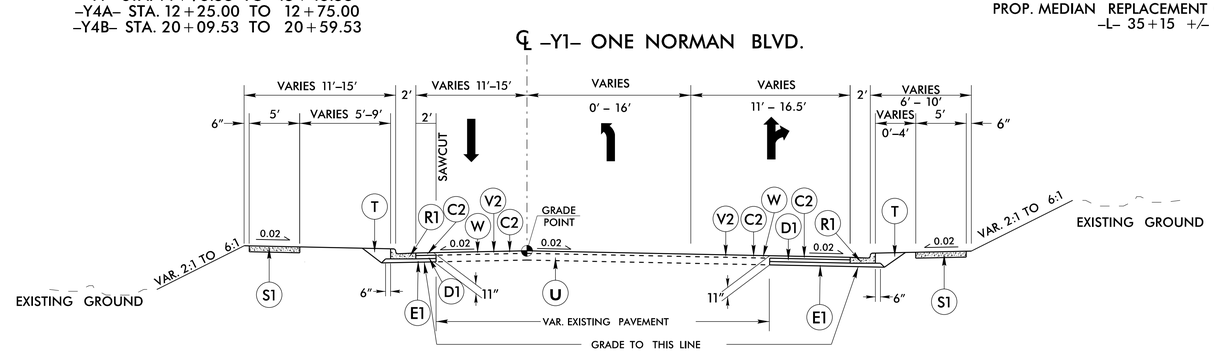

TYPICAL SECTION NO. 2

–Y1– STA. 12+50.00 TO 15+43.58

JS SEP 2025 08:15
R:\Roadway\Proj\U5906_Rdy_typ.dgn
Kawasaki

Docusign Envelope ID: 47ED77CB-1551-4664-B3CA-49677EFDFE2C

PROJECT REFERENCE NO.	SHEET NO.
U-5906	2A-2

ROADWAY DESIGN ENGINEER — SEAL 042237 — NORTH CAROLINA PROFESSIONAL ENGINEER — ALISON C. DRAGE — 9/16/2025

PAVEMENT DESIGN ENGINEER — SEAL 024664 — NORTH CAROLINA PROFESSIONAL ENGINEER — JOSEPH T. HOLLAND — 9/16/2025

DOCUMENT NOT CONSIDERED FINAL UNLESS ALL SIGNATURES COMPLETED

RS&H 1520 SOUTH BOULEVARD, SUITE 200 CHARLOTTE, NC 28203 NC FIRM LICENSE No: F-0493

FINAL PAVEMENT SCHEDULE	
C2	3″ S9.5C
D1	4″ I19.0C
E1	4″ B25.0C
K2	8″ CLASS IV SUBGRADE
N1	GEOTEXTILE
R1	2′-6″ C&G
R6	5″ ISLAND (KEYED IN)
S1	4″ SIDEWALK
T	EARTH MATERIAL
U	EXIST. PAVEMENT
V2	3″ MILLING
W	WEDGING

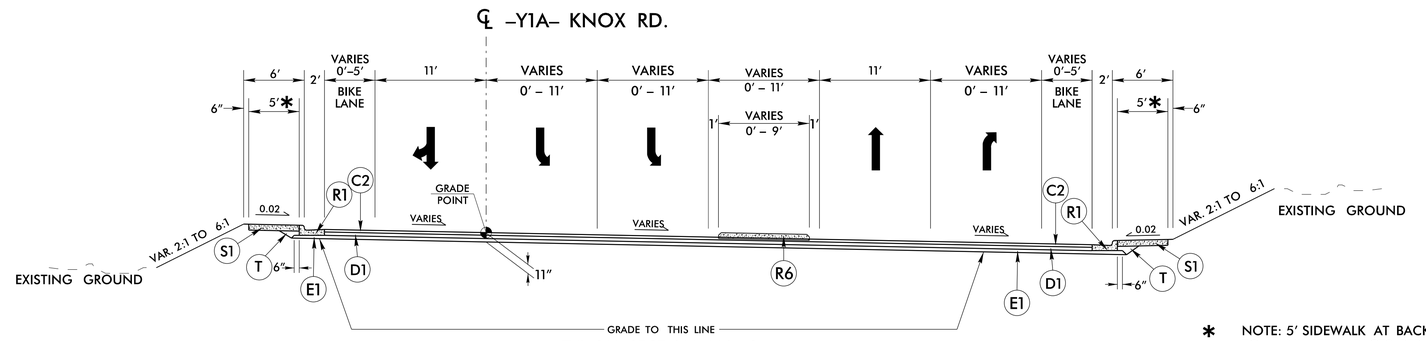

TYPICAL SECTION NO. 3

–Y1A– STA. 10+26.04 TO 14+26.07

* NOTE: 5′ SIDEWALK AT BACK OF CURB PROPOSED TO MINIMIZE IMPACTS PER PROJECT SCOPE.

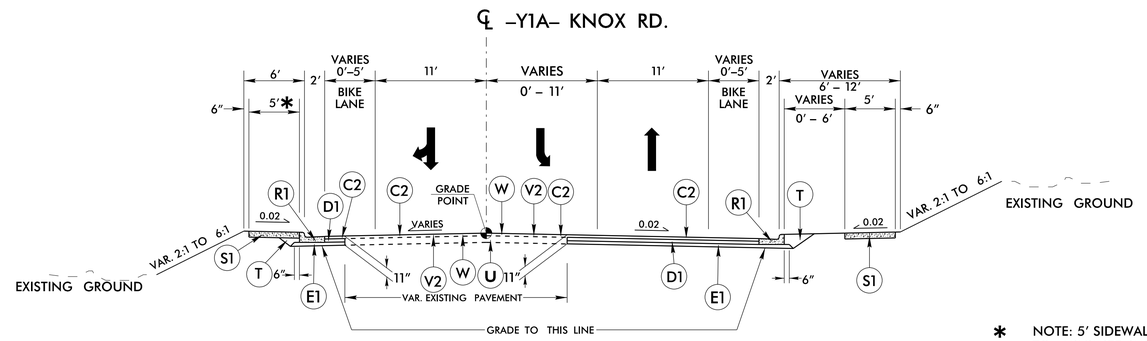

TYPICAL SECTION NO. 4

–Y1A– STA. 14+26.07 TO 18+00.26

–Y1A– STA. 37+66.40 TO 39+00.00

* NOTE: 5′ SIDEWALK AT BACK OF CURB PROPOSED TO MINIMIZE IMPACTS PER PROJECT SCOPE.

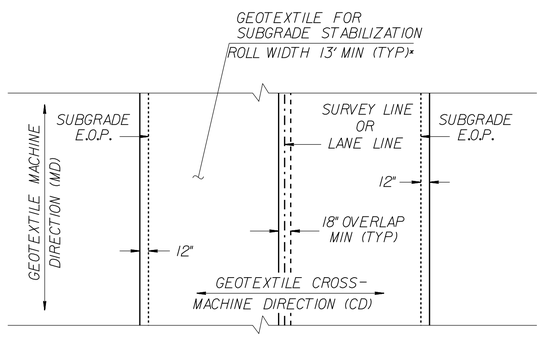

GEOTEXTILE FOR SUBGRADE STABILIZATION PLACEMENT (PLAN VIEW)

(100% COVERAGE REQUIRED)

*INSTALL GEOTEXTILE FOR SUBGRADE STABILIZATION WITH MINIMUM ROLL WIDTH UNDER ROADWAY EDGES AND SHOULDERS ADJACENT TO FILL SLOPES

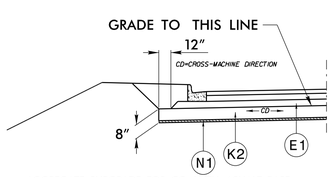

AGGREGATE SUBGRADE FOR CG WITH ASHALT BASE

–Y1A– STA. 23+00.00 TO 26+50.00

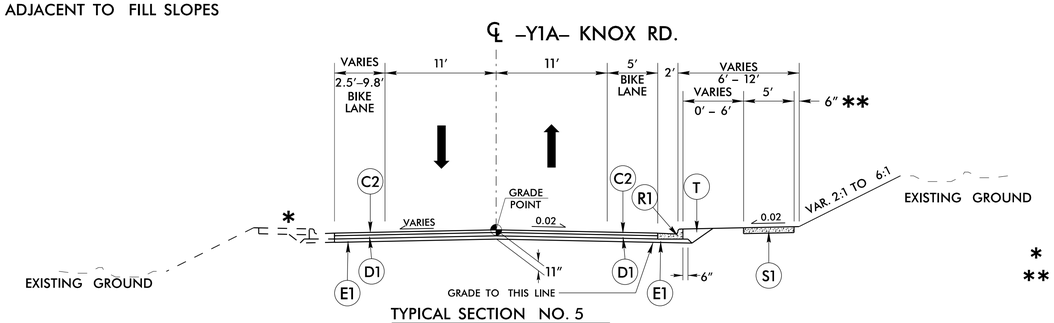

TYPICAL SECTION NO. 5

–Y1A– STA. 18+00.26 TO 37+66.40

* RETAIN EXISTING CURB AND GUTTER AND SIDEWALK

** 2′ WITH HANDRAIL

6/2/99
JS SEP 2025 08:15
R:\Roadway\Proj\U5906_Rdy_typ.dgn
KAWILSON

Docusign Envelope ID: 47ED77CB-1551-4664-B3CA-49677EFDFE2C

PROJECT REFERENCE NO.	SHEET NO.
U-5906	2A-3
ROADWAY DESIGN ENGINEER	PAVEMENT DESIGN ENGINEER
9/16/2025	9/16/2025

DOCUMENT NOT CONSIDERED FINAL UNLESS ALL SIGNATURES COMPLETED

RS&H 1520 SOUTH BOULEVARD, SUITE 200 CHARLOTTE, NC 28203 NC FIRM LICENSE No: F-0493

FINAL PAVEMENT SCHEDULE	
C1	1.5″ S9.5C
C2	3″ S9.5C
D1	4″ I19.0C
E1	4″ B25.0C
R1	2′-6″ C&G
R3	5″ ISLAND (SURFACE)
R6	5″ ISLAND (KEYED IN)
S1	4″ SIDEWALK
S2	4″ SIDEPATH
T	EARTH MATERIAL
U	EXIST. PAVEMENT
W	WEDGING

℄ –Y1A– KNOX RD.

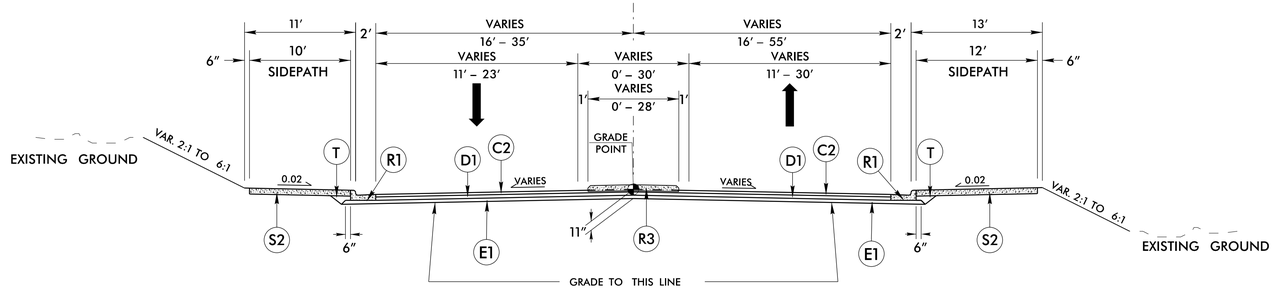

TYPICAL SECTION NO. 6

–Y1A– STA. 39+00.00 TO 40+45.11

NOTE: PAVEMENT WEDGING FROM –Y1A– STA. 37+66.40 TO STA. 39+00.00

℄ –Y1B– KNOX RD.

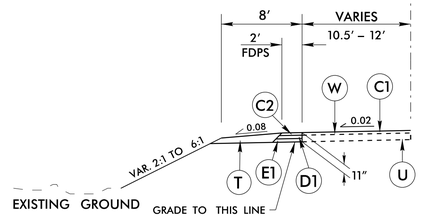

DETAIL 7A

–Y1B– STA. 14+06.77 TO STA. 14+46.00

℄ –Y1B– KNOX RD.

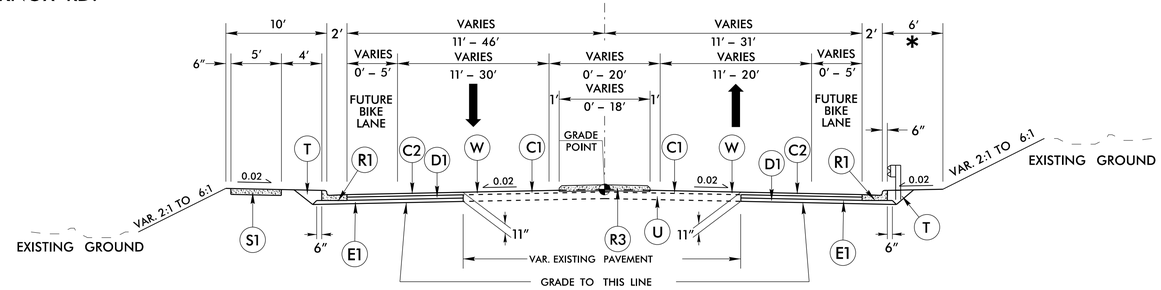

TYPICAL SECTION NO. 7

–Y1B– STA. 10+60.34 TO 14+46.00

* NOTE: SEE SHEET 2B–10 FOR PROP. RETAINING WALL DETAIL.

℄ –Y2– KNOX RD. REALIGNMENT

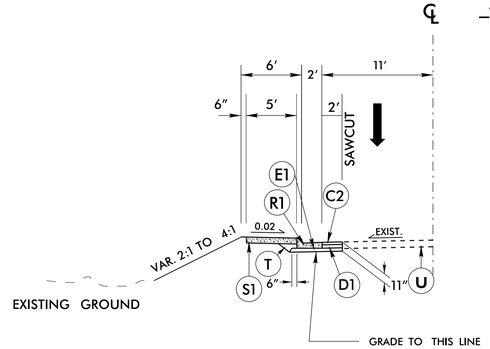

TYPICAL SECTION NO. 8

–Y2– STA. 12+11.74 TO 13+60.00

6/2/99
16-SEP-2025 08:15
R:\Roadway\Proj\U5906_Rdy_typ.dgn
kfawcett

Docusign Envelope ID: 47ED77CB-1551-4664-B3CA-49677EFDFE2C

PROJECT REFERENCE NO.	SHEET NO.
U-5906	2A-4

ROADWAY DESIGN ENGINEER
NORTH CAROLINA PROFESSIONAL SEAL 042287 ENGINEER ALLISON C. DAVIS
9/16/2025

PAVEMENT DESIGN ENGINEER
NORTH CAROLINA PROFESSIONAL SEAL 034964 ENGINEER JOSEPH T. HOLLAND
9/16/2025

DOCUMENT NOT CONSIDERED FINAL UNLESS ALL SIGNATURES COMPLETED

RS&H 1520 SOUTH BOULEVARD, SUITE 200 CHARLOTTE, NC 28203 NC FIRM LICENSE No: F-0493

FINAL PAVEMENT SCHEDULE	
C1	1.5″ S9.5C
C2	3″ S9.5C
D1	4″ I19.0C
E1	4″ B25.0C
R1	2′-6″ C&G
R4	8″X18″ CURB
R5	12″ CONCRETE TRUCK APRON
R7	1′-6″ C&G, CLASS AA CONC.
S1	4″ SIDEWALK
S2	4″ SIDEPATH
T	EARTH MATERIAL
U	EXIST. PAVEMENT
W	WEDGING

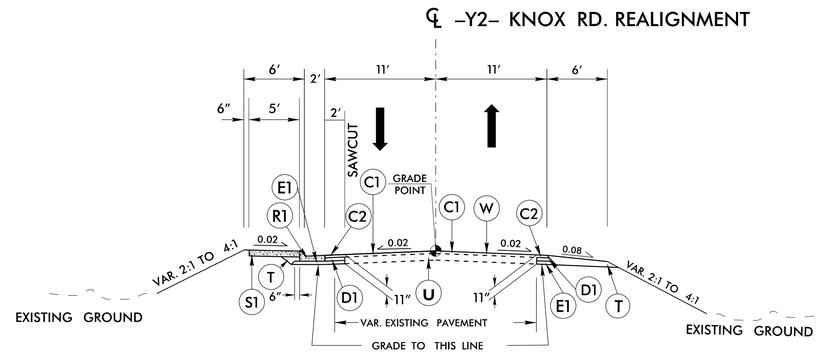

TYPICAL SECTION NO. 9

–Y2– STA. 13+60.00 TO 14+40.00

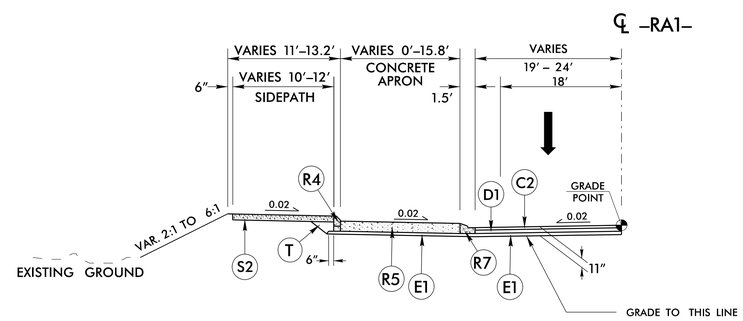

DETAIL 11A

SEE ROUNDABOUT DETAIL SHEET 2B–1

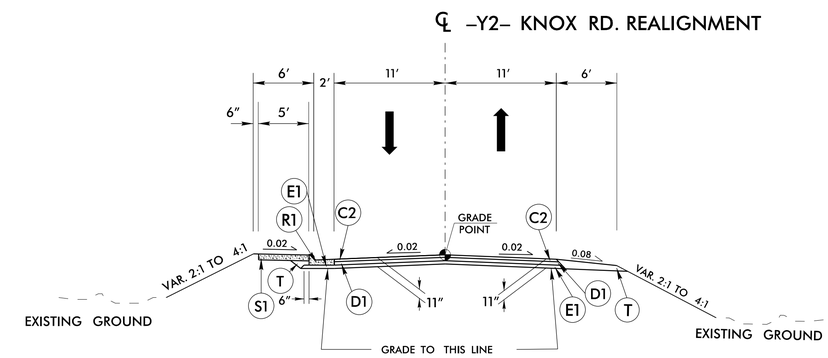

TYPICAL SECTION NO. 10

–Y2– STA. 14+40.00 TO 15+80.48

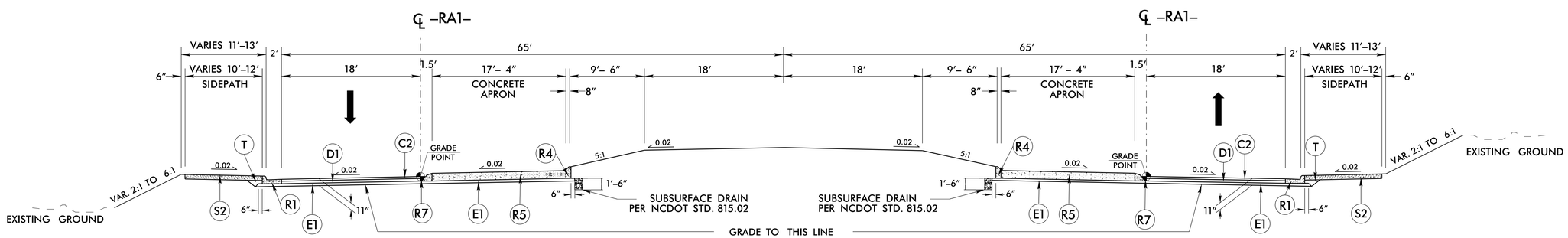

TYPICAL SECTION NO. 11

–RA1– STA. 10+00.00 TO 12+95.29

16-SEP-2025 08:15
R:\Roadway\Proj\U5906_Rdy_typ.dgn

Docusign Envelope ID: 47ED77CB-1551-4664-B3CA-49677EFDFE2C

PROJECT REFERENCE NO.	SHEET NO.
U-5906	2A-5

ROADWAY DESIGN ENGINEER
NORTH CAROLINA PROFESSIONAL SEAL 042257 ENGINEER ALLISON C. DRAKE
9/16/2025

PAVEMENT DESIGN ENGINEER
NORTH CAROLINA PROFESSIONAL SEAL 024964 ENGINEER JOSEPH T. HOLLAND
9/16/2025

DOCUMENT NOT CONSIDERED FINAL UNLESS ALL SIGNATURES COMPLETED

RS&H 1520 SOUTH BOULEVARD, SUITE 200 CHARLOTTE, NC 28203 NC FIRM LICENSE No: F-0493

FINAL PAVEMENT SCHEDULE	
C1	1.5″ S9.5C
C2	3″ S9.5C
D1	4″ I19.0C
E1	4″ B25.0C
R1	2′-6″ C&G
R3	5″ ISLAND (SURFACE)
S1	4″ SIDEWALK
T	EARTH MATERIAL
U	EXIST. PAVEMENT
W	WEDGING

℄ –Y2A– HARKEN DR.

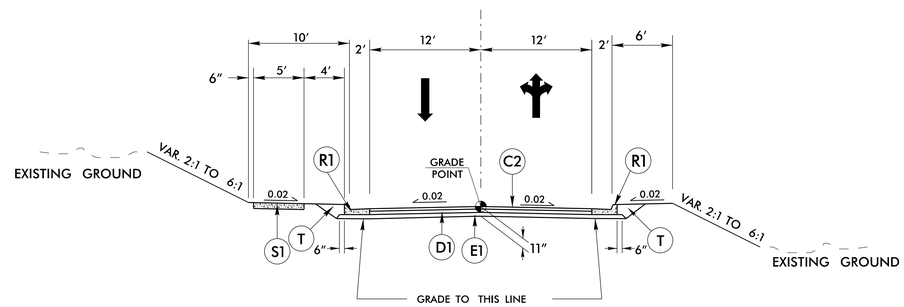

TYPICAL SECTION NO. 12

–Y2A– STA. 9+60.00 TO 11+34.43

℄ –Y3A–/–Y3B– TORRENCE CHAPEL RD.

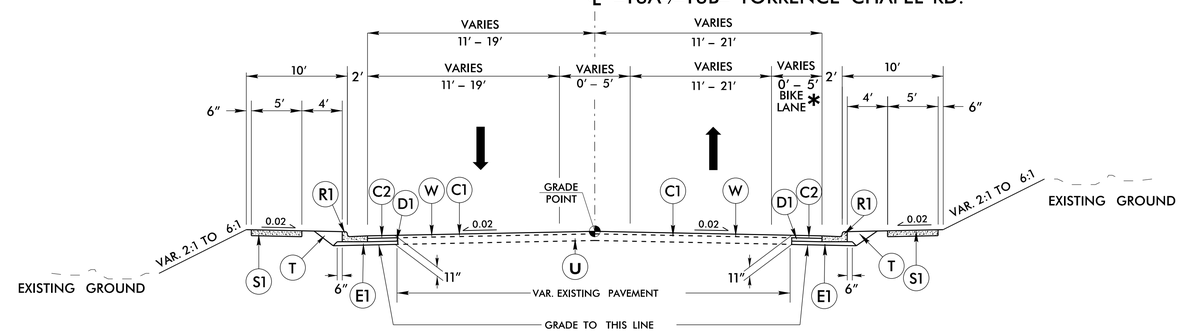

TYPICAL SECTION NO. 13

–Y3A– STA. 11+80.00 TO 13+48.90
–Y3B– STA. 12+62.00 TO 13+90.00

* NOTE: PROPOSED BIKE LANE ONLY PROVIDED ON –Y3B– RT.

NOTE: 1.5″ MILLING AND 1.5″ RESURFACING ON TORRENCE CHAPEL ROAD FROM –Y3A– STA. 10+00.00 TO –Y3A– 11+80.00.

℄ –Y3A–/–Y3B– TORRENCE CHAPEL RD.

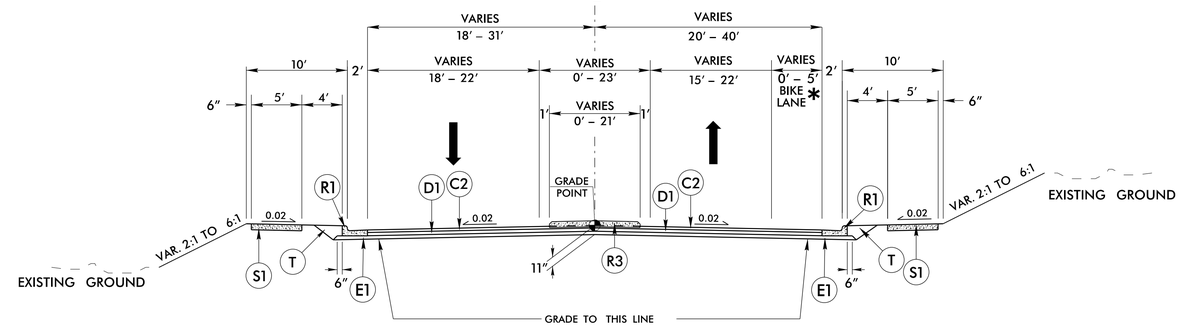

TYPICAL SECTION NO. 14

–Y3A– STA. 13+48.90 TO 14+30.13
–Y3B– STA. 10+62.39 TO 12+62.00

* NOTE: PROPOSED BIKE LANE ONLY PROVIDED ON –Y3B– RT.

6/2/99
16-SEP-2025 08:15
R:\Roadway\Proj\U5906_Rdy_typ.dgn

Docusign Envelope ID: 47ED77CB-1551-4664-B3CA-49677EFDFE2C

FINAL PAVEMENT SCHEDULE	
C2	3″ S9.5C
D1	4″ I19.0C
E1	4″ B25.0C
R1	2′-6″ C&G
R2	1′-6″ C&G
S1	4″ SIDEWALK
S2	4″ SIDEPATH
T	EARTH MATERIAL
U	EXIST. PAVEMENT
V1	1.5″ MILLING
W	WEDGING

PROJECT REFERENCE NO.	SHEET NO.
U-5906	2A-6

ROADWAY DESIGN ENGINEER — SEAL 042257 — 9/16/2025

PAVEMENT DESIGN ENGINEER — SEAL 049641 — 9/16/2025

DOCUMENT NOT CONSIDERED FINAL UNLESS ALL SIGNATURES COMPLETED

RS&H 1520 SOUTH BOULEVARD, SUITE 200 CHARLOTTE, NC 28203 NC FIRM LICENSE No: F-0493

℄ –Y4A– LIVERPOOL PKWY.

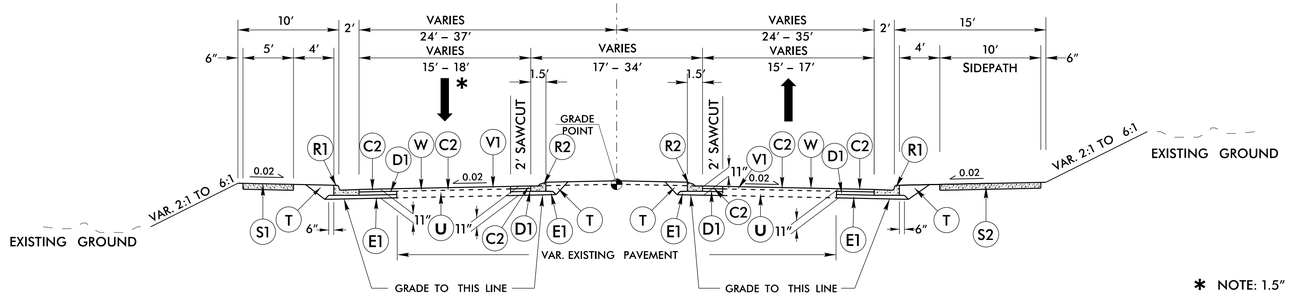

✱ NOTE: 1.5″ MILLING & 3″ OVERLAY –Y4A– LT FROM 11+95.00 TO 12+25.00

TYPICAL SECTION NO. 15

–Y4A– STA. 12+25.00 TO 14+98.89

℄ –Y4B– LIVERPOOL PKWY.

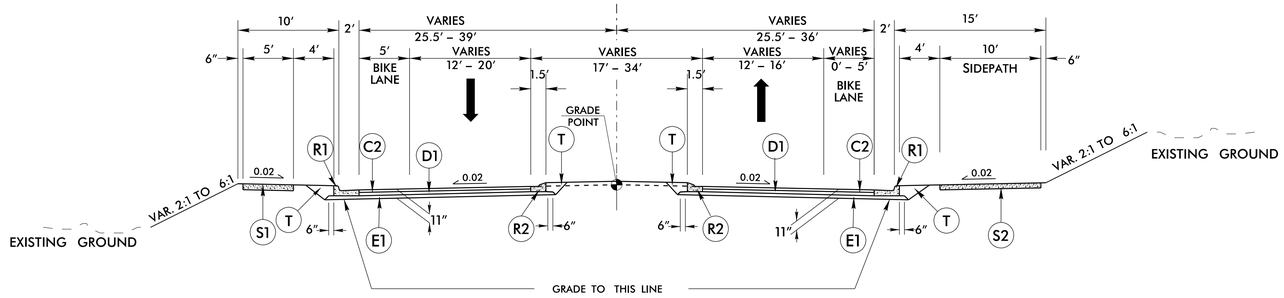

TYPICAL SECTION NO. 16

–Y4B– STA. 10+65.00 TO 14+00.00

℄ –Y4B– LIVERPOOL PKWY.

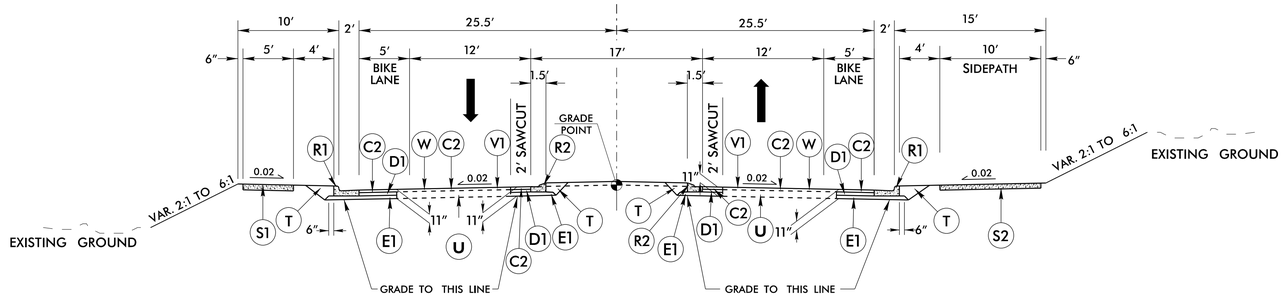

TYPICAL SECTION NO. 17

–Y4B– STA. 14+00.00 TO 16+30.00

16-SEP-2025 08:15
R:\Roadway\Proj\U5906_Rdy_typ.dgn
KC0025

Docusign Envelope ID: 47ED77CB-1551-4664-B3CA-49677EFDFE2C

PROJECT REFERENCE NO.	SHEET NO.
U-5906	2A-7

ROADWAY DESIGN ENGINEER
SEAL 042367 NORTH CAROLINA PROFESSIONAL ENGINEER ALLISON C. DAVIS
9/16/2025

PAVEMENT DESIGN ENGINEER
SEAL 024864 NORTH CAROLINA PROFESSIONAL ENGINEER JOSEPH T. HOLLAND
9/16/2025

DOCUMENT NOT CONSIDERED FINAL UNLESS ALL SIGNATURES COMPLETED

RS&H 1520 SOUTH BOULEVARD, SUITE 200 CHARLOTTE, NC 28203 NC FIRM LICENSE No: F-0493

FINAL PAVEMENT SCHEDULE	
C2	3″ S9.5C
D1	4″ I19.0C
E1	4″ B25.0C
R1	2′-6″ C&G
R3	5″ ISLAND (SURFACE)
R4	8″X18″ CURB
R5	12″ CONCRETE TRUCK APRON
R7	1′-6″ C&G, CLASS AA CONC.
R8	9″x18″ CURB
S1	4″ SIDEWALK
S2	4″ SIDEPATH
T	EARTH MATERIAL
U	EXIST. PAVEMENT
V1	1.5″ MILLING
W	WEDGING

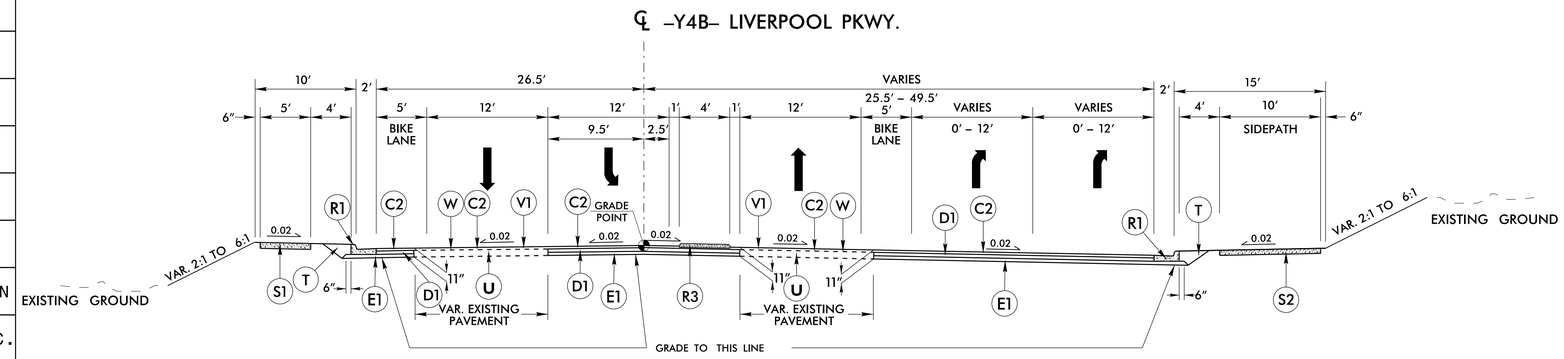

TYPICAL SECTION NO. 18

–Y4B– STA. 16+30.00 TO 20+59.53

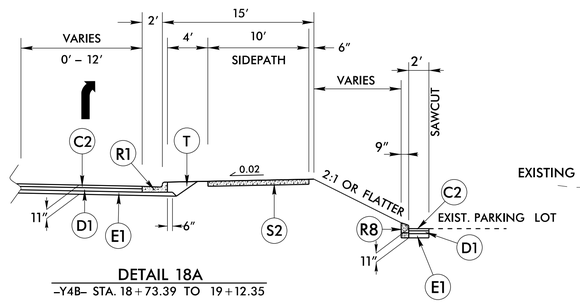

DETAIL 18A

–Y4B– STA. 18+73.39 TO 19+12.35

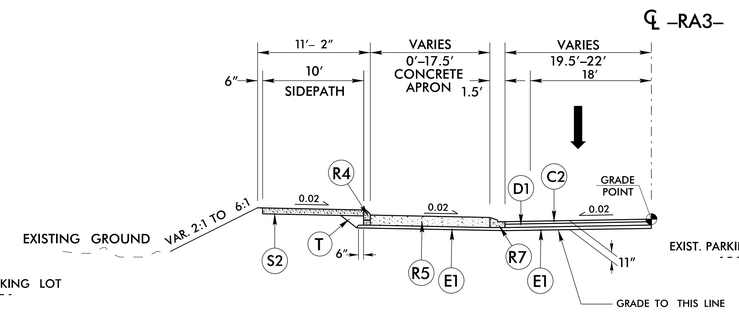

DETAIL 19A

SEE ROUNDABOUT DETAIL SHEET 2B–3

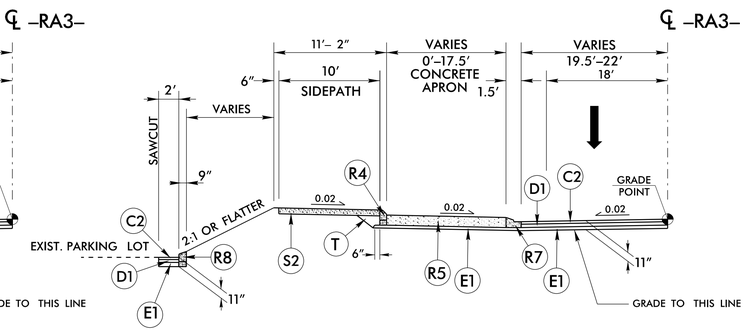

DETAIL 19B

–RA3– STA. 10+35.05 TO 10+60.88

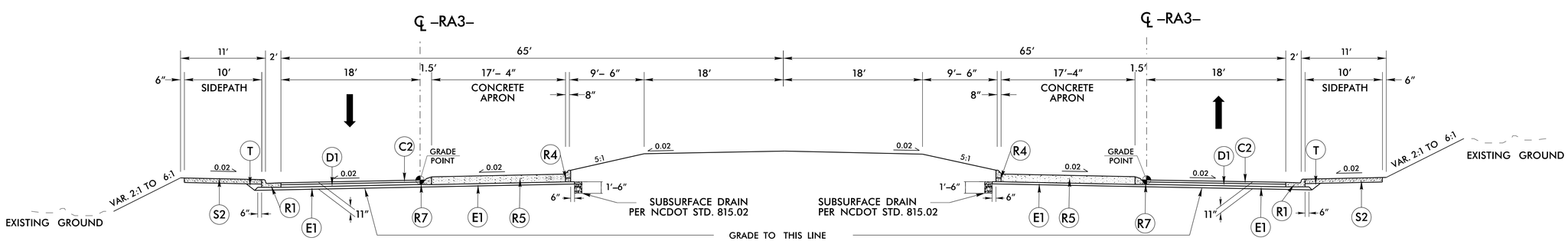

TYPICAL SECTION NO. 19

–RA3– STA. 10+00.00 TO 12+95.29

6/2/99
15-SEP-2025 08:15
R:\Roadway\Proj\U5906_Rdy_typ.dgn
k:\pwworking\

Docusign Envelope ID: 47ED77CB-1551-4664-B3CA-49677EFDFE2C

FINAL PAVEMENT SCHEDULE	
C1	1.5″ S9.5C
C2	3″ S9.5C
D1	4″ I19.0C
E1	4″ B25.0C
R1	2′-6″ C&G
R3	5″ ISLAND (SURFACE)
R4	8″x18″ CURB
S1	4″ SIDEWALK
T	EARTH MATERIAL
U	EXIST. PAVEMENT
W	WEDGING

PROJECT REFERENCE NO.	SHEET NO.
U-5906	2A-8

ROADWAY DESIGN ENGINEER — SEAL 042267 — ALLISON C. DRAKE — 9/16/2025

PAVEMENT DESIGN ENGINEER — SEAL 029964 — JOSEPH T. HOLLAND — 9/16/2025

DOCUMENT NOT CONSIDERED FINAL UNLESS ALL SIGNATURES COMPLETED

RS&H 1520 SOUTH BOULEVARD, SUITE 200 CHARLOTTE, NC 28203 NC FIRM LICENSE No: F-0493

℄ –Y5– CHARTWELL CENTER DR.

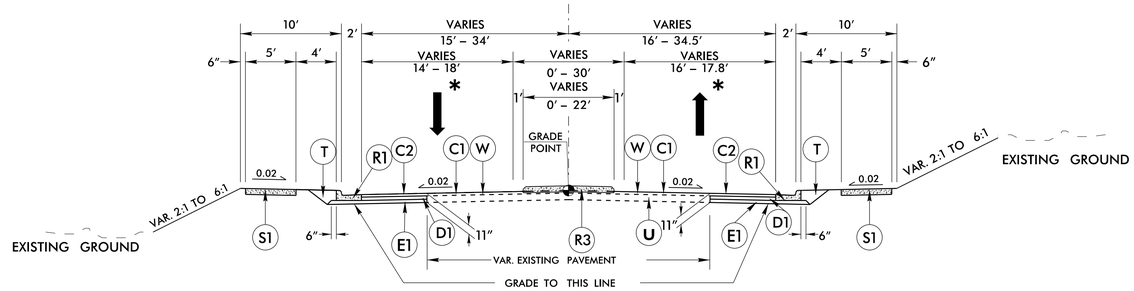

TYPICAL SECTION NO. 20

–Y5– STA. 10+18.00 TO 12+00.00

✱ NOTE: 1.5″ MILLING & 1.5″ OVERLAY –Y5– FROM 12+00.00 TO 12+55.00

℄ –Y6A– TORRENCE CHAPEL RD.

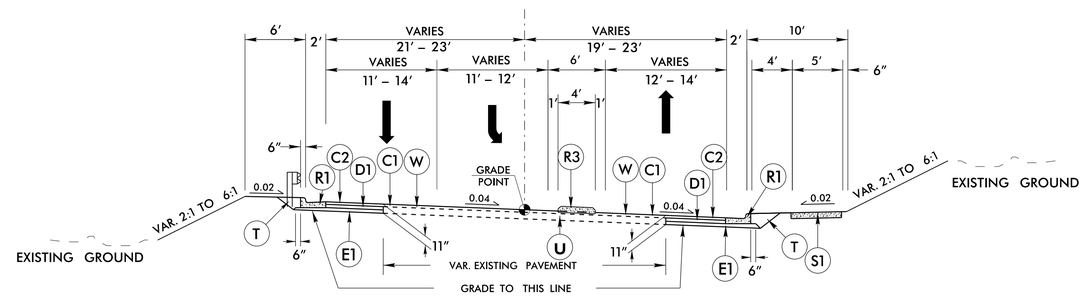

TYPICAL SECTION NO. 21

–Y6A– STA. 13+25.00 TO 14+75.00

℄ –Y6A– TORRENCE CHAPEL RD.

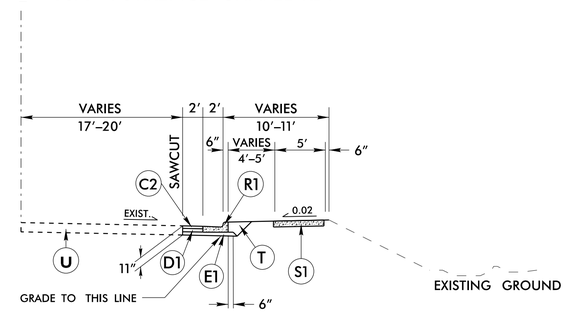

DETAIL 21A

–Y6A– STA. 11+48.86 TO STA. 13+25.00

–Y6A– TORRENCE CHAPEL RD. ℄

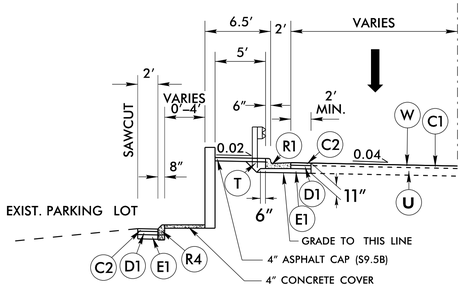

–Y6A– RETAINING WALL #4 DETAIL

–Y6A– 14+30.04 TO –Y6A– 16+65.15 LT

℄ –Y6A– TORRENCE CHAPEL RD.

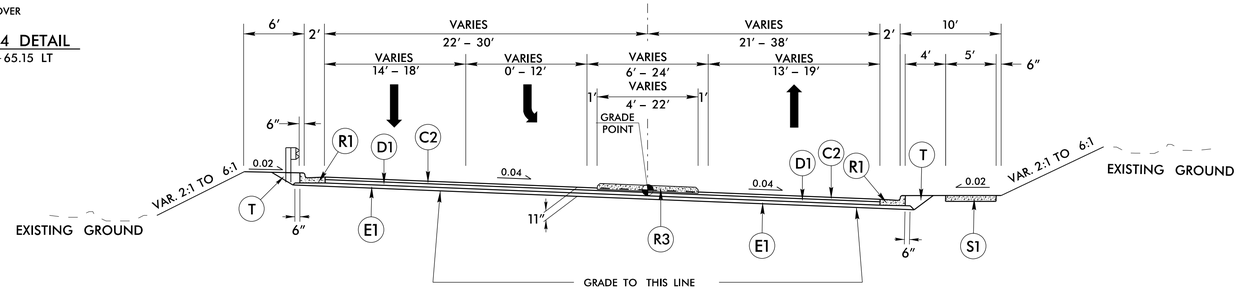

TYPICAL SECTION NO. 22

–Y6A– STA. 14+75.00 TO 17+09.34

6/2/99

16-SEP-2025 08:15
R:\Roadway\Proj\U5906_Rdy_typ.dgn
kcrawford

Docusign Envelope ID: 47ED77CB-1551-4664-B3CA-49677EFDFE2C

PROJECT REFERENCE NO.	SHEET NO.
U-5906	2A-9
ROADWAY DESIGN ENGINEER	PAVEMENT DESIGN ENGINEER
9/16/2025	9/16/2025

DOCUMENT NOT CONSIDERED FINAL UNLESS ALL SIGNATURES COMPLETED

RS&H 1520 SOUTH BOULEVARD, SUITE 200 CHARLOTTE, NC 28203 NC FIRM LICENSE No: F-0493

FINAL PAVEMENT SCHEDULE	
C1	1.5″ S9.5C
C2	3″ S9.5C
D1	4″ I19.0C
E1	4″ B25.0C
R1	2′-6″ C&G
R3	5″ ISLAND (SURFACE)
R4	8″x18″ CURB
R5	12″ CONCRETE TRUCK APRON
R7	1′-6″ C&G, CLASS AA CONC.
R8	9″x18″ CURB
S2	4″ SIDEPATH
T	EARTH MATERIAL
U	EXIST. PAVEMENT
W	WEDGING

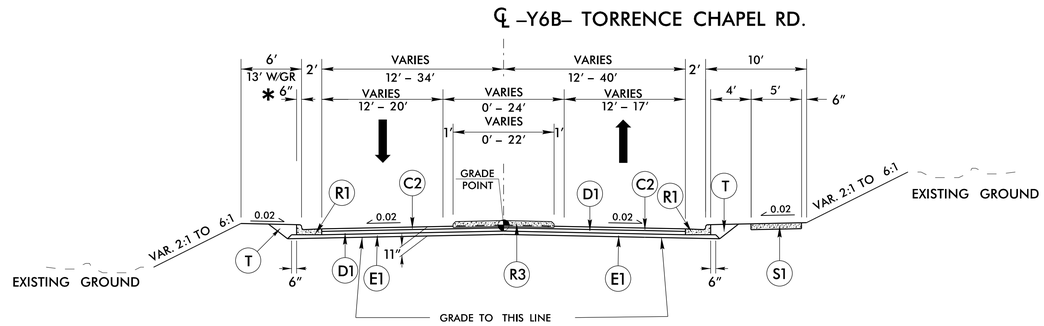

TYPICAL SECTION NO. 23

–Y6B– STA. 10+65.02 TO 13+70.00

✱ NOTE: SEE SHEETS W2 THRU W4 & W7 THRU W8 FOR PROP. RETAINING WALL DETAIL

NOTE: 1.5″ MILL AND 1.5″ RESURFACE –Y6B– FROM STA. 13+70.00 TO 14+70.00 FOR DRIVEWAY CONSTRUCTION.

NOTE: 1.5″ MILL AND 1.5″ RESURFACE TORRENCE CHAPEL ROAD FROM –Y6B– STA. 14+70.00 TO –Y6B– 18+24.21.

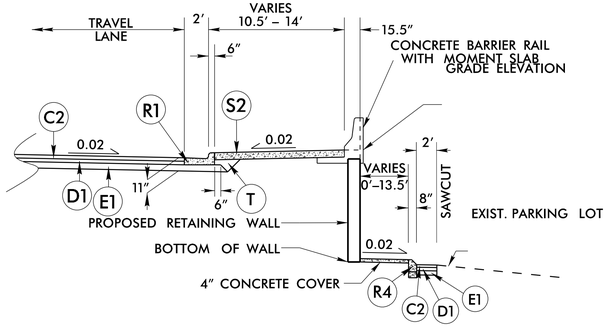

–RA2– RETAINING WALL #4, #5 DETAIL

–RA2– 10+19.92 TO –RA2– 12+84.48 RT
–RA2– 11+93.58 TO –RA2– 12+54.95 RT

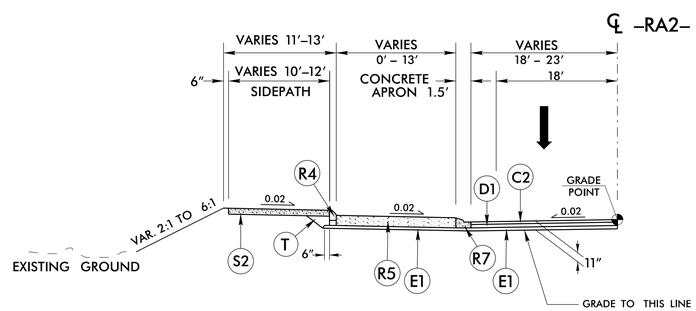

DETAIL 24A

SEE ROUNDABOUT DETAIL SHEET 2B–2

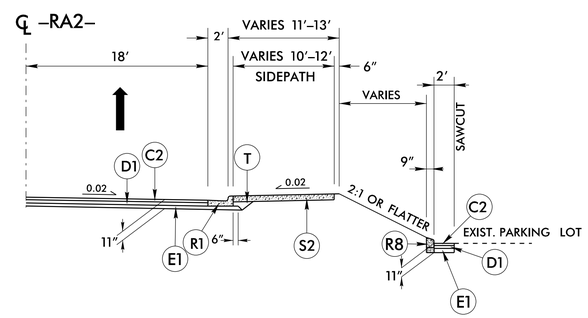

DETAIL 24B

–RA2– STA. 10+79.41 TO 11+12.41

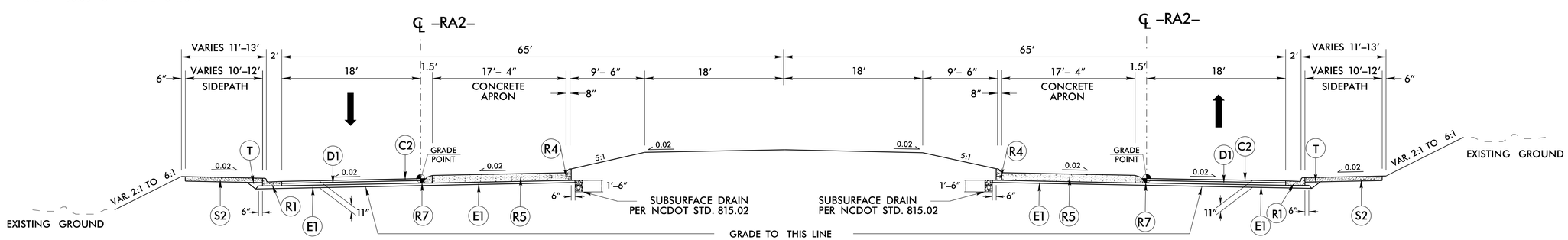

ROUNDABOUT TYPICAL SECTION NO. 24

–RA2– STA. 10+00.00 TO 12+95.29

16-SEP-2025 08:15
R:\Roadway\Proj\U5906_Rdy_typ.dgn

Docusign Envelope ID: 47ED77CB-1551-4664-B3CA-49677EFDFE2C

PROJECT REFERENCE NO.	SHEET NO.
U-5906	2A-10

ROADWAY DESIGN ENGINEER — SEAL 042257 — NORTH CAROLINA PROFESSIONAL ENGINEER — ALLISON C. DANIEL — 9/16/2025

PAVEMENT DESIGN ENGINEER — SEAL 034664 — NORTH CAROLINA PROFESSIONAL ENGINEER — JOSEPH T. HOLLAND — 9/16/2025

DOCUMENT NOT CONSIDERED FINAL UNLESS ALL SIGNATURES COMPLETED

RS&H 1520 SOUTH BOULEVARD, SUITE 200 CHARLOTTE, NC 28203 NC FIRM LICENSE No: F-0493

FINAL PAVEMENT SCHEDULE	
C1	1.5″ S9.5C
C2	3″ S9.5C
C4	2.5″ S9.5C
D1	4″ I19.0C
E1	4″ B25.0C
J1	6″ ABC
R1	2′-6″ C&G
R2	1′-6″ C&G
R3	5″ ISLAND (SURFACE)
R4	8″x18″ CURB
S1	4″ SIDEWALK
S2	4″ SIDEPATH
T	EARTH MATERIAL
U	EXIST. PAVEMENT
W	WEDGING

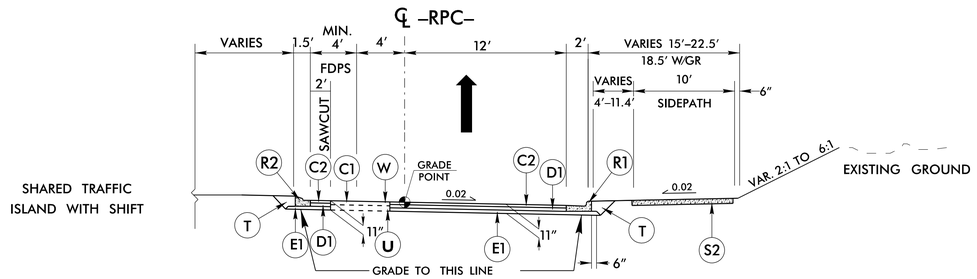

TYPICAL SECTION NO. 25
–RPC– STA. 10+00.00 TO 13+09.00

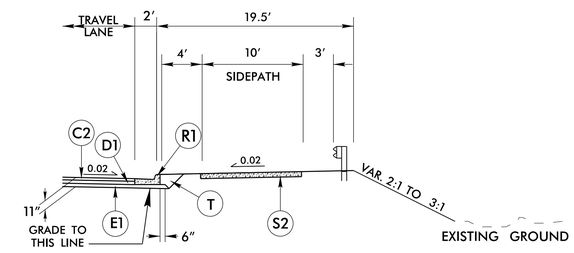

DETAIL 25A
GUARDRAIL BEHIND SIDEPATH

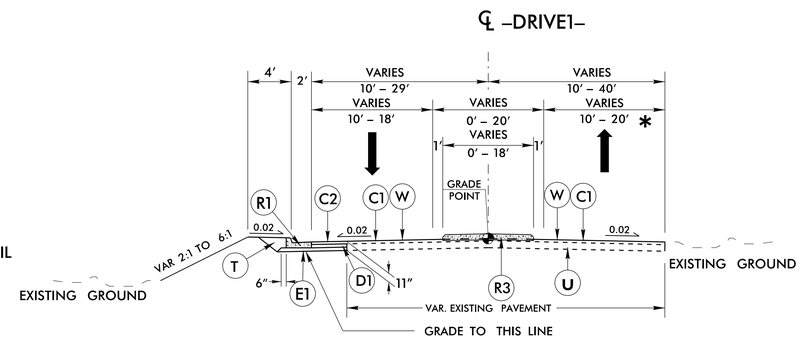

TYPICAL SECTION NO. 26
–DRIVE1– STA. 10+18.01 TO 11+55.00

* NOTE: PROPOSED PAVEMENT TO TIE TO EXIST PARKING LOT, SEE PLANS.

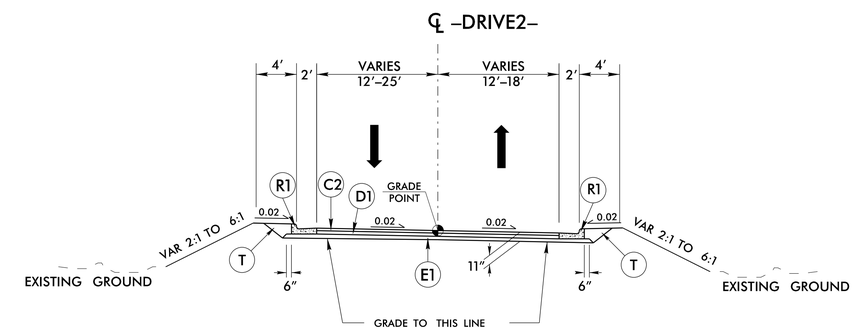

TYPICAL SECTION NO. 27
–DRIVE2– STA. 10+23.00 TO 11+55.00

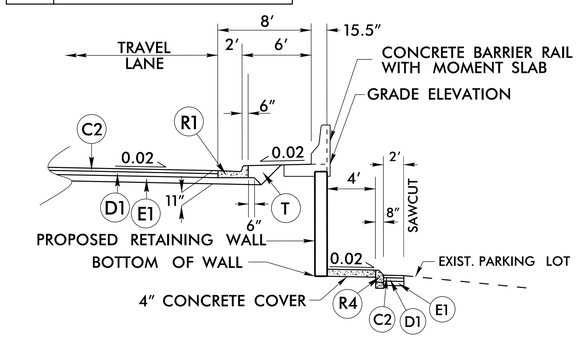

–DRIVE3– RETAINING WALL #4, #5 DETAIL
–DRIVE3– 10+84.99 TO –DRIVE3– 11+99.62 RT
–DRIVE3– 10+99.94 TO –DRIVE3– 11+99.04 LT

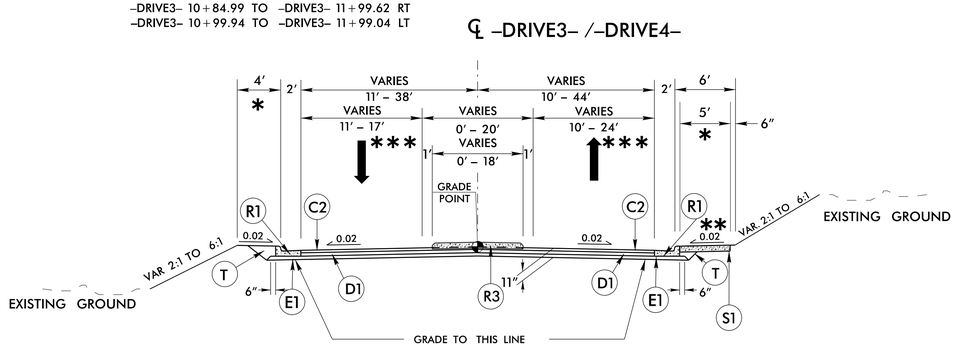

TYPICAL SECTION NO. 28
–DRIVE3– STA. 10+85.00 TO 12+37.63
–DRIVE4– STA. 10+18.04 TO 11+20.00

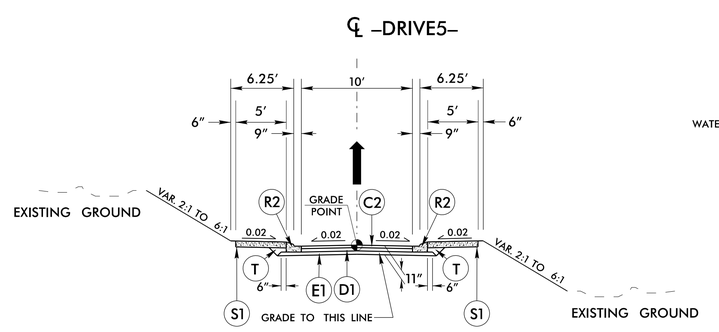

TYPICAL SECTION NO. 29
–DRIVE5– STA. 10+26.79 TO 10+96.00

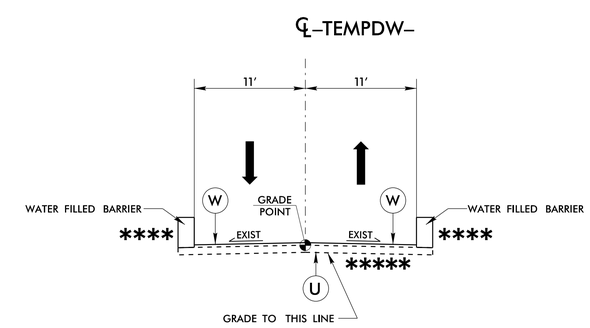

TYPICAL SECTION NO. 30
–TEMPDW– STA. 10+18.87 TO 12+30.25

* NOTE: SEE SHEETS W1 THRU W8 FOR PROP. RETAINING WALL DETAIL
** NOTE: PROPOSED SIDEWALK ONLY ON –DRIVE4–.
*** NOTE: 1.5″ MILL & 1.5″ OVERLAY –DRIVE3– FROM 10+20.00 TO 10+85.00
**** NOTE: SKINNY DRUMS –TEMPDW– FROM 10+18.87 TO 10+87.42
***** NOTE: REPLACE EXISTING PLANTED MEDIAN WITH 2.5″ S9.5B (C4) AND 6″ ABC (J1)

6/2/99
16-SEP-2025 08:15
R:\Roadway\Proj\U5906_Rdy_typ.dgn
kmoore

Docusign Envelope ID: 47ED77CB-1551-4664-B3CA-49677EFDFE2C

6/2/99

PROJECT REFERENCE NO.	SHEET NO.
U-5906	2A-11
ROADWAY DESIGN ENGINEER	PAVEMENT DESIGN ENGINEER
SEAL 042257 NORTH CAROLINA PROFESSIONAL ENGINEER ALLISON C. DRAKE	SEAL 024864 NORTH CAROLINA PROFESSIONAL ENGINEER JOSEPH T. HOLLAND
9/16/2025	9/16/2025

DOCUMENT NOT CONSIDERED FINAL UNLESS ALL SIGNATURES COMPLETED

RS&H 1520 SOUTH BOULEVARD, SUITE 200
CHARLOTTE, NC 28203
NC FIRM LICENSE No: F-0493

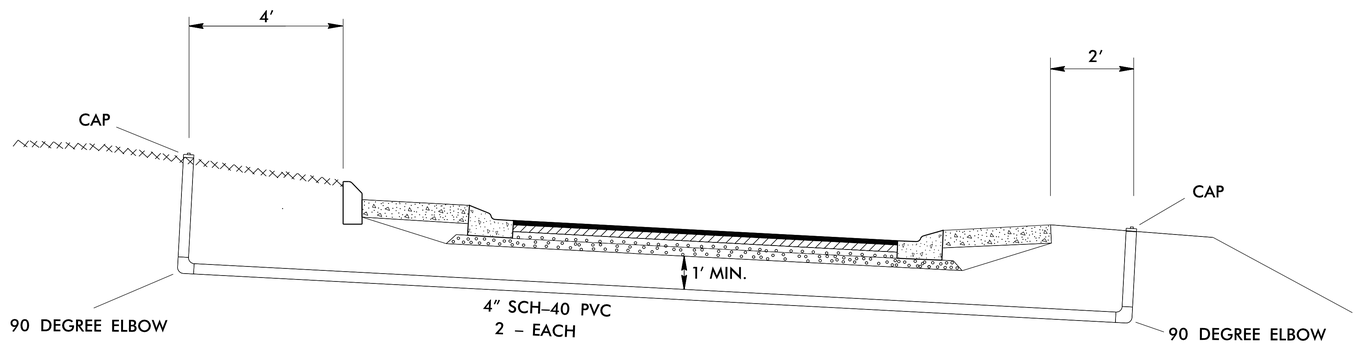

CONDUIT INSTALLATION AT ROUNDABOUTS

NOTE: SEE PLANS FOR ACTUAL DIMENSIONS.
DETAIL IS FOR INFORMATIONAL USE ONLY.

MONOLITHIC CONCRETE ISLAND WITH
RECESSED PEDESTRIAN REFUGE DETAIL

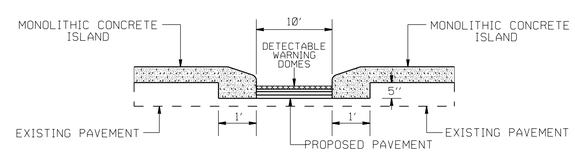

16-SEP-2025 08:15
H:\Roadway\Proj\U5906_Rdy_typ.dgn
kcpeters

Docusign Envelope ID: 1ECDE3C7-8F10-4ED0-82E1-988B482028F6

6/2/99

ROUNDABOUT –RA1– DETAIL

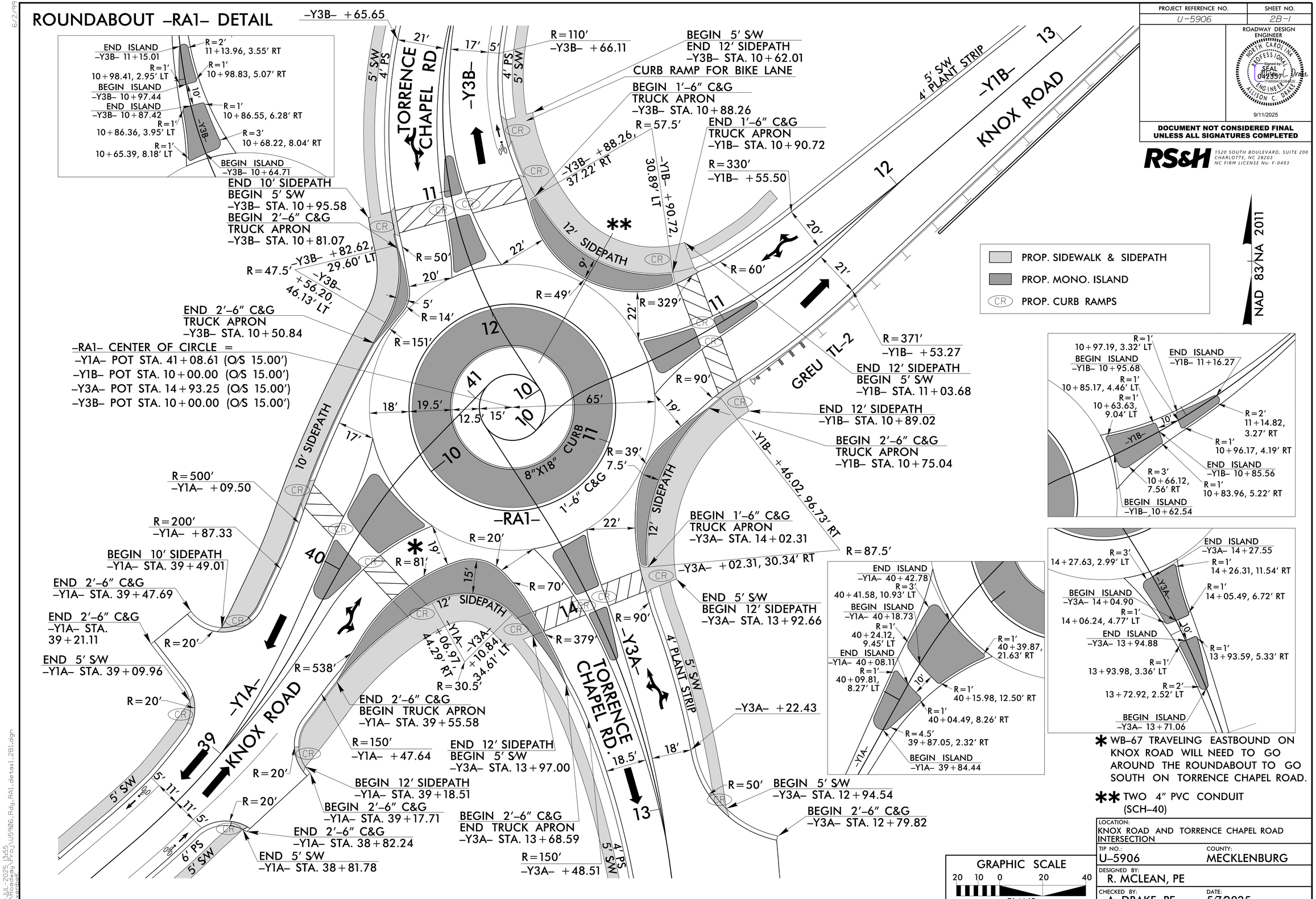

✱ WB–67 TRAVELING EASTBOUND ON KNOX ROAD WILL NEED TO GO AROUND THE ROUNDABOUT TO GO SOUTH ON TORRENCE CHAPEL ROAD.

✱✱ TWO 4″ PVC CONDUIT (SCH–40)

GRAPHIC SCALE
20 10 0 20 40
PLANS

PROJECT REFERENCE NO.	SHEET NO.
U-5906	2B-1

ROADWAY DESIGN ENGINEER
NORTH CAROLINA PROFESSIONAL SEAL 042357 ENGINEER ALLISON C. DRAKE
Signed by: DocuSign Envelope ID: 1ECDE3C7-8F10-4ED0-82E1-988B482028F6
9/11/2025

DOCUMENT NOT CONSIDERED FINAL UNLESS ALL SIGNATURES COMPLETED

RS&H 1520 SOUTH BOULEVARD, SUITE 200 CHARLOTTE, NC 28203 NC FIRM LICENSE No: F-0493

LOCATION: KNOX ROAD AND TORRENCE CHAPEL ROAD INTERSECTION	
TIP NO.: U–5906	COUNTY: MECKLENBURG
DESIGNED BY: R. MCLEAN, PE	
CHECKED BY: A. DRAKE, PE	DATE: 5/7/2025

15-JUL-2025 13:55
R:\Roadway\Proj\U5906_Rdy_RA1_detail_2B1.dgn
lxerbak

Docusign Envelope ID: 79825C42-4947-42C3-8C55-78AC39904793

ROUNDABOUT –RA2– DETAIL

PROJECT REFERENCE NO.	SHEET NO.
U-5906	2B-2

ROADWAY DESIGN ENGINEER
NORTH CAROLINA PROFESSIONAL SEAL 042357 ENGINEER ALLISON C. DRAKE
9/11/2025

DOCUMENT NOT CONSIDERED FINAL UNLESS ALL SIGNATURES COMPLETED

RS&H 1520 SOUTH BOULEVARD, SUITE 200 CHARLOTTE, NC 28203 NC FIRM LICENSE No: F-0493

NAD 83/NA 2011

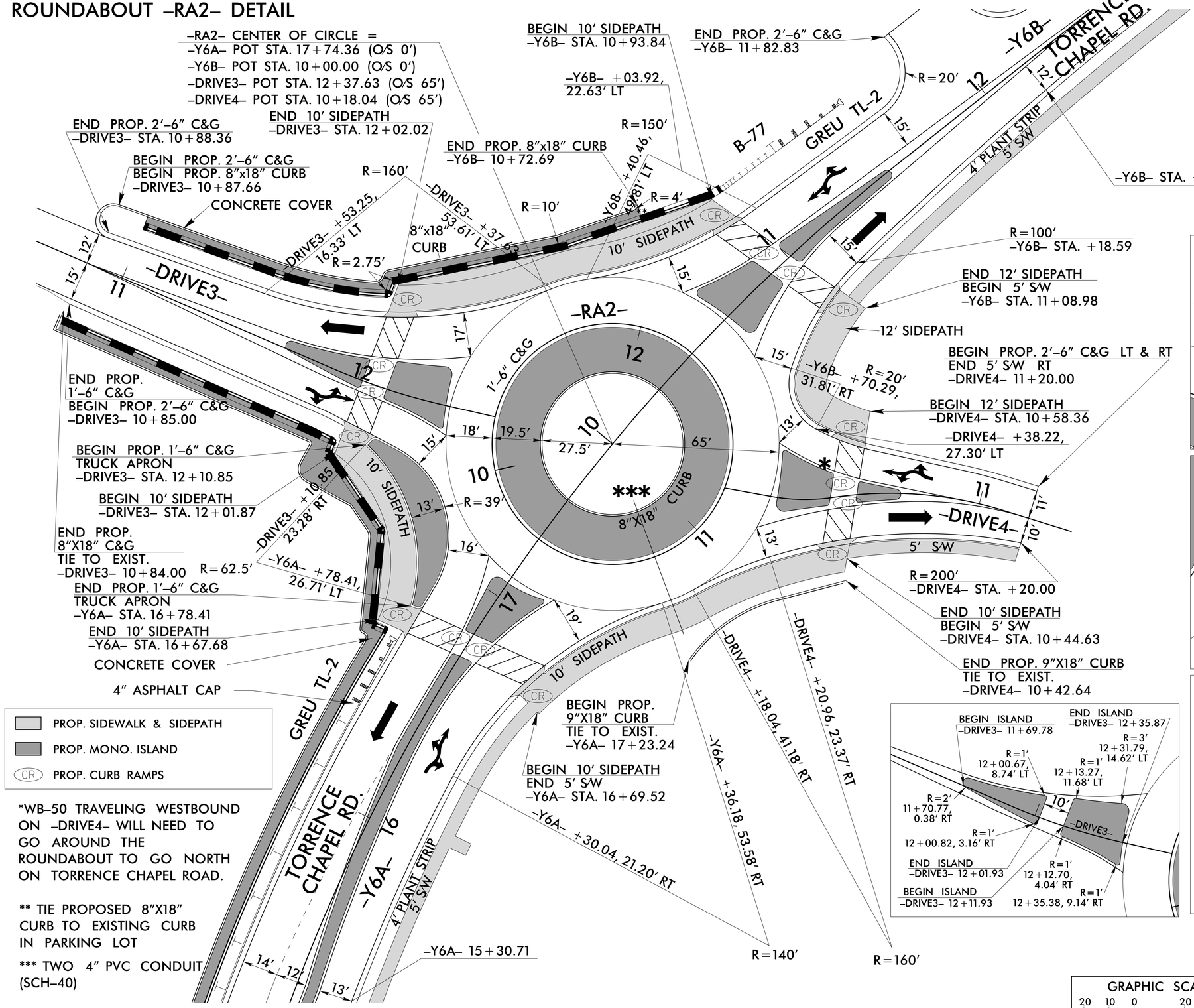

GRAPHIC SCALE
20 10 0 20 40
PLANS

LOCATION: TORRENCE CHAPEL ROAD AND SHOPPING CENTER DRIVEWAY INTERSECTION	
TIP NO.: U–5906	COUNTY: MECKLENBURG
DESIGNED BY: R. MCLEAN, PE	
CHECKED BY: A. DRAKE, PE	DATE: 5/7/2025

6/2/99
IL-SEP-2025 17:27
R:\Roadway\Proj\U5906_Rdy_RA2_detail_2B2.dgn
ladrake

Docusign Envelope ID: 1ECDE3C7-8F10-4ED0-82E1-988B482028F6

6/2/99

ROUNDABOUT –RA3– DETAIL

PROJECT REFERENCE NO.	SHEET NO.
U-5906	2B-3

ROADWAY DESIGN ENGINEER

NORTH CAROLINA PROFESSIONAL SEAL 042257 ENGINEER ALLISON C. DRAKE

9/11/2025

DOCUMENT NOT CONSIDERED FINAL UNLESS ALL SIGNATURES COMPLETED

RS&H 1520 SOUTH BOULEVARD, SUITE 200 CHARLOTTE, NC 28203 NC FIRM LICENSE No: F-0493

NAD 83/NA 2011

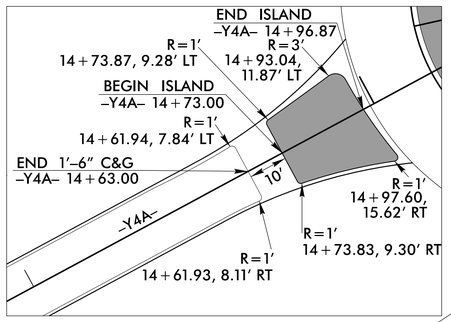

END PROP. 1′–6″ C&G
–DRIVE1– STA. 11+47.75

–DRIVE1– +12.42

R=20′

10′ 10′

–DRIVE1– +03.15

–DRIVE1–

R=5′

12′ 12′

R=5′

11

BEGIN PROP. 1′–6″ C&G
–DRIVE1– STA. 11+38.56

END PROP. 1′–6″ C&G
END PROP. 2′–6″ C&G
–DRIVE1– STA. 11+00.83

R=2′

BEGIN 12′ SIDEPATH
–DRIVE1– STA. 10+54.34

R=4.25′

BEGIN PROP. 1′–6″ C&G
–DRIVE1–
STA. 10+44.90

–DRIVE1– +23.95

R=1′

R=1′

10′

20′

R=112′

–Y4A– +52.21, 26.50′ LT

R=60′

–DRIVE1– +39.72, 20.70′ LT

–Y4A– +95.75, 35.31′ LT

12′ SIDEPATH

18′

–RA3– CENTER OF CIRCLE =
–Y4A– POT STA. 15+63.89 (O/S 0′)
–Y4B– POT STA. 10+00.00 (O/S 0′)
–DRIVE 1– POT STA. 10+18.01 (O/S 65′)
–Y5– POT STA. 10+18.00 (O/S 65′)

BEGIN PROP. 2′–6″ C&G
–Y4B– STA. 12+16.63

END PROP. 2′–6″ C&G
–Y4B– STA. 11+83.63

BEGIN 5′ S/W
–Y4B– STA. 12+21.87

BEGIN 10′ SIDEPATH
–Y4B– STA. 11+75.71

R=115′

–DRIVE1– +82.72, 16.46′ RT

–Y4B– +19.46, 25.50′ LT

END PROP. 2′–6″ C&G
–DRIVE1– STA. 10+62.50

END 10′ SIDEPATH
–DRIVE1– STA. 10+53.00

–DRIVE1– +28.20

–Y4A– +94.78

–Y4B– +70.84

10′ SIDEPATH

R=25′

R=20′

LIVERPOOL PKWY

12

–Y4B–

4′ PLANT STRIP

10′ SIDEPATH

–Y4B– +80.45

BEGIN 10′ SIDEPATH
–Y4B– STA. 11+64.88

BEGIN PROP. 2′–6″ C&G
–Y4B– STA. 11+64.54

END 10′ SIDEPATH
–Y4B– STA. 11+36.13

END PROP. 2′–6″ C&G
–Y4B– STA. 11+37.80

* TWO 4″ PVC CONDUIT (SCH–40)

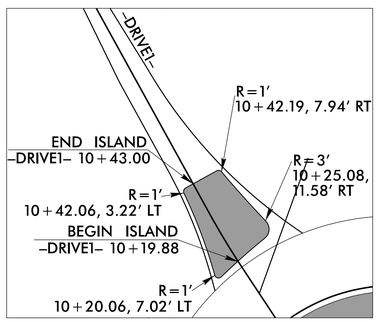

BEGIN 12′ SIDEPATH
END 5′ S/W
–Y4A– STA. 14+62.66

–Y4A– +52.21

BEGIN 5′ S/W
–Y4A– STA. 13+99.20

BEGIN PROP. 2′–6″ C&G
–Y4A– STA. 13+94.43

END PROP. 2′–6″ C&G
–Y4A– STA. 13+71.23

END 5′ S/W
–Y4A– STA. 13+67.84

–Y4A– +50.00

5′ S/W

4′ PLANT STRIP

R=25′

17′

–Y4A–

14

10

15

8″X18″ CURB

11

1′–6″ C&G

R=74′

11.5′

10′ SIDEPATH

–Y4B– +68.48

–Y4B– +90.00, 35.59′ RT

R=113′

17.8′

–Y5– +23.17

–Y5– +43.00, 33.15′ LT

R=99′

R=49′

16.5′

16′

R=112′

10′ SIDEPATH

–Y4A– +95.32

–Y5– +23.05

END PROP. 9″ X 18″ C&G TIE TO EXIST. STA. 10+47.93

–Y4A– +23.42

END PROP. 2′–6″ C&G
BEGIN TRUCK APRON
–Y4A– STA. 14+29.97

BEGIN PROP. 9″ X 18″ C&G
TIE TO EXIST.
–Y4A– STA. 14+47.14

–Y4A– +73.48, 38.16′ RT

–Y5– +40.87, 36.11′ RT

END 10′ SIDEPATH
BEGIN 5′ S/W
–Y5– STA. 10+55.69

BEGIN PROP. 2′–6″ C&G
END TRUCK APRON
–Y5– STA. 10+78.72

R=108′

LIVERPOOL PKWY

13

4′ PLANT STRIP

10′ SIDEPATH

5′ S/W

4′ PLANT STRIP

–Y5–

14′

16′

CHARTWELL CENTER DR

R=32′

END PROP. 1′–6″ C&G
TRUCK APRON
–Y4B– STA. 10+90.00

BEGIN 5′ S/W
END 10′ SIDEPATH
–Y5– STA. 10+43.00

BEGIN PROP. 1′–6″ C&G
TRUCK APRON
–Y5– STA. 10+60.07

END 5′ S/W
–Y5– STA. 11+58.34

END PROP. 2′–6″ C&G
–Y5– STA. 11+69.18

PROP. SIDEWALK & SIDEPATH

PROP. MONO. ISLAND

(CR) PROP. CURB RAMPS

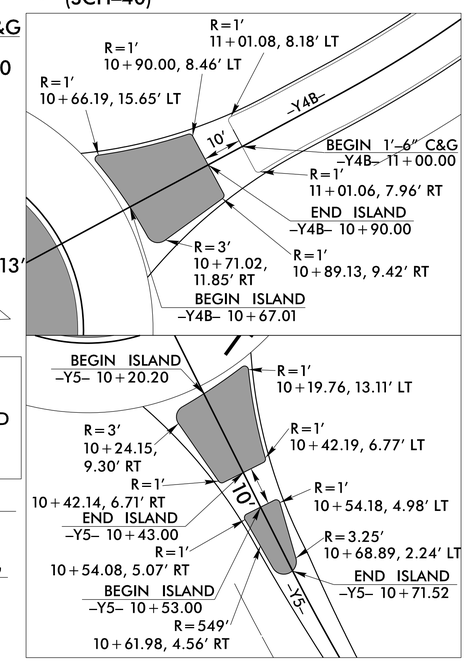

GRAPHIC SCALE
20 10 0 20 40
PLANS

LOCATION: LIVERPOOL PARKWAY AND CHARTWELL CENTER DRIVE INTERSECTION	
TIP NO.: U–5906	COUNTY: MECKLENBURG
DESIGNED BY: R. MCLEAN, PE	
CHECKED BY: A. DRAKE, PE	DATE: 5/7/2025

15-JUL-2025 13:55
R:\Hydraulics\Proj\U5906_Rdy_RA3_detail_2B3.dgn
lxsanbek

Docusign Envelope ID: 1ECDE3C7-8F10-4ED0-82E1-988B482028F6

6/2/99

INTERSECTION DETAIL

PROJECT REFERENCE NO.	SHEET NO.
U-5906	2B-4

ROADWAY DESIGN ENGINEER

NORTH CAROLINA PROFESSIONAL SEAL 042257 ENGINEER ALLISON C. DRAKE

9/11/2025

DOCUMENT NOT CONSIDERED FINAL UNLESS ALL SIGNATURES COMPLETED

RS&H 1520 SOUTH BOULEVARD, SUITE 200 CHARLOTTE, NC 28203 NC FIRM LICENSE No: F-0493

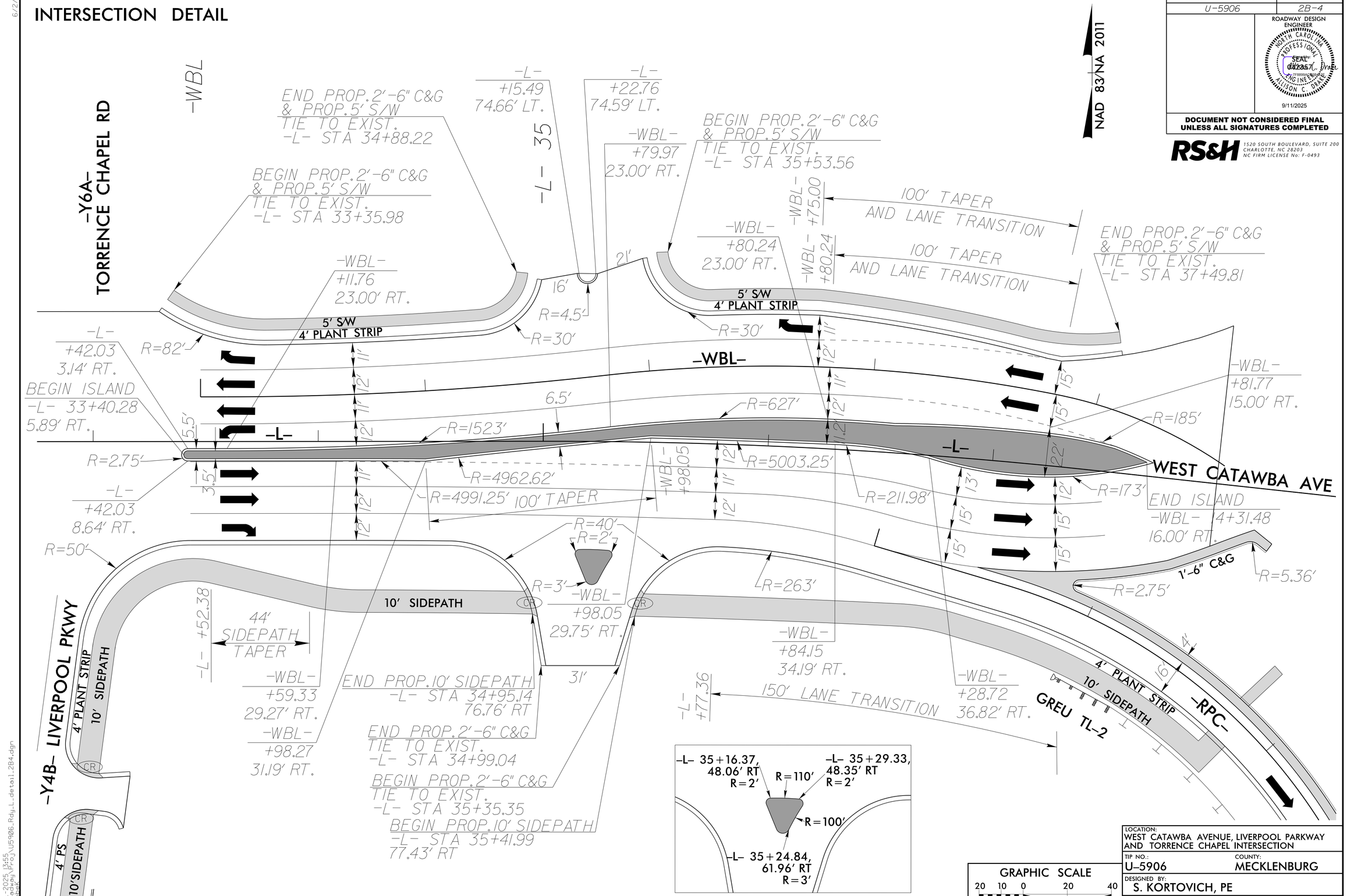

LOCATION: WEST CATAWBA AVENUE, LIVERPOOL PARKWAY AND TORRENCE CHAPEL INTERSECTION

TIP NO.: U-5906 COUNTY: MECKLENBURG

DESIGNED BY: S. KORTOVICH, PE

CHECKED BY: A. DRAKE, PE DATE: 11/1/2019

15-JUL-2025 13:55
R:\Roadway\Proj\U5906_Rdy_L_detail_2B4.dgn
lixenbak

Docusign Envelope ID: 1ECDE3C7-8F10-4ED0-82E1-988B482028F6

PROJECT REFERENCE NO.	SHEET NO.
U-5906	2B-5

ROADWAY DESIGN ENGINEER

NORTH CAROLINA PROFESSIONAL SEAL 042367 ENGINEER ALLISON C. DRAKE

DocuSigned by: Allison Drake

9/11/2025

DOCUMENT NOT CONSIDERED FINAL UNLESS ALL SIGNATURES COMPLETED

RS&H 1520 SOUTH BOULEVARD, SUITE 200 CHARLOTTE, NC 28203 NC FIRM LICENSE No: F-0493

NAD 83/NA 2011

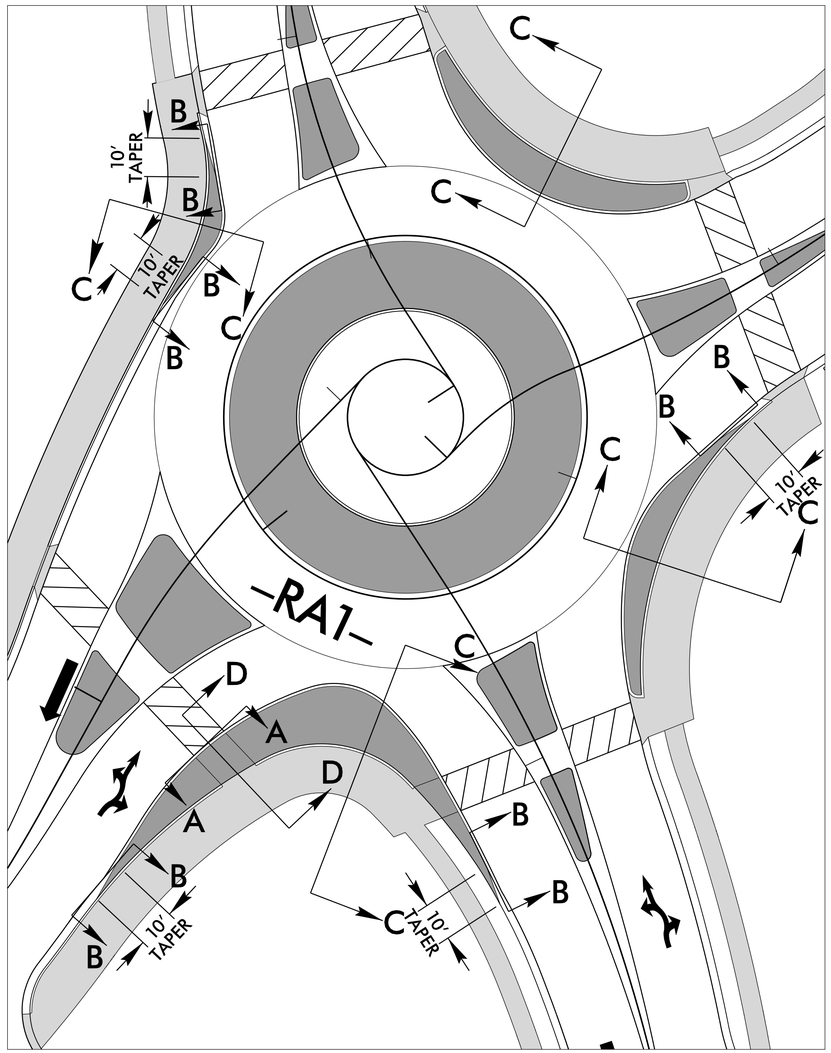

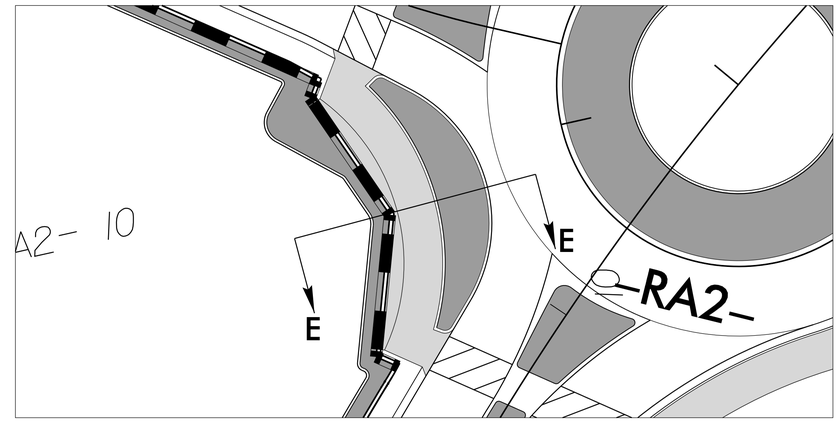

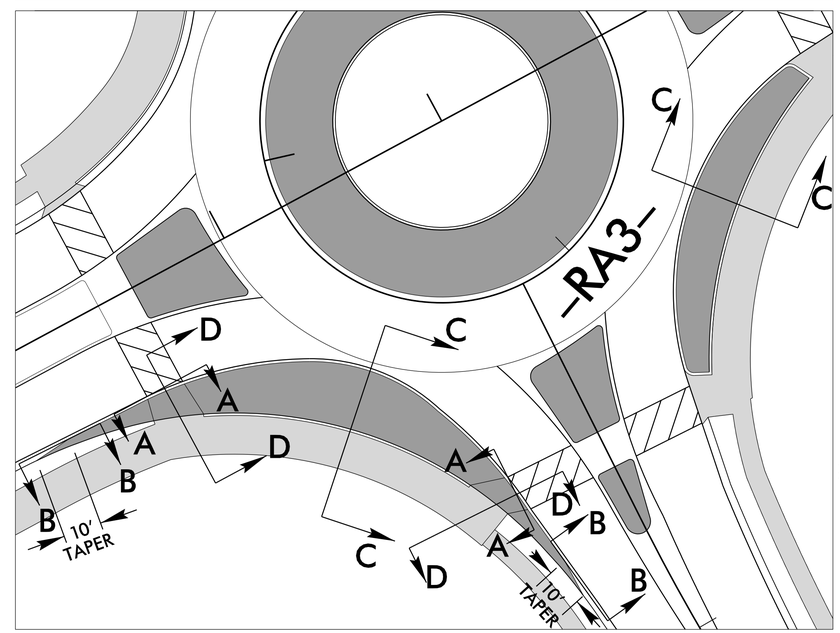

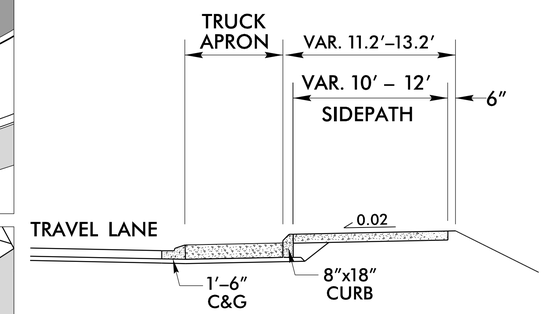

SECTION C–C

VIEW LOOKING DOWN TRAVEL LANE

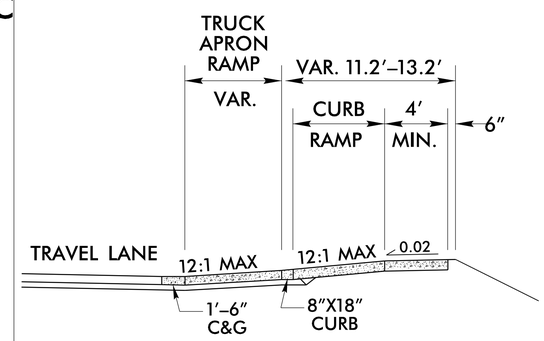

SECTION D–D

VIEW LOOKING DOWN TRAVEL LANE

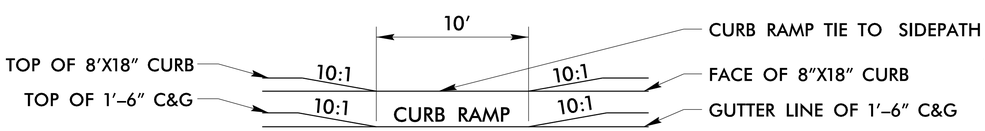

SECTION A–A

VIEW LOOKING NORMAL TO CURB RAMP

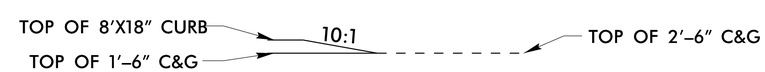

SECTION B–B

VIEW LOOKING NORMAL TO CURB RAMP

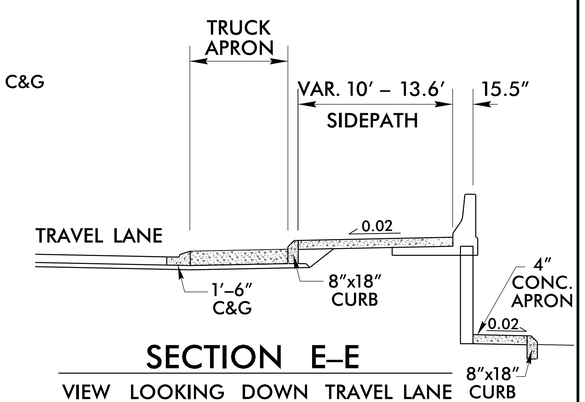

SECTION E–E

VIEW LOOKING DOWN TRAVEL LANE

OUTSIDE TRUCK APRON AND CURB RAMP DETAILS AT –RA1–, –RA2– , & –RA3–

6/2/99
15-JUL-2025 13:56
R:\Roadway\Proj\U5906_Rdy_RA_TruckApron_detail_285.dgn
lusebak

Docusign Envelope ID: 1ECDE3C7-8F10-4ED0-82E1-988B482028F6

6/2/99

SHEAR POINT DIAGRAM –RA1–

PROJECT REFERENCE NO.	SHEET NO.
U-5906	2B-6

ROADWAY DESIGN ENGINEER

NORTH CAROLINA PROFESSIONAL SEAL 042357 ENGINEER ALISON C. DRAKE

Signed by: Alison C. Drake
PE-F-0493/C-0832/S-0

9/11/2025

DOCUMENT NOT CONSIDERED FINAL UNLESS ALL SIGNATURES COMPLETED

RS&H
1520 SOUTH BOULEVARD, SUITE 200
CHARLOTTE, NC 28203
NC FIRM LICENSE No: F-0493

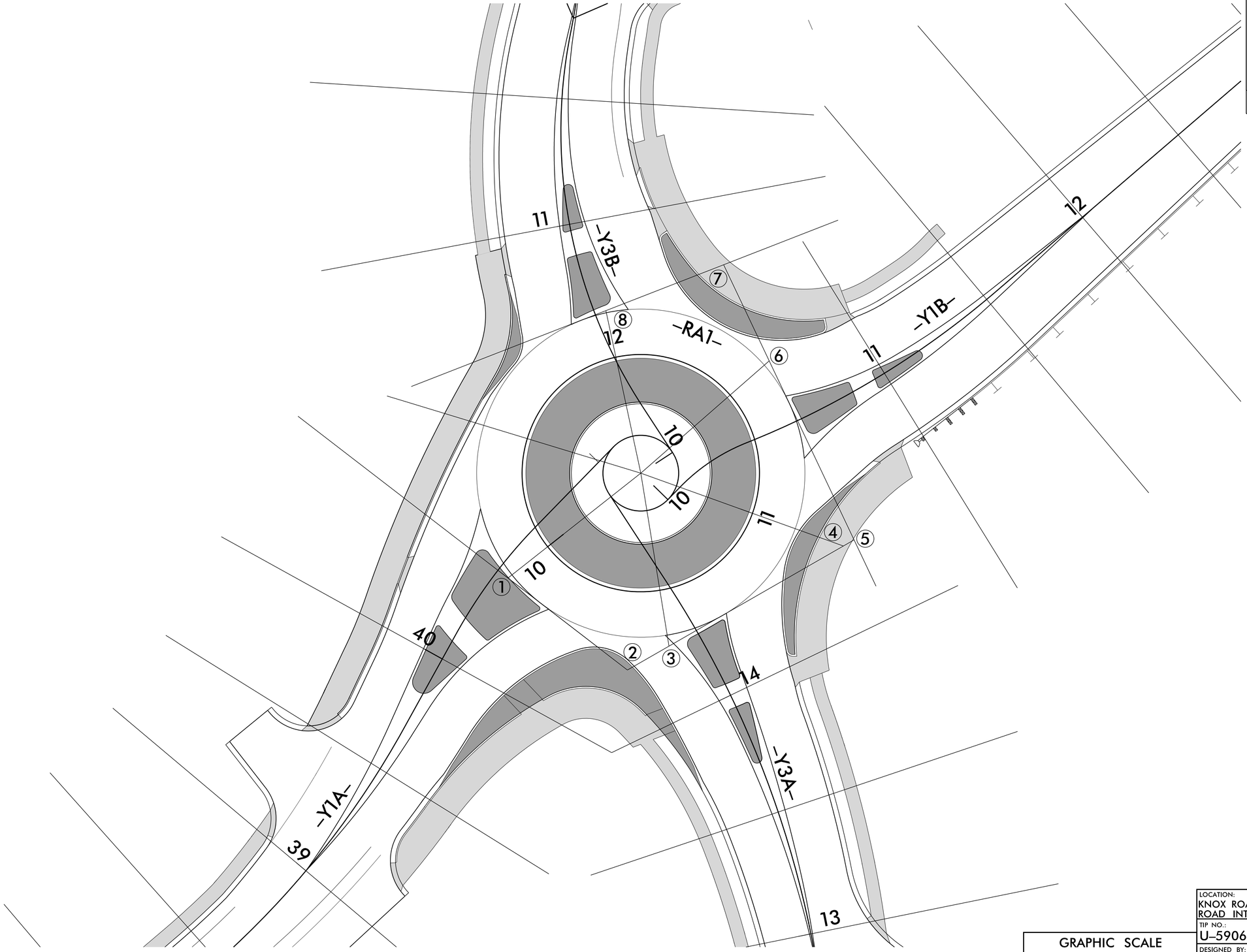

GRAPHIC SCALE
20 10 0 20 40
PLANS

LOCATION: KNOX ROAD AND TORRENCE CHAPEL ROAD INTERSECTION	
TIP NO.: U–5906	COUNTY: MECKLENBURG
DESIGNED BY: R. MCLEAN, PE	
CHECKED BY: A. DRAKE, PE	DATE: 5/7/2025

15-JUL-2025 13:56
R:\Roadway\Proj\U5906_Rdy_RA1_shear_2B6.dgn
lxsehbx

Docusign Envelope ID: 1ECDE3C7-8F10-4ED0-82E1-988B482028F6

6/2/99

SHEAR POINT DIAGRAM –RA2–

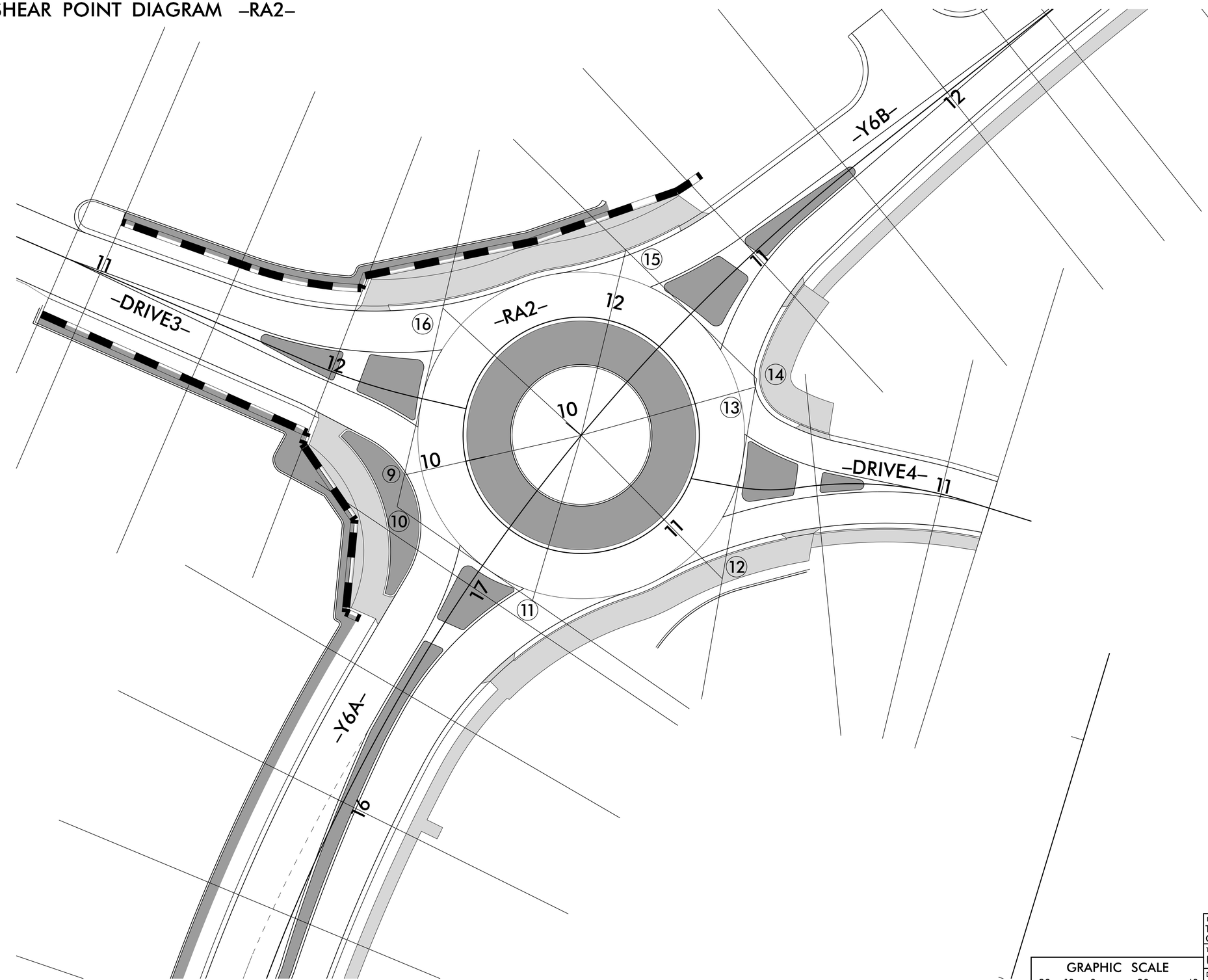

NAD 83/NA 2011

PROJECT REFERENCE NO.	SHEET NO.
U-5906	2B-7

ROADWAY DESIGN ENGINEER

NORTH CAROLINA PROFESSIONAL SEAL 042057 ENGINEER ALLISON C. DRAKE

Signed by: DocuSigned by: 7F8B9AAC4C0E4A...

9/11/2025

DOCUMENT NOT CONSIDERED FINAL UNLESS ALL SIGNATURES COMPLETED

RS&H 1520 SOUTH BOULEVARD, SUITE 200 CHARLOTTE, NC 28203 NC FIRM LICENSE No: F-0493

GRAPHIC SCALE

20 10 0 20 40

PLANS

LOCATION:
TORRENCE CHAPEL ROAD AND SHOPPING CENTER DRIVEWAY INTERSECTION

TIP NO.: U–5906

COUNTY: MECKLENBURG

DESIGNED BY: R. MCLEAN, PE

CHECKED BY: A. DRAKE, PE

DATE: 5/7/2025

15-JUL-2025 13:56
R:\Roadway\Proj\U5906_Rdy_RA2_shear_287.dgn
lxsanchek

Docusign Envelope ID: 1ECDE3C7-8F10-4ED0-82E1-988B482028F6

SHEAR POINT DIAGRAM –RA3–

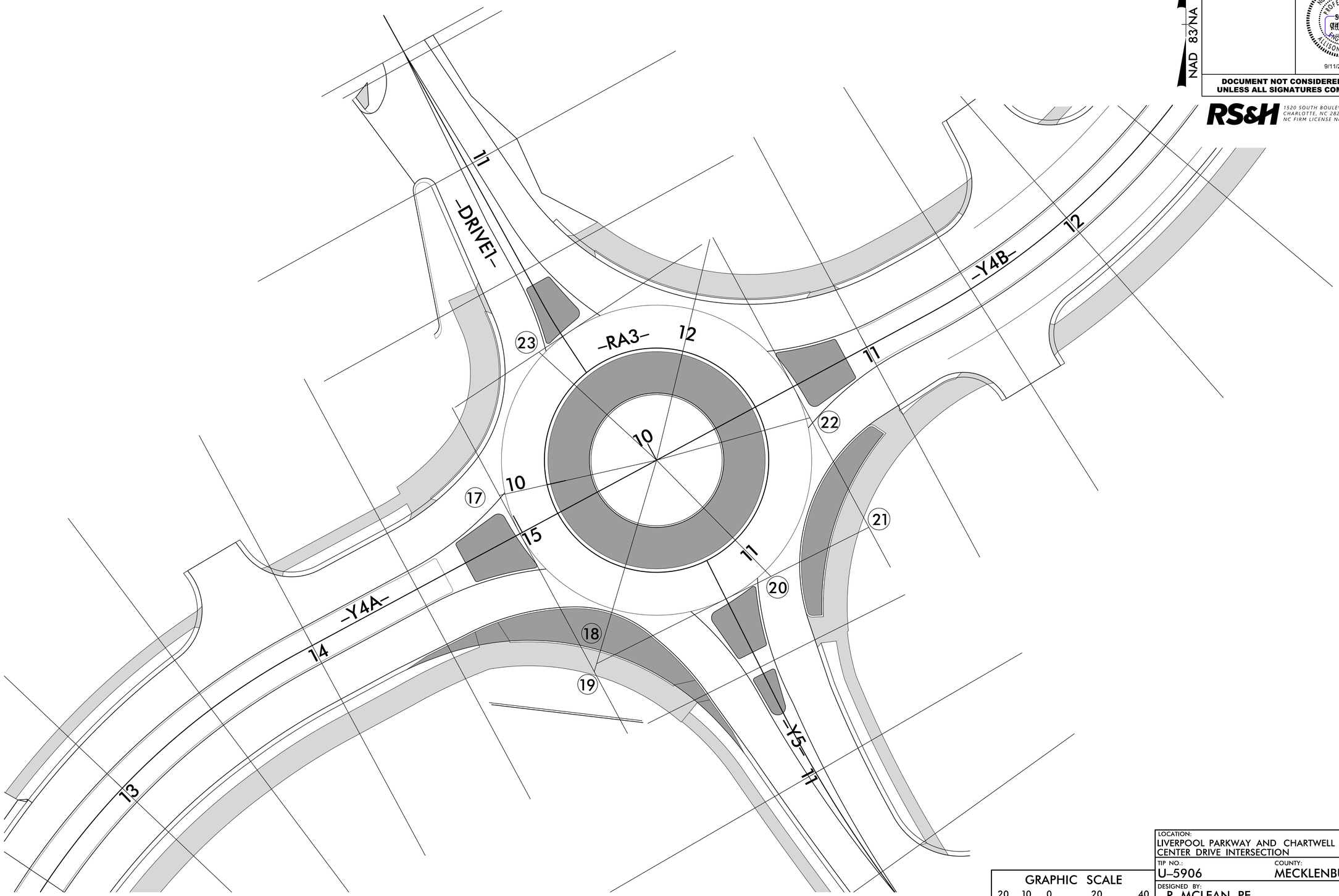

PROJECT REFERENCE NO.	SHEET NO.
U-5906	2B-8

ROADWAY DESIGN ENGINEER

NORTH CAROLINA PROFESSIONAL SEAL 042257 ENGINEER ALLISON C. DRAKE

9/11/2025

NAD 83/NA 2011

DOCUMENT NOT CONSIDERED FINAL UNLESS ALL SIGNATURES COMPLETED

RS&H 1520 SOUTH BOULEVARD, SUITE 200 CHARLOTTE, NC 28203 NC FIRM LICENSE No: F-0493

GRAPHIC SCALE
20 10 0 20 40
PLANS

LOCATION:
LIVERPOOL PARKWAY AND CHARTWELL CENTER DRIVE INTERSECTION

TIP NO.: U–5906
COUNTY: MECKLENBURG

DESIGNED BY: R. MCLEAN, PE

CHECKED BY: A. DRAKE, PE
DATE: 5/7/2025

6/2/99

15-JUL-2025 13:56
R:\Roadway\Proj\U5906_Rdy_RA3_shear_2B8.dgn
lxerhak

Docusign Envelope ID: 1ECDE3C7-8F10-4ED0-82E1-988B482028F6

TEMPORARY SIDEWALK DETAIL SHEET

PROJECT REFERENCE NO.	SHEET NO.
U-5906	2B-9

ROADWAY DESIGN ENGINEER

NORTH CAROLINA PROFESSIONAL SEAL 042267 ENGINEER ALLISON C. DRAKE

9/11/2025

DOCUMENT NOT CONSIDERED FINAL UNLESS ALL SIGNATURES COMPLETED

RS&H 1520 SOUTH BOULEVARD, SUITE 200 CHARLOTTE, NC 28203 NC FIRM LICENSE No: F-0493

NAD 83/NA 2011

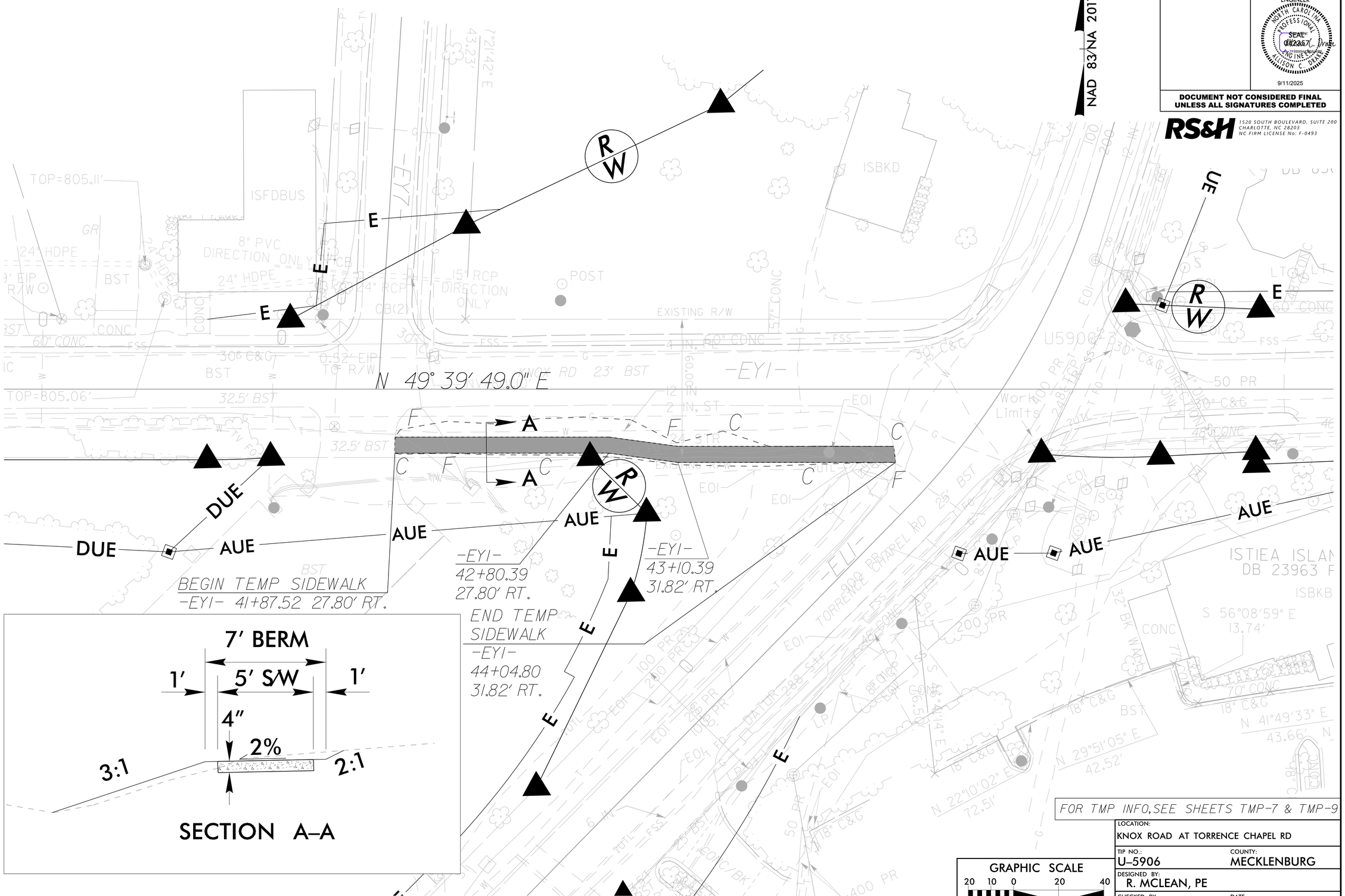

LOCATION: KNOX ROAD AT TORRENCE CHAPEL RD	
TIP NO.: U-5906	COUNTY: MECKLENBURG
DESIGNED BY: R. MCLEAN, PE	
CHECKED BY: A. DRAKE, PE	DATE: 5/7/2025

15-JUL-2025 13:56
R:\Hydraulics\Roadway\U-5906_Rdy_YIA_Temp SW Detail 2B-9.dgn
$$$$USERNAME$$$$
$$$$SCALE$$$$

Docusign Envelope ID: E8D21726-FD90-4485-A653-CD3F9D6D3375

8/17/99

RETAINING WALL –RW2– DETAIL

PROJECT REFERENCE NO.	SHEET NO.
U-5906	2B-10

ROADWAY DESIGN ENGINEER

SEAL 042337 ENGINEER ALLISON C. DRAKE

Signed by: Allison Drake
DocuSign Envelope ID: 9ACE384A2B

9/26/2025

DOCUMENT NOT CONSIDERED FINAL UNLESS ALL SIGNATURES COMPLETED

RS&H
NC FIRM LICENSE No: F-0493

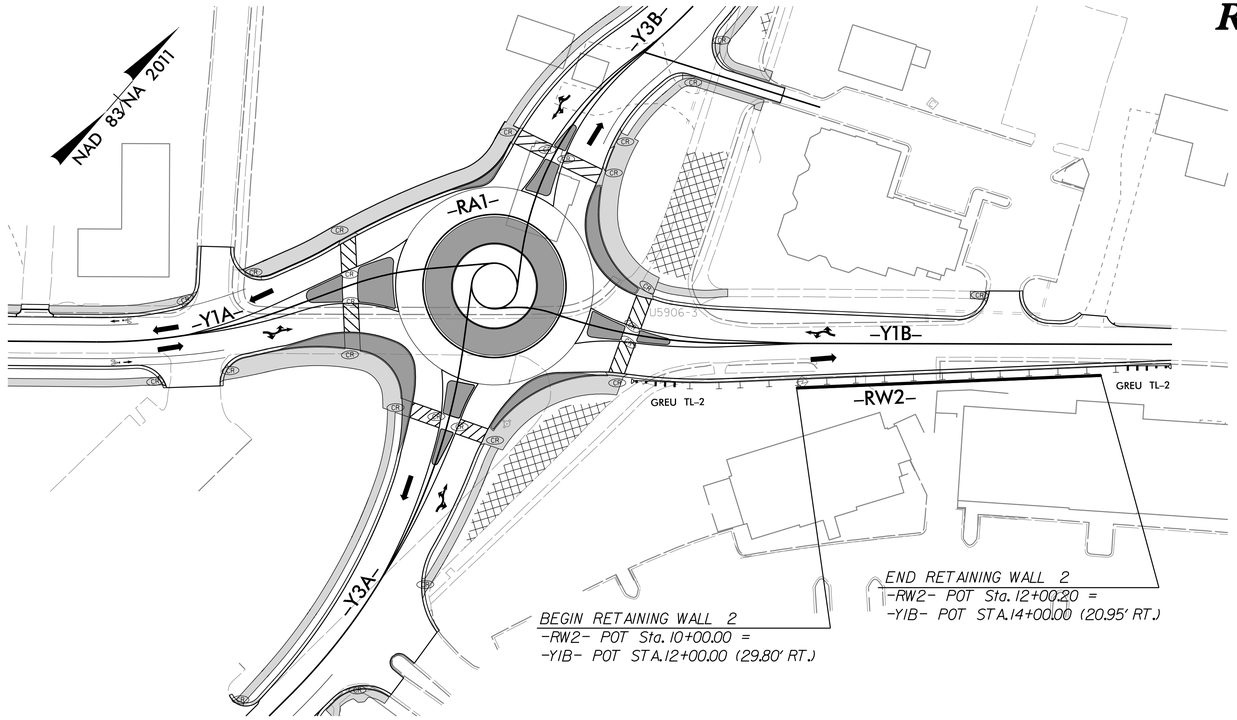

PAVEMENT SCHEDULE			
C1	1.5" S9.5C	R1	2'-6" C&G
C2	3" S9.5C	T	EARTH MATERIAL.
D1	4" I19.0C	U	EXISTING PAVEMENT.
E1	4" B25.0C	W	WEDGING

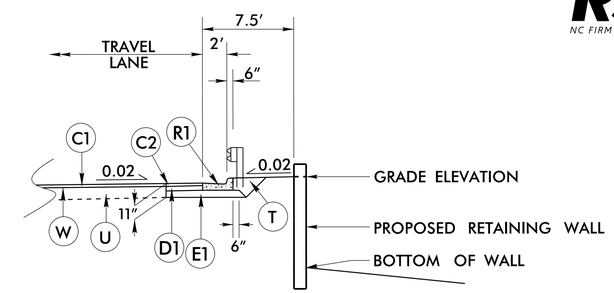

SECTION THROUGH RETAINING WALL
–RW2– STA. 10+00.00 TO –RW2– STA. 12+00.20

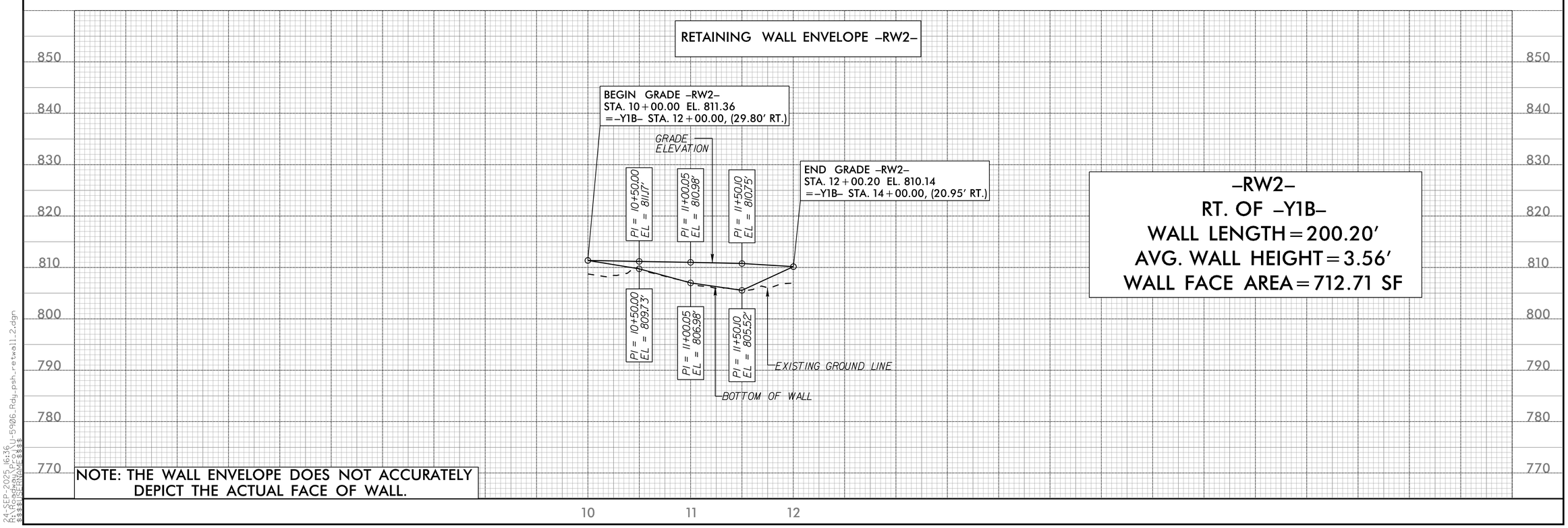

–RW2–
RT. OF –Y1B–
WALL LENGTH = 200.20'
AVG. WALL HEIGHT = 3.56'
WALL FACE AREA = 712.71 SF

NOTE: THE WALL ENVELOPE DOES NOT ACCURATELY DEPICT THE ACTUAL FACE OF WALL.

24-SEP-2025 16:36
R:\Roadway\Proj\U-5906_Rdy_psh_retwall_2.dgn
$$$$USERNAME$$$$

Docusign Envelope ID: 1ECDE3C7-8F10-4ED0-82E1-988B482028F6

8/17/99

TEMPORARY DRIVEWAY DETAIL

PROJECT REFERENCE NO.	SHEET NO.
U-5906	2B-11
R/W SHEET NO.	
ROADWAY DESIGN ENGINEER	HYDRAULICS ENGINEER
9/11/2025	9/15/2025

DOCUMENT NOT CONSIDERED FINAL UNLESS ALL SIGNATURES COMPLETED

RS&H
NC FIRM LICENSE No: F-0493

NAD 83/NA 2011

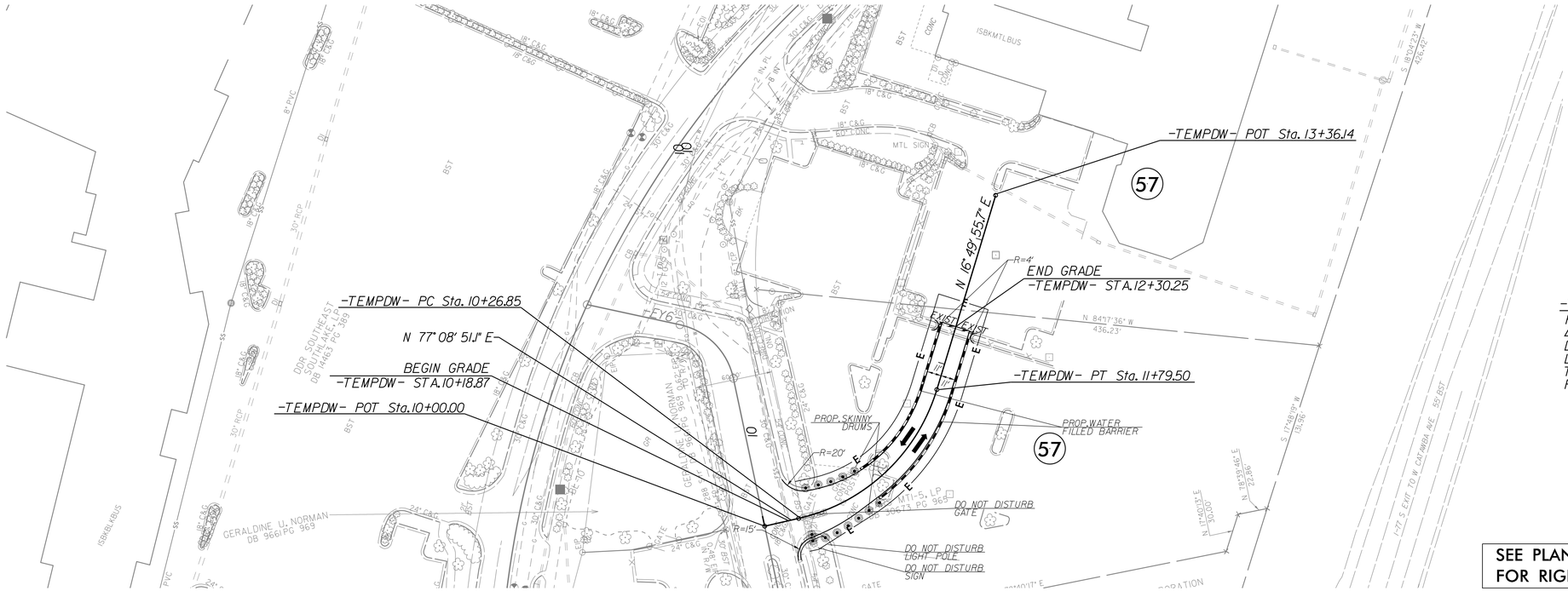

-TEMPDW- CURVE DATA

PI Sta 11+11.10
Δ = 60° 18' 55.4" (LT)
D = 39° 30' 51.6"
L = 152.64'
T = 84.25'
R = 145.00'

NOTE: CONTRACTOR TO NOT DISTURB EXISTING LIGHTING OR CURB AND GUTTER WITHIN EASEMENT.

PROP. WATER FILLED BARRIER

GRAPHIC SCALE
20 10 0 20 40
PLANS

SEE PLAN SHEETS RW-8 AND RW-9 FOR RIGHT OF WAY INFORMATION

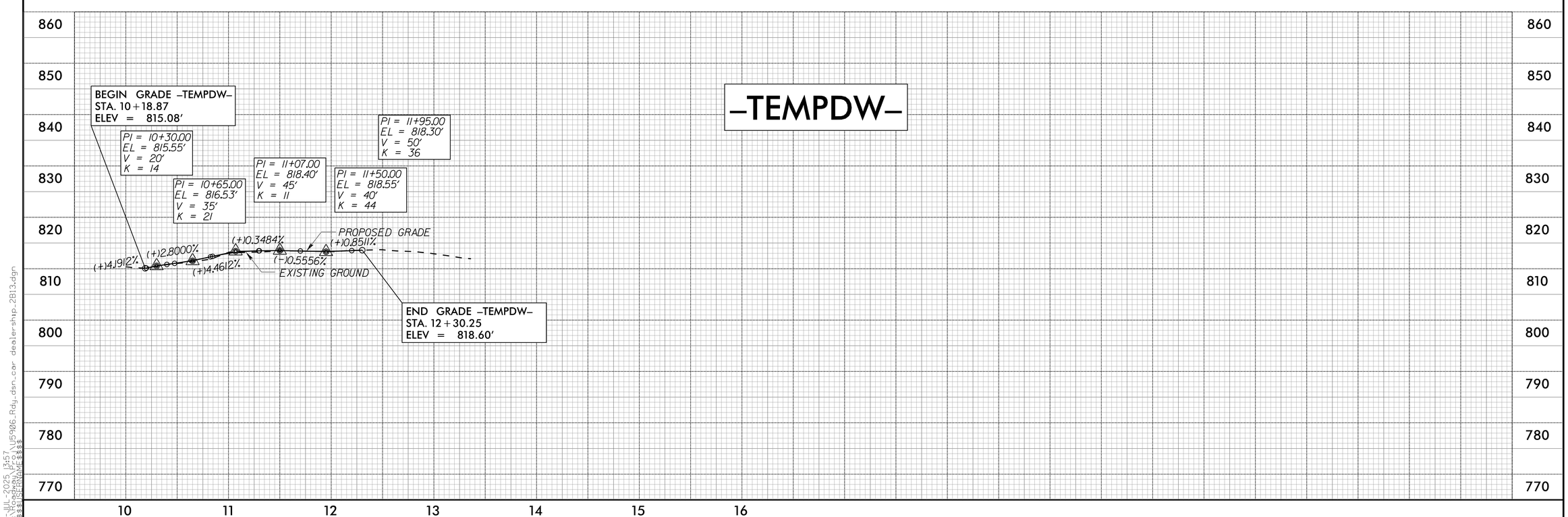

15-JUL-2025 13:57
R:\Roadway\Proj\U5906_Rdy_dsn_cor dealership_2B13.dgn
$$$$USERNAME$$$$

Docusign Envelope ID: 1ECDE3C7-8F10-4ED0-82E1-988B482028F6

PROJECT REFERENCE NO.	SHEET NO.
U-5906	2C-1

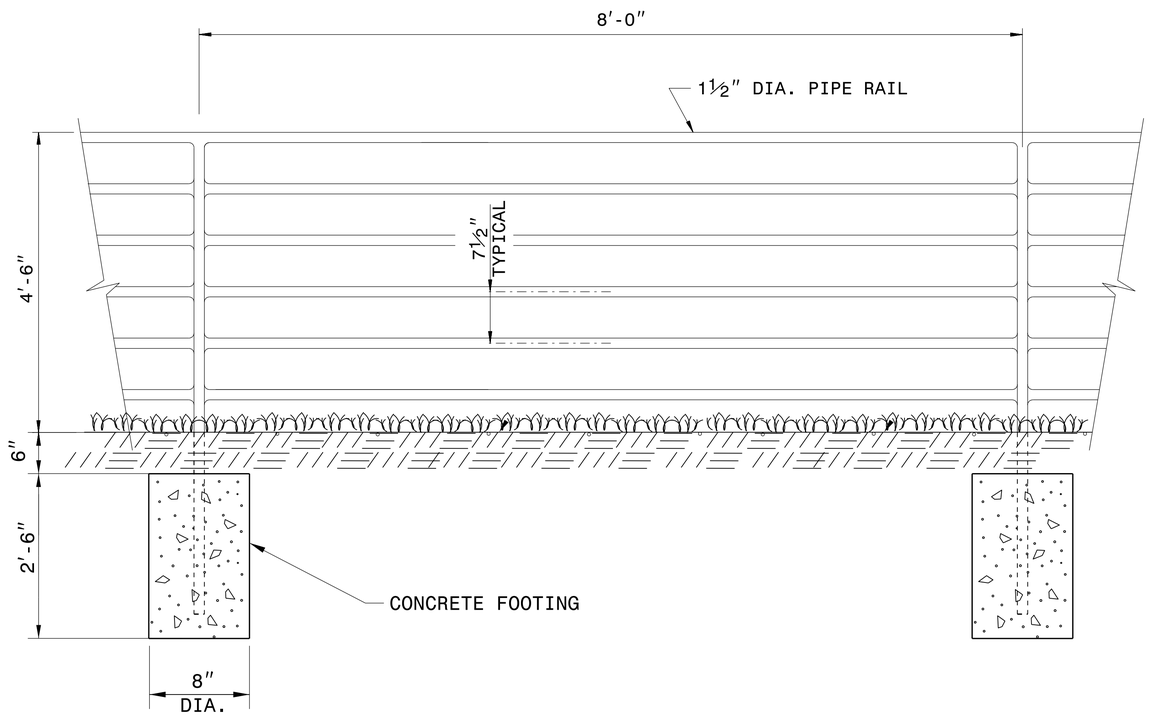

ELEVATION OF HANDRAIL

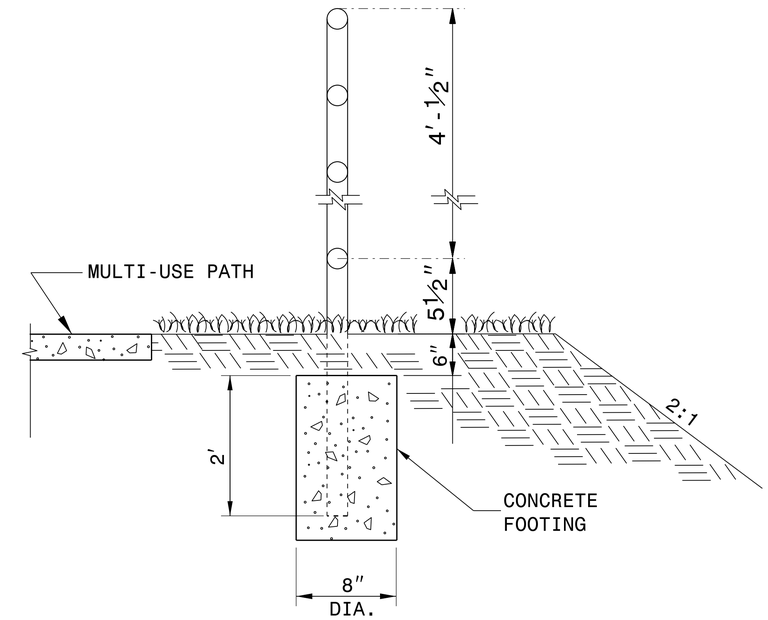

INSET 'A'

NOTES:

CONSTRUCT PROPOSED STEEL PIPE RAIL OF 1½" DIAMETER SCHEDULE 40 PLAIN END GALVANIZED STEEL PIPE MEETING THE REQUIREMENTS OF ASTM A53.

REPAIR GALVANIZING IN ACCORDANCE WITH SECTION 1076 OF THE NCDOT STANDARD SPECIFICATIONS.

PAINT, IF REQUIRED BY THE ENGINEER, IN ACCORDANCE WITH SECTION 1080 OF THE STANDARD SPECIFICATIONS.

WELD IN ACCORDANCE WITH ARTICLE 1072-18 OF THE STANDARD SPECIFICATIONS.

USE CLASS 'B' CONCRETE FOR HANDRAIL FOOTINGS.

PLACEMENT OF HANDRAIL IN RELATION TO SHOULDER BREAK POINT AND PATH MAY BE MODIFIED AS DIRECTED BY THE ENGINEER.

NORTH CAROLINA PROFESSIONAL SEAL 33144 ENGINEER
DOCUSIGNED BY: NICOLE M. ALLEN
5B843203034164C8...

DOCUMENT NOT CONSIDERED FINAL UNLESS ALL SIGNATURES COMPLETED

CONTRACT STANDARDS AND DEVELOPMENT UNIT
Office 919-707-6950 FAX 919-250-4119

PROPOSED BIKE/PED SAFETY RAIL

ORIGINAL BY: E.E. WARD DATE: 12-99
MODIFIED BY: DATE:
CHECKED BY: DATE:
FILE SPEC.: jhowerton/handrail adjacent to sidewalk.dgn

25-JAN-2018 07:30
S:\Contracts\Contracts\Special Details\jhowerton\Handrail Adjacent to Sidewalk.dgn
jhowerton AT CSD-292595

Docusign Envelope ID: 4C8CC55A-45D9-49D1-9885-01377E2F2E5C

PROJECT REFERENCE NO.	SHEET NO.
U-5906	2C-2

PLACE APPROVED BICYCLE FRIENDLY RAILINGS, FENCE, OR RUB RAILS IF SIDEPATH/SHARED-USE PATH IS LOCATED LESS THAN 4 FEET FROM THE POST

SEE THE ROADWAY DESIGN MANUAL (PART I CHAPTER 4 SECTION 4.14) FOR OFFSET DISTANCES FROM FACE OF GUARDRAIL AND BACK OF GUARDRAIL TO SIDEWALK OR SIDEPATH/SHARED-USE PATH

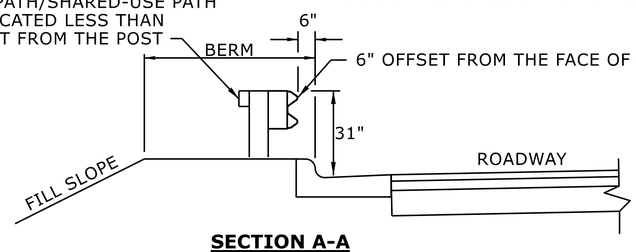

SECTION A-A

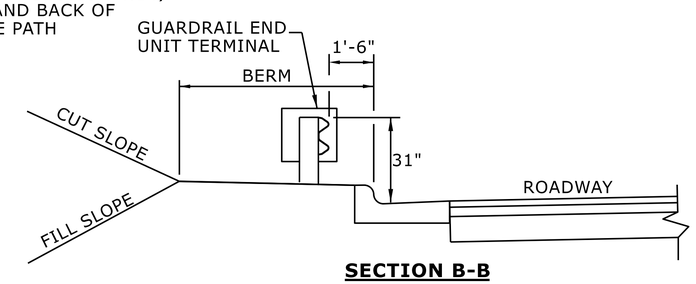

SECTION B-B

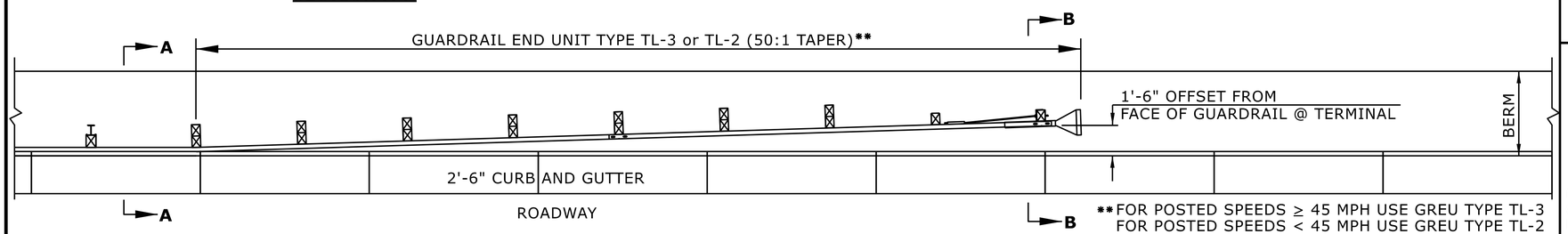

GUARDRAIL 6" FROM THE FACE OF CURB

** FOR POSTED SPEEDS ≥ 45 MPH USE GREU TYPE TL-3
FOR POSTED SPEEDS < 45 MPH USE GREU TYPE TL-2

BICYCLE FRIENDLY RAILINGS, FENCE OR RUB RAIL SHOULD NOT BE PLACED WITHIN THE LIMITS OF THE STRUCTURAL ANCHOR OR END UNITS

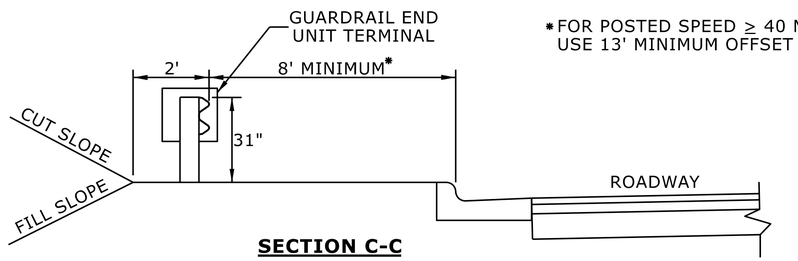

SECTION C-C

* FOR POSTED SPEED ≥ 40 MPH USE 13' MINIMUM OFFSET

SEE THE ROADWAY DESIGN MANUAL (PART I CHAPTER 4 SECTION 4.14) FOR OFFSET DISTANCES FROM FACE OF GUARDRAIL AND BACK OF GUARDRAIL TO SIDEWALK OR SIDEPATH/SHARED-USE PATH

** FOR POSTED SPEEDS ≥ 45 MPH USE GREU TYPE TL-3
FOR POSTED SPEEDS < 45 MPH USE GREU TYPE TL-2

BICYCLE FRIENDLY RAILINGS, FENCE OR RUB RAIL SHOULD NOT BE PLACED WITHIN THE LIMITS OF THE STRUCTURAL ANCHOR OR END UNITS

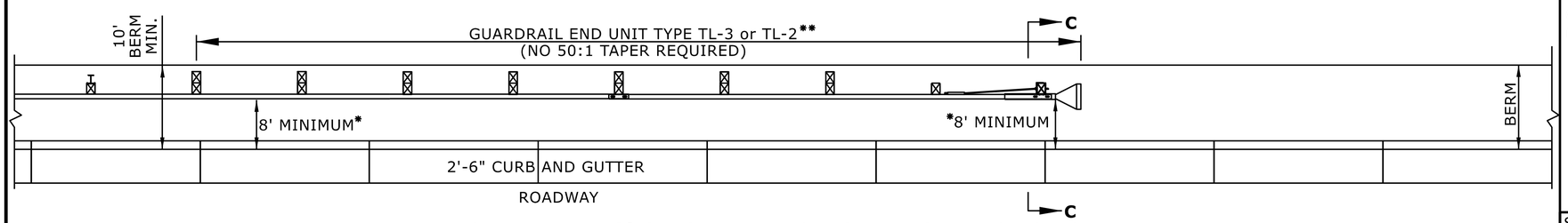

GUARDRAIL 8' OR GREATER OFFSET FROM FACE OF CURB

STATE OF
NORTH CAROLINA
DEPT. OF TRANSPORTATION
DIVISION OF HIGHWAYS
RALEIGH, N.C.

ROADWAY DETAIL DRAWING FOR
GUARDRAIL PLACEMENT
GUARDRAIL TREATMENT AT CURB AND GUTTER

SHEET 12 OF 15

862D01

NORTH CAROLINA PROFESSIONAL SEAL 033144 ENGINEER NICOLE M. HACKLER

8/7/2025

DOCUMENT NOT CONSIDERED FINAL UNLESS ALL SIGNATURES COMPLETED

CONTRACTS STANDARDS AND DEVELOPMENT UNIT
Office 919-707-6950 FAX 919-250-4119

SEE TITLE BLOCK

ORIGINAL BY: S.CALHOUN DATE: 7-25-2024
MODIFIED BY: DATE:
CHECKED BY: DATE:
FILE SPEC.:

Docusign Envelope ID: 4C8CC55A-45D9-49D1-9885-01377E2F2E5C

PROJECT REFERENCE NO.	SHEET NO.
U-5906	2C-3

NOTES:

CONSTRUCT STANDARD SIDEWALK 5' WIDE AND 4" THICK UNLESS OTHERWISE DENOTED ON PLANS.

PLACE A GROOVE JOINT 1" DEEP WITH ⅛" RADII IN THE CONCRETE SIDEWALK AT 5' INTERVALS. ONE ½" EXPANSION JOINT WILL BE REQUIRED AT 50' INTERVALS. A ½" EXPANSION JOINT WILL BE REQUIRED WHERE THE SIDEWALK JOINS ANY RIGID STRUCTURE.

SEE STD. DWG. 848.06 FOR CURB RAMP LOCATION REQUIREMENTS AND CONSTRUCTION GUIDELINES.

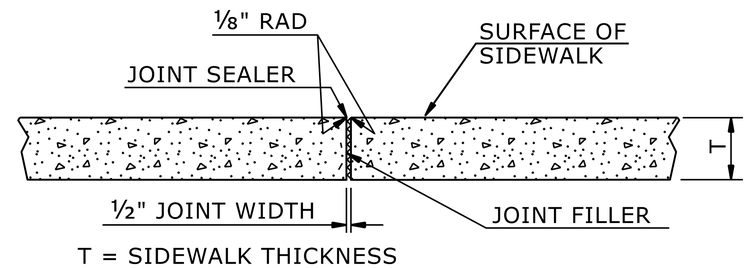

TRANSVERSE EXPANSION JOINT IN SIDEWALK

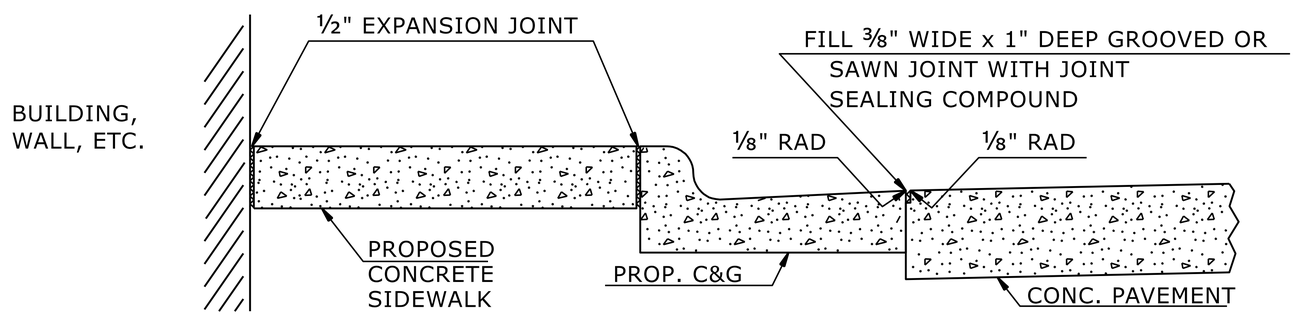

DETAILS SHOWING JOINTS IN CONCRETE SIDEWALK

STATE OF NORTH CAROLINA
DEPT. OF TRANSPORTATION
DIVISION OF HIGHWAYS
RALEIGH, N.C.

ROADWAY DETAIL DRAWING FOR
CONCRETE SIDEWALK

SEAL 033144
NORTH CAROLINA PROFESSIONAL ENGINEER
WOLF M. HACKER
DocuSigned by: Wolf Hacker
C3B1B4C5...
8/7/2025

SHEET 1 OF 1

848D01

DOCUMENT NOT CONSIDERED FINAL UNLESS ALL SIGNATURES COMPLETED

CONTRACTS STANDARDS AND DEVELOPMENT UNIT
Office 919-707-6950 FAX 919-250-4119

SEE TITLE BLOCK

ORIGINAL BY: S.CALHOUN DATE: 7-25-2024
MODIFIED BY: DATE:
CHECKED BY: DATE:
FILE SPEC.:

Docusign Envelope ID: 4C8CC55A-45D9-49D1-9885-01377E2F2E5C

PROJECT REFERENCE NO.	SHEET NO.
U-5906	2C-4

★ - *WHERE CLEAR SPACE IS CONSTRAINED ON TWO OR MORE SIDES, THE CLEAR SPACE SHALL BE 4' MINIMUM X 5' MINIMUM, WITH 5' PROVIDED IN THE DIRECTION OF THE PEDESTRIAN STREET CROSSING.*

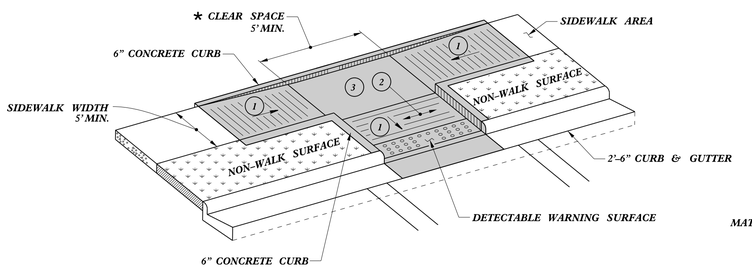

TYPE 3

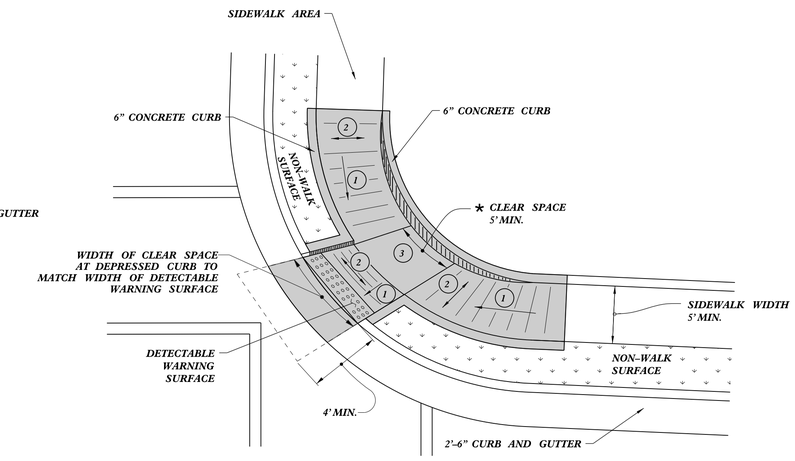

TYPE 3 MODIFIED
INSTALLATION IN A RADIUS

NOTES:
DETECTABLE WARNING SURFACE SHALL COVER 2'-0" LENGTH AND FULL WIDTH OF THE RAMP FLOOR AS SHOWN ON THE DETAILS.

DETECTABLE WARNING SURFACE SHALL CONTRAST VISIBLY WITH ADJOINING SURFACE, EITHER LIGHT-ON-DARK, OR DARK-ON-LIGHT SEQUENCE COVERING THE ENTIRE RAMP.

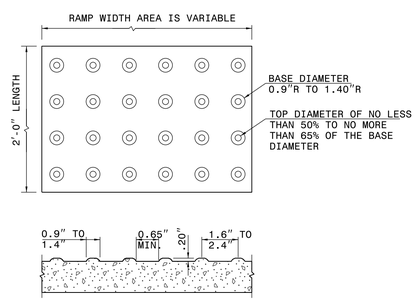

DETECTABLE WARNING SURFACE

1. *8.33% (12:1) MAX RAMP SLOPE*
2. *CROSS SLOPE: 2.00%*
3. *MAXIMUM CROSS SLOPE AND LONGITUDINAL SLOPE OF 2.00%.*

PAY LIMITS FOR 1 CURB RAMP

STATE OF
NORTH CAROLINA
DEPT. OF TRANSPORTATION
DIVISION OF HIGHWAYS
RALEIGH, N.C.

ROADWAY DETAIL DRAWING FOR
CURB RAMP
PARALLEL RAMP

NORTH CAROLINA PROFESSIONAL SEAL 039144 ENGINEER NICOLE M. HACKLER
DocuSigned by: 8/7/2025

SHEET 9 OF13

848D06

DOCUMENT NOT CONSIDERED FINAL UNLESS ALL SIGNATURES COMPLETED

CONTRACTS STANDARDS AND DEVELOPMENT UNIT
Office 919-707-6950 FAX 919-250-4119

SEE TITLE BLOCK

ORIGINAL BY: S.CALHOUN DATE: 12-22-2023
MODIFIED BY: DATE:
CHECKED BY: DATE:
FILE SPEC.: special details\nmhackler\D0609.dgn

Docusign Envelope ID: 4C8CC55A-45D9-49D1-9885-01377E2F2E5C

PROJECT REFERENCE NO.	SHEET NO.
U-5906	2C-5

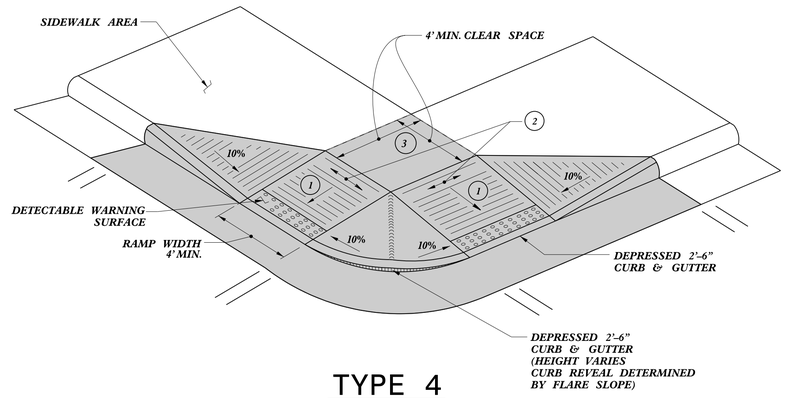

TYPE 4

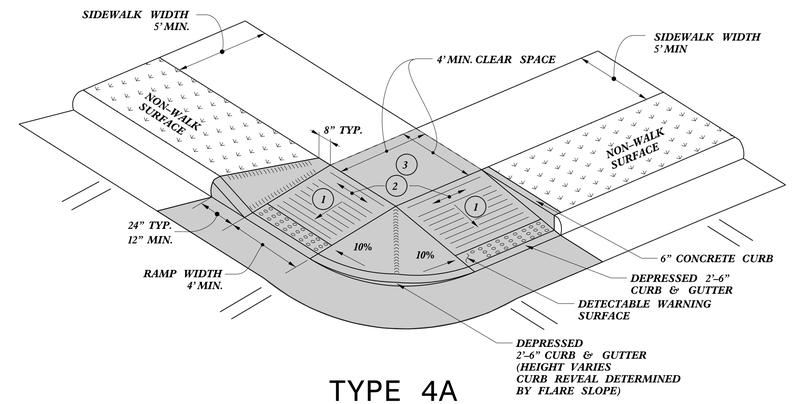

TYPE 4A

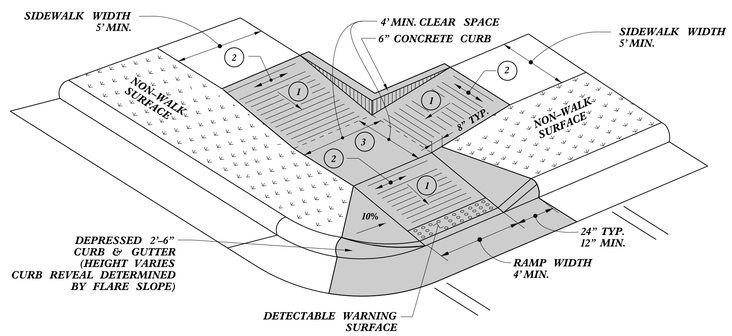

TYPE 4B

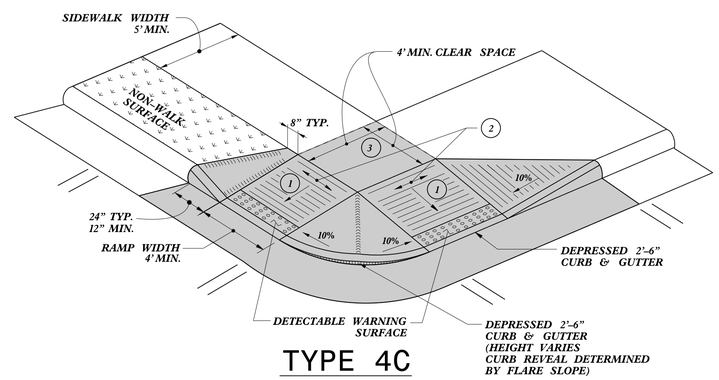

TYPE 4C

NOTES:
DETECTABLE WARNING SURFACE SHALL COVER 2'-0" LENGTH AND FULL WIDTH OF THE RAMP FLOOR AS SHOWN ON THE DETAILS.

DETECTABLE WARNING SURFACE SHALL CONTRAST VISIBLY WITH ADJOINING SURFACE, EITHER LIGHT-ON-DARK, OR DARK-ON-LIGHT SEQUENCE COVERING THE ENTIRE RAMP.

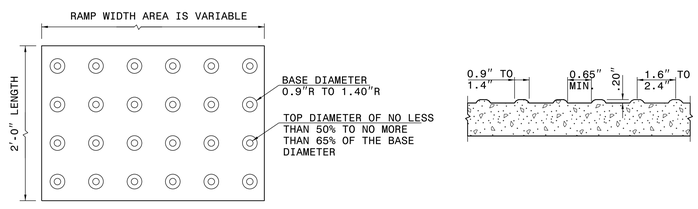

DETECTABLE WARNING SURFACE

1. 8.33% (12:1) MAX RAMP SLOPE
2. CROSS SLOPE: 2.00%
3. MAXIMUM CROSS SLOPE AND LONGITUDINAL SLOPE OF 2.00%.

PAY LIMITS FOR 1 OR 2 CURB RAMPS (CALCULATE BASED ON NUMBER OF SETS OF DETECTABLE WARNING SURFACES

STATE OF NORTH CAROLINA
DEPT. OF TRANSPORTATION
DIVISION OF HIGHWAYS
RALEIGH, N.C.

ROADWAY DETAIL DRAWING FOR
CURB RAMP
SHARED LANDING

NORTH CAROLINA PROFESSIONAL SEAL 038144 ENGINEER COLE M. HACKLER
Sign Here
Cole Hackler
Digitally signed by COLE M HACKLER
8/7/2025

SHEET 10 OF 13
848D06

DOCUMENT NOT CONSIDERED FINAL UNLESS ALL SIGNATURES COMPLETED

CONTRACTS STANDARDS AND DEVELOPMENT UNIT
Office 919-707-6950 FAX 919-250-4119

SEE TITLE BLOCK

ORIGINAL BY: S.CALHOUN DATE: 12-22-2023
MODIFIED BY: DATE:
CHECKED BY: DATE:
FILE SPEC.: special details\nmhackler\848D0610.dgn

Docusign Envelope ID: 4C8CC55A-45D9-49D1-9885-01377E2F2E5C

PROJECT REFERENCE NO.	SHEET NO.
U-5906	2C-6

POSTED SPEED	D
20 MPH	115′
25 MPH	155′
30 MPH	200′
35 MPH	250′

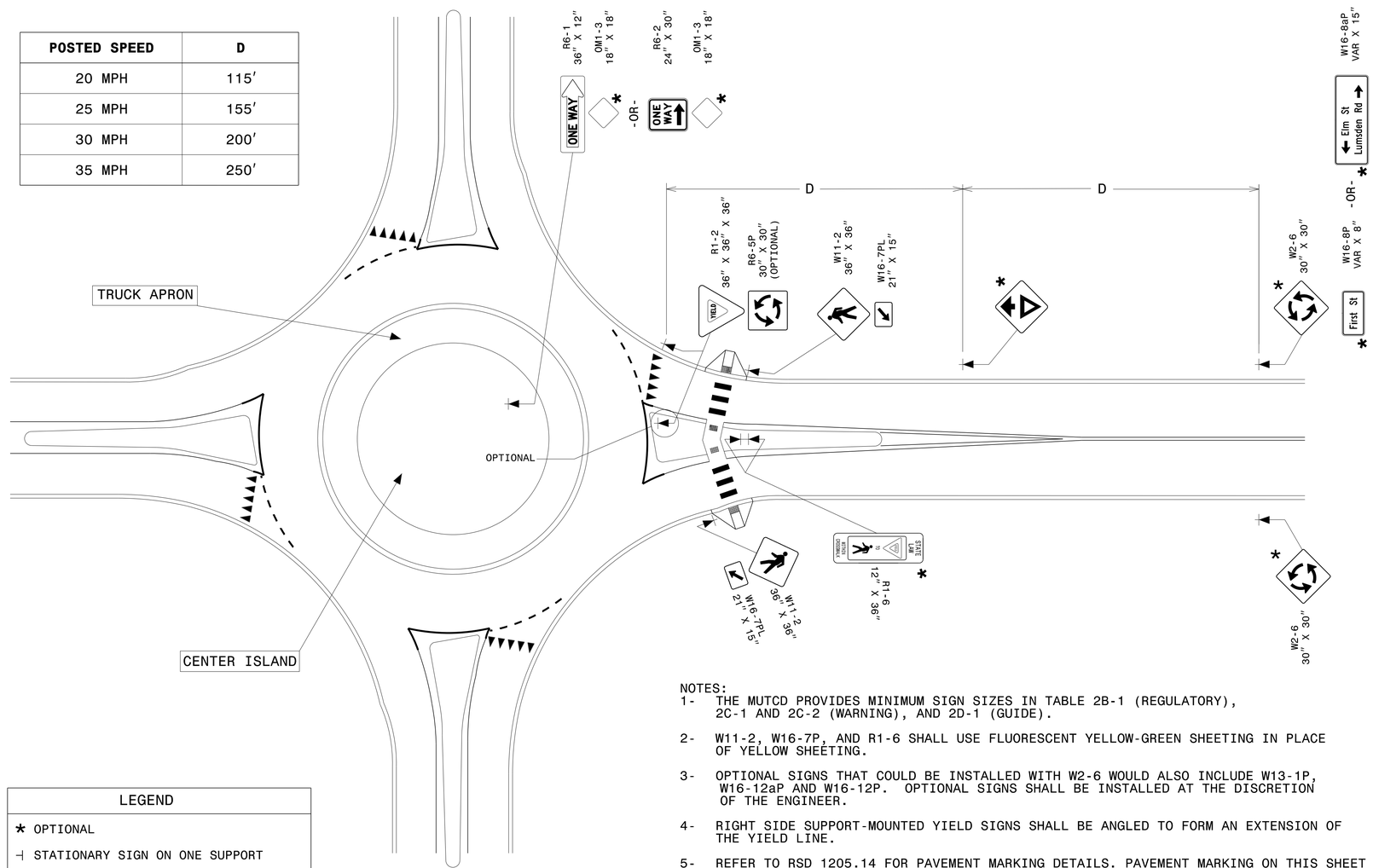

LEGEND
* OPTIONAL
⊣ STATIONARY SIGN ON ONE SUPPORT
⊣⊣ STATIONARY SIGN ON TWO SUPPORTS

NOTES:

1- THE MUTCD PROVIDES MINIMUM SIGN SIZES IN TABLE 2B-1 (REGULATORY), 2C-1 AND 2C-2 (WARNING), AND 2D-1 (GUIDE).

2- W11-2, W16-7P, AND R1-6 SHALL USE FLUORESCENT YELLOW-GREEN SHEETING IN PLACE OF YELLOW SHEETING.

3- OPTIONAL SIGNS THAT COULD BE INSTALLED WITH W2-6 WOULD ALSO INCLUDE W13-1P, W16-12aP AND W16-12P. OPTIONAL SIGNS SHALL BE INSTALLED AT THE DISCRETION OF THE ENGINEER.

4- RIGHT SIDE SUPPORT-MOUNTED YIELD SIGNS SHALL BE ANGLED TO FORM AN EXTENSION OF THE YIELD LINE.

5- REFER TO RSD 1205.14 FOR PAVEMENT MARKING DETAILS. PAVEMENT MARKING ON THIS SHEET IS SHOWN FOR REFERENCE ONLY.

6- REFER TO MUTCD FIGURES 2A-4, 2B-22, AND 2D-12 FOR ADDITIONAL SIGNING GUIDANCE.

7- THE MUTCD PROVIDES GUIDANCE FOR DIMENSION "D" IN TABLE 2C-3 AND SHOULD BE APPLIED WITH ENGINEERING JUDGEMENT.

STATE OF
NORTH CAROLINA
DEPT. OF TRANSPORTATION
DIVISION OF HIGHWAYS
RALEIGH, N.C.

ROADWAY DETAIL DRAWING FOR

SINGLE LANE URBAN ROUNDABOUT SIGNING, WITH PEDESTRIANS

SHEET 1B OF 2

910D40

NORTH CAROLINA PROFESSIONAL SEAL 042546 ENGINEER MATTHEW V. SPRINGER

Signed by: Matthew V. Springer, PE
DocSigned by: 8C60F0E8B5B4A0...

8/8/2025

CONTRACTS STANDARDS AND DEVELOPMENT UNIT
Office 919-707-8950 FAX 919-250-4119

SEE TITLE BLOCK

ORIGINAL BY: R.S. GALLO DATE: 02-29-2024
MODIFIED BY: DATE:
CHECKED BY: DATE:
FILE SPEC.:

Docusign Envelope ID: 4C8CC55A-45D9-49D1-9885-01377E2F2E5C

5/14/99

PROJECT REFERENCE NO.	SHEET NO.
U-5906	2C-7

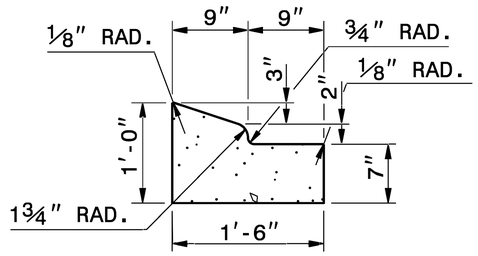

1'-6" CURB AND GUTTER

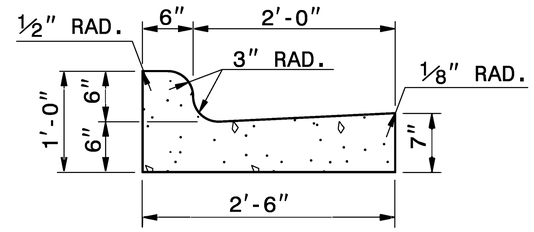

2'-6" CURB AND GUTTER

NOTE: SEE STD. DWG. 846.01 FOR ADDITIONAL CURB AND GUTTER INFORMATION.

SEE ROADWAY PLANS FOR LOCATION OF CURB TRANSITION.

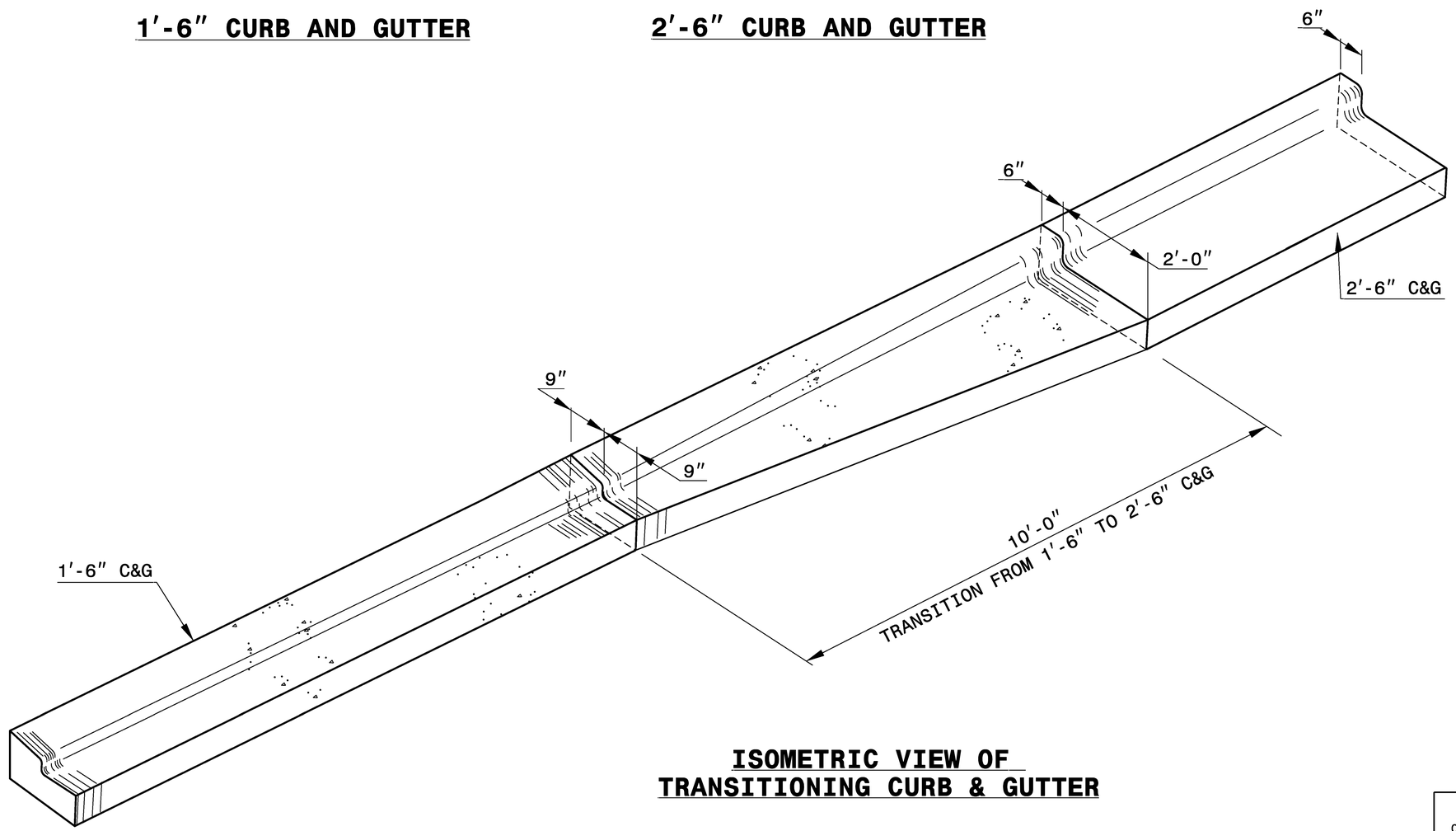

ISOMETRIC VIEW OF TRANSITIONING CURB & GUTTER

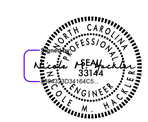

8/7/2025

DOCUMENT NOT CONSIDERED FINAL UNLESS ALL SIGNATURES COMPLETED

CONTRACT STANDARDS AND DEVELOPMENT UNIT
Office 919-707-6950 FAX 919-250-4119

DETAIL OF 1'-6" TO 2'-6" CURB & GUTTER TRANSITION SECTION

ORIGINAL BY: T.S.SPELL DATE: MARCH 3,2000
MODIFIED BY: DATE:
CHECKED BY: DATE:
FILE SPEC.: DS174:/usr/details/stand/cgtransit.dgn

Docusign Envelope ID: 4C8CC55A-45D9-49D1-9885-01377E2F2E5C

PROJECT REFERENCE NO.	SHEET NO.
U-5906	2C-8

*NOTE: SEE STD. DWG. 846.01
FOR GENERAL NOTES

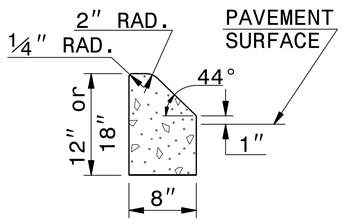

8″ X 12″ or 18″ CONCRETE CURB

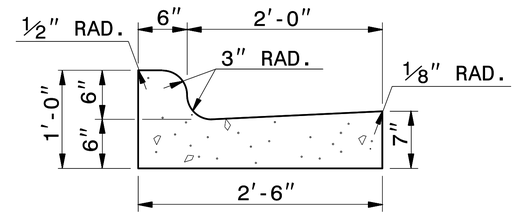

2′-6″ CURB AND GUTTER

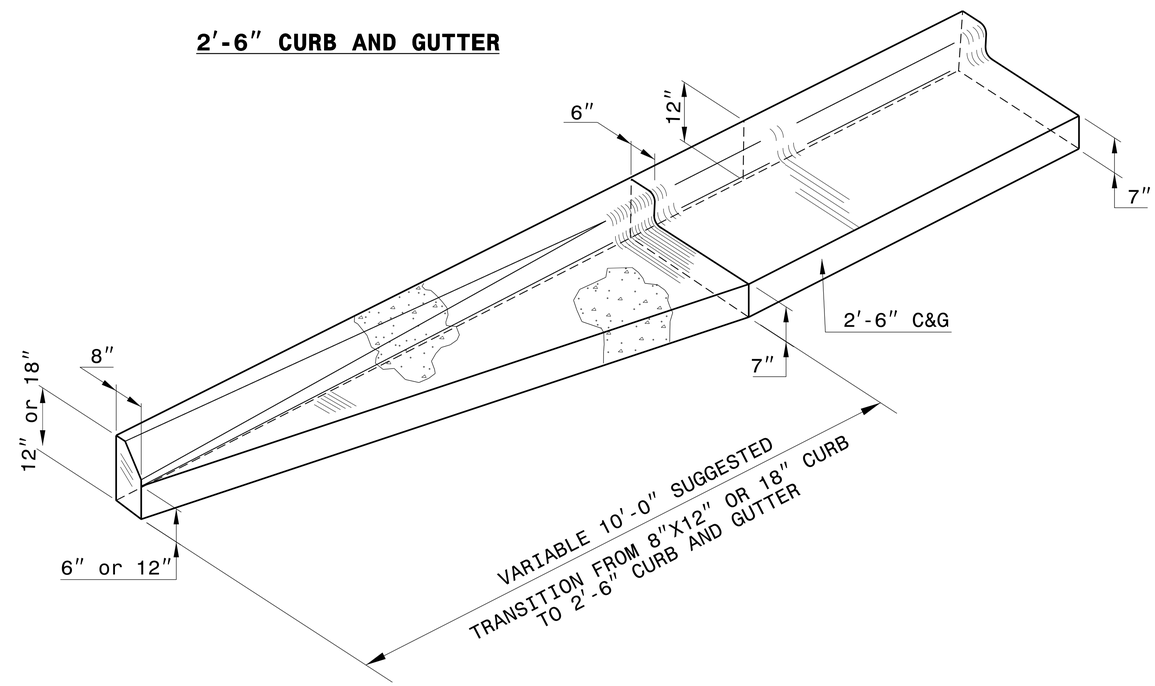

ISOMETRIC VIEW OF TRANSITION

8/7/2025

DOCUMENT NOT CONSIDERED FINAL UNLESS ALL SIGNATURES COMPLETED

CONTRACT STANDARDS AND DEVELOPMENT UNIT
Office 919-707-6950 FAX 919-250-4119

DETAIL OF 8″x 12″or 18″ CURB TO 2′-6″ CURB & GUTTER TRANSITION SECTION

ORIGINAL BY:		DATE:	
MODIFIED BY:	K. KEMPF	DATE:	4-05-18
CHECKED BY:		DATE:	
FILE SPEC.:	details/ericward/usr/details/stand/cgtransit.dgn		

13-MAR-2019 09:50
S:\Contracts\Contracts\Special Details\ericward\usr\details\stand\c&g transition sections.dgn
jhowerton AT CSD-292595

Docusign Envelope ID: 6E9E98D9-1729-4494-8A75-A86F37CA02AD

PROJECT REFERENCE NO.	SHEET NO.
U-5906	2C-9

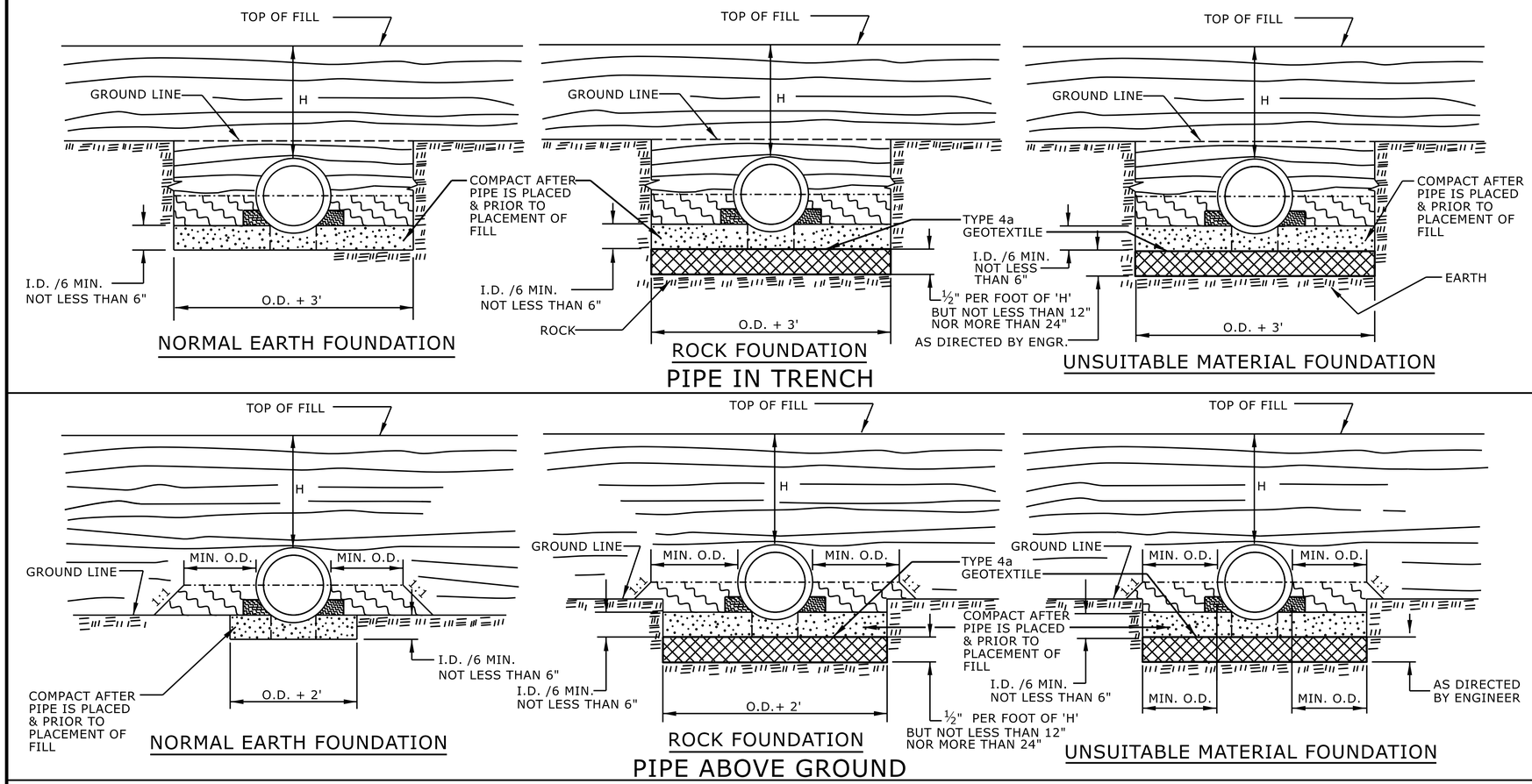

GENERAL NOTES:

I.D. = THE MAXIMUM HORIZONTAL INSIDE DIAMETER DIMENSION.

O.D. = THE MAXIMUM HORIZONTAL OUTSIDE DIAMETER DIMENSION.

H = THE FILL HEIGHT MEASURED VERTICALLY AT ANY POINT ALONG THE PIPE FROM THE TOP OF THE PIPE TO THE TOP OF THE EMBANKMENT AT THAT POINT.

APPROVED SUITABLE LOCAL MATERIAL.

TAKE CARE TO FULLY COMPACT HAUNCH ZONE OF PIPE BACKFILL.

LOOSELY PLACED SELECT MATERIAL CLASS III OR CLASS II, TYPE 1 FOR PIPE BEDDING. LEAVE SECTION DIRECTLY BENEATH PIPE UNCOMPACTED AS PIPE SEATING AND BACKFILL WILL ACCOMPLISH COMPACTION.

DO NOT OPERATE HEAVY EQUIPMENT OVER ANY PIPE CULVERT UNTIL THE PIPE CULVERT HAS BEEN PROPERLY BACKFILLED AND COVERED WITH AT LEAST 3 FEET OF APPROVED MATERIAL.

REFER TO NCDOT PIPE MATERIAL SELECTION GUIDE AND STANDARD SPECIFICATIONS FOR ALLOWABLE PIPE FILL HEIGHTS AND PIPE SPECIFICATIONS.

SPRINGLINE OF PIPE

SELECT BACKFILL MATERIAL CLASS III OR CLASS II, BELOW SPRINGLINE.

UNDISTURBED EARTH MATERIAL

SELECT MATERIAL CLASS V OR VI FOR FOUNDATION CONDITIONING. ENCAPSULATE WITH TYPE IV GEOTEXTILE AS DIRECTED BY THE ENGINEER.

STATE OF NORTH CAROLINA
DEPT. OF TRANSPORTATION
DIVISION OF HIGHWAYS
RALEIGH, N.C.

ROADWAY DETAIL DRAWING FOR

METHOD OF PIPE INSTALLATION

RIGID PIPE

NORTH CAROLINA PROFESSIONAL ENGINEER SEAL 093144 NICOLE M. HACKLEY
DocuSign Envelope ID: 5884323D3A6840...
9/18/2025

SHEET 2 OF 2

300.01

DOCUMENT NOT CONSIDERED FINAL UNLESS ALL SIGNATURES COMPLETED

CONTRACTS STANDARDS AND DEVELOPMENT UNIT
Office 919-707-6950 FAX 919-250-4119

SEE TITLE BLOCK

ORIGINAL BY: S.CALHOUN DATE: 7-25-2024
MODIFIED BY: DATE:
CHECKED BY: DATE:
FILE SPEC.:

Docusign Envelope ID: 6E9E98D9-1729-4494-8A75-A86F37CA02AD

PROJECT REFERENCE NO.	SHEET NO.
U-5906	2C-10

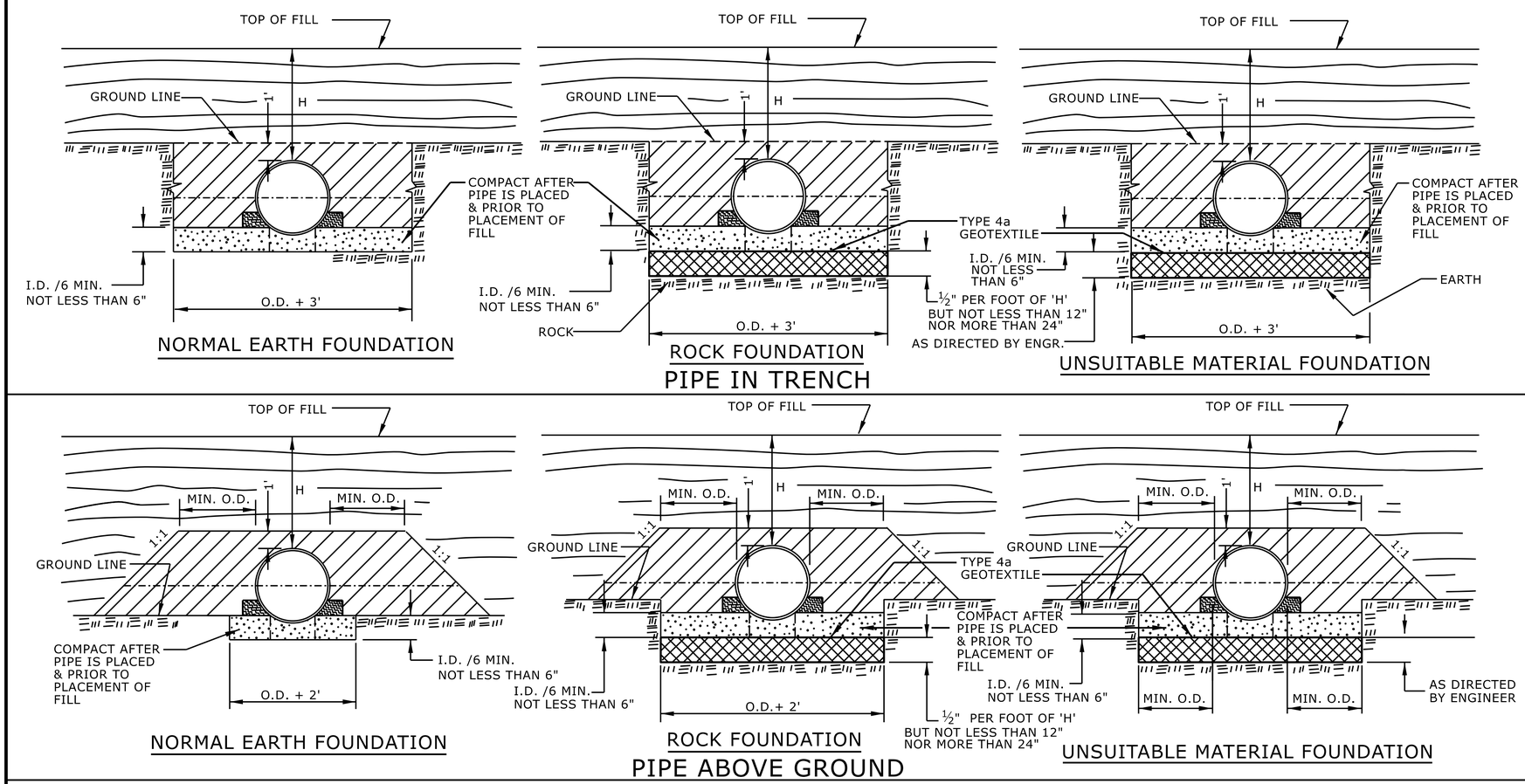

GENERAL NOTES:

I.D. = THE MAXIMUM HORIZONTAL INSIDE DIAMETER DIMENSION.

O.D. = THE MAXIMUM HORIZONTAL OUTSIDE DIAMETER DIMENSION.

H = THE FILL HEIGHT MEASURED VERTICALLY AT ANY POINT ALONG THE PIPE FROM THE TOP OF THE PIPE TO THE TOP OF THE EMBANKMENT AT THAT POINT.

APPROVED SUITABLE LOCAL MATERIAL.

TAKE CARE TO FULLY COMPACT HAUNCH ZONE OF PIPE BACKFILL.

LOOSELY PLACED SELECT MATERIAL CLASS III OR CLASS II, TYPE 1 FOR PIPE BEDDING. LEAVE SECTION DIRECTLY BENEATH PIPE UNCOMPACTED AS PIPE SEATING AND BACKFILL WILL ACCOMPLISH COMPACTION.

DO NOT OPERATE HEAVY EQUIPMENT OVER ANY PIPE CULVERT UNTIL THE PIPE CULVERT HAS BEEN PROPERLY BACKFILLED AND COVERED WITH AT LEAST 3 FEET OF APPROVED MATERIAL.

REFER TO NCDOT PIPE MATERIAL SELECTION GUIDE AND STANDARD SPECIFICATIONS FOR ALLOWABLE PIPE FILL HEIGHTS AND PIPE SPECIFICATIONS.

SPRINGLINE OF PIPE

SELECT BACKFILL MATERIAL CLASS III OR CLASS II, TYPE 1 ABOVE AND BELOW SPRINGLINE.

UNDISTURBED EARTH MATERIAL

SELECT MATERIAL CLASS V OR VI FOR FOUNDATION CONDITIONING. ENCAPSULATE WITH TYPE IV GEOTEXTILE AS DIRECTED BY THE ENGINEER.

STATE OF NORTH CAROLINA
DEPT. OF TRANSPORTATION
DIVISION OF HIGHWAYS
RALEIGH, N.C.

ROADWAY DETAIL DRAWING FOR

METHOD OF PIPE INSTALLATION

FLEXIBLE PIPE

SHEET 1 OF 2

300.01

DOCUMENT NOT CONSIDERED FINAL UNLESS ALL SIGNATURES COMPLETED

CONTRACTS STANDARDS AND DEVELOPMENT UNIT
Office 919-707-6950 FAX 919-250-4119

SEE TITLE BLOCK

ORIGINAL BY: S.CALHOUN DATE: 7-25-2024
MODIFIED BY: DATE:
CHECKED BY: DATE:
FILE SPEC.:

Docusign Envelope ID: 6E9E98D9-1729-4494-8A75-A86F37CA02AD

PROJECT REFERENCE NO.	SHEET NO.
U-5906	2C-11

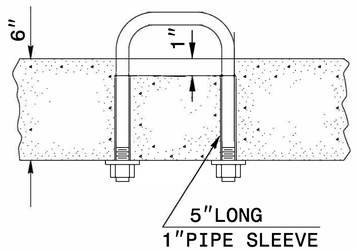

PARTIAL SECTION

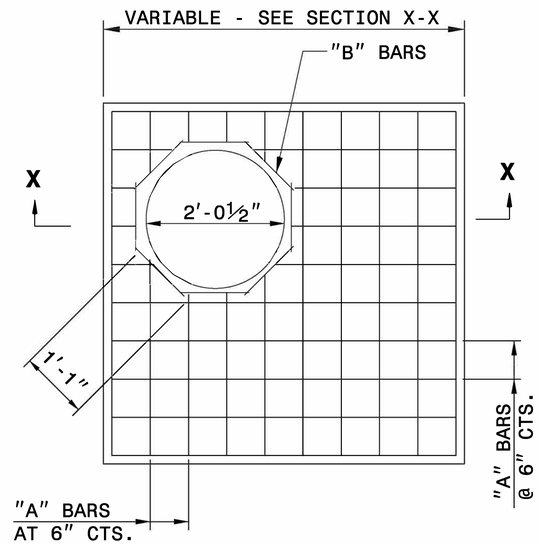

PLAN

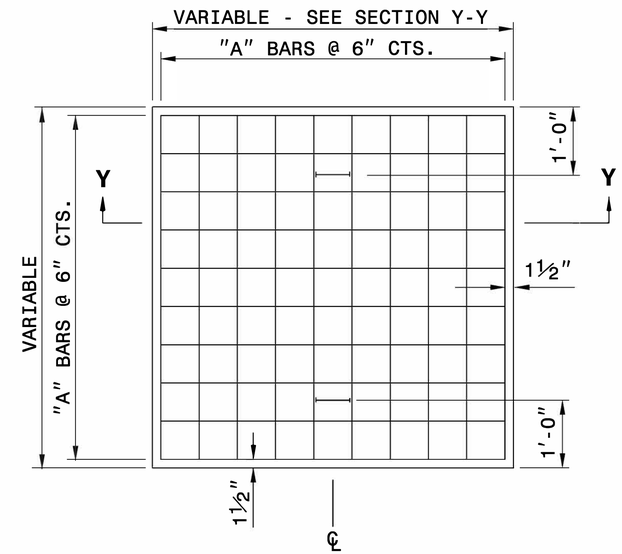

PLAN

GENERAL NOTES:

CONSTRUCT IN ACCORDANCE WITH SECTION 859 OF THE STANDARD SPECIFICATIONS.

THE DIMENSIONS FOR THE EXISTING BOXES ARE APPROXIMATE AND MAY VARY SLIGHTLY.

DETAIL INTENDED FOR NON-TRAFFIC BEARING DRAINAGE STRUCTURES.

BILL OF MATERIALS

REINFORCING STEEL				
CODE	SIZE	QTY.	LENGTH	REINF. STEEL LBS.
A	#4	20	4'-6"	60.12
B	#4	8	1'-1"	5.79
TOTAL				65.91 *

MASONRY	CU YDS
TOP SLAB CONCRETE CLASS "B"	.4326 *
BRICK MASONRY PER FT HT (MIN)	.4111

* NOTE:
QUANTITIES BASED ON 3'-6" X 3'-6" DRAINAGE STRUCTURE. ADJUST QUANTITIES FOR LARGER STRUCTURES AND MANHOLE CONSTRUCTION.

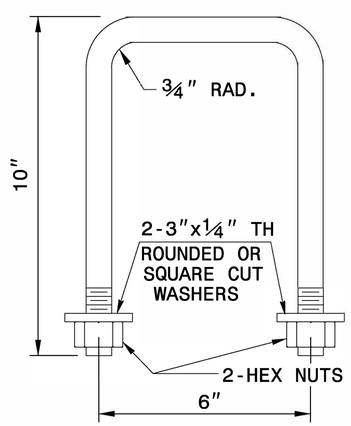

DETAIL OF HANDLE

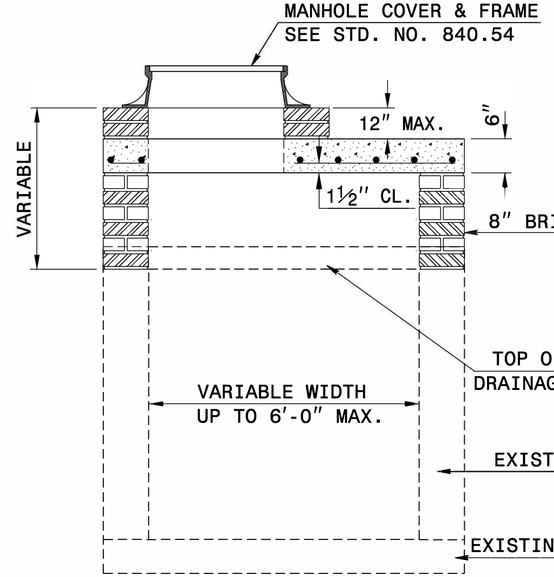

SECTION X-X

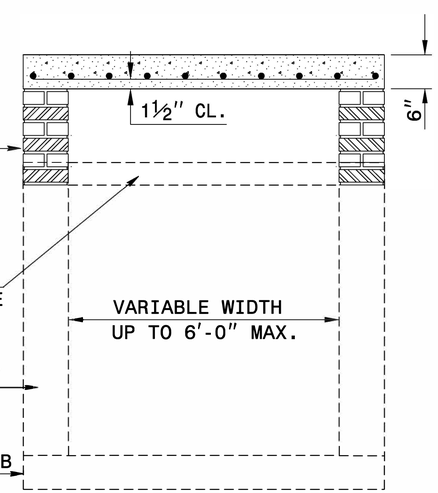

SECTION Y-Y

9/18/2025

DOCUMENT NOT CONSIDERED FINAL UNLESS ALL SIGNATURES COMPLETED

CONTRACT STANDARDS AND DEVELOPMENT UNIT
Office 919-707-6950 FAX 919-250-4119

DETAIL TO CONVERT EXISTING DI, CB, OTCB or GI TO JUNCTION BOX (MANHOLE OPTIONAL)

ORIGINAL BY: T.S.S. DATE: NOV.1997
MODIFIED BY: T.S.S. DATE: FEB.2000
CHECKED BY: DATE:
FILE SPEC.: ds174:/usr/details/stand/boxtojbe.dgn

Docusign Envelope ID: 6E9E98D9-1729-4494-8A75-A86F37CA02AD

PROJECT REFERENCE NO.	SHEET NO.
U-5906	2C-12

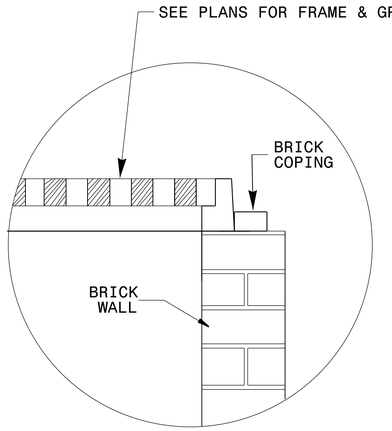

GRATE PLACEMENT DETAIL

FOR DROP INLETS

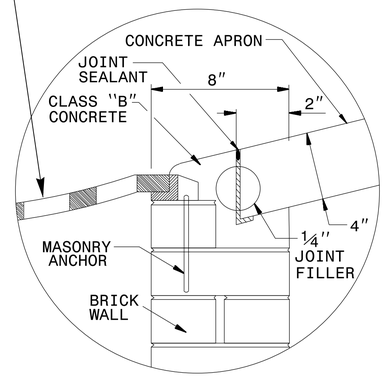

GRATE PLACEMENT DETAIL

FOR GRATED DROP INLETS

GENERAL NOTES:

- -CONSTRUCT IN ACCORDANCE WITH SECTION 859 OF THE STANDARD SPECIFICATIONS.
- -USE CLASS B CONCRETE.
- -THE DIMENSIONS FOR THE EXISTING BOXES ARE APPROXIMATE AND MAY VARY SLIGHTLY.
- -JUMBO CONCRETE BRICK WILL BE PERMITTED. 4″ CONCRETE BRICK OR 8″ SOLID CONCRETE BLOCK ARE REQUIRED FOR DRAINAGE STRUCTURE.
- -INCLUDE 18″ CONCRETE APRON IN UNIT PRICE BID PER EACH, CONVERT EXISTING CATCH BASIN TO DROP INLET.
- -SPECIAL DESIGN IS REQUIRED FOR USE UNDER PAVEMENT.
- -CONFIRM DIMENSIONS ON EACH INDIVIDUAL FRAME & GRATE PROPOSAL.
- -SEE STD. DRAWING 840.25 FOR MASONRY ANCHORAGE.

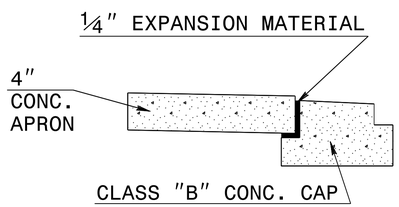

EXPANSION JOINT DETAIL

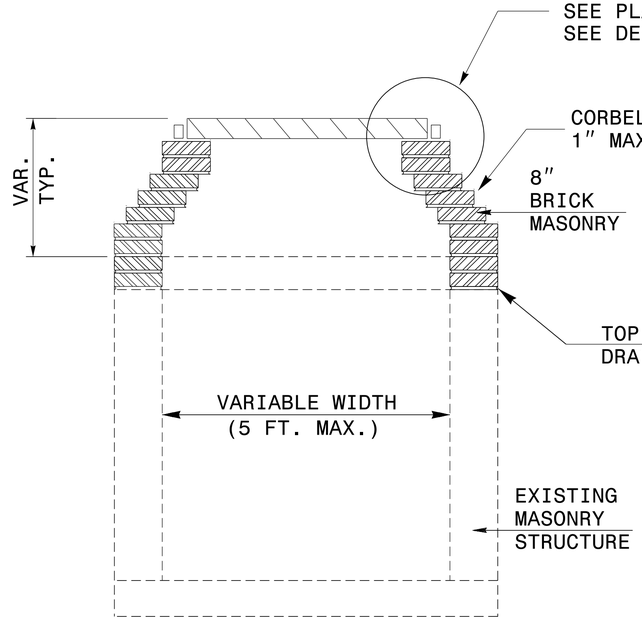

TYPICAL SECTION

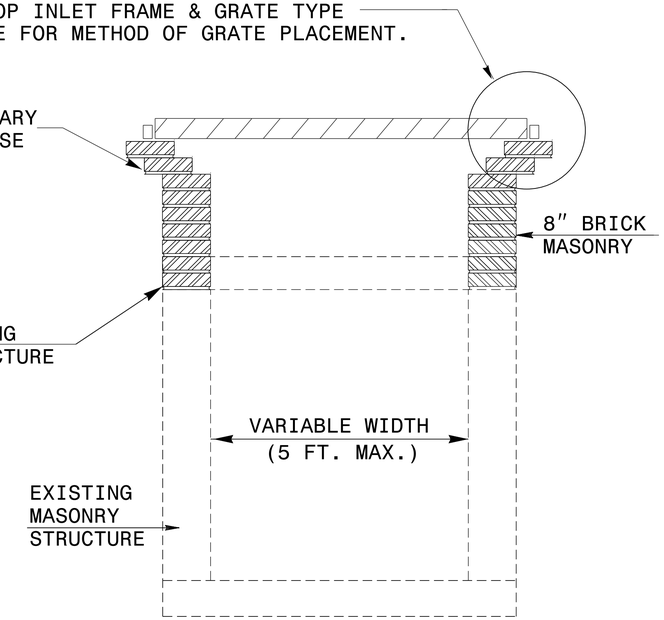

TYPICAL SECTION

CONTRACT STANDARDS AND DEVELOPMENT UNIT
Office 919-707-6950 FAX 919-250-4119

DETAIL TO CONVERT EXISTING CATCH BASIN OR JUNCTION BOX TO DI OR 2-GI

ORIGINAL BY: T.S.S. DATE: NOV.1997
MODIFIED BY: T.S.S. DATE: FEB.2000
CHECKED BY: DATE:
FILE SPEC.: s:usr/details/stand/cbtodi02.dgn

$$$$SYSTIME$$$$
$$$$USERNAME$$$$

10-AUG-2017 10:1L
S:\Contracts\Contracts\Special Details\jhowerton\840d02 Min Depth CB.dgn
jhowerton AT CSD-292595

STATE OF
NORTH CAROLINA
DEPT. OF TRANSPORTATION
DIVISION OF HIGHWAYS
RALEIGH, N.C.

ENGLISH DETAIL DRAWING FOR
MINIMUM DEPTH
CONCRETE CATCH BASIN
12" THRU 84" PIPE

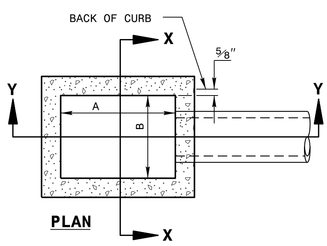

PLAN

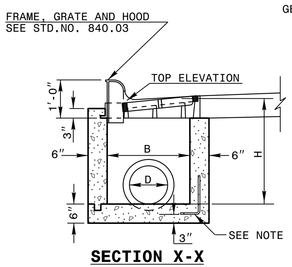

SECTION X-X

GENERAL NOTES:

USE CLASS "B" CONCRETE THROUGHOUT.

PROVIDE ALL CATCH BASINS OVER 3'-6" IN DEPTH WITH STEPS 12" ON CENTER. USE STEPS WHICH COMPLY WITH STD. DRAWING 840.66.

OPTIONAL CONSTRUCTION - MONOLITHIC POUR, 2" KEYWAY, OR #4 BAR DOWELS AT 12" CENTERS AS DIRECTED BY THE ENGINEER.

USE FORMS FOR THE CONSTRUCTION OF THE BOTTOM SLAB.

IF REINFORCED CONCRETE PIPE IS SET IN BOTTOM SLAB OF BOX, ADD TO SLAB AS SHOWN ON STD. NO. 840.00.

USE TYPE "E", "F" AND "G" GRATES UNLESS OTHERWISE INDICATED.

FOR 8'-0" IN HEIGHT OR LESS USE 6" WALLS AND BOTTOM SLAB. OVER 8'-0" TO 16'-0" IN HEIGHT USE 8" WALLS AND BOTTOM SLAB. ADJUST QUANTITIES ACCORDINGLY.

CONSTRUCT WITH PIPE CROWNS MATCHING.

CHAMFER ALL EXPOSED CORNERS 1".

** FOR STRUCTURES WITH PIPE LARGER THAN 54", MAKE THE TOP SLAB 8" THICK.

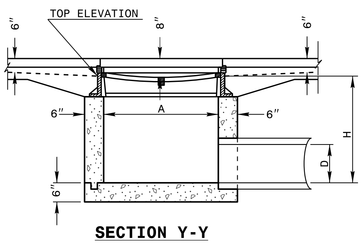

SECTION Y-Y

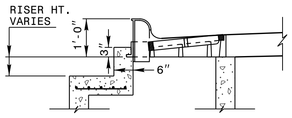

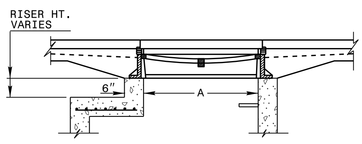

DETAIL SHOWING METHOD OF RISER CONSTRUCTION

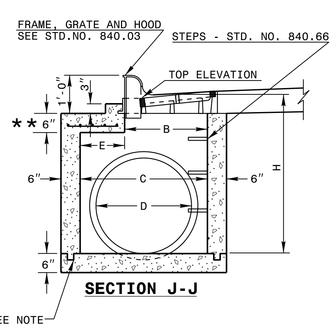

SECTION J-J

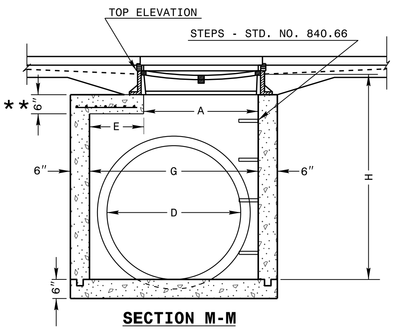

SECTION M-M

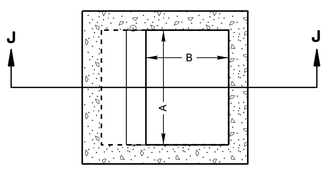

PLAN

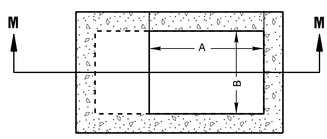

PLAN

SHEET 1 OF 2
840D02

STATE OF
NORTH CAROLINA
DEPT. OF TRANSPORTATION
DIVISION OF HIGHWAYS
RALEIGH, N.C.

ENGLISH DETAIL DRAWING FOR
MINIMUM DEPTH
CONCRETE CATCH BASIN
12" THRU 84" PIPE

** FOR STRUCTURES WITH PIPE LARGER THAN 54", MAKE THE TOP SLAB 8" THICK.

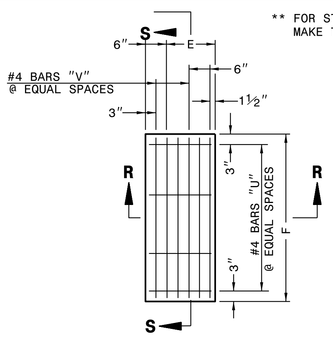

PLAN OF TOP SLAB

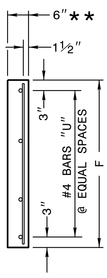

SECTION S-S

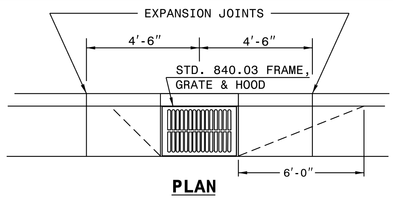

PLAN

CURB AND GUTTER WITH CATCH BASIN ON STEEP GRADES

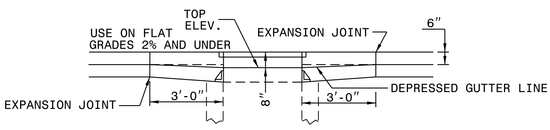

ELEVATION

NORMAL CURB AND GUTTER ON LIGHT GRADES

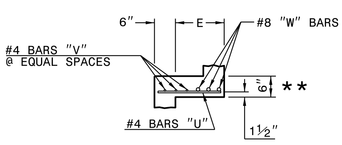

SECTION R-R

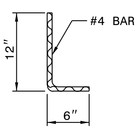

DOWEL

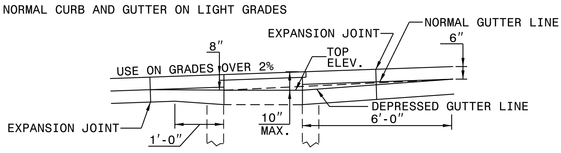

ELEVATION

NORMAL CURB AND GUTTER ON STEEP GRADES

* RISER HAS .228 CUBIC YARDS OF CONCRETE PER FOOT HEIGHT

MINIMUM DIMENSIONS AND QUANTITIES FOR CONCRETE CATCH BASIN(BASED ON MIN. HEIGHT, H, WITH NO RISER) *

DIMENSIONS OF BOX AND PIPE						COVER DIMENSION		BARS-U		BARS-V		BARS-W			CU.YDS. CONC. IN BOX			DEDUCTIONS ONE PIPE	
PIPE	SPAN	WIDTH	WIDTH	SPAN	MIN. HEIGHT									TOTAL LBS.	TOP SLAB	BOTTOM SLAB	TOT. CONC. FOR MINIMUM HEIGHT, H		
D	A	B	C	G	H	E	F	NO.	LENGTH	NO.	LENGTH	NO.	LENGTH					C.M.	R.C.
12"	3'-0"	2'-2"	--	--	2'-0"	--	--	--	--	--	--	--	--	--	--	0.235	0.772	0.015	0.026
15"	3'-0"	2'-2"			2'-3"											0.235	0.829	0.023	0.036
18"	3'-0"	2'-2"			2'-6"											0.235	0.887	0.033	0.049
24"	3'-0"	2'-2"			3'-1"											0.235	1.001	0.059	0.085
30"	3'-0"	2'-2"	3'-4"	3'-4"	3'-10"	1'-2"	4'-4"	4	1'-5"	2	4'-1"	3	4'-1"	39	0.123	0.347	1.433	0.092	0.127
36"	3'-0"	2'-2"	3'-10"	3'-10"	4'-6"	1'-8"	4'-10"	4	1'-11"	3	4'-7"	3	4'-7"	43	0.161	0.432	1.714	0.132	0.178
42"	3'-0"	2'-2"	4'-5"	4'-5"	4'-11"	2'-2"	5'-5"	5	2'-5"	4	5'-2"	3	5'-2"	47	0.200	0.543	1.738	0.180	0.243
48"	3'-0"	2'-2"	5'-0"	5'-0"	5'-6"	2'-10"	6'-0"	5	3'-1"	4	5'-9"	3	5'-9"	51	0.235	0.667	2.052	0.235	0.317
54"	3'-0"	2'-2"	5'-7"	5'-7"	6'-0"	3'-5"	6'-7"	6	3'-8"	5	6'-4"	3	6'-4"	56	0.289	0.802	2.387	0.297	0.401
60"	3'-0"	2'-2"	6'-3"	6'-3"	6'-6"	4'-1"	7'-3"	6	4'-4"	5	7'-0"	3	7'-0"	61	0.340	0.973	2.722	0.363	0.546
66"	3'-0"	2'-2"	6'-11"	6'-11"	7'-0"	4'-9"	7'-11"	7	5'-0"	6	7'-8"	3	7'-8"	66	0.391	1.160	3.057	0.440	0.655
72"	3'-0"	2'-2"	7'-6"	7'-6"	7'-6"	5'-3"	8'-6"	7	5'-6"	6	8'-3"	3	8'-3"	72	0.442	1.340	3.392	0.524	0.774
78"	3'-0"	2'-2"	8'-1"	8'-1"	8'-0"	5'-11"	9'-1"	8	6'-2"	7	8'-10"	3	8'-10"	78	0.493	1.530	3.727	0.615	0.893
84"	3'-0"	2'-2"	8'-9"	8'-9"	8'-6"	6'-7"	9'-9"	8	6'-10"	7	9'-6"	3	9'-6"	84	0.544	1.760	4.062	0.713	1.010

SHEET 2 OF 2
840D02

STATE OF
NORTH CAROLINA
DEPT. OF TRANSPORTATION
DIVISION OF HIGHWAYS
RALEIGH, N.C.

ENGLISH DETAIL DRAWING FOR
MINIMUM DEPTH
CONCRETE CATCH BASIN
12" THRU 84" PIPE

SHEET 2 OF 2
840D02

CONTRACT STANDARDS AND DEVELOPMENT UNIT
Office 919-707-6950 FAX 919-250-4119

SEE PLATE FOR TITLE

ORIGINAL BY: 2002 Std.840.01 DATE:
MODIFIED BY: E.E. WARD DATE: 3-1-02
CHECKED BY: DATE:
FILE SPEC.: s:\Special Details\jhowerton\840d02.dgn

DOCUMENT NOT CONSIDERED FINAL UNLESS ALL SIGNATURES COMPLETED

NICOLE M. HARRIS
SEAL 036444
NORTH CAROLINA PROFESSIONAL ENGINEER
9/18/2025

PROJECT REFERENCE NO. U-5906
SHEET NO. 2C-13

Docusign Envelope ID: 06076E74-C5F4-41E6-A21F-AE96FD096F64

12/06/07

COMPUTED BY: CGL DATE: 1/14/2019
CHECKED BY: SMK DATE: 4/23/2019

STATE OF NORTH CAROLINA
DIVISION OF HIGHWAYS

PROJECT REFERENCE NO.	SHEET NO.
U-5906	3B-1

RS&H 1520 SOUTH BOULEVARD, SUITE 200 CHARLOTTE, NC 28203 NC FIRM LICENSE No: F-0493

SUMMARY OF EARTHWORK

IN CUBIC YARDS

STATION	STATION	TOTAL UNCL. EXCAV.	EMBANK. +%	BORROW	WASTE
NORTH					
PHASE I, STEP 2					
-Y1- 12+50.00 RT	-Y1- 15+43.58 RT	87	18	0	69
-Y1A- 10+26.04	-Y1A- 18+00.00	3,483	511	0	2,972
-Y2- 12+20.00	-Y2- 15+80.48	89	647	558	0
-Y2A- 9+60.00	-Y2A- 11+34.43	22	415	393	0
PHASE I, STEP 3					
-Y1- 12+50.00 LT	-Y1- 15+43.58 LT	42	79	37	0
-Y1A- 18+00.00	-Y1A- 32+50.00	4,149	2,661	0	1,488
PHASE I, STEP 4					
-Y1A- 32+50.00	-Y1A- 39+00.00	578	1,281	703	0
-EY1- 41+90.00	-EY1- 43+90.00	8	33	25	0
PHASE II, STEP 1					
-RA1- 10+00.00	-RA1- 12+95.29	522	1,176	654	0
-Y1A- 37+50.00	-Y1A- 40+41.52	130	38	0	92
-Y3B- 10+62.68	-Y3B- 14+00.00	1,877	25	0	1,852
PHASE II, STEP 2					
-RA1- 10+50.00	-RA1- 11+50.00	0	144	144	0
-Y1A- 39+00.00 RT	-Y1A- 40+41.52 RT	10	568	558	0
-Y1B- 10+60.80 LT	-Y1B- 14+46.00 LT	157	21	0	136
-Y3A- 11+80.00	-Y3A- 14+29.01	352	125	0	227
-Y3B- 12+50.00 RT	-Y3B- 14+00.00 RT	16	69	53	0
-DRIVE5- 10+26.79	-DRIVE5- 10+96.00	68	1	0	67
PHASE II, STEP 3					
-Y1B- 10+60.80 RT	-Y1B- 14+46.00 RT	56	164	108	0
-Y3A- 11+80.00	-Y3A- 14+29.01	19	81	62	0
PHASE III, STEP 1					
-Y6A- 11+48.86	-Y6A- 14+50.00	117	44	0	73
-Y6B- 14+00.00	-Y6B- 15+00.00	31	0	0	31
-DRIVE2- 10+26.40	-DRIVE2- 11+55.00	310	0	0	310
PHASE III, STEP 2					
-Y6A- 14+50.00 LT	-Y6A- 17+09.28 LT	42	629	587	0
-DRIVE3- 10+85.00	-DRIVE3- 12+37.63	72	766	694	0
-RA2- 11+76.61	-RA2- 10+33.01	97	1,066	969	0
-Y6B- 10+65.08 LT	-Y6B- 13+70.00 LT	928	14	0	914
PHASE III, STEP 3					
-Y6A- 14+50.00 RT	-Y6A- 17+09.28 RT	63	300	237	0
-DRIVE4- 10+18.77	-DRIVE4- 11+20.00	319	0	0	319
-RA2- 10+33.01	-RA2- 11+76.61	181	772	591	0
-Y6B- 10+65.08 RT	-Y6B- 13+70.00 RT	835	8	0	827
SUBTOTAL		14,660	11,656	6,372	9,377

SOUTH					
PHASE IV, STEP 2					
-Y4A- 12+25.00	-Y4A- 14+98.89	315	531	216	0
-DRIVE1- 10+18.15 LT	-DRIVE1- 11+55.00 LT	28	43	15	0
-RA3- 10+00.00	-RA3- 10+81.96	0	139	139	0
-Y5- 10+18.00 RT	-Y5- 12+00.00 RT	10	97	87	0
PHASE V, STEP 1					
-Y5- 10+18.00 LT	-Y5- 12+00.00 RT	25	108	83	0
-DRIVE1- 10+18.15 RT	-DRIVE1- 11+55.00 RT	13	51	38	0
-RA3- 10+78.29	-RA3- 12+50.00	0	342	342	0
-Y4B- 10+65.00	-Y4B- 20+50.00	727	1,028	301	0
-L- 32+50.00	-L- 37+50.00	750	2,446	1,696	0
-RPC- 11+00.00 RT	-RPC- 13+09.00 RT	118	1,655	1,537	0
PHASE V, STEP 2					
-RA3- 10+00.00	-RA3- 12+95.29	0	2,122	2,122	0
-Y4B- 14+00.00	-Y4B- 20+50.00	131	21	0	110
-RPC- 11+00.00 LT	-RPC- 13+00.00 LT	28	31	3	0
SUBTOTAL:		2,145	8,612	6,578	110
TOTALS:		16,805	20,068	12,950	9,487
WASTE IN LIEU OF BORROW				-9,487	-9,487
PROJECT TOTALS:		16,805	20,068	3,463	0
EST. 5% TO REPLACE TOP SOIL ON BORROW PIT				173	
GRAND TOTALS:		16,805	20,268	3,636	0
SAY:		17,650		3,820	

BREAKING OF EXISTING ASPHALT SUMMARY

SURVEY LINE	STATION	STATION	LOCATION LT/RT/CL	YD^2
-Y1A-	12+20	12+41	LT	8.00
-Y2-	11+87	12+15	LT	15.61
-Y2A-	10+72	11+27	CL	153.41
-Y4A-	14+70	14+99	CL	40.96
-Y6A-	16+42	17+09	CL	248.70
-DRIVE3-	11+45	12+38	CL	372.47
-RA1-	10+18	10+73	CL	60.52
-RA2-	10+00	10+21	CL	5.13
-RA2-	10+35	10+70	CL	52.51
-RA2-	13+00	14+08	CL	171.92
-RA3-	10+10	10+24	CL	21.42
-RA3-	10+90	11+61	CL	89.71
-RA3-	11+96	12+22	CL	40.99
-RA3-	12+47	12+81	CL	54.04
-RA3-	13+25	13+40	CL	25.35
-RA3-	13+64	13+92	CL	37.92
			TOTAL:	1,398.68
			SAY:	1,400

PAVEMENT REMOVAL SUMMARY

SURVEY LINE	STATION	STATION	LOCATION LT/RT/CL	YD^2	SURVEY LINE	STATION	STATION	LOCATION LT/RT/CL	YD^2
-Y1-	12+88	12+93	RT	3.09	-Y1-	15+42	15+46	RT	4.33
-Y1-	12+98	13+60	RT	23.25	-Y3A-	11+80	12+09	LT	3.37
-Y1-	14+66	14+42	RT	2.34	-Y3A-	11+80	12+35	RT	12.63
-Y1-	13+35	15+43	LT	184.45	-Y3A-	12+43	12+58	RT	7.63
-Y1A-	10+26	12+91	RT	1,199.64	-Y3A-	12+76	13+49	RT	19.30
-Y2-	12+12	15+83	LT	1,237.98	-Y1B-	10+60	11+10	RT	10.58
-Y2-	13+65	14+18	RT	49.62	-Y1B-	10+93	11+36	LT	7.75
-Y2A-	10+05	10+72	CL	183.61	-Y1B-	13+16	13+29	LT	3.23
-Y2A-	11+27	11+36	CL	39.58	-Y1B-	13+44	13+76	LT	3.42
-Y1A-	15+37	39+00	CL	6,149.57	-Y1B-	14+07	14+46	LT	7.55
-Y1A-	39+00	40+55	CL	552.53	-Y1B-	12+19	12+92	RT	16.16
-Y1A-/-Y1B-	40+65	10+61	CL	286.40	-Y1B-	14+17	14+46	RT	3.24
-Y3A-	11+62	11+80	LT	1.96	-Y3B-	13+65	14+11	LT	7.20
-Y3A-	12+78	14+49	RT	507.80	-Y3B-	12+42	13+90	RT	32.89
-Y3B-	10+04	12+02	RT	476.66	-Y4A-	12+25	13+72	LT	36.23
-Y3B-	12+27	13+57	RT	239.79	-Y4A-	12+25	12+55	LT	3.86
-Y4A-	12+27	13+70	LT	81.27	-Y4A-	14+77	15+00	LT	4.5
-Y4A-	13+95	15+11	LT	157.83	-Y4A-	12+25	13+85	RT	32.81
-Y4A-	12+25	14+70	CL	241.69	-Y4A-	12+25	12+55	RT	3.34
-Y4A-/-Y4B-	14+99	14+00	CL	2,328.17	-Y5-	10+98	11+79	RT	20.01
-Y4B-	14+29	16+10	LT	105.79	-Y5-	12+13	12+55	LT	7.95
-Y4B-	16+30	17+93	LT	85.29	-DRIVE1-	10+42	10+72	LT	6.21
-Y4B-	18+13	20+49	LT	154.71	-DRIVE1-	10+35	10+62	RT	6.38
-Y4B-	14+65	15+98	RT	52.92	-Y4B-	14+25	16+12	LT	43.74
-Y4B-	16+23	17+91	RT	78.74	-Y4B-	16+26	17+94	LT	43.11
-Y4B-	14+35	15+90	CL	41.21	-Y4B-	18+10	20+49	LT	62.11
-Y4B-	16+32	20+39	RT	93.30	-Y4B-	14+33	15+92	CL	59.39
-Y6A-	14+68	16+42	CL	1,407.99	-Y4B-	14+46	16+00	RT	35.74
-Y6A-/-Y6B-	17+09	14+80	CL	2,077.86	-Y4B-	16+21	17+91	RT	43.89
					-L-	32+26	34+16	LT	12.43
TEMPORARY MOT PAVEMENT REMOVAL					-L-	34+95	35+01	LT	1.88
-Y4B-/-Y5-	10+73	11+62	CL	301.02	-L-	35+41	35+43	LT	1.26
					-L-	37+13	37+54	LT	7.74
SAWCUT					-L-	34+92	35+03	RT	7.25
-Y1-	12+56	12+62	RT	2.64	-L-	35+31	35+51	RT	8.19
-Y1-	12+50	13+00	LT	15.33	-RPC-	12+86	13+09	RT	3.29
-Y1-	12+94	13+70	RT	20.78	-Y6A-	13+25	13+63	LT	4.47
-Y1-	13+30	15+46	LT	54.04	-Y6A-	13+86	13+92	LT	7.05
-Y1-	13+85	13+86	RT	1.41	-Y6A-	14+07	14+12	LT	4.16
-Y1-	14+17	14+66	RT	8.80	-Y6A-	13+25	13+38	RT	2.02
								TOTAL:	19,057.35
								SAY:	19,060

Earthwork quantities are calculated by the Roadway Design Unit. These earthwork quantities are based in part on subsurface data provided by the Geotechnical Engineering Unit.

Note: Approximate quantities only. Unclassified excavation, borrow excavation, fine grading, clearing and grubbing, breaking of existing pavement and removal of existing pavement will be paid for at the lump sum price for "Grading".

EST 2000 CY SHALLOW UNDERCUT (FROM GEOTECH RECOMMENDATIONS)
EST 4200 TON CLASS IV SUBGRADE STABILIZATION (FROM GEOTECH RECOMMENDATIONS)
EST 250 TON STABILIZER AGGREGATE (FROM GEOTECH RECOMMENDATIONS)

"N" = DISTANCE FROM EDGE OF LANE TO FACE OF GUARDRAIL.
TOTAL SHOULDER WIDTH = DISTANCE FROM EDGE OF TRAVEL LANE TO SHOULDER BREAK POINT.
FLARE LENGTH = DISTANCE FROM LAST SECTION OF PARALLEL GUARDRAIL TO END OF GUARDRAIL.
W = TOTAL WIDTH OF FLARE FROM BEGINNING OF TAPER TO END OF GUARDRAIL.
G = GATING IMPACT ATTENUATOR TYPE 350
NG = NON-GATING IMPACT ATTENUATOR TYPE 350

GUARDRAIL SUMMARY

SURVEY LINE	BEG. STA.	END STA.	LOCATION	LENGTH			WARRANT POINT		"N" DIST. FROM E.O.L.	TOTAL SHOUL. WIDTH	FLARE LENGTH		W		ANCHORS									IMPACT ATTENUATOR TYPE 350			SINGLE FACED GUARDRAIL	REMOVE EXISTING GUARDRAIL	REMOVE AND STOCKPILE EXISTING GUARDRAIL	EXTRA LENGTH GUARDRAIL POST (8' STEEL) EACH	REMARKS
				STRAIGHT	SHOP CURVED		APPROACH END	TRAILING END			APPROACH END	TRAILING END	APPROACH END	TRAILING END	GREU TL-2	CAT-1	B-77	TES						EA	G	NG					
-Y1B-	10+96.06	14+46.00	RT	350			12+00.00	14+00.00	2'-6"	7'-6"					2															32	
-Y6A-	14+27.89	16+65.18	LT	237.50			16+65.18		2'-6"						1	1														34	
-Y6A-	14+68.54	14+96.53	RT	50			14+80.00		2'-6"									2													
-Y6B-	10+98.88	11+54.26	LT	54.125			10+94.03		13'						1		1														
-RPC-	10+96.66	12+75.00	RT	162.50			12+50.00		18'-6"	20'-6"					1	1															
			SUBTOTALS	854.125																											
			ANCHOR DEDUCTION	160.375																											
			TOTAL	693.75																											
			SAY	712.50																											

ANCHOR DEDUCTION
GREU TL-2: 5 @ 25' = 125'
CAT-1: 2 @ 6.25' = 12.5'
B-77: 1 @ 22.875' = 22.875'
GRAND TOTAL = 160.375'
ADDITIONAL GUARDRAIL POSTS = 5

17-SEP-2025 10:23
R:\Roadway\Proj\U5906_Rdy_sum_3B.dgn
KrawczuS

Docusign Envelope ID: 89DA0246-5698-4053-BB60-AE753ECDB5AC

R0246821

COMPUTED BY: CMB	DATE: 5/4/2022	PROJECT NO.	SHEET NO.
CHECKED BY: ARV	DATE: 8/27/2025	U-5906	3D-1

NORTH CAROLINA DEPARTMENT OF TRANSPORTATION
DIVISION OF HIGHWAYS

Note: Invert Elevations indicated are for Bid Purposes only and shall not be used for project construction stakeout. See "Standard Specifications For Roads and Structures, Section 300-5".

LIST OF PIPES, ENDWALLS, ETC. (FOR PIPES 48 INCHES & UNDER)

| LINE & STATION | OFFSET | STRUCTURE NUMBER FROM | STRUCTURE NUMBER TO | TOP ELEVATION FT. | INVERT ELEVATION FT. | INVERT ELEVATION FT. | MINIMUM REQUIRED SLOPE % | C.S. PIPE 12 0.064 | C.S. PIPE 15 0.064 | C.S. PIPE 18 0.064 | C.S. PIPE 24 0.064 | C.S. PIPE 30 0.079 | C.S. PIPE 36 0.079 | C.S. PIPE 42 0.109 | C.S. PIPE 48 0.109 | R.C. PIPE CLASS III 12 | R.C. PIPE CLASS III 15 | R.C. PIPE CLASS III 18 | R.C. PIPE CLASS III 24 | R.C. PIPE CLASS III 30 | R.C. PIPE CLASS III 36 | R.C. PIPE CLASS III 42 | R.C. PIPE CLASS III 48 | R.C. PIPE CLASS IV 12 | R.C. PIPE CLASS IV 15 | R.C. PIPE CLASS IV 18 | R.C. PIPE CLASS IV 24 | R.C. PIPE CLASS IV 30 | R.C. PIPE CLASS IV 36 | R.C. PIPE CLASS IV 42 | R.C. PIPE CLASS IV 48 | R.C. PIPE CLASS V 12 | R.C. PIPE CLASS V 15 | R.C. PIPE CLASS V 18 | R.C. PIPE CLASS V 24 | R.C. PIPE CLASS V 30 | R.C. PIPE CLASS V 36 | R.C. PIPE CLASS V 42 | R.C. PIPE CLASS V 48 | ENDWALLS STD. 838.01 OR STD.838.11 (UNLESS OTHERWISE NOTED) CY | REINFORCED ENDWALLS CY | MASONRY DRAINAGE STRUCTURE CY | 15" SIDE DRAIN PIPE | 18" SIDE DRAIN PIPE | ENDWALLS STD. 838.01 838.11 OR STD. 838.80 (UNLESS NOTED OTHERWISE) CU. YARDS R.C.P. | ENDWALLS STD. 838.01 838.11 OR STD. 838.80 (UNLESS NOTED OTHERWISE) CU. YARDS C.S.P. | QUANTITIES FOR DRAINAGE STRUCTURES *TOTAL L.F. FOR PAY QUANTITY SHALL BE COL. 'A' + (1.3 X COL.'B') PER EACH (0' THRU 5.0') | LIN.FT. A 5.0' THRU 10.0' | LIN.FT. B 10.0' AND ABOVE | C.B. STD. 840.01 OR STD. 840.02 | FRAME, GRATES, AND HOOD STANDARD 840.03 TYPE OF GRATE E | FRAME, GRATES, AND HOOD STANDARD 840.03 TYPE OF GRATE F | FRAME, GRATES, AND HOOD STANDARD 840.03 TYPE OF GRATE G | CONCRETE TRANSITIONAL SECTION D.I. STD. 852.04 OR STD. 852.06 | CONCRETE TRANSITIONAL SECTION C.B. STD. 852.05 | D.I. STD. 840.14 OR STD. 840.15 | D.I. FRAME AND GRATE STD. 840.16 | G.D.I. TYPE "A" STD. 840.17 OR 840.26 | G.D.I. TYPE "B" STD. 840.18 OR 840.27 | G.D.I. TYPE "D" STD. 840.19 OR 840.28 | T.B. G.D.I. (W.S. FLAT) FRAME W/ 2 GRATES STD. 840.29 | G.D.I. (W.S. FLAT) FRAME W/ 2 GRATES STD. 840.20 | G.D.I. (W.S. SAG) FRAME W/ 2 GRATES STD. 840.22 | G.D.I. (W.S. SAG) FRAME W/ 3 GRATES STD. 840.22 | G.D.I. (N.S. SAG) FRAME W/ 2 GRATES STD. 840.24 | J.B. STD. 840.31 OR 840.32 | T.B. J.B. STD. 840.34 | T.B.G.D.I. STD. 840.35 | STEEL FRAME AND TWO GRATES STD. 840.37 | STEEL FRAME AND GRATE STD. 840.37 | M.H. STD. 840.51 STD. 840.52, OR STD.53 | M.H. FRAME AND COVER STD. 840.54 | CONVERT EXISTING D.I. TO C.B. | CONVERT EXISTING C.B. TO J.B. w/MH | CONVERT EXISTING D.I. TO J.B. w/MH | CONVERT EXISTING J.B. TO 2 G.I. | CONVERT C.B. TO D.I. | ADJUST EXISTING MANHOLE | ADJUST EXISTING C.B. | ADJUST D.I. | ADJUST 2GI | 15" C.S. ELBOW | 18" C.S. ELBOW | 24" C.S. ELBOW | 30" C.S. ELBOW | 36" C.S. ELBOW | PARALLEL PIPE END SECTION - PRECAST CONCRETE SECTION FOR 15" TO 24" STD. 310.02 | CROSS PIPE END SECTION - PRECAST CONCRETE SECTION FOR 18" TO 30" STD. 310.03 | BERM DITCH OUTLET STD. 850.10 (PER EACH) | BERM DITCH OUTLET STD. 850.11 (PER EACH) | CONC. COLLARS CL. "B" C.Y. STD. 840.72 | FLOWABLE FILL, C.Y. | CONC. & BRICK PLUG, C.Y. STD. 840.71 | PIPE REMOVAL LIN. FT. | REMARKS |
|---|---|---|---

Docusign Envelope ID: 89DA0246-5698-4053-BB60-AE753ECDB5AC

R0246821

COMPUTED BY:	CMB	DATE:	5/4/2022
CHECKED BY:	ARV	DATE:	8/27/2025

NORTH CAROLINA DEPARTMENT OF TRANSPORTATION
DIVISION OF HIGHWAYS

PROJECT NO.	SHEET NO.
U-5906	3D-2

Note: Invert Elevations indicated are for Bid Purposes only and shall not be used for project construction stakeout. See "Standard Specifications For Roads and Structures, Section 300-5".

LIST OF PIPES, ENDWALLS, ETC. (FOR PIPES 48 INCHES & UNDER)

| LINE & STATION | OFFSET | STRUCTURE NUMBER FROM | STRUCTURE NUMBER TO | TOP ELEVATION FT. | INVERT ELEVATION FT. | INVERT ELEVATION FT. | MINIMUM REQUIRED SLOPE % | C.S.P. 12 0.064 | C.S.P. 15 0.064 | C.S.P. 18 0.064 | C.S.P. 24 0.064 | C.S.P. 30 0.079 | C.S.P. 36 0.079 | C.S.P. 42 0.109 | C.S.P. 48 0.109 | R.C. PIPE CLASS III 12 | R.C. PIPE CLASS III 15 | R.C. PIPE CLASS III 18 | R.C. PIPE CLASS III 24 | R.C. PIPE CLASS III 30 | R.C. PIPE CLASS III 36 | R.C. PIPE CLASS III 42 | R.C. PIPE CLASS III 48 | R.C. PIPE CLASS IV 12 | R.C. PIPE CLASS IV 15 | R.C. PIPE CLASS IV 18 | R.C. PIPE CLASS IV 24 | R.C. PIPE CLASS IV 30 | R.C. PIPE CLASS IV 36 | R.C. PIPE CLASS IV 42 | R.C. PIPE CLASS IV 48 | R.C. PIPE CLASS V 12 | R.C. PIPE CLASS V 15 | R.C. PIPE CLASS V 18 | R.C. PIPE CLASS V 24 | R.C. PIPE CLASS V 30 | R.C. PIPE CLASS V 36 | R.C. PIPE CLASS V 42 | R.C. PIPE CLASS V 48 | ENDWALLS STD. 838.01 OR STD.838.11 (UNLESS OTHERWISE NOTED) CY | REINFORCED ENDWALLS CY | MASONRY DRAINAGE STRUCTURE CY | 15" SIDE DRAIN PIPE | 18" SIDE DRAIN PIPE | ENDWALLS STD. 838.01 838.11 OR STD. 838.80 (UNLESS NOTED OTHERWISE) CU. YARDS R.C.P. | ENDWALLS STD. 838.01 838.11 OR STD. 838.80 (UNLESS NOTED OTHERWISE) CU. YARDS C.S.P. | QUANTITIES FOR DRAINAGE STRUCTURES *TOTAL L.F. FOR PAY QUANTITY SHALL BE COL. 'A' + (1.3 X COL.'B') PER EACH (0' THRU 5.0') | LIN.FT. A 5.0' THRU 10.0' | LIN.FT. B 10.0' AND ABOVE | C.B. STD. 840.01 OR STD. 840.02 | FRAME, GRATES, AND HOOD STANDARD 840.03 TYPE OF GRATE E | TYPE OF GRATE F | TYPE OF GRATE G | CONCRETE TRANSITIONAL SECTION D.I. STD. 852.04 OR STD. 852.06 | CONCRETE TRANSITIONAL SECTION C.B. STD. 852.05 | D.I. STD. 840.14 OR STD. 840.15 | D.I. FRAME AND GRATE STD. 840.16 | G.D.I. TYPE "A" STD. 840.17 OR 840.26 | G.D.I. TYPE "B" STD. 840.18 OR 840.27 | G.D.I. TYPE "D" STD. 840.19 OR 840.28 | T.B. G.D.I. (W.S. FLAT) FRAME W/ 2 GRATES STD. 840.29 | G.D.I. (W.S. SAG) FRAME W/ 2 GRATES STD. 840.20 | G.D.I. (W.S. SAG) FRAME W/ 3 GRATES STD. 840.22 | G.D.I. (N.S. SAG) FRAME W/ 2 GRATES STD. 840.24 | J.B. STD. 840.31 OR 840.32 | T.B. J.B. STD. 840.34 | T.B.G.D.I. STD. 840.35 | STEEL FRAME AND TWO GRATES STD. 840.37 | STEEL FRAME AND GRATE STD. 840.37 | M.H. STD. 840.51, STD. 840.52, OR STD.53 | M.H. FRAME AND COVER STD. 840.54 | CONVERT EXISTING D.I. TO C.B. | CONVERT EXISTING C.B. TO J.B. w/MH | CONVERT EXISTING D.I. TO J.B. w/MH | CONVERT EXISTING J.B. TO 2 G.I. | CONVERT C.B. TO D.I. | ADJUST EXISTING MANHOLE | ADJUST EXISTING C.B. | ADJUST D.I. | ADJUST 2GI | 15" C.S. ELBOW | 18" C.S. ELBOW | 24" C.S. ELBOW | 30" C.S. ELBOW | 36" C.S. ELBOW | PARALLEL PIPE END SECTION - PRECAST CONCRETE SECTION FOR 15" TO 24" STD. 310.02 | CROSS PIPE END SECTION - PRECAST CONCRETE SECTION FOR 18" TO 30" STD. 310.03 | BERM DITCH OUTLET STD. 850.10 (PER EACH) | BERM DITCH OUTLET STD. 850.11 (PER EACH) | CONC. COLLARS CL. "B" C.Y. STD. 840.72 | FLOWABLE FILL, C.Y. | CONC. & BRICK PLUG, C.Y. STD. 840.71 | PIPE REMOVAL LIN. FT. | REMARKS |
|---|---|---|---

Docusign Envelope ID: 89DA0246-5698-4053-BB60-AE753ECDB5AC

R0246821

COMPUTED BY: CMB	DATE: 5/4/2022	PROJECT NO. U-5906	SHEET NO. 3D-3
CHECKED BY: ARV	DATE: 8/27/2025		

NORTH CAROLINA DEPARTMENT OF TRANSPORTATION
DIVISION OF HIGHWAYS

Note: Invert Elevations indicated are for Bid Purposes only and shall not be used for project construction stakeout. See "Standard Specifications For Roads and Structures, Section 300-5".

LIST OF PIPES, ENDWALLS, ETC. (FOR PIPES 48 INCHES & UNDER)

| LINE & STATION | OFFSET | STRUCTURE NUMBER FROM | STRUCTURE NUMBER TO | TOP ELEVATION FT. | INVERT ELEVATION FT. | INVERT ELEVATION FT. | MINIMUM REQUIRED SLOPE % | C.S. PIPE 12 THICKNESS OR GAUGE 0.064 | C.S. PIPE 15 THICKNESS OR GAUGE 0.064 | C.S. PIPE 18 THICKNESS OR GAUGE 0.064 | C.S. PIPE 24 THICKNESS OR GAUGE 0.079 | C.S. PIPE 30 THICKNESS OR GAUGE 0.079 | C.S. PIPE 36 THICKNESS OR GAUGE 0.109 | C.S. PIPE 42 THICKNESS OR GAUGE 0.109 | C.S. PIPE 48 THICKNESS OR GAUGE 0.109 | R.C. PIPE CLASS III 12 | R.C. PIPE CLASS III 15 | R.C. PIPE CLASS III 18 | R.C. PIPE CLASS III 24 | R.C. PIPE CLASS III 30 | R.C. PIPE CLASS III 36 | R.C. PIPE CLASS III 42 | R.C. PIPE CLASS III 48 | R.C. PIPE CLASS IV 12 | R.C. PIPE CLASS IV 15 | R.C. PIPE CLASS IV 18 | R.C. PIPE CLASS IV 24 | R.C. PIPE CLASS IV 30 | R.C. PIPE CLASS IV 36 | R.C. PIPE CLASS IV 42 | R.C. PIPE CLASS IV 48 | R.C. PIPE CLASS V 12 | R.C. PIPE CLASS V 15 | R.C. PIPE CLASS V 18 | R.C. PIPE CLASS V 24 | R.C. PIPE CLASS V 30 | R.C. PIPE CLASS V 36 | R.C. PIPE CLASS V 42 | R.C. PIPE CLASS V 48 | ENDWALLS STD. 838.01 OR STD. 838.11 (UNLESS OTHERWISE NOTED) CY | REINFORCED ENDWALLS CY | MASONRY DRAINAGE STRUCTURE CY | 15" SIDE DRAIN PIPE | 18" SIDE DRAIN PIPE | ENDWALLS STD. 838.01 OR STD. 838.11 OR STD. 838.80 (UNLESS NOTED OTHERWISE) CU. YARDS R.C.P. | ENDWALLS STD. 838.01 OR STD. 838.11 OR STD. 838.80 (UNLESS NOTED OTHERWISE) CU. YARDS C.S.P. | QUANTITIES FOR DRAINAGE STRUCTURES *TOTAL L.F. FOR PAY QUANTITY SHALL BE COL. 'A' + (1.3 X COL.'B') PER EACH (1' THRU 5.0') | QUANTITIES FOR DRAINAGE STRUCTURES LIN.FT. A 5.0' THRU 10.0' | QUANTITIES FOR DRAINAGE STRUCTURES LIN.FT. B 10.0' AND ABOVE | C.B. STD. 840.01 OR STD. 840.02 | FRAME, GRATES, AND HOOD STANDARD 840.03 TYPE OF GRATE E | FRAME, GRATES, AND HOOD STANDARD 840.03 TYPE OF GRATE F | FRAME, GRATES, AND HOOD STANDARD 840.03 TYPE OF GRATE G | CONCRETE TRANSITIONAL SECTION D.I. STD. 852.04 OR STD. 852.06 | CONCRETE TRANSITIONAL SECTION C.B. STD. 852.05 | D.I. STD. 840.14 OR STD. 840.15 | D.I. FRAME AND GRATE STD. 840.16 | G.D.I. TYPE "A" STD. 840.17 OR 840.26 | G.D.I. TYPE "B" STD. 840.18 OR 840.27 | G.D.I. TYPE "D" STD. 840.19 OR 840.28 | T.B. G.D.I. (W.S. FLAT) FRAME W/ 2 GRATES STD. 840.29 | G.D.I. (W.S. SAG) FRAME W/ 2 GRATES STD. 840.20 | G.D.I. (W.S. SAG) FRAME W/ 2 GRATES STD. 840.22 | G.D.I. (W.S. SAG) FRAME W/ 3 GRATES STD. 840.22 | G.D.I. (N.S. SAG) FRAME W/ 2 GRATES STD. 840.24 | J.B. STD. 840.31 OR 840.32 | T.B. J.B. STD. 840.34 | T.B.G.D.I. STD. 840.35 | STEEL FRAME AND TWO GRATES STD. 840.37 | STEEL FRAME AND GRATE STD. 840.37 | M.H. STD. 840.51, STD. 840.52, OR STD.53 | M.H. FRAME AND COVER STD. 840.54 | CONVERT EXISTING D.I. TO C.B. | CONVERT EXISTING C.B. TO J.B. w/MH | CONVERT EXISTING D.I. TO J.B. w/MH | CONVERT EXISTING J.B. TO 2 G.I. | CONVERT C.B. TO D.I. | ADJUST EXISTING MANHOLE | ADJUST EXISTING C.B. | ADJUST D.I. | ADJUST 2DI | 15" C.S. ELBOW | 18" C.S. ELBOW | 24" C.S. ELBOW | 30" C.S. ELBOW | 36" C.S. ELBOW | PARALLEL PIPE END SECTION - PRECAST CONCRETE SECTION FOR 15" TO 24" STD. 310.02 | CROSS PIPE END SECTION - PRECAST CONCRETE SECTION FOR 18" TO 24" STD. 310.03 | BERM DITCH OUTLET STD. 850.10 (PER EACH) | BERM DITCH OUTLET STD. 850.11 (PER EACH) | CONC. COLLARS CL. "B" C.Y. STD. 840.72 | FLOWABLE FILL, C.Y. | CONC. & BRICK PLUG, C.Y. STD. 840.71 | PIPE REMOVAL LIN. FT. | REMARKS |
|---|---|---|---

Docusign Envelope ID: 89DA0246-5698-4053-BB60-AE753ECDB5AC

R0246821

COMPUTED BY:	CMB	DATE:	5/4/2022
CHECKED BY:	ARV	DATE:	8/27/2025

NORTH CAROLINA DEPARTMENT OF TRANSPORTATION
DIVISION OF HIGHWAYS

PROJECT NO.	SHEET NO.
U-5906	3D-4

Note: Invert Elevations indicated are for Bid Purposes only and shall not be used for project construction stakeout. See "Standard Specifications For Roads and Structures, Section 300-5".

LIST OF PIPES, ENDWALLS, ETC. (FOR PIPES 48 INCHES & UNDER)

| LINE & STATION | OFFSET | STRUCTURE NUMBER FROM | STRUCTURE NUMBER TO | TOP ELEVATION Ft. | INVERT ELEVATION Ft. | INVERT ELEVATION Ft. | MINIMUM REQUIRED SLOPE % | C.S. PIPE 12 THickness or Gauge 0.064 | C.S. PIPE 15 0.064 | C.S. PIPE 18 0.064 | C.S. PIPE 24 0.064 | C.S. PIPE 30 0.079 | C.S. PIPE 36 0.079 | C.S. PIPE 42 0.109 | C.S. PIPE 48 0.109 | R.C. PIPE CLASS III 12 | R.C. PIPE CLASS III 15 | R.C. PIPE CLASS III 18 | R.C. PIPE CLASS III 24 | R.C. PIPE CLASS III 30 | R.C. PIPE CLASS III 36 | R.C. PIPE CLASS III 42 | R.C. PIPE CLASS III 48 | R.C. PIPE CLASS IV 12 | R.C. PIPE CLASS IV 15 | R.C. PIPE CLASS IV 18 | R.C. PIPE CLASS IV 24 | R.C. PIPE CLASS IV 30 | R.C. PIPE CLASS IV 36 | R.C. PIPE CLASS IV 42 | R.C. PIPE CLASS IV 48 | R.C. PIPE CLASS V 12 | R.C. PIPE CLASS V 15 | R.C. PIPE CLASS V 18 | R.C. PIPE CLASS V 24 | R.C. PIPE CLASS V 30 | R.C. PIPE CLASS V 36 | R.C. PIPE CLASS V 42 | R.C. PIPE CLASS V 48 | ENDWALLS STD. 838.01 OR STD.838.11 (UNLESS OTHERWISE NOTED) CY | REINFORCED ENDWALLS CY | MASONRY DRAINAGE STRUCTURE CY | 15" SIDE DRAIN PIPE | 18" SIDE DRAIN PIPE | ENDWALLS STD. 838.01 838.11 OR STD. 838.80 (UNLESS NOTED OTHERWISE) CU. YARDS R.C.P. | CU. YARDS C.S.P. | QUANTITIES FOR DRAINAGE STRUCTURES *TOTAL L.F. FOR PAY QUANTITY SHALL BE COL. 'A' + (1.3 X COL.'B') PER EACH (0' THRU 5.0') | LIN.FT. A 5.0' THRU 10.0' | LIN.FT. B 10.0' AND ABOVE | C.B. STD. 840.01 OR STD. 840.02 | FRAME, GRATES, AND HOOD STANDARD 840.03 TYPE OF GRATE E | F | G | CONCRETE TRANSITIONAL SECTION D.I. STD. 852.04 OR STD. 852.06 | C.B. STD. 852.05 | D.I. STD. 840.14 OR STD. 840.15 | D.I. FRAME AND GRATE STD. 840.16 | G.D.I. TYPE "A" STD. 840.17 OR 840.26 | G.D.I. TYPE "B" STD. 840.18 OR 840.27 | G.D.I. TYPE "D" STD. 840.19 OR 840.28 | T.B. G.D.I. (W.S. FLAT) FRAME W/ 2 GRATES STD. 840.29 | G.D.I. (W.S. SAG) FRAME W/ 2 GRATES STD. 840.20 | G.D.I. (W.S. SAG) FRAME W/ 2 GRATES STD. 840.22 | G.D.I. (W.S. SAG) FRAME W/ 3 GRATES STD. 840.22 | G.D.I. (N.S. SAG) FRAME W/ 2 GRATES STD. 840.24 | J.B. STD. 840.31 OR 840.32 | T.B. J.B. STD. 840.34 | T.B. G.D.I. STD. 840.35 | STEEL FRAME AND TWO GRATES STD. 840.37 | STEEL FRAME AND GRATE STD. 840.37 | M.H. STD. 840.51, STD. 840.52, OR STD.53 | M.H. FRAME AND COVER STD. 840.54 | CONVERT EXISTING D.I. TO C.B. | CONVERT EXISTING C.B. TO J.B. w/MH | CONVERT EXISTING D.I. TO J.B. w/MH | CONVERT EXISTING J.B. TO 2 C.I. | CONVERT C.B. TO D.I. | ADJUST EXISTING MANHOLE | ADJUST EXISTING C.B. | ADJUST D.I. | ADJUST 2DI | 15" C.S. ELBOW | 18" C.S. ELBOW | 24" C.S. ELBOW | 30" C.S. ELBOW | 36" C.S. ELBOW | PARALLEL PIPE END SECTION - PRECAST CONCRETE SECTION FOR 15" TO 24" STD. 310.02 | CROSS PIPE END SECTION - PRECAST CONCRETE SECTION FOR 18" TO 30" STD. 310.03 | BERM DITCH OUTLET STD. 858.10 (PER EACH) | BERM DITCH OUTLET STD. 858.11 (PER EACH) | CONC. COLLARS CL. "B" C.Y. STD. 840.72 | FLOWABLE FILL, C.Y. | CONC. & BRICK PLUG, C.Y. STD. 840.71 | PIPE REMOVAL LIN. FT. | REMARKS |
|---|---|---|---