Docusign Envelope ID: A67EE47E-C60F-4862-942C-F096D74229D6

PROJECT REFERENCE NO.	SHEET NO.
R-5600	Sig-39.2

FLASHER CIRCUIT MODIFICATION DETAIL

IN ORDER TO INSURE THAT SIGNALS FLASH CONCURRENTLY ON THE SAME APPROACH, MAKE THE FOLLOWING FLASHER CIRCUIT CHANGES:

1. ON REAR OF PDA - REMOVE WIRE FROM TERM. T2-4 AND TERMINATE ON T2-2.
2. ON REAR OF PDA - REMOVE WIRE FROM TERM. T2-5 AND TERMINATE ON T2-3.
3. REMOVE FLASHER UNIT 2.

THE CHANGES LISTED ABOVE TIES ALL PHASES AND OVERLAPS TO FLASHER UNIT 1.

MAXTIME OVERLAP PROGRAMMING DETAIL

Front Panel
Main Menu >Controller >Overlap >Overlap Parameters/Overlap Timings

Web Interface
Home >Controller >Overlap Configuration >Overlaps

Overlap Plan 1

Overlap	3	4	6
Type	FYA 4 - Section	FYA 4 - Section	NORMAL
Included Phases	-	4,5	2
Modifier Phases	5	-	-
Modifier Overlap	-	-	-
Trail Green	0	0	0
Trail Yellow	0.0	0.0	0.0
Trail Red	0.0	0.0	0.0

OUTPUT CHANNEL CONFIGURATION

Front Panel
Main Menu >Controller >More>Channels>Channels Config

Web Interface
Home >Controller >Advanced IO>Channels>Channel Configuration

Channel Configuration

NOTICE OVERLAP 7 ASSIGNED TO CHANNEL 3

Channel	Control Type	Control Source	Flash Yellow	Flash Red	Flash Alt	MMU Channel
1	Phase Vehicle	1		X	X	1
2	Phase Vehicle	2		X		2
3	Overlap	7		X	X	3
4	Phase Vehicle	4		X		4
5	Phase Vehicle	5		X		5
6	Phase Vehicle	6		X	X	6
7	Phase Vehicle	7		X		7
8	Phase Vehicle	8		X	X	8
9	Overlap	1		X	X	9
10	Overlap	2		X	X	10
11	Overlap	3		X		11
12	Overlap	4		X		12
13	Phase Ped	2				13
14	Phase Ped	4				14
15	Phase Ped	6				15
16	Phase Ped	8				16
17	Overlap	5		X	X	17
18	Overlap	6		X		18

NNOTICE FLASHING RED

MAXTIME STARTUP AND SOFTWARE FLASH PROGRAMMING DETAIL

Front Panel
Main Menu>Controller>Unit

Web Interface
Home>Controller>Unit

Start Up Parameters

Startup Clearance Hold
6

Unit Flash Parameters

All Red Flash Exit Time
6

THIS ELECTRICAL DETAIL IS FOR
THE SIGNAL DESIGN: 14-0790T2
DESIGNED: Oct 2025
SEALED: 10/1/2025
REVISED: N/A

Plans Prepared By:

DRMP, INC.
8210 UNIVERSITY EXECUTIVE PARK DR.
SUITE 220
CHARLOTTE, NC 28262
NC LICENSE NO. F-1524 (704) 549-4260

Electrical Detail - Sheet 2 of 2
Temporary Design 2 - TMP Ph1, S1A

DOCUMENT NOT CONSIDERED FINAL UNLESS ALL SIGNATURES COMPLETED

ELECTRICAL AND PROGRAMMING DETAILS FOR:

NC 107
at
SR 1724 (Fairview Road) /
CVS Driveway

Division 14 Jackson County Sylva

PLAN DATE:	October 2025	REVIEWED BY:	ZM Esposito
PREPARED BY:	DS Griffith	REVIEWED BY:	BN Groome

REVISIONS	INIT.	DATE

750 N.Greenfield Pkwy,Garner,NC 27529

SEAL
NORTH CAROLINA PROFESSIONAL SEAL 052936 ENGINEER BRITTANY N GROOME

Signed by: Brittany Groome 1E09340E1094484...
10/1/2025
DATE

SIG. INVENTORY NO. 14-0790T2

1-OCT-2025 12:25
pw:\\pwdenver.bentley.com:PWDR_US_East_01/Documents/NCDOT/NCDOT_Western_Div_Dn-Coll_MC/NCDOT_6170_R5600_NC170_US33BUS/6.0_CAD_BIM/6.2_Work_In_Progress/R-5600 NCDOT File Structure/Traffic/Signals/Design/Signal Management/14-0790/14-0790T2_sample_2025mmds.dgn
Fernando.Vazquez AT CHA-FVAZQUEZ

Docusign Envelope ID: A67EE47E-C60F-4862-942C-F096D74229D6

PROJECT REFERENCE NO.	SHEET NO.
R-5600	Sig-40.0

PHASING DIAGRAM

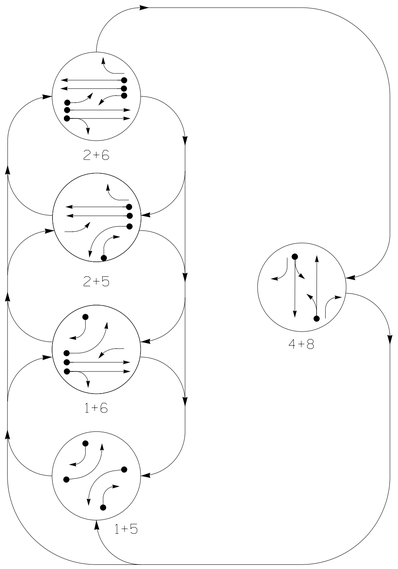

PHASING DIAGRAM DETECTION LEGEND

- DETECTED MOVEMENT
- UNDETECTED MOVEMENT (OVERLAP)
- UNSIGNALIZED MOVEMENT
- PEDESTRIAN MOVEMENT

TABLE OF OPERATION

SIGNAL FACE	PHASE 1+5	1+6	2+5	2+6	4+8	FLASH
11	←	←	F Y	F Y	←R	←R
21, 22	R	R	G	G	R	R
23	R	R	F Y →	F Y →	R	R
41,42	R	R	R	R	G	R
43	F Y →	R	F Y →	R	F Y →	R
51	←	F Y	←	F Y	←R	←R
61, 62	R	G	R	G	R	R
81,82	R	R	R	R	G	R
83	→	→	R	R	F Y →	R

SIGNAL FACE I.D.

All Heads L.E.D.

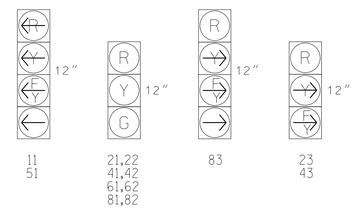

MAXTIME DETECTOR INSTALLATION CHART

DETECTOR					PROGRAMMING						
LOOP	SIZE (FT)	DISTANCE FROM STOPBAR (FT)	TURNS	NEW LOOP	CALL PHASE	DELAY TIME	EXTEND TIME	EXTEND	ADDED INITIAL	CALL	DELAY DURING GREEN	NEW CARD
1A	6X40	0	*	*	1	15.0	-	X	-	X	-	*
					6	-	-	X	-	X	-	*
1B	*	0	*	X	1	15.0	-	X	-	X	-	*
4A	*	0	*	X	4	5.0	-	X	-	X	-	*
5A	6X40	0	*	*	5	15.0	-	X	-	X	-	*
					2	-	-	X	-	X	-	*
5B	*	0	*	X	5	15.0	-	X	-	X	-	*
8A	*	0	*	X	8	5.0	-	X	-	X	-	*

* Multi-Zone Microwave Detection Zone

5 Phase
Fully Actuated
(Time Based Coordination)

NOTES

1. Refer to "Roadway Standard Drawings NCDOT" dated January 2024 and "Standard Specifications for Roads and Structures" dated January 2024.
2. Do not program signal for late night flashing operation unless otherwise directed by the Engineer.
3. Phase 1 and/or phase 5 may be lagged.
4. Reconnect and unbag existing signal heads 11,21,22,61,62, and 83.
5. Unbag existing No U-turn sign (R3-4).
6. Set all detectors to presence mode.
7. This intersection uses multi-zone microwave detection. Install detectors according to the manufacturer's instructions to achieve the desired detection.
8. Maximum times shown in timing chart are for free-run operation only. Coordinated signal system timing values supersede these values.

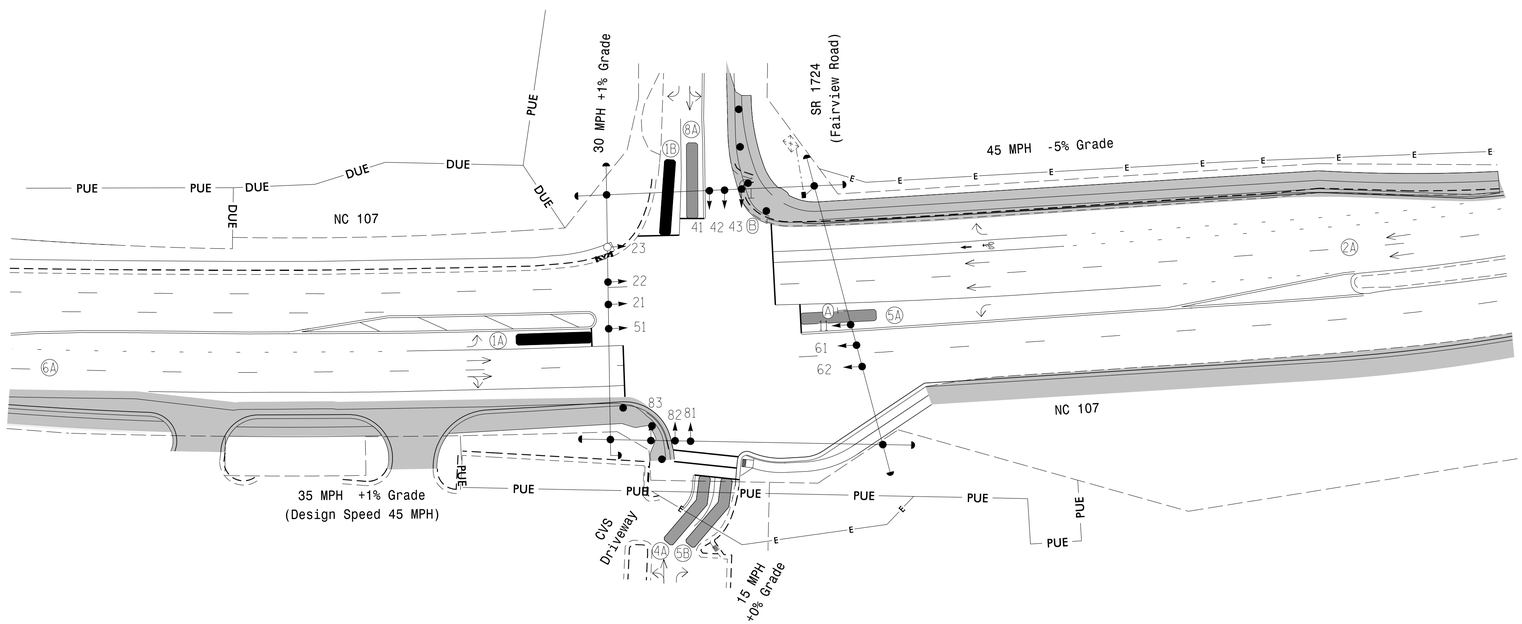

LEGEND

PROPOSED		EXISTING
	Traffic Signal Head	
	Modified Signal Head	N/A
	Sign	
	Pedestrian Signal Head With Push Button & Sign	
	Signal Pole with Guy	
	Signal Pole with Sidewalk Guy	
	Inductive Loop Detector	
	Controller & Cabinet	
	Junction Box	
	2-in Underground Conduit	
N/A	Right of Way	
	Directional Arrow	
	Non-Intrusive Detection Zone	
	Construction Zone	N/A
	Work Zone Drums	
N/A	Temporary Construction Easement	E
N/A	Permenant Utility Easement	PUE
N/A	Drainage Utility Easement	DUE
N/A	Barricade	
A	No U-Turn Sign Sign (R3-4)	A
B	Right Turn Yield to U-Turn Sign	B

MAXTIME TIMING CHART

FEATURE	PHASE 1	2	4	5	6	8
Walk *	–	–	–	–	–	–
Ped Clear *	–	–	–	–	–	–
Min Green	7	12	7	7	12	7
Passage *	2.0	2.0	2.0	2.0	2.0	2.0
Max 1 *	15	120	30	15	120	30
Yellow Change	3.0	5.0	3.1	3.1	5.0	3.1
Red Clear	2.9	2.1	4.5	2.6	2.1	4.5
Added Initial *	–	–	–	–	–	–
Maximum Initial *	–	–	–	–	–	–
Time Before Reduction *	–	–	–	–	–	–
Time To Reduce *	–	–	–	–	–	–
Minimum Gap	–	–	–	–	–	–
Advance Walk	–	–	–	–	–	–
Non Lock Detector	X	–	X	X	–	X
Vehicle Recall	–	MIN RECALL	–	–	MIN RECALL	–
Dual Entry	–	–	X	–	–	X

* These values may be field adjusted. Do not adjust Min Green and Extension times for phases 2 and 6 lower than what is shown. Min Green for all other phases should not be lower than 4 seconds.

Microwave Detection

	2A	6A
FUNCTION	Sensor 1	Sensor 2
Channel	1	1
Phase	2	6
Direction of Travel	NB	SB
Type	Priority	Priority
Level	2 / QUEUE	2 / QUEUE
Detection Zone (ft)	<750 / –	<750 / –
Range (ft)	600–100 / 150–100	600–100 / 150–100
Enable Speed	Y / Y	Y / Y
Speed Range (mph)	35–100 / 1–35	35–100 / 1–35
Enable Estimated Time of Arrival	Y / N	Y / N
Estimated Time of Arrival (sec)	2.5–6.5 / –	2.5–6.5 / –

Signal Upgrade
Temporary Design 3 - TMP Ph2, S1

DOCUMENT NOT CONSIDERED FINAL UNLESS ALL SIGNATURES COMPLETED

Plans Prepared By:

DRMP
DRMP, INC.
8210 UNIVERSITY EXECUTIVE PARK DR.
SUITE 220
CHARLOTTE, NC 28262
NC LICENSE NO. F-1524 (704) 549-4260

Prepared for: Transportation Mobility and Safety Division, Signal Design Section, State of North Carolina, Department of Transportation
750 N.Greenfield Pkwy,Garner,NC 27529

NC 107
at
SR 1724 (Fairview Road) /
CVS Driveway

Division 14 Jackson County Sylva

PLAN DATE:	October 2025	REVIEWED BY:	ZM Esposito
PREPARED BY:	DS Griffith	REVIEWED BY:	BN Groome

SCALE 0 40 1"=40'

REVISIONS	INIT.	DATE

SEAL
NORTH CAROLINA PROFESSIONAL SEAL 052936 ENGINEER BRITTANY N. GROOME
Signed by: Brittany Groome 1E09348E1594484...
10/1/2025
DATE

SIG. INVENTORY NO. I4-0790T3

1-OCT-2025 13:49
pw:\\Documents.bentley.com:PWB_US_East_01\Documents\NCDOT\NCDOT_Western_Div_On-Call_M_\NCDOT_6170_R5600_NC170_US23BUS\6.0_CAD_BIM\6.2_Work_In_Progress\R-5600 NCDOT File Structure\Traffic\Signals\Design\Signal Design\14-0790\14-0790T3_sig_dsn_2025mmdd.dgn
Fernando.Vazquez AT CHA-FVAZQUEZ

Docusign Envelope ID: A67EE47E-C60F-4862-942C-F096D74229D6

PROJECT REFERENCE NO.	SHEET NO.
R-5600	Sig-40.1

18 CHANNEL IP CONFLICT MONITOR PROGRAMMING DETAIL

(remove jumpers and set switches as shown)

REMOVE DIODE JUMPERS
1-3, 1-5, 1-6, 1-9, 1-10, 1-11, 1-12, 2-5, 2-6, 2-9, 2-11, 2-12, 2-18, 3-5, 3-6, 3-9, 3-10, 3-11, 3-12, 4-8, 4-10, 4-12, 5-9, 5-10, 5-11, 5-12, 5-18, 6-9, 6-10, 6-11, 6-18, 8-10, 8-12, 9-10, 9-11, 9-12, 9-18, 10-11, 10-12, 11-12, 11-18 AND 12-18.

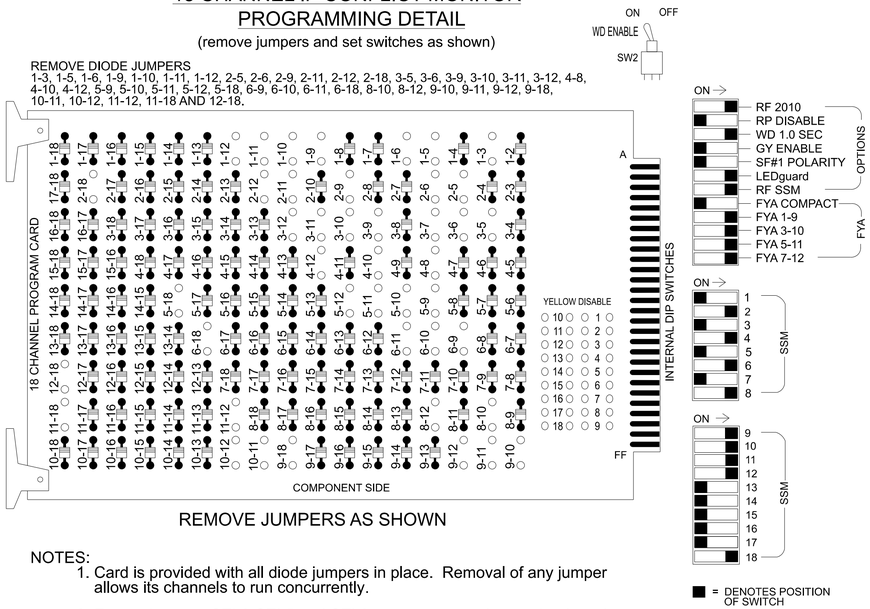

REMOVE JUMPERS AS SHOWN

NOTES:
1. Card is provided with all diode jumpers in place. Removal of any jumper allows its channels to run concurrently.
2. Ensure jumpers SEL2-SEL5 and SEL9 are present on the monitor board.
3. Ensure that the Red Enable is active at all times during normal operation.
4. Integrate monitor with Ethernet network in cabinet.

NOTES

1. To prevent "flash-conflict" problems, insert red flash program blocks for all vehicle load switches in the output file. The installer shall verify that signal heads flash in accordance with the signal plan.
2. Program phases 4 and 8 for Dual Entry.
3. If this signal will be managed by an ATMS software, enable controller and detector logging for all detectors used at this location.
4. Program controller to start up in phase 2 Green No Walk and 6 Green No Walk.
5. The cabinet and controller are part of the NC 107 Time Based System.

EQUIPMENT INFORMATION

Controller.....2070LX
Cabinet.....332 w/ Aux
Software.....Q-Free MAXTIME
Cabinet Mount.....Base
Output File Positions.....18 With Aux. Output File
Load Switches Used.....S1, S2, S4, S5, S7, S8, S11
AUX S1, AUX S2, AUX S4, AUX S5, AUX S6
Phases Used.....1, 2, 4, 5, 6, 8
Overlap "1".....*
Overlap "2".....*
Overlap "3".....*
Overlap "4".....*
Overlap "5".....NOT USED
Overlap "6".....*
Overlap "7".....*

*See overlap programming detail on sheet 2.

SIGNAL HEAD HOOK-UP CHART

LOAD SWITCH NO.	S1	S2	S3	S4	S5	S6	S7	S8	S9	S10	S11	S12	AUX S1	AUX S2	AUX S3	AUX S4	AUX S5	AUX S6
CMU CHANNEL NO.	1	2	13	3	4	14	5	6	15	7	8	16	9	10	17	11	12	18
PHASE	1	2	2 PED	OL7	4	4 PED	5	6	6 PED	7	8	8 PED	OL1	OL2	SPARE	OL3	OL4	OL6
SIGNAL HEAD NO.	11★	21,22	NU	83★	41,42	NU	51★	61,62	NU	NC	81,82	NU	11★	83★	NU	51★	43★	23★
RED		128			101			134			107			A124			A101	A104
YELLOW	*	129		*	102		*	135			108							
GREEN		130			103			136			109							
RED ARROW													A121			A114		
YELLOW ARROW													A122	A125		A115	A102	A105
FLASHING YELLOW ARROW													A123	A126		A116	A103	A106
GREEN ARROW	127			118			133											
✋																		
🚶																		

NU = Not Used NC = Not Connected
* Denotes install load resistor. See load resistor installation detail this sheet.
★ See pictorial of head wiring in detail this sheet.

FYA SIGNAL WIRING DETAIL

(wire signal heads as shown)

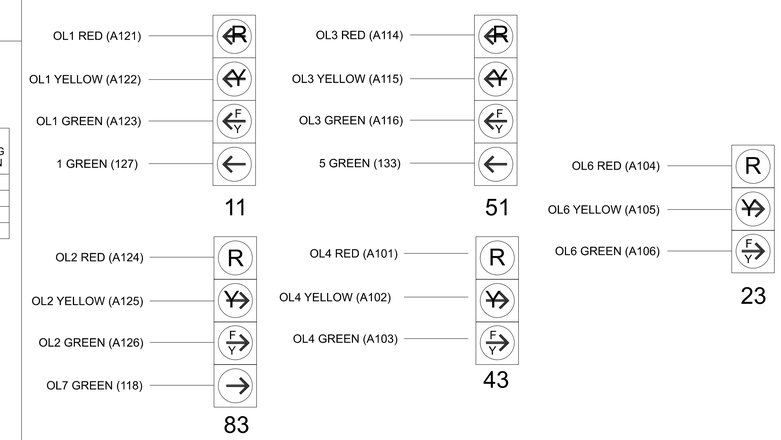

INPUT FILE POSITION LAYOUT

(front view)

		1	2	3	4	5	6	7	8	9	1O	11	12	13	14
FILE "I"	U	Ø 1 1A	SLOT EMPTY	SLOT EMPTY	SLOT EMPTY	SLOT EMPTY	SLOT EMPTY	SLOT EMPTY	SLOT EMPTY	SLOT EMPTY	SLOT EMPTY	SLOT EMPTY	SLOT EMPTY	SLOT EMPTY	FS DC ISOLATOR
	L	NOT USED													ST DC ISOLATOR
FILE "J"	U	Ø 5 5A	SLOT EMPTY	SLOT EMPTY	SLOT EMPTY	SLOT EMPTY	SLOT EMPTY	SLOT EMPTY	SLOT EMPTY	SLOT EMPTY	SLOT EMPTY	SLOT EMPTY	SLOT EMPTY	SLOT EMPTY	SLOT EMPTY
	L	NOT USED													

EX. : 1A, 2A, ETC. = LOOP NO.'S

FS = FLASH SENSE
ST = STOP TIME

Note: For Detection Zones 1A and 5A the equipment and slots reserved are typical for a NCDOT installation.

INPUT FILE CONNECTION & PROGRAMMING CHART

LOOP NO.	LOOP TERMINAL	INPUT FILE POS.	PIN NO.	INPUT POINT	DETECTOR NO.	CALL PHASE	DELAY TIME	EXTEND TIME	EXTEND	ADDED INITIAL	CALL	DELAY DURING GREEN
1A	TB2-1,2	I1U	56	18	1	1	15.0		X		X	
				-	29	6			X		X	
5A	TB3-1,2	J1U	55	17	15	5	15.0		X		X	
				-	31	2			X		X	

INPUT FILE POSITION LEGEND: J2L
FILE J
SLOT 2
LOWER

LOAD RESISTOR INSTALLATION DETAIL

(install resistors as shown)

ACCEPTABLE VALUES	
Value (ohms)	Wattage
1.5K - 1.9K	25W (min)
2.0K - 3.0K	10W (min)

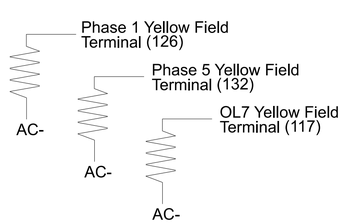

SPECIAL DETECTOR NOTE

1. Install a multi-zone microwave detection system for vehicle detection. Perform installation according to manufacturer's directions and NCDOT engineer -approved mounting locations to accomplish the detection schemes shown on the Signal Design Plans.
2. For Detection Zones 1A and 5A, the equipement placement is typical for a NCDOT installation.

Plans Prepared By:

DRMP
DRMP, INC.
8210 UNIVERSITY EXECUTIVE PARK DR.
SUITE 220
CHARLOTTE, NC 28262
NC LICENSE NO. F-1524 (704) 549-4260

THIS ELECTRICAL DETAIL IS FOR
THE SIGNAL DESIGN: 14-0790T3
DESIGNED: Oct 2025
SEALED: 10/1/2025
REVISED: N/A

Electrical Detail - Sheet 1 of 2
Temporary Design 3 - TMP Ph2, S1

DOCUMENT NOT CONSIDERED FINAL UNLESS ALL SIGNATURES COMPLETED

ELECTRICAL AND PROGRAMMING DETAILS FOR:

NC 107
at
SR 1724 (Fairview Road) /
CVS Driveway

Division 14 Jackson County Sylva

PLAN DATE:	October 2025	REVIEWED BY:	ZM Esposito
PREPARED BY:	DS Griffith	REVIEWED BY:	BN Groome

REVISIONS	INIT.	DATE

750 N.Greenfield Pkwy,Garner,NC 27529

SEAL 052936 NORTH CAROLINA PROFESSIONAL ENGINEER BRITTANY N GROOME

Signed by: Brittany Groome 1E09340E1094484... 10/1/2025 DATE

SIG. INVENTORY NO. 14-0790T3

1-OCT-2025 12:26
pw:\\pwdenver.bentley.com:PWDR_US_East_01\Documents\NCDOT\NCDOT_Western_Div_On-Call_ML_\NCDOT_6170_R5600_NC170_US23BUS\6.0_CAD_BIM\6.2_Work_In_Progress\R-5600 NCDOT File Structure\Traffic\Signals\Design\Signal Management\14-0790\14-0790T3_sm_ele_2025mmdd.dgn
Fernando.Vazquez AT CHA\FVAZQUEZ

Docusign Envelope ID: A67EE47E-C60F-4862-942C-F096D74229D6

MAXTIME OVERLAP PROGRAMMING DETAIL

Front Panel
Main Menu >Controller >Overlap >Overlap Parameters/Overlap Timings

Web Interface
Home >Controller >Overlap Configuration >Overlaps

Overlap Plan 1

Overlap	1	2	3	4	6	7
Type	FYA 4 - Section	FYA 4 - Section	FYA 4 - Section	FYA 4 - Section	FYA 4 - Section	Normal
Included Phases	2	8	6	4,5	2	1
Modifier Phases	1	1	5	-	-	-
Modifier Overlap	-	-	-	-	-	-
Trail Green	0	0	0	0	0	0
Trail Yellow	0.0	0.0	0.0	0.0	0.0	0.0
Trail Red	0.0	0.0	0.0	0.0	0.0	0.0

MAXTIME STARTUP AND SOFTWARE FLASH PROGRAMMING DETAIL

Front Panel
Main Menu>Controller>Unit

Web Interface
Home>Controller>Unit

Start Up Parameters

Startup Clearance Hold
6

Unit Flash Parameters

All Red Flash Exit Time
6

OUTPUT CHANNEL CONFIGURATION

Front Panel
Main Menu >Controller >More>Channels>Channels Config

Web Interface
Home >Controller >Advanced IO>Channels>Channel Configuration

Channel Configuration

NOTICE OVERLAP 7 ASSIGNED TO CHANNEL 3 →

Channel	Control Type	Control Source	Flash Yellow	Flash Red	Flash Alt	MMU Channel
1	Phase Vehicle	1		X	X	1
2	Phase Vehicle	2		X		2
3	Overlap	7		X	X	3
4	Phase Vehicle	4		X		4
5	Phase Vehicle	5		X		5
6	Phase Vehicle	6		X	X	6
7	Phase Vehicle	7		X		7
8	Phase Vehicle	8		X	X	8
9	Overlap	1		X	X	9
10	Overlap	2		X	X	10
11	Overlap	3		X		11
12	Overlap	4		X		12
13	Phase Ped	2				13
14	Phase Ped	4				14
15	Phase Ped	6				15
16	Phase Ped	8				16
17	Overlap	5		X	X	17
18	Overlap	6		X		18

↑ NOTICE FLASHING RED

FLASHER CIRCUIT MODIFICATION DETAIL

IN ORDER TO INSURE THAT SIGNALS FLASH CONCURRENTLY ON THE SAME APPROACH, MAKE THE FOLLOWING FLASHER CIRCUIT CHANGES:

1. ON REAR OF PDA - REMOVE WIRE FROM TERM. T2-4 AND TERMINATE ON T2-2.
2. ON REAR OF PDA - REMOVE WIRE FROM TERM. T2-5 AND TERMINATE ON T2-3.
3. REMOVE FLASHER UNIT 2.

THE CHANGES LISTED ABOVE TIES ALL PHASES AND OVERLAPS TO FLASHER UNIT 1.

THIS ELECTRICAL DETAIL IS FOR
THE SIGNAL DESIGN: 14-0790T3
DESIGNED: Oct 2025
SEALED: 10/1/2025
REVISED: N/A

Plans Prepared By:

DRMP
DRMP, INC.
8210 UNIVERSITY EXECUTIVE PARK DR.
SUITE 220
CHARLOTTE, NC 28262
NC LICENSE NO. F-1524 (704) 549-4260

Electrical Detail - Sheet 2 of 2
Temporary Design 3 - TMP Ph2, S1

DOCUMENT NOT CONSIDERED FINAL UNLESS ALL SIGNATURES COMPLETED

ELECTRICAL AND PROGRAMMING DETAILS FOR:

NC 107
at
SR 1724 (Fairview Road) /
CVS Driveway

Division 14 Jackson County Sylva

PLAN DATE:	October 2025	REVIEWED BY:	ZM Esposito
PREPARED BY:	DS Griffith	REVIEWED BY:	BN Groome

REVISIONS	INIT.	DATE

750 N.Greenfield Pkwy,Garner,NC 27529

SEAL
NORTH CAROLINA PROFESSIONAL SEAL 052936 ENGINEER BRITTANY N. GROOME

Signed by: Brittany Groome 1E09340E1594484...
10/1/2025
DATE

SIG. INVENTORY NO. 14-0790T3

1-OCT-2025 12:26
pw:\\pwdenv01:ADR_US_East_01\Documents\NCDOT\NCDOT_Western_Div_On-Call_MC\NCDOT_6170_R5600_NC170_US23BUS\6.0_CAD_BIM\6.2_Work_In_Progress\R-5600 NCDOT File Structure\Traffic\Signals\Design\Signal Management\14-0790\14-0790T3_sm_ele_2025mmdd.dgn
Fernando.Vazquez AT CH4-FVA2QUEZ

Docusign Envelope ID: EDBF09DE-B24D-4F89-928A-48F3924CA521

PROJECT REFERENCE NO.	SHEET NO.
R-5600	Sig-41.0

PHASING DIAGRAM

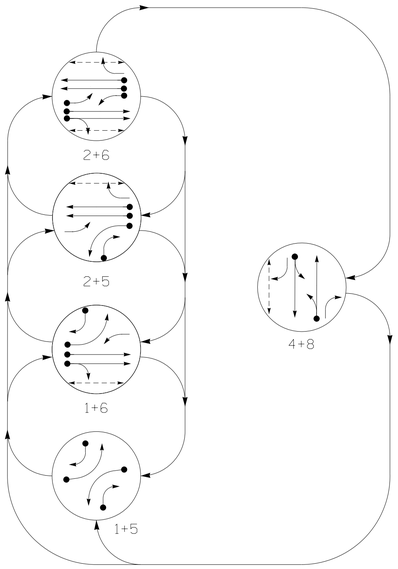

PHASING DIAGRAM DETECTION LEGEND

- DETECTED MOVEMENT
- UNDETECTED MOVEMENT (OVERLAP)
- UNSIGNALIZED MOVEMENT
- PEDESTRIAN MOVEMENT

TABLE OF OPERATION

SIGNAL FACE	PHASE 1+5	1+6	2+5	2+6	4+8	FLASH
11	←	←	F↓	F↓	←R	←R
21, 22	R	R	G	G	R	R
23	R	R	F→	F→	R	R
41,42	R	R	R	R	G	R
43	F→	R	F→	R	F→	R
51	←	F↓	←	F↓	←R	←R
61, 62	R	G	R	G	R	R
81,82	R	R	R	R	G	R
83	→	→	R	R	F→	R
P21, P22	DW	DW	W	W	DW	DRK
P61, P62	DW	W	DW	W	DW	DRK
P81, P82	DW	DW	DW	DW	W	DRK

SIGNAL FACE I.D.

All Heads L.E.D.

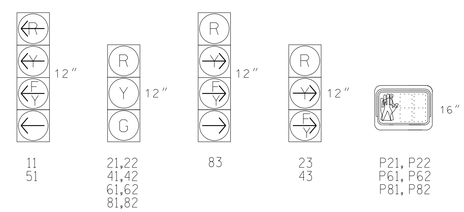

MAXTIME DETECTOR INSTALLATION CHART

DETECTOR					PROGRAMMING						
LOOP	SIZE (FT)	DISTANCE FROM STOPBAR (FT)	TURNS	NEW LOOP	CALL PHASE	DELAY TIME	EXTEND TIME	EXTEND	ADDED INITIAL	CALL	DELAY DURING GREEN	NEW CARD
1A	6X40	0	*	*	1	15.0	-	X	-	X	-	*
					6	-	-	X	-	X	-	*
1B	*	0	*	X	1	15.0	-	X	-	X	-	*
4A	*	0	*	X	4	5.0	-	X	-	X	-	*
5A	6X40	0	*	*	5	15.0	-	X	-	X	-	*
					2	-	-	X	-	X	-	*
5B	*	0	*	X	5	15.0	-	X	-	X	-	*
8A	*	0	*	X	8	5.0	-	X	-	X	-	*

* Multi-Zone Microwave Detection Zone

5 Phase
Fully Actuated
(Time Based Coordination)

NOTES

1. Refer to "Roadway Standard Drawings NCDOT" dated January 2024 and "Standard Specifications for Roads and Structures" dated January 2024.
2. Do not program signal for late night flashing operation unless otherwise directed by the Engineer.
3. Phase 1 and/or phase 5 may be lagged.
4. Reposition existing signal heads numbered 11, 21, 22, 23, 41, 42, 43, 51, 61 and 62.
5. Set all detectors to presence mode.
6. Omit "WALK" and flashing "DON'T WALK" with no pedestrian calls.
7. Program pedestrian heads to countdown the flashing "Don't Walk" time only.
8. To provide a leading pedestrian interval on Phase 2, program FYA heads numbered 11 and 23 to delay for 7 seconds after the start of the phase 2 walk interval. See Electrical Details for programming.
9. This intersection uses multi-zone microwave detection. Install detectors according to the manufacturer's instructions to achieve the desired detection.
10. Maximum times shown in timing chart are for free-run operation only. Coordinated signal system timing values supersede these values.

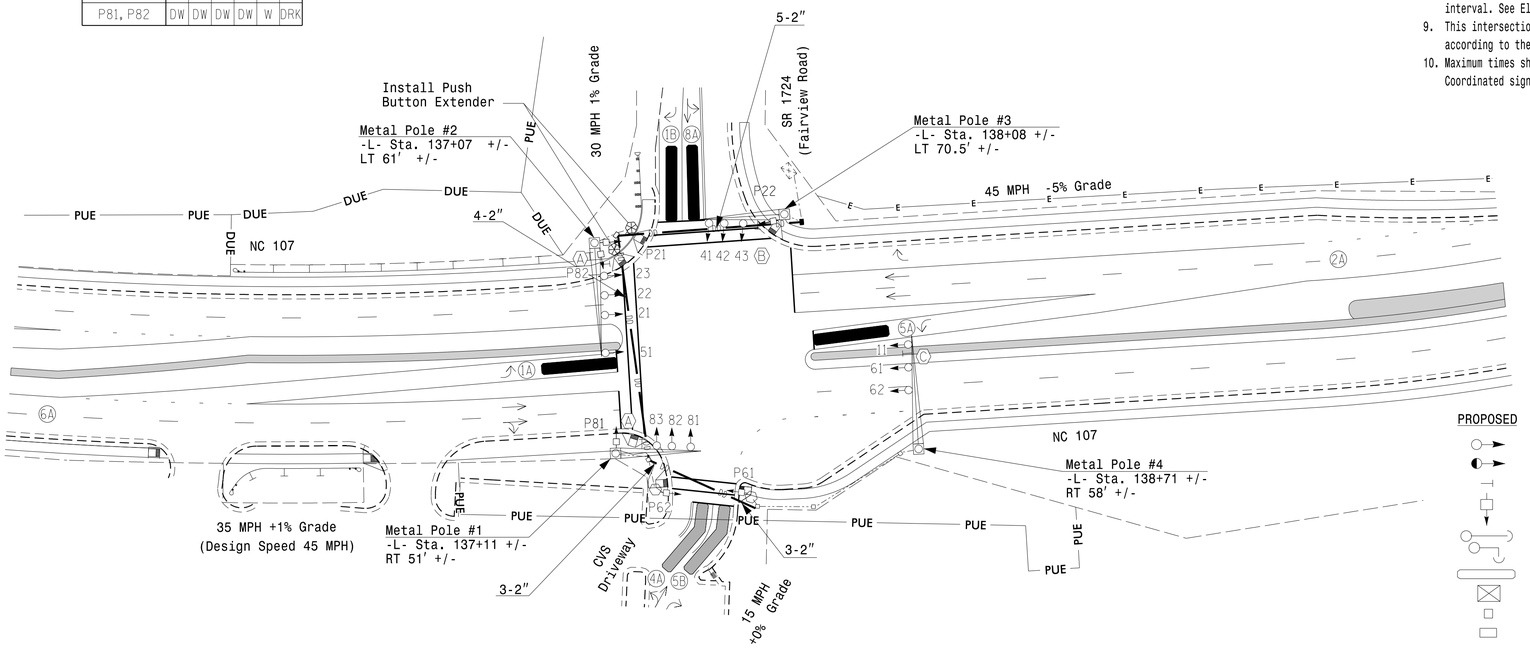

LEGEND

PROPOSED		EXISTING
	Traffic Signal Head	
	Modified Signal Head	N/A
	Sign	
	Pedestrian Signal Head With Push Button & Sign	
	Signal Pole with Guy	
	Signal Pole with Sidewalk Guy	
	Inductive Loop Detector	
	Controller & Cabinet	
	Junction Box	
	Oversized Junction Box	
	2-in Underground Conduit	
N/A	Right of Way	
	Directional Arrow	
	Type II Signal Pedestal	
	Non-Intrusive Detection Zone	
	Construction Zone	N/A
N/A	Temporary Construction Easement	E
N/A	Permenant Utility Easement	PUE
N/A	Drainage Utility Easement	DUE
A	"RIGHT TURN SIGNAL" Sign (R10-10R)	A
B	Right Turn Yield to U-Turn Sign	B
C	No U-Turn Sign (R3-4)	C

MAXTIME TIMING CHART

FEATURE	PHASE 1	2	4	5	6	8
Walk *	–	14	–	–	12	14
Ped Clear *	–	15	–	–	8	23
Min Green	7	12	7	7	12	7
Passage *	2.0	2.0	2.0	2.0	2.0	2.0
Max 1 *	15	120	30	15	120	30
Yellow Change	3.0	5.0	3.5	3.1	5.0	3.5
Red Clear	2.9	2.1	4.7	3.3	2.1	4.7
Added Initial *	–	–	–	–	–	–
Maximum Initial *	–	–	–	–	–	–
Time Before Reduction *	–	–	–	–	–	–
Time To Reduce *	–	–	–	–	–	–
Minimum Gap	–	–	–	–	–	–
Advance Walk	–	**	–	–	5	7
Non Lock Detector	X	–	X	X	–	X
Vehicle Recall	–	MIN RECALL	–	–	MIN RECALL	–
Dual Entry	–	–	X	–	–	X

* These values may be field adjusted. Do not adjust Min Green and Extension times for phases 2 and 6 lower than what is shown. Min Green for all other phases should not be lower than 4 seconds.
** See note #8

Microwave Detection

	(2A)		(6A)	
FUNCTION	Sensor 1		Sensor 2	
Channel	1		1	
Phase	2		6	
Direction of Travel	NB		SB	
Type	Priority		Priority	
Level	2	QUEUE	2	QUEUE
Detection Zone (ft)	<750	–	<750	–
Range (ft)	600–100	150–100	600–100	150–100
Enable Speed	Y	Y	Y	Y
Speed Range (mph)	35–100	1–35	35–100	1–35
Enable Estimated Time of Arrival	Y	N	Y	N
Estimated Time of Arrival (sec)	2.5–6.5	–	2.5–6.5	–

Signal Upgrade
Temporary Design 4 - TMP Ph3, S1

DOCUMENT NOT CONSIDERED FINAL UNLESS ALL SIGNATURES COMPLETED

Plans Prepared By:
DRMP
DRMP, INC.
8210 UNIVERSITY EXECUTIVE PARK DR.
SUITE 220
CHARLOTTE, NC 28262
NC LICENSE NO. F-1524 (704) 549-4260

Prepared for:
Transportation Mobility and Safety Division
Signal Design Section
750 N.Greenfield Pkwy,Garner,NC 27529

SCALE 0 40 1"=40'

NC 107
at
SR 1724 (Fairview Road) /
CVS Driveway

Division 14 Jackson County Sylva

PLAN DATE:	August 2025	REVIEWED BY:	ZM Esposito
PREPARED BY:	DS Griffith	REVIEWED BY:	BN Groome

REVISIONS	INIT.	DATE

SEAL
NORTH CAROLINA PROFESSIONAL SEAL 052936 ENGINEER BRITTANY N. GROOME
Signed by: Brittany Groome 8/26/2025
1E0934DE1D94454...
DATE

SIG. INVENTORY NO. I4-0790T4

21-AUG-2025 13:58
dgn=Signal_Design_Sheets=HOR_US_East_01/Documents/NCDOT/NCDOT_Western_Div_On-Call_M_/NCDOT_6170_R5600_NC170_US23BUS/6.0_CAD_B1M/6.2_Work_In_Progress/R-5600 NCDOT File Structure/Traffic/Signals/Design/Signal Design/14-0790/14-0790T4_sig_dsn_2025mmdd.dgn
dgn=ffitth AT CHA-QGR1FFITH

Docusign Envelope ID: EDBF09DE-B24D-4F89-928A-48F3924CA521

PROJECT REFERENCE NO.	SHEET NO.
R-5600	Sig-41.1

18 CHANNEL IP CONFLICT MONITOR PROGRAMMING DETAIL

(remove jumpers and set switches as shown)

REMOVE DIODE JUMPERS
1-3, 1-5, 1-6, 1-9, 1-10, 1-11, 1-12, 1-15, 2-5, 2-6, 2-9, 2-11, 2-12, 2-13, 2-15, 2-18, 3-5, 3-6, 3-9, 3-10, 3-11,3-12, 3-15, 4-8, 4-10, 4-12, 4-16, 5-9, 5-10, 5-11, 5-12, 5-13, 5-18, 6-9, 6-10, 6-11, 6-13, 6-15, 6-18, 8-10, 8-12, 8-16, 9-10, 9-11, 9-12, 9-13, 9-15, 9-18, 10-11, 10-12, 10-15, 10-16, 11-12, 11-13, 11-15, 11-18, 12-13, 12-16, 12-18, 13-15, 13-18 AND 15-18.

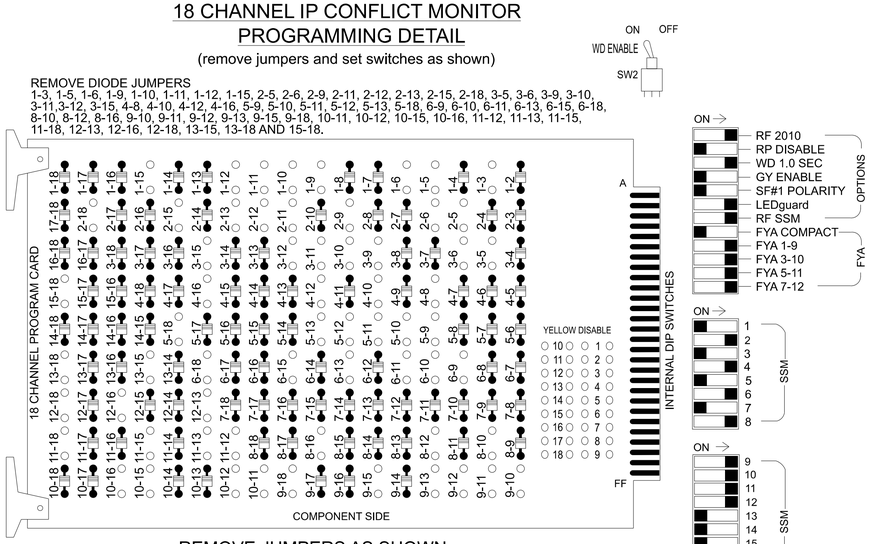

NOTES:

1. Card is provided with all diode jumpers in place. Removal of any jumper allows its channels to run concurrently.
2. Ensure jumpers SEL2-SEL5 and SEL9 are present on the monitor board.
3. Ensure that the Red Enable is active at all times during normal operation.
4. Integrate monitor with Ethernet network in cabinet.

REMOVE JUMPERS AS SHOWN

NOTES

1. To prevent "flash-conflict" problems, insert red flash program blocks for all unused vehicle load switches in the output file. The installer shall verify that signal heads flash in accordance with the signal plan.
2. Program phases 4 and 8 for Dual Entry.
3. Program controller to start up in phase 2 Green No Walk and 6 Green No Walk.
4. If this signal will be managed by an ATMS software, enable controller and detector logging for all detectors used at this location.
5. The cabinet and controller are part of the XXX Time Based Coordination System.

EQUIPMENT INFORMATION

Controller.....2070LX
Cabinet.....332 w/ Aux
Software.....Q-Free MAXTIME
Cabinet Mount.....Base
Output File Positions.....18 With Aux. Output File
Load Switches Used.....S1, S2, S3, S4, S5, S7, S8, S10, S11, S12, AUX S1, AUX S2, AUX S4, AUX S5, AUX S6
Phases Used.....1, 2, 2 PED, 4, 5, 6, 6 PED, 8, 8 PED
Overlap "1".....*
Overlap "2".....*
Overlap "3".....*
Overlap "4".....*
Overlap "5".....NOT USED
Overlap "6".....*
Overlap "7".....*

*See overlap programming detail on sheet 2.

SIGNAL HEAD HOOK-UP CHART

LOAD SWITCH NO.	S1	S2	S3	S4	S5	S6	S7	S8	S9	S10	S11	S12	AUX S1	AUX S2	AUX S3	AUX S4	AUX S5	AUX S6
CMU CHANNEL NO.	1	2	13	3	4	14	5	6	15	7	8	16	9	10	17	11	12	18
PHASE	1	2	2 PED	OL7	4	4 PED	5	6	6 PED	7	8	8 PED	OL1	OL2	SPARE	OL3	OL4	OL6
SIGNAL HEAD NO.	11★	21,22	P21, P22	83★	41,42	NU	51★	61,62	NU	P61, P62	81,82	P81, P82	11★	83★	NU	51★	43★	23★
RED		128			101			134			107			A124			A101	A104
YELLOW	*	129		*	102		*	135			108							
GREEN		130			103			136			109							
RED ARROW													A121			A114		
YELLOW ARROW													A122	A125		A115	A102	A105
FLASHING YELLOW ARROW													A123	A126		A116	A103	A106
GREEN ARROW	127			118			133											
✋			113						119			110						
🚶			115						121			112						

NU = Not Used NC = Not Connected
* Denotes install load resistor. See load resistor installation detail this sheet.
★ See pictorial of head wiring in detail this sheet.

FYA SIGNAL WIRING DETAIL

(wire signal heads as shown)

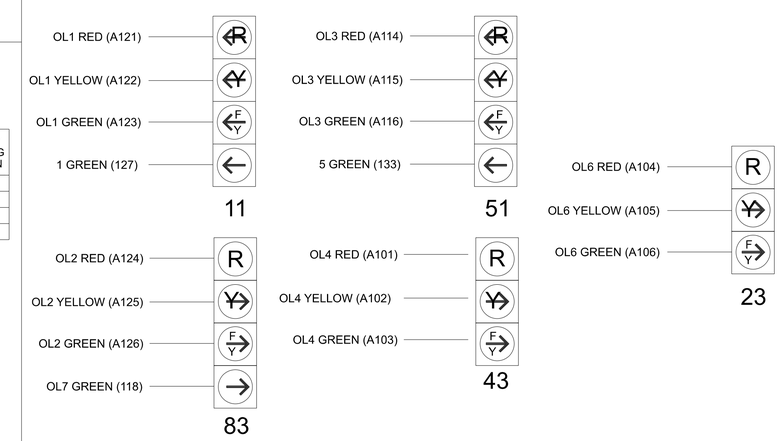

INPUT FILE POSITION LAYOUT

(front view)

		1	2	3	4	5	6	7	8	9	1O	11	12	13	14
FILE "I"	U	∅ 1 1A	SLOT	SLOT	SLOT	SLOT	SLOT	SLOT	SLOT	SLOT	SLOT	SLOT	∅ 2 PED DC ISOLATOR	∅ 6 PED DC ISOLATOR	FS DC ISOLATOR
	L	NOT USED	EMPTY	EMPTY	EMPTY	EMPTY	EMPTY	EMPTY	EMPTY	EMPTY	EMPTY	EMPTY	NOT USED	∅ 8 PED DC ISOLATOR	ST DC ISOLATOR
FILE "J"	U	∅ 5 5A	SLOT	SLOT	SLOT	SLOT	SLOT	SLOT	SLOT	SLOT	SLOT	SLOT	SLOT	SLOT	SLOT
	L	NOT USED	EMPTY	EMPTY	EMPTY	EMPTY	EMPTY	EMPTY	EMPTY	EMPTY	EMPTY	EMPTY	EMPTY	EMPTY	EMPTY

EX.: 1A, 2A, ETC. = LOOP NO.'S

FS = FLASH SENSE
ST = STOP TIME

Note: For Detection Zones 1A and 5A the equipment and slots reserved are typical for a NCDOT installation.

INPUT FILE CONNECTION & PROGRAMMING CHART

LOOP NO.	LOOP TERMINAL	INPUT FILE POS.	PIN NO.	INPUT POINT	DETECTOR NO.	CALL PHASE	DELAY TIME	EXTEND TIME	EXTEND	ADDED INITIAL	CALL	DELAY DURING GREEN
1A	TB2-1,2	I1U	56	18	1	1	15.0		X		X	
				-	29	6			X		X	
5A	TB3-1,2	J1U	55	17	15	5	15.0		X		X	
				-	31	2			X		X	
PED PUSH BUTTONS												
P21,P22	TB8-4,6	I12U	67	33	2	PED 2						
P61,P62	TB8-7,9	I13U	68	34	6	PED 6						
P81,P82	TB8-8,9	I13L	70	36	8	PED 8						

NOTE:
INSTALL DC ISOLATORS IN INPUT FILE SLOTS I12 AND I13.

*System detector only. Remove any assigned vehicle phase.

INPUT FILE POSITION LEGEND: J2L
FILE J
SLOT 2
LOWER

LOAD RESISTOR INSTALLATION DETAIL

(install resistors as shown)

ACCEPTABLE VALUES	
Value (ohms)	Wattage
1.5K - 1.9K	25W (min)
2.0K - 3.0K	10W (min)

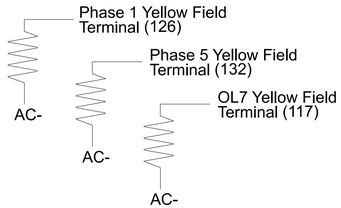

SPECIAL DETECTOR NOTE

1. Install a multi-zone microwave detection system for vehicle detection. Perform installation according to manufacturer's directions and NCDOT engineer -approved mounting locations to accomplish the detection schemes shown on the Signal Design Plans.
2. For Detection Zones 1A and 5A, the equipement placement is typical for a NCDOT installation.

THIS ELECTRICAL DETAIL IS FOR
THE SIGNAL DESIGN: 14-0790T4
DESIGNED: Aug 2025
SEALED: 8/26/2025
REVISED: N/A

Electrical Detail - Sheet 1 of 2
Temporary Design 4 - TMP Ph3, S1

DOCUMENT NOT CONSIDERED FINAL UNLESS ALL SIGNATURES COMPLETED

ELECTRICAL AND PROGRAMMING DETAILS FOR:

NC 107
at
SR 1724 (Fairview Road) /
CVS Driveway

Division 14 Jackson County Sylva

PLAN DATE:	August 2025	REVIEWED BY:	ZM Esposito
PREPARED BY:	DS Griffith	REVIEWED BY:	BN Groome

REVISIONS | INIT. | DATE

750 N.Greenfield Pkwy,Garner,NC 27529

SEAL
NORTH CAROLINA PROFESSIONAL SEAL 052936 ENGINEER BRITTANY N GROOME

Signed by: Brittany Groome 1E09340E1D9465A... 8/26/2025
DATE

SIG. INVENTORY NO. 14-0790T4

Plans Prepared By:
DRMP
DRMP, INC.
8210 UNIVERSITY EXECUTIVE PARK DR.
SUITE 220
CHARLOTTE, NC 28262
NC LICENSE NO. F-1524 (704) 549-4260

21-AUG-2025 12:11
dgriffith
S:\Traffic\Signals\Design\Signal Management\14-0790\14-0790T4_smuele.2025mmds.dgn
S:\Structure\Traffic\Signals\Design\Signal Management\14-0790\14-0790T4_smuele.2025mmds.dgn
S:\Western_Div_On-Call_MC_NCDOT_6170_R5600_NC170_US258US/6.0_CAD_BIM/6.2_Work_In_Progress/R-5600 NCDOT File Structure
Documents/NCDOT/NCDOT_Western_Div_On-Call_MC_NCDOT_6170_R5600_NC170_US258US/6.0_CAD_BIM/6.2_Work_In_Progress/R-5600 NCDOT File Structure
dgriffith AT CH4-DGRIFFITH

Docusign Envelope ID: EDBF09DE-B24D-4F89-928A-48F3924CA521

PROJECT REFERENCE NO.	SHEET NO.
R-5600	Sig-41.2

MAXTIME OVERLAP PROGRAMMING DETAIL

Front Panel
Main Menu >Controller >Overlap >Overlap Parameters/Overlap Timings

Web Interface
Home >Controller >Overlap Configuration >Overlaps

Overlap Plan 1

Overlap	1	2	3	4	6	7
Type	FYA 4 - Section	FYA 4 - Section	FYA 4 - Section	FYA 4 - Section	FYA 4 - Section	Normal
Included Phases	2	8	6	4,5	2	1
Modifier Phases	1	1	5	-	-	-
Modifier Overlap	-	-	-	-	-	-
Trail Green	0	0	0	0	0	0
Trail Yellow	0.0	0.0	0.0	0.0	0.0	0.0
Trail Red	0.0	0.0	0.0	0.0	0.0	0.0
FYA Ped Delay	7.0	0.0	0.0	0.0	7.0	0.0

MAXTIME STARTUP AND SOFTWARE FLASH PROGRAMMING DETAIL

Front Panel
Main Menu>Controller>Unit

Web Interface
Home>Controller>Unit

Start Up Parameters

Startup Clearance Hold
6

Unit Flash Parameters

All Red Flash Exit Time
6

OUTPUT CHANNEL CONFIGURATION

Front Panel
Main Menu >Controller >More>Channels>Channels Config

Web Interface
Home >Controller >Advanced IO>Channels>Channel Configuration

Channel Configuration

NOTICE OVERLAP 7 ASSIGNED TO CHANNEL 3

Channel	Control Type	Control Source	Flash Yellow	Flash Red	Flash Alt	MMU Channel
1	Phase Vehicle	1		X	X	1
2	Phase Vehicle	2		X		2
3	Overlap	7		X	X	3
4	Phase Vehicle	4		X		4
5	Phase Vehicle	5		X		5
6	Phase Vehicle	6		X	X	6
7	Phase Vehicle	7		X		7
8	Phase Vehicle	8		X	X	8
9	Overlap	1		X	X	9
10	Overlap	2		X	X	10
11	Overlap	3		X		11
12	Overlap	4		X		12
13	Phase Ped	2				13
14	Phase Ped	4				14
15	Phase Ped	6				15
16	Phase Ped	8				16
17	Overlap	5		X	X	17
18	Overlap	6		X		18

NOTICE FLASHING RED

FLASHER CIRCUIT MODIFICATION DETAIL

IN ORDER TO INSURE THAT SIGNALS FLASH CONCURRENTLY ON THE SAME APPROACH, MAKE THE FOLLOWING FLASHER CIRCUIT CHANGES:

1. ON REAR OF PDA - REMOVE WIRE FROM TERM. T2-4 AND TERMINATE ON T2-2.
2. ON REAR OF PDA - REMOVE WIRE FROM TERM. T2-5 AND TERMINATE ON T2-3.
3. REMOVE FLASHER UNIT 2.

THE CHANGES LISTED ABOVE TIES ALL PHASES AND OVERLAPS TO FLASHER UNIT 1.

THIS ELECTRICAL DETAIL IS FOR
THE SIGNAL DESIGN: 14-0790T4
DESIGNED: Aug 2025
SEALED: 8/26/2025
REVISED: N/A

Electrical Detail - Sheet 2 of 2
Temporary Design 4 - TMP Ph3, S1

DOCUMENT NOT CONSIDERED FINAL UNLESS ALL SIGNATURES COMPLETED

ELECTRICAL AND PROGRAMMING DETAILS FOR:

NC 107
at
SR 1724 (Fairview Road) /
CVS Driveway

Division 14 Jackson County Sylva

PLAN DATE:	August 2025	REVIEWED BY:	ZM Esposito
PREPARED BY:	DS Griffith	REVIEWED BY:	BN Groome

REVISIONS	INIT.	DATE

750 N.Greenfield Pkwy,Garner,NC 27529

Plans Prepared By:
DRMP
DRMP, INC.
8210 UNIVERSITY EXECUTIVE PARK DR.
SUITE 220
CHARLOTTE, NC 28262
NC LICENSE NO. F-1524 (704) 549-4260

SEAL
NORTH CAROLINA PROFESSIONAL SEAL 052936 ENGINEER BRITTANY N. GROOME

Signed by: Brittany Groome 8/26/2025
1E0934DE1D84484...
DATE

SIG. INVENTORY NO. 14-0790T4

21-AUG-2025 12:11
pw:\\pwdenver01:PWDR_US_East_01\Documents\NCDOT\NCDOT_Western_Div_On-Call_MC\NCDOT_6170_R5600_NC110_US23BUS\6.0_CAD_BIM\6.2_Work_In_Progress\R-5600 NCDOT File Structure\Traffic\Signals\Design\Signal Management\14-0790\14-0790T4_smu_ele_2025mmds.dgn
dgn:tfftn AT CHA:DGRIFFITH

Docusign Envelope ID: EDBF09DE-B24D-4F89-928A-48F3924CA521

PROJECT REFERENCE NO.	SHEET NO.
R-5600	Sig-42.0

PHASING DIAGRAM

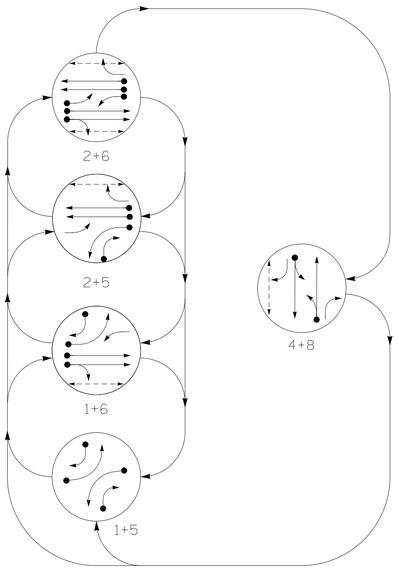

PHASING DIAGRAM DETECTION LEGEND

- DETECTED MOVEMENT
- UNDETECTED MOVEMENT (OVERLAP)
- UNSIGNALIZED MOVEMENT
- PEDESTRIAN MOVEMENT

TABLE OF OPERATION

SIGNAL FACE	PHASE 1+5	1+6	2+5	2+6	4+8	FLASH
11	←	←	F Y	F Y	←R	←R
21, 22	R	R	G	G	R	R
23	R	R	F Y→	F Y→	R	R
41,42	R	R	R	R	G	R
43	F Y→	R	F Y→	R	F Y→	R
51	←	F Y	←	F Y	←R	←R
61, 62	R	G	R	G	R	R
81,82	R	R	R	R	G	R
83	→	→	R	R	F Y→	R
P21, P22	DW	DW	W	W	DW	DRK
P61, P62	DW	W	DW	W	DW	DRK
P81, P82	DW	DW	DW	DW	W	DRK

SIGNAL FACE I.D.

All Heads L.E.D.

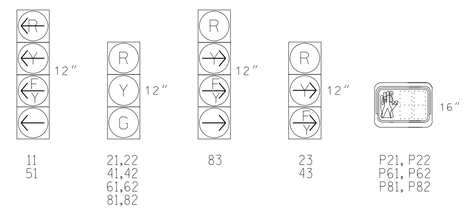

MAXTIME DETECTOR INSTALLATION CHART

DETECTOR					PROGRAMMING						
LOOP	SIZE (FT)	DISTANCE FROM STOPBAR (FT)	TURNS	NEW LOOP	CALL PHASE	DELAY TIME	EXTEND TIME	EXTEND	ADDED INITIAL	CALL	DELAY DURING GREEN	NEW CARD
1A	6X40	0	*	*	1	15.0	-	X	-	X	-	*
					6	-	-	X	-	X	-	*
1B	*	0	*	X	1	15.0	-	X	-	X	-	*
4A	*	0	*	X	4	5.0	-	X	-	X	-	*
5A	6X40	0	*	*	5	15.0	-	X	-	X	-	*
					2	-	-	X	-	X	-	*
5B	*	0	*	X	5	15.0	-	X	-	X	-	*
8A	*	0	*	X	8	5.0	-	X	-	X	-	*

* Multi-Zone Microwave Detection Zone

5 Phase Fully Actuated (NC 107 - D14-14)

NOTES

1. Refer to "Roadway Standard Drawings NCDOT" dated January 2024 and "Standard Specifications for Roads and Structures" dated January 2024.
2. Do not program signal for late night flashing operation unless otherwise directed by the Engineer.
3. Phase 1 and/or phase 5 may be lagged.
4. Set all detectors to presence mode.
5. Omit "WALK" and flashing "DON'T WALK" with no pedestrian calls.
6. Program pedestrian heads to countdown the flashing "Don't Walk" time only.
7. To provide a leading pedestrian interval on Phase 2, program FYA heads numbered 11 and 23 to delay for 7 seconds after the start of the phase 2 walk interval. See Electrical Details for programming.
8. This intersection uses multi-zone microwave detection. Install detectors according to the manufacturer's instructions to achieve the desired detection.
9. Maximum times shown in timing chart are for free-run operation only. Coordinated signal system timing values supersede these values.

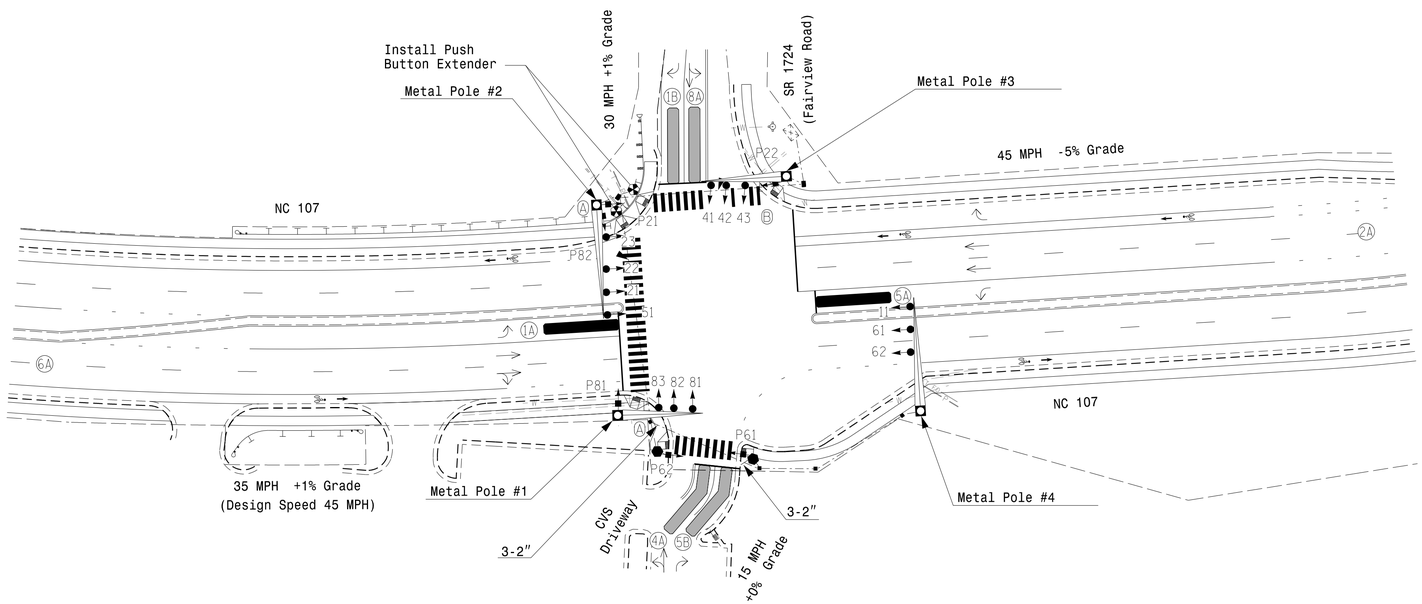

LEGEND

PROPOSED		EXISTING
	Traffic Signal Head	
	Modified Signal Head	N/A
	Sign	
	Pedestrian Signal Head With Push Button & Sign	
	Signal Pole with Guy	
	Signal Pole with Sidewalk Guy	
	Inductive Loop Detector	
	Controller & Cabinet	
	Junction Box	
	Oversized Junction Box	
	2-in Underground Conduit	
N/A	Right of Way	
	Directional Arrow	
DD	Directional Drill	DD
	Metal Pole with Mastarm	
	Type I Pushbutton Post	
	Type II Signal Pedestal	
	Non-Intrusive Detection Zone	
N/A	Underground Fiber Optics Telephone Cable	T FO
N/A	Overhead Power & Utilities Lines	PROP O/H POW LINES
N/A	Underground Power Line	P
N/A	Underground Water Line	W
N/A	Underground Telephone Cable	T
A	"RIGHT TURN SIGNAL" Sign (R10-10R)	A
B	Right Turn Yield to U-Turn Sign (R10-30)	B

MAXTIME TIMING CHART

FEATURE	PHASE 1	2	4	5	6	8
Walk *	–	14	–	–	12	14
Ped Clear	–	15	–	–	7	23
Min Green *	7	12	7	7	12	7
Passage *	2.0	2.0	2.0	2.0	2.0	2.0
Max 1 *	15	120	40	15	120	40
Yellow Change	3.0	5.0	3.5	3.1	5.0	3.5
Red Clear	2.9	2.1	4.7	3.3	2.1	4.7
Added Initial *	–	–	–	–	–	–
Maximum Initial *	–	–	–	–	–	–
Time Before Reduction *	–	–	–	–	–	–
Time To Reduce *	–	–	–	–	–	–
Minimum Gap	–	–	–	–	–	–
Advance Walk	–	**	–	–	5	7
Non Lock Detector	X	–	X	X	–	X
Vehicle Recall	–	MIN RECALL	–	–	MIN RECALL	–
Dual Entry	–	–	X	–	–	X

* These values may be field adjusted. Do not adjust Min Green and Extension times for phases 2 and 6 lower than what is shown. Min Green for all other phases should not be lower than 4 seconds.
** See note #7

Microwave Detection

	2A		6A	
FUNCTION	Sensor 1		Sensor 2	
Channel	1		1	
Phase	2		6	
Direction of Travel	NB		SB	
Type	Priority		Priority	
Level	2	QUEUE	2	QUEUE
Detection Zone (ft)	<750	–	<750	–
Range (ft)	600–100	150–100	600–100	150–100
Enable Speed	Y	Y	Y	Y
Speed Range (mph)	35–100	1–35	35–100	1–35
Enable Estimated Time of Arrival	Y	N	Y	N
Estimated Time of Arrival (sec)	2.5–6.5	–	2.5–6.5	–

Signal Upgrade - Final Design

DOCUMENT NOT CONSIDERED FINAL UNLESS ALL SIGNATURES COMPLETED

Plans Prepared By:

DRMP, INC.
8210 UNIVERSITY EXECUTIVE PARK DR.
SUITE 220
CHARLOTTE, NC 28262
NC LICENSE NO. F-1524 (704) 549-4260

Prepared for: Transportation Mobility and Safety Division, Signal Design Section, NC Department of Transportation
750 N.Greenfield Pkwy,Garner,NC 27529

SCALE 1"=40' (0 – 40)

NC 107 at SR 1724 (Fairview Road) / CVS Driveway

Division 14 Jackson County Sylva

PLAN DATE:	August 2025	REVIEWED BY:	ZM Esposito
PREPARED BY:	DS Griffith	REVIEWED BY:	BN Groome

REVISIONS	INIT.	DATE

SEAL: NORTH CAROLINA PROFESSIONAL SEAL 052936 ENGINEER BRITTANY N. GROOME

Signed by: Brittany Groome 1E0934DE1094454... 8/26/2025 DATE

SIG. INVENTORY NO. I4-0790

21-AUG-2025 13:58
R:\Traffic\Signals\HOR_US_East_01\Documents\NCDOT\NCDOT_Western_Div_On-Call_M_/NCDOT_6170_R5600_NC170_US23BUS/6.0_CAD_BIM/6.2_Work_In_Progress/R-5600 NCDOT File Structure/Traffic/Signals/Design/Signal Design/14-0790/14-0790_sig_dsn_2025mod4.dgn
User:dsgriffith AT CHA-DGRIFFITH

Docusign Envelope ID: EDBF09DE-B24D-4F89-928A-48F3924CA521

PROJECT REFERENCE NO.	SHEET NO.
R-5600	Sig-42.1

18 CHANNEL IP CONFLICT MONITOR PROGRAMMING DETAIL

(remove jumpers and set switches as shown)

REMOVE DIODE JUMPERS
1-3, 1-5, 1-6, 1-9, 1-10, 1-11, 1-12, 1-15, 2-5, 2-6, 2-9, 2-11, 2-12, 2-13, 2-15, 2-18, 3-5, 3-6, 3-9, 3-10, 3-11,3-12, 3-15, 4-8, 4-10, 4-12, 4-16, 5-9, 5-10, 5-11, 5-12, 5-13, 5-18, 6-9, 6-10, 6-11, 6-13, 6-15, 6-18, 8-10, 8-12, 8-16, 9-10, 9-11, 9-12, 9-13, 9-15, 9-18, 10-11, 10-12, 10-15, 10-16, 11-12, 11-13, 11-15, 11-18, 12-13, 12-16, 12-18, 13-15, 13-18 AND 15-18.

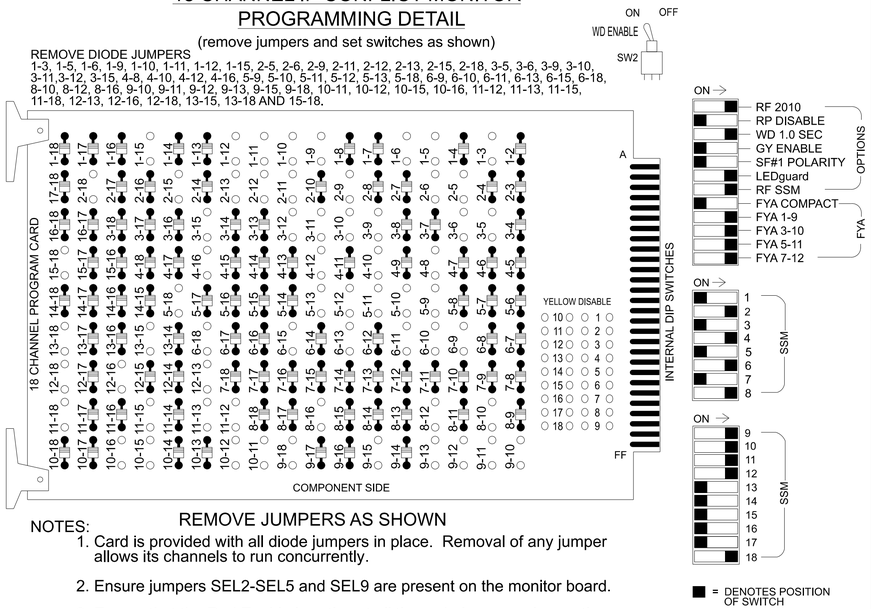

NOTES:

REMOVE JUMPERS AS SHOWN

1. Card is provided with all diode jumpers in place. Removal of any jumper allows its channels to run concurrently.
2. Ensure jumpers SEL2-SEL5 and SEL9 are present on the monitor board.
3. Ensure that the Red Enable is active at all times during normal operation.
4. Integrate monitor with Ethernet network in cabinet.

NOTES

1. To prevent "flash-conflict" problems, insert red flash program blocks for all vehicle load switches in the output file. The installer shall verify that signal heads flash in accordance with the signal plan.
2. Program phases 4 and 8 for Dual Entry.
3. Program controller to start up in phase 2 Green No Walk and 6 Green No Walk.
4. If this signal will be managed by an ATMS software, enable controller and detector logging for all detectors used at this location.
5. The cabinet and controller are part of the NC 107_D14-14 System.

EQUIPMENT INFORMATION

Controller.....2070LX
Cabinet.....332 w/ Aux
Software.....Q-Free MAXTIME
Cabinet Mount.....Base
Output File Positions.....18 With Aux. Output File
Load Switches Used.....S1, S2, S3, S4, S5, S7, S8, S9, S11, S12
AUX S1, AUX S2, AUX S4, AUX S5, AUX S6
Phases Used.....1, 2, 2PED, 4, 5, 6, 6PED, 8, 8PED
Overlap "1".....*
Overlap "2".....*
Overlap "3".....*
Overlap "4".....*
Overlap "5".....NOT USED
Overlap "6".....*
Overlap "7".....*

*See overlap programming detail in sheet 2.

SIGNAL HEAD HOOK-UP CHART

LOAD SWITCH NO.	S1	S2	S3	S4	S5	S6	S7	S8	S9	S10	S11	S12	AUX S1	AUX S2	AUX S3	AUX S4	AUX S5	AUX S6
CMU CHANNEL NO.	1	2	13	3	4	14	5	6	15	7	8	16	9	10	17	11	12	18
PHASE	1	2	2 PED	OL7	4	4 PED	5	6	6 PED	7	8	8 PED	OL1	OL2	SPARE	OL3	OL4	OL6
SIGNAL HEAD NO.	11★	21,22	P21, P22	83★	41,42	NU	51★	61,62	P61, P62	NC	81,82	P81, P82	11★	83★	NU	51★	43★	23★
RED		128			101			134			107			A124			A101	A104
YELLOW	*	129		*	102		*	135			108							
GREEN		130			103			136			109							
RED ARROW													A121			A114		
YELLOW ARROW													A122	A125		A115	A102	A105
FLASHING YELLOW ARROW													A123	A126		A116	A103	A106
GREEN ARROW	127			118			133											
✋			113						119			110						
🚶			115						121			112						

NU = Not Used NC = Not Connected
* Denotes install load resistor. See load resistor installation detail this sheet.
★ See pictorial of head wiring in detail this sheet.

FYA SIGNAL WIRING DETAIL

(wire signal heads as shown)

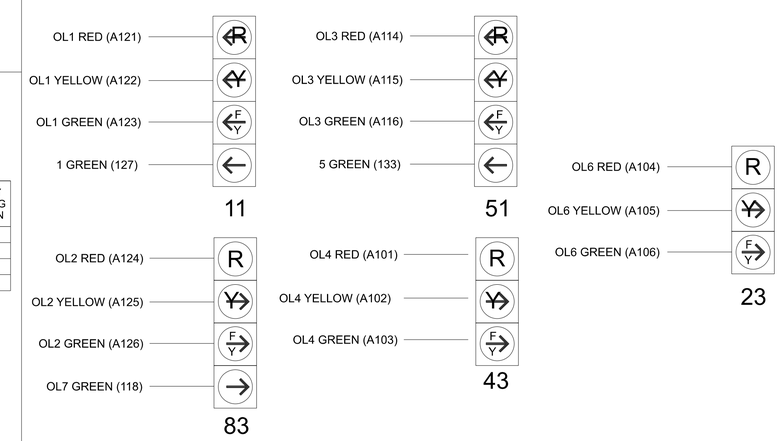

INPUT FILE POSITION LAYOUT

(front view)

		1	2	3	4	5	6	7	8	9	1O	11	12	13	14
FILE "I"	U	∅ 1 1A	SLOT	SLOT	SLOT	SLOT	SLOT	SLOT	SLOT	SLOT	SLOT	SLOT	∅ 2 PED DC ISOLATOR	∅ 6 PED DC ISOLATOR	FS DC ISOLATOR
	L	NOT USED	EMPTY	EMPTY	EMPTY	EMPTY	EMPTY	EMPTY	EMPTY	EMPTY	EMPTY	EMPTY	NOT USED	∅ 8 PED DC ISOLATOR	ST DC ISOLATOR
FILE "J"	U	∅ 5 5A	SLOT	SLOT	SLOT	SLOT	SLOT	SLOT	SLOT	SLOT	SLOT	SLOT	SLOT	SLOT	SLOT
	L	NOT USED	EMPTY	EMPTY	EMPTY	EMPTY	EMPTY	EMPTY	EMPTY	EMPTY	EMPTY	EMPTY	EMPTY	EMPTY	EMPTY

EX.: 1A, 2A, ETC. = LOOP NO.'S

FS = FLASH SENSE
ST = STOP TIME

Note: For Detection Zones 1A and 5A the equipment and slots reserved are typical for a NCDOT installation.

INPUT FILE CONNECTION & PROGRAMMING CHART

LOOP NO.	LOOP TERMINAL	INPUT FILE POS.	PIN NO.	INPUT POINT	DETECTOR NO.	CALL PHASE	DELAY TIME	EXTEND TIME	EXTEND	ADDED INITIAL	CALL	DELAY DURING GREEN
1A	TB2-1,2	I1U	56	18	1	1	15.0		X		X	
				-	29	6	3.0		X		X	X
5A	TB3-1,2	J1U	55	17	15	5	15.0		X		X	
				-	31	2	3.0		X		X	X
PED PUSH BUTTONS												
P21,P22	TB8-4,6	I12U	67	33	2	PED 2						
P61,P62	TB8-7,9	I13U	68	34	6	PED 6						
P81,P82	TB8-8,9	I13L	70	36	8	PED 8						

NOTE:
INSTALL DC ISOLATORS IN INPUT FILE SLOTS I12 AND I13.

INPUT FILE POSITION LEGEND: J2L
FILE J
SLOT 2
LOWER

LOAD RESISTOR INSTALLATION DETAIL

(install resistors as shown)

ACCEPTABLE VALUES	
Value (ohms)	Wattage
1.5K - 1.9K	25W (min)
2.0K - 3.0K	10W (min)

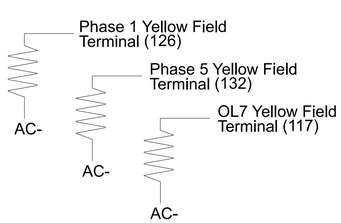

SPECIAL DETECTOR NOTE

1. Install a multi-zone microwave detection system for vehicle detection. Perform installation according to manufacturer's directions and NCDOT engineer -approved mounting locations to accomplish the detection schemes shown on the Signal Design Plans.
2. For Detection Zones 1A and 5A, the equipement placement is typical for a NCDOT installation.

THIS ELECTRICAL DETAIL IS FOR
THE SIGNAL DESIGN: 14-0790
DESIGNED: Aug 2025
SEALED: 8/26/2025
REVISED: N/A

Electrical Detail - Sheet 1 of 2
Final Design

DOCUMENT NOT CONSIDERED FINAL UNLESS ALL SIGNATURES COMPLETED

ELECTRICAL AND PROGRAMMING DETAILS FOR:

NC 107
at
SR 1724 (Fairview Road) /
CVS Driveway

Division 14 Jackson County Sylva

PLAN DATE:	August 2025	REVIEWED BY:	ZM Esposito
PREPARED BY:	DS Griffith	REVIEWED BY:	BN Groome

REVISIONS	INIT.	DATE

750 N.Greenfield Pkwy,Garner,NC 27529

SEAL
NORTH CAROLINA PROFESSIONAL SEAL 052936 ENGINEER BRITTANY N GROOME

Signed by: Brittany Groome 1E09340E1D9465A... 8/26/2025
DATE

SIG. INVENTORY NO. 14-0790

Plans Prepared By:
DRMP
DRMP, INC.
8210 UNIVERSITY EXECUTIVE PARK DR.
SUITE 220
CHARLOTTE, NC 28262
NC LICENSE NO. F-1524 (704) 549-4260

21-AUG-2025 12:13
dgriffith
S:\Traffic\Signals\Design\Signal Management\14-0790\14-0790_smele.2025rmpd.dgn

Docusign Envelope ID: EDBF09DE-B24D-4F89-928A-48F3924CA521

PROJECT REFERENCE NO.	SHEET NO.
R-5600	Sig-42.2

MAXTIME OVERLAP PROGRAMMING DETAIL

Front Panel
Main Menu >Controller >Overlap >Overlap Parameters/Overlap Timings

Web Interface
Home >Controller >Overlap Configuration >Overlaps

Overlap Plan 1

Overlap	1	2	3	4	6	7
Type	FYA 4 - Section	FYA 4 - Section	FYA 4 - Section	FYA 4 - Section	FYA 4 - Section	Normal
Included Phases	2	8	6	4,5	2	1
Modifier Phases	1	1	5	-	-	-
Modifier Overlap	-	-	-	-	-	-
Trail Green	0	0	0	0	0	0
Trail Yellow	0.0	0.0	0.0	0.0	0.0	0.0
Trail Red	0.0	0.0	0.0	0.0	0.0	0.0
FYA Ped Delay	7.0	7.0	0.0	0.0	7.0	0.0

OUTPUT CHANNEL CONFIGURATION

Front Panel
Main Menu >Controller >More>Channels>Channels Config

Web Interface
Home >Controller >Advanced IO>Channels>Channel Configuration

Channel Configuration

NOTICE OVERLAP 7 ASSIGNED TO CHANNEL 3

Channel	Control Type	Control Source	Flash Yellow	Flash Red	Flash Alt	MMU Channel
1	Phase Vehicle	1		X	X	1
2	Phase Vehicle	2		X		2
3	Overlap	7		X	X	3
4	Phase Vehicle	4		X		4
5	Phase Vehicle	5		X		5
6	Phase Vehicle	6		X	X	6
7	Phase Vehicle	7		X		7
8	Phase Vehicle	8		X	X	8
9	Overlap	1		X	X	9
10	Overlap	2		X	X	10
11	Overlap	3		X		11
12	Overlap	4		X		12
13	Phase Ped	2				13
14	Phase Ped	4				14
15	Phase Ped	6				15
16	Phase Ped	8				16
17	Overlap	5		X	X	17
18	Overlap	6		X		18

NOTICE FLASHING RED

MAXTIME STARTUP AND SOFTWARE FLASH PROGRAMMING DETAIL

Front Panel
Main Menu>Controller>Unit

Web Interface
Home>Controller>Unit

Start Up Parameters

Startup Clearance Hold
6

Unit Flash Parameters

All Red Flash Exit Time
6

COUNTDOWN PEDESTRIAN SIGNAL OPERATION

Countdown Ped Signals are required to display timing only during Ped Clearance Interval. Consult Ped Signal Module user's manual for instructions on selecting this feature.

FLASHER CIRCUIT MODIFICATION DETAIL

IN ORDER TO INSURE THAT SIGNALS FLASH CONCURRENTLY ON THE SAME APPROACH, MAKE THE FOLLOWING FLASHER CIRCUIT CHANGES:

1. ON REAR OF PDA - REMOVE WIRE FROM TERM. T2-4 AND TERMINATE ON T2-2.
2. ON REAR OF PDA - REMOVE WIRE FROM TERM. T2-5 AND TERMINATE ON T2-3.
3. REMOVE FLASHER UNIT 2.

THE CHANGES LISTED ABOVE TIES ALL PHASES AND OVERLAPS TO FLASHER UNIT 1.

THIS ELECTRICAL DETAIL IS FOR
THE SIGNAL DESIGN: 14-0790
DESIGNED: Aug 2025
SEALED: 8/26/2025
REVISED: N/A

Electrical Detail - Sheet 2 of 2
Final Design

DOCUMENT NOT CONSIDERED FINAL UNLESS ALL SIGNATURES COMPLETED

Plans Prepared By:
DRMP
DRMP, INC.
8210 UNIVERSITY EXECUTIVE PARK DR.
SUITE 220
CHARLOTTE, NC 28262
NC LICENSE NO. F-1524 (704) 549-4260

ELECTRICAL AND PROGRAMMING DETAILS FOR:

NC 107
at
SR 1724 (Fairview Road) /
CVS Driveway

Division 14 Jackson County Sylva

PLAN DATE:	August 2025	REVIEWED BY:	ZM Esposito
PREPARED BY:	DS Griffith	REVIEWED BY:	BN Groome

REVISIONS	INIT.	DATE

750 N.Greenfield Pkwy,Garner,NC 27529

SEAL
NORTH CAROLINA PROFESSIONAL SEAL 052936 ENGINEER BRITTANY N. GROOME

Signed by: Brittany Groome
1E0934DE1004454...
8/26/2025
DATE

SIG. INVENTORY NO. 14-0790

21-AUG-2025 12:13
pw:\\pwdpwint.HDR.US.Egst.01\Documents\NCDOT\NCDOT_Western_Div_On-Call_M_/NCDOT_6170_R5600_NC170_US23BUS/6.0_CAD_BIM/6.2_Work_In_Progress/R-5600 NCDOT File Structure/Traffic/Signals/Design/Signal Management/14-0790/14-0790_smu_ela_2025rmod.dgn
dgn:FFITH AT CHA-DGRIFFITH

Docusign Envelope ID: EDBF09DE-B24D-4F89-928A-48F3924CA521

METAL POLE No. 1 and 2

PROJECT REFERENCE NO.	SHEET NO.
R-5600	Sig-42.3

Design Loading for METAL POLE NO. 1

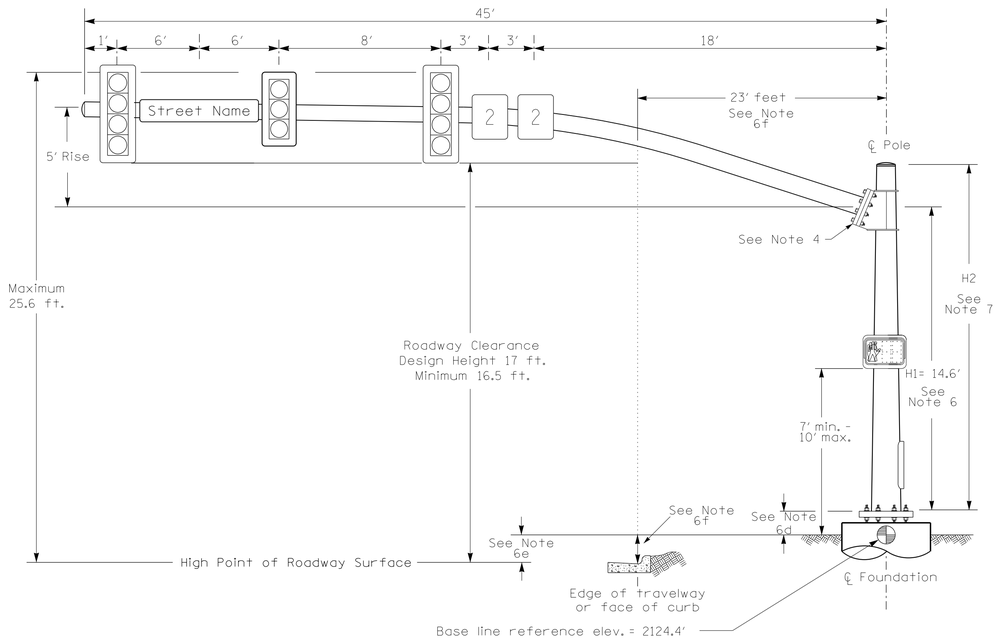

Elevation View

Design Loading for METAL POLE NO. 2

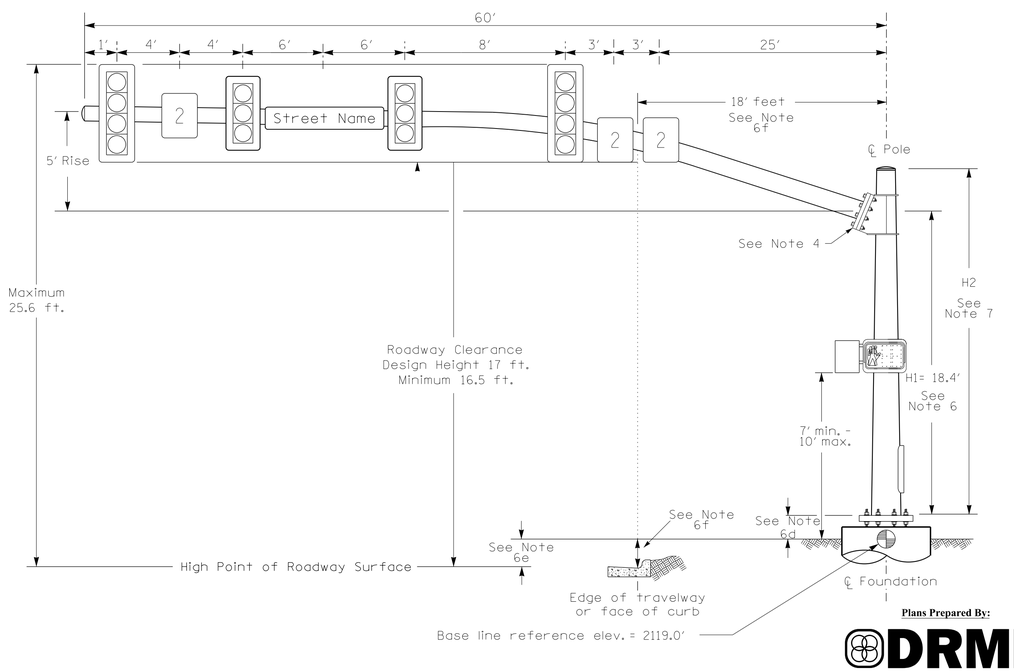

Elevation View

Plans Prepared By:

DRMP, INC.
8210 UNIVERSITY EXECUTIVE PARK DR.
SUITE 220
CHARLOTTE, NC 28262
NC LICENSE NO. F-1524 (704) 549-4260

SPECIAL NOTE

The contractor is responsible for verifying that the mast arm attachment height (H1) will provide the "Design Height" clearance from the roadway before submitting final shop drawings for approval. Verify elevation data below which was obtained by field measurement or from available project survey data.

Elevation Data for Mast Arm Attachment (H1)

Elevation Differences for:	Pole 1	Pole 2
Baseline reference point at ℄ Foundation @ ground level	2124.4 ft.	2119.0 ft.
Elevation difference at High point of roadway surface	+0.6 ft.	+4.4 ft.
Elevation difference at Edge of travelway or face of curb	+1.1 ft.	+3.2 ft.

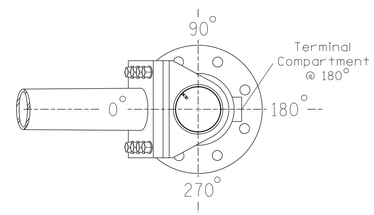

POLE RADIAL ORIENTATION

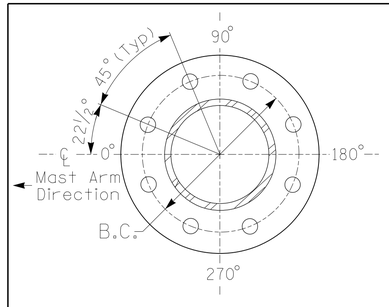

8 BOLT BASE PLATE DETAIL

See Note 5

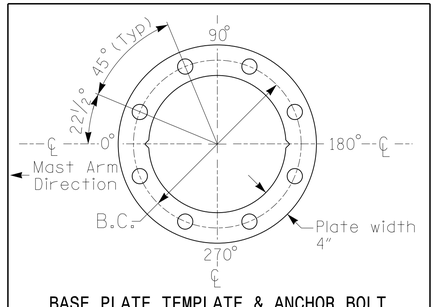

BASE PLATE TEMPLATE & ANCHOR BOLT LOCK PLATE DETAIL

For 8 Bolt Base Plate

MAST ARM LOADING SCHEDULE

LOADING SYMBOL	DESCRIPTION	AREA	SIZE	WEIGHT
	RIGID MOUNTED SIGNAL HEAD 12"-4 SECTION-WITH BACKPLATE	11.5 S.F.	25.5" W X 66.0" L	74 LBS
	RIGID MOUNTED SIGNAL HEAD 12"-3 SECTION-WITH BACKPLATE	9.3 S.F.	25.5" W X 52.5" L	60 LBS
2	SIGN RIGID MOUNTED	7.5 S.F.	30.0" W X 36.0" L	14 LBS
	PEDESTRIAN SIGNAL HEAD WITH MOUNTING HARDWARE	2.2 S.F.	18.5" W X 17.0" L	21 LBS
Street Name	STREET NAME SIGN RIGID MOUNTED	16.0 S.F.	24.0" W X 96.0" L	36 LBS

NOTES

DESIGN REFERENCE MATERIAL

1. Design the traffic signal structure and foundation in accordance with:
   - The 1st Edition 2015 AASHTO LRFD "Standard Specifications for Structural Supports for Highway Signs, Luminaires, and Traffic Signals, including all of the latest interim revisions.
   - The 2024 NCDOT "Standard Specifications for Roads and Structures." The latest addenda to the specifications can be found in the traffic signal project special provisions.
   - The 2024 NCDOT Roadway Standard Drawings.
   - The traffic signal project plans and special provisions.
   - The NCDOT "Metal Pole Standards" located at the following NCDOT website: https://connect.ncdot.gov/resources/safety/Pages/ITS-Design-Resources.aspx

DESIGN REQUIREMENTS

2. Design the traffic signal structure using the loading conditions shown in the elevation views. These are anticipated worst case "design loads" and may not represent the actual loads that will be applied at the time of the installation. The contractor should refer to the traffic signal plans for the actual loads that will be applied at the time of the installation.
3. Design all signal supports using force ratios that do not exceed 0.9.
4. A clamp-type bolted mast arm-to-pole connection may be used instead of the welded ring stiffened box connection shown as long as the connection meets all of the design requirements.
5. Design base plate with 8 anchor bolt holes. Provide 2 inch x 60 inch anchor bolts.
6. The mast arm attachment height (H1) shown is based on the following design assumptions:
   a. Nominal vertical rise in mast arm is 5 feet as measured from the centerline of the arm base to the centerline of the free end of the arm.
   b. Signal heads are rigidly mounted and vertically centered on the mast arm.
   c. The roadway clearance height for design is as shown in the elevation views.
   d. The top of the pole base plate is 0.75 feet above the ground elevation.
   e. Refer to the Elevation Data Chart for the elevation differences between the proposed foundation ground level and the high point of the roadway.
   f. Provide horizontal distance from the proposed centerline of the foundation to the edge of travelway. Refer to the Elevation Data Chart for elevation difference between the proposed foundation ground level and the edge of travelway. This information is necessary to ensure that the roadway clearance is maintained at the edge of the travelway and to aid in the camber design of the arm.
7. The pole manufacturer will determine the total height (H2) of each pole using the greater of the following:
   - Mast arm attachment height (H1) plus 2 feet, or
   - H1 plus 1/2 of the total height of the mast arm attachment assembly plus 1 foot.
8. If pole location adjustments are required, the contractor must gain approval from the Engineer as this may affect the mast arm lengths and arm attachment heights. The contractor may contact the Signal Design Section Senior Structural Engineer for assistance at (919) 814-5000.
9. The contractor is responsible for verifying that the mast arm length shown will allow proper positioning of the signal heads over the roadway.
10. The contractor is responsible for providing soil penetration testing data (SPT) to the pole manufacturer so site specific foundations can be designed.

All metal poles and arms should be black in color as specified in the project special provisions.

NCDOT Wind Zone 5 (110 mph)

DOCUMENT NOT CONSIDERED FINAL UNLESS ALL SIGNATURES COMPLETED

Prepared for the Offices of:
Transportation Mobility and Safety Division
Signal Design Section
750 N.Greenfield Pkwy,Garner,NC 27529

NC 107
at
SR 1724 (Fairview Road) / CVS Driveway

Division 14 Jackson County Sylva

PLAN DATE:	August 2025	REVIEWED BY:	ZM Esposito
PREPARED BY:	DJ White	REVIEWED BY:	BN Groome

SCALE 0 N/A N/A

REVISIONS	INIT.	DATE

SEAL
NORTH CAROLINA PROFESSIONAL SEAL 052936 ENGINEER BRITTANY N GROOME

Signed by: Brittany Groome 8/26/2025
DOCUSIGN ENVELOPE ID: 4B4E4E... DATE

SIG. INVENTORY NO. 14-0790

20-AUG-2025 18:37
D:\Users\DWHITE\DRP.RKA.Projects\2018 Projects\18042 R-5600 - Jackson County NC\TSMO\Signal Design\Metal Poles\140790_sig_MP1_2020mmdd.dgn
DWhite AT RAL_DWHITE

Docusign Envelope ID: EDBF09DE-B24D-4F89-928A-48F3924CA521

METAL POLE No. 3 and 4

PROJECT REFERENCE NO.	SHEET NO.
R-5600	Sig-42.4

Design Loading for METAL POLE NO. 3

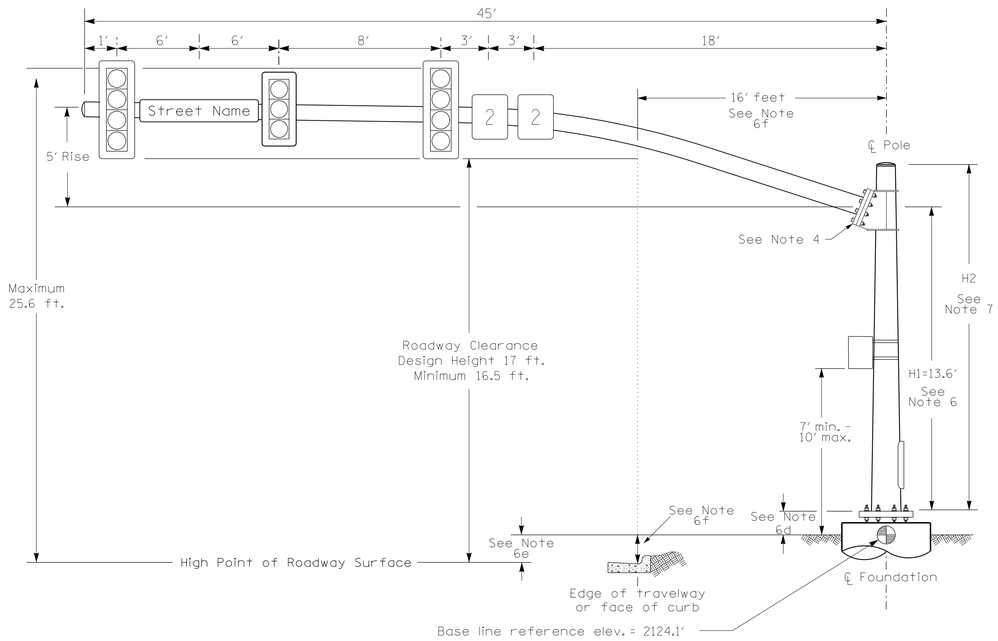

Elevation View

Design Loading for METAL POLE NO. 4

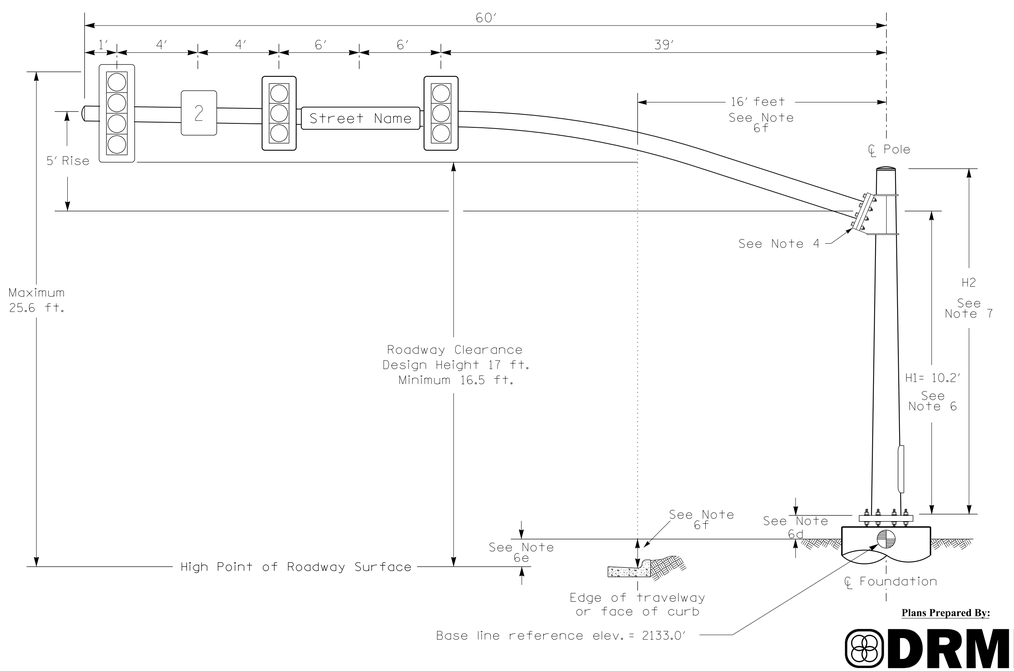

Elevation View

Plans Prepared By:

DRMP, INC.
8210 UNIVERSITY EXECUTIVE PARK DR.
SUITE 220
CHARLOTTE, NC 28262
NC LICENSE NO. F-1524 (704) 549-4260

SPECIAL NOTE

The contractor is responsible for verifying that the mast arm attachment height (H1) will provide the "Design Height" clearance from the roadway before submitting final shop drawings for approval. Verify elevation data below which was obtained by field measurement or from available project survey data.

Elevation Data for Mast Arm Attachment (H1)

Elevation Differences for:	Pole 3	Pole 4
Baseline reference point at ℄ Foundation @ ground level	2124.1 ft.	2133.0 ft.
Elevation difference at High point of roadway surface	+0.1 ft.	-3.8 ft.
Elevation difference at Edge of travelway or face of curb	+0.7 ft.	-3.3 ft.

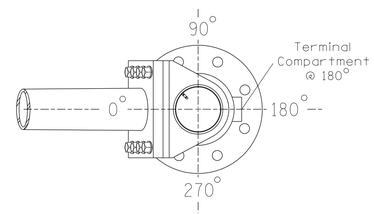

POLE RADIAL ORIENTATION

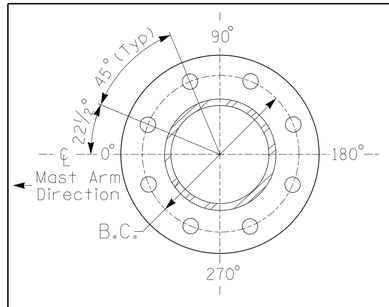

8 BOLT BASE PLATE DETAIL

See Note 5

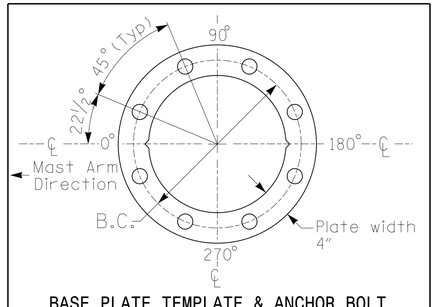

BASE PLATE TEMPLATE & ANCHOR BOLT LOCK PLATE DETAIL

For 8 Bolt Base Plate

MAST ARM LOADING SCHEDULE

LOADING SYMBOL	DESCRIPTION	AREA	SIZE	WEIGHT
	RIGID MOUNTED SIGNAL HEAD 12"-4 SECTION-WITH BACKPLATE	11.5 S.F.	25.5" W X 66.0" L	74 LBS
	RIGID MOUNTED SIGNAL HEAD 12"-3 SECTION-WITH BACKPLATE	9.3 S.F.	25.5" W X 52.5" L	60 LBS
2	SIGN RIGID MOUNTED	7.5 S.F.	30.0" W X 36.0" L	14 LBS
	PEDESTRIAN SIGNAL HEAD WITH MOUNTING HARDWARE	2.2 S.F.	18.5" W X 17.0" L	21 LBS
Street Name	STREET NAME SIGN RIGID MOUNTED	16.0 S.F.	24.0" W X 96.0" L	36 LBS

NOTES

DESIGN REFERENCE MATERIAL

1. Design the traffic signal structure and foundation in accordance with:
   - The 1st Edition 2015 AASHTO LRFD "Standard Specifications for Structural Supports for Highway Signs, Luminaires, and Traffic Signals, including all of the latest interim revisions.
   - The 2024 NCDOT "Standard Specifications for Roads and Structures." The latest addenda to the specifications can be found in the traffic signal project special provisions.
   - The 2024 NCDOT Roadway Standard Drawings.
   - The traffic signal project plans and special provisions.
   - The NCDOT "Metal Pole Standards" located at the following NCDOT website: https://connect.ncdot.gov/resources/safety/Pages/ITS-Design-Resources.aspx

DESIGN REQUIREMENTS

2. Design the traffic signal structure using the loading conditions shown in the elevation views. These are anticipated worst case "design loads" and may not represent the actual loads that will be applied at the time of the installation. The contractor should refer to the traffic signal plans for the actual loads that will be applied at the time of the installation.
3. Design all signal supports using force ratios that do not exceed 0.9.
4. A clamp-type bolted mast arm-to-pole connection may be used instead of the welded ring stiffened box connection shown as long as the connection meets all of the design requirements.
5. Design base plate with 8 anchor bolt holes. Provide 2 inch x 60 inch anchor bolts.
6. The mast arm attachment height (H1) shown is based on the following design assumptions:
   a. Nominal vertical rise in mast arm is 5 feet as measured from the centerline of the arm base to the centerline of the free end of the arm.
   b. Signal heads are rigidly mounted and vertically centered on the mast arm.
   c. The roadway clearance height for design is as shown in the elevation views.
   d. The top of the pole base plate is 0.75 feet above the ground elevation.
   e. Refer to the Elevation Data Chart for the elevation differences between the proposed foundation ground level and the high point of the roadway.
   f. Provide horizontal distance from the proposed centerline of the foundation to the edge of travelway. Refer to the Elevation Data Chart for elevation difference between the proposed foundation ground level and the edge of travelway. This information is necessary to ensure that the roadway clearance is maintained at the edge of the travelway and to aid in the camber design of the arm.
7. The pole manufacturer will determine the total height (H2) of each pole using the greater of the following:
   - Mast arm attachment height (H1) plus 2 feet, or
   - H1 plus 1/2 of the total height of the mast arm attachment assembly plus 1 foot.
8. If pole location adjustments are required, the contractor must gain approval from the Engineer as this may affect the mast arm lengths and arm attachment heights. The contractor may contact the Signal Design Section Senior Structural Engineer for assistance at (919) 814-5000.
9. The contractor is responsible for verifying that the mast arm length shown will allow proper positioning of the signal heads over the roadway.
10. The contractor is responsible for providing soil penetration testing data (SPT) to the pole manufacturer so site specific foundations can be designed.

All metal poles and arms should be black in color as specified in the project special provisions.

NCDOT Wind Zone 5 (110 mph)

DOCUMENT NOT CONSIDERED FINAL UNLESS ALL SIGNATURES COMPLETED

Prepared for the Offices of:
Transportation Mobility and Safety Division
Signal Design Section
750 N.Greenfield Pkwy,Garner,NC 27529

NC 107
at
SR 1724 (Fairview Road) /
CVS Driveway

Division 14 Jackson County Sylva

PLAN DATE:	August 2025	REVIEWED BY:	ZM Esposito
PREPARED BY:	DJ White	REVIEWED BY:	BN Groome

SCALE 0 N/A N/A

REVISIONS	INIT.	DATE

SEAL
NORTH CAROLINA PROFESSIONAL SEAL 052936 ENGINEER BRITTANY N GROOME

Signed by: Brittany Groome 8/26/2025
DOCUSIGN ENVELOPE ID: DATE

SIG. INVENTORY NO. 14-0790

20-AUG-2025 18:37
01:\Roll\CAD\DGN\BRA_Projects\2018 Projects\18042 R-5600 - Jackson County NC\TSMO\Signal Design\Metal Poles\140790_sig_MP1_2020mmdd.dgn
DWhite AT RAL_DWHITE

Docusign Envelope ID: EDBF09DE-B24D-4F89-928A-48F3924CA521

PROJECT REFERENCE NO.	SHEET NO.
R-5600	Sig-43.0

PHASING DIAGRAM

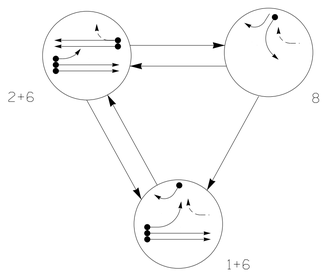

TABLE OF OPERATION

SIGNAL FACE	PHASE 1+6	PHASE 2+6	PHASE 8	FLASH
11	←-	F Y	←R	←R
22, 23, 24	R	G	R	R
61, 62	G	G	R	R
81	←R	←R	←-	←R
82, 83	-→	R	-→	R

SIGNAL FACE I.D.

All Heads L.E.D.

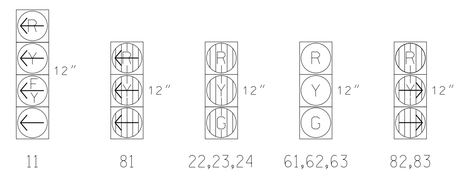

MAXTIME DETECTOR INSTALLATION CHART

DETECTOR					PROGRAMMING						
LOOP	SIZE (FT)	DISTANCE FROM STOPBAR (FT)	TURNS	NEW LOOP	CALL PHASE	DELAY TIME	EXTEND TIME	EXTEND	ADDED INITIAL	CALL	DELAY DURING GREEN	NEW CARD
1A	*	0	*	X	1	15.0	-	X	-	X	-	*
					6	-	-	X	-	X	-	*
1B	*	0	*	X	1	15.0	-	X	-	X	-	*
8A	*	0	*	X	8	3.0	-	X	-	X	-	*

* Multi-Zone Microwave Detection Zone

3 Phase
Fully Actuated
(Time Based Coordination)

NOTES

1. Refer to "Roadway Standard Drawings NCDOT" dated January 2024 and "Standard Specifications for Roads and Structures" dated January 2024.
2. Do not program signal for late night flashing operation unless otherwise directed by the Engineer.
3. Phase 1 may be lagged.
4. Set all detector units to presence mode.
5. Locate new cabinet so as not to obstruct sight distance of vehicles turning right on red.
6. This intersection uses multi-zone microwave detection. Install detectors according to the manufacturer's instructions to achieve the desired detection.
7. Maximum times shown in timing chart are for free-run operation only. Coordinated signal system timing values supersede these values.

PHASING DIAGRAM DETECTION LEGEND

- DETECTED MOVEMENT
- UNDETECTED MOVEMENT (OVERLAP)
- UNSIGNALIZED MOVEMENT
- PEDESTRIAN MOVEMENT

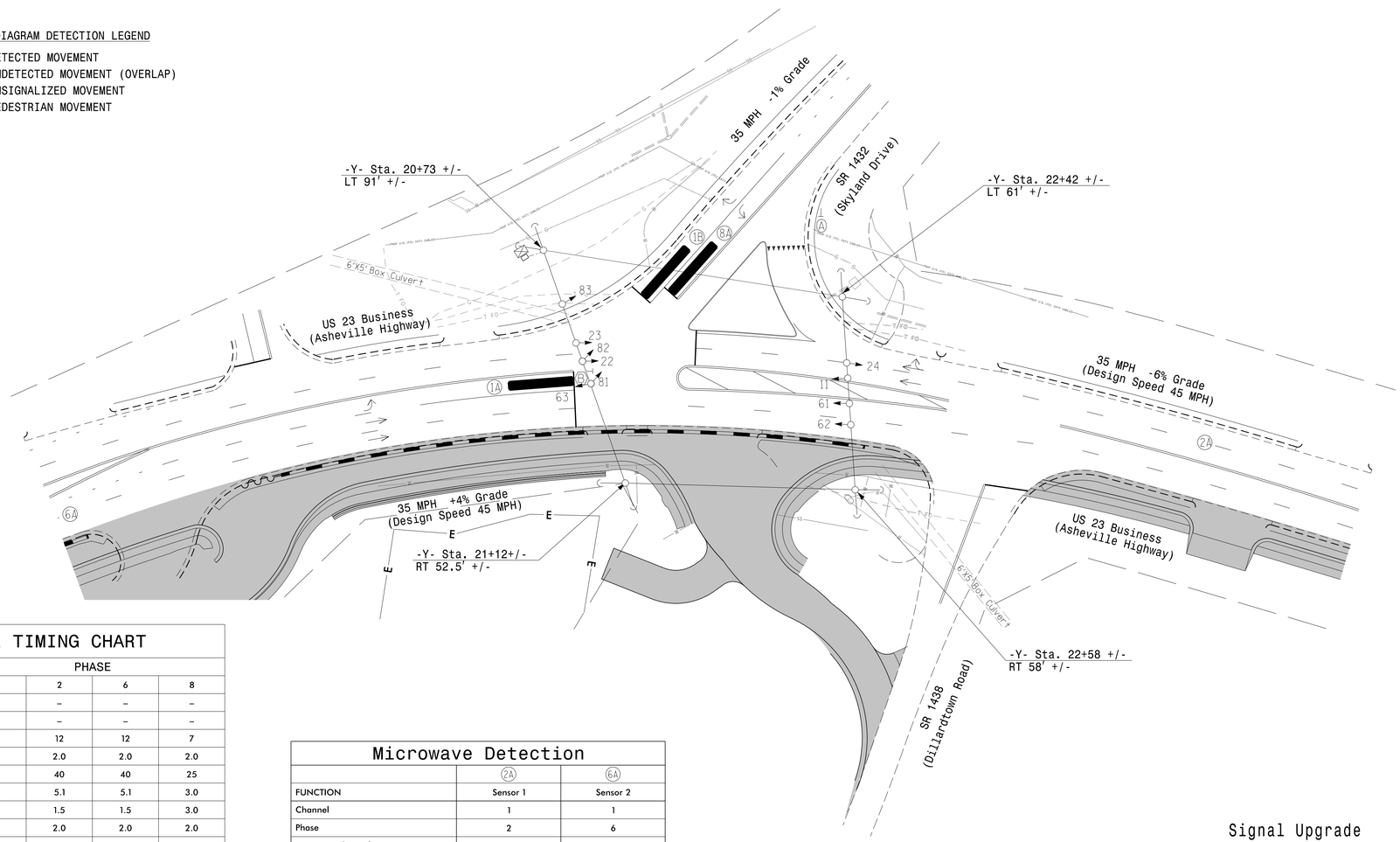

LEGEND

PROPOSED		EXISTING
	Traffic Signal Head	
	Modified Signal Head	N/A
	Sign	
	Pedestrian Signal Head With Push Button & Sign	
	Signal Pole with Guy	
	Signal Pole with Sidewalk Guy	
	Inductive Loop Detector	
	Controller & Cabinet	
	Junction Box	
	Oversized Junction Box	
	2-in Underground Conduit	
N/A	Right of Way	
	Directional Arrow	
DD	Directional Drill	N/A
	Non-Intrusive Detection Zone	
	Type II Signal Pedestal	
	Construction Zone	N/A
N/A	Temp. Construction Easement	E
N/A	Drainage Removal	
N/A	Gas Line	G
N/A	U/G Sanitary Sewer	SS
N/A	U/G Water Line	W
N/A	Telephone Fiber	T FO
N/A	Drainage Pipe	
N/A	Underground CATV Fiber	CATV CABLE
N/A	Portable Concrete Barrier	
A	"YIELD" Sign (R1-2)	A
B	No Left Turn Sign (R3-2)	B

MAXTIME TIMING CHART

FEATURE	PHASE 1	PHASE 2	PHASE 6	PHASE 8
Walk *	–	–	–	–
Ped Clear *	–	–	–	–
Min Green	7	12	12	7
Passage *	2.0	2.0	2.0	2.0
Max 1 *	25	40	40	25
Yellow Change	3.0	5.1	5.1	3.0
Red Clear	2.1	1.5	1.5	3.0
Red Revert	2.0	2.0	2.0	2.0
Added Initial *	–	–	–	–
Maximum Initial *	–	–	–	–
Time Before Reduction *	–	–	–	–
Time To Reduce *	–	–	–	–
Minimum Gap	–	–	–	–
Advance Walk	–	–	–	–
Non Lock Detector	X	–	–	X
Vehicle Recall	–	MIN RECALL	MIN RECALL	–
Dual Entry	–	–	–	–

* These values may be field adjusted. Do not adjust Min Green and Extension times for phases 2 and 6 lower than what is shown. Min Green for all other phases should not be lower than 4 seconds.

Microwave Detection

	2A		6A	
FUNCTION	Sensor 1		Sensor 2	
Channel	1		1	
Phase	2		6	
Direction of Travel	WB		EB	
Type	Priority		Priority	
Level	2	QUEUE	2	QUEUE
Detection Zone (ft)	<750	–	<750	–
Range (ft)	600–100	150–100	600–100	150–100
Enable Speed	Y	Y	Y	Y
Speed Range (mph)	35–100	1–35	35–100	1–35
Enable Estimated Time of Arrival	Y	N	Y	N
Estimated Time of Arrival (sec)	2.5–6.5	–	2.5–6.5	–

Plans Prepared By:

DRMP

DRMP, INC.
8210 UNIVERSITY EXECUTIVE PARK DR.
SUITE 220
CHARLOTTE, NC 28262
NC LICENSE NO. F-1524 (704) 549-4260

Signal Upgrade
Temporary Design 1 - TMP Ph1, S2

DOCUMENT NOT CONSIDERED FINAL UNLESS ALL SIGNATURES COMPLETED

Prepared for: Transportation Mobility and Safety Division, Signal Design Section, NORTH CAROLINA DEPARTMENT OF TRANSPORTATION
750 N.Greenfield Pkwy,Garner,NC 27529

US 23 Bus. (Asheville Hwy)
at
SR 1432 (Skyland Drive) /
SR 1438 (Dillardtown Road)

Division 14 Jackson County Sylva

PLAN DATE:	August 2025	REVIEWED BY:	ZM Esposito
PREPARED BY:	DJ White	REVIEWED BY:	BN Groome

SCALE 0 40 1"=40'

REVISIONS	INIT.	DATE

SEAL
NORTH CAROLINA PROFESSIONAL SEAL 052936 ENGINEER BRITTANY N. GROOME

Signed by: Brittany Groome 8/26/2025
1E0934DE1D9445A...
SIG. INVENTORY NO. 14-072TTI

22-AUG-2025 10:29
pw:\\pwdesp01.bentley.com:PW_HDR_US_East_01:Documents/NCDOT/NCDOT_Western_Div_On-Call_MA/NCDOT_6170_R5600_NC170_US23BUS/6.0_CAD_BIM/6.2_Work_In_Progress/R-5600 NCDOT File Structure/Traffic/Signals/Design/Signal Design/14-072T11_sig_dsn_2024mmdd.dgn
Fernando.Vazquez - AT CHA-FVA20UEZ

Docusign Envelope ID: EDBF09DE-B24D-4F89-928A-48F3924CA521

PROJECT REFERENCE NO.	SHEET NO.
R-5600	Sig. 43.1

18 CHANNEL IP CONFLICT MONITOR PROGRAMMING DETAIL

(remove jumpers and set switches as shown)

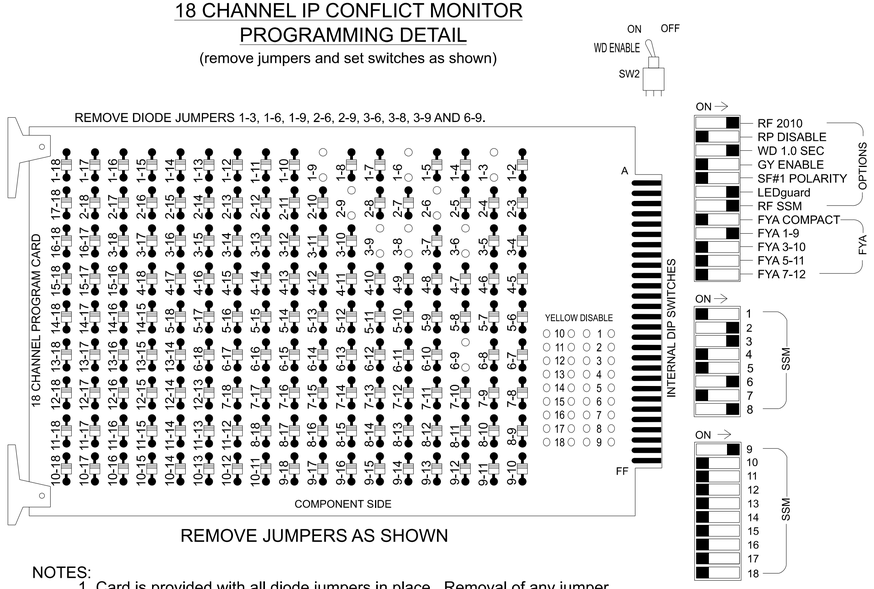

REMOVE JUMPERS AS SHOWN

NOTES:

1. Card is provided with all diode jumpers in place. Removal of any jumper allows its channels to run concurrently.
2. Ensure jumpers SEL2-SEL5 and SEL9 are present on the monitor board.
3. Ensure that the Red Enable is active at all times during normal operation.
4. Integrate monitor with Ethernet network in cabinet.

NOTES

1. To prevent "flash-conflict" problems, insert red flash program blocks for all vehicle load switches in the output file. The installer shall verify that signal heads flash in accordance with the signal plan.
2. Program controller to start up in phase 2 Green No Walk and 6 Green No Walk.
3. The cabinet and controller are part of the NC 107 Time Based System.

EQUIPMENT INFORMATION

Controller.....2070LX
Cabinet.....332 w/ Aux
Software.....Q-Free MAXTIME
Cabinet Mount.....Base
Output File Positions.....18 With Aux. Output File
Load Switches Used.....S1, S2, S4, S8, S11, AUX S1
Phases Used.....1, 2, 6, 8
Overlap "1".....*
Overlap "2".....NOT USED
Overlap "3".....NOT USED
Overlap "4".....NOT USED
Overlap "5".....NOT USED
Overlap "6".....NOT USED
Overlap "7".....*

*See overlap programming detail on sheet 2

SIGNAL HEAD HOOK-UP CHART

LOAD SWITCH NO.	S1	S2	S3	S4	S5	S6	S7	S8	S9	S10	S11	S12	AUX S1	AUX S2	AUX S3	AUX S4	AUX S5	AUX S6
CMU CHANNEL NO.	1	2	13	3	4	14	5	6	15	7	8	16	9	10	17	11	12	18
PHASE	1	2	2 PED	OL7	4	4 PED	5	6	6 PED	7	8	8 PED	OL1	OL2	SPARE	OL3	OL4	SPARE
SIGNAL HEAD NO.	11★	22,23 24	NU	82,83	NU	NU	NU	61,62	NU	NU	81	NU	11★	NU	NU	NU	NU	NU
RED		128		116				134										
YELLOW	*	129						135										
GREEN		130						136										
RED ARROW											107		A121					
YELLOW ARROW				117							108		A122					
FLASHING YELLOW ARROW													A123					
GREEN ARROW	127			118							109							
✋																		
🚶																		

NU = Not Used
* Denotes install load resistor. See load resistor installation detail this sheet.
★ See pictorial of head wiring in detail this sheet.

FYA SIGNAL WIRING DETAIL

(wire signal head as shown)

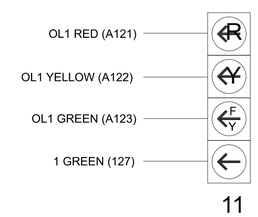

INPUT FILE POSITION LAYOUT

(front view)

		1	2	3	4	5	6	7	8	9	1O	11	12	13	14
FILE "I"	U	∅ 1 1A	SLOT EMPTY	SLOT EMPTY	SLOT EMPTY	SLOT EMPTY	SLOT EMPTY	SLOT EMPTY	SLOT EMPTY	SLOT EMPTY	SLOT EMPTY	SLOT EMPTY	SLOT EMPTY	SLOT EMPTY	FS DC ISOLATOR
	L	NOT USED													ST DC ISOLATOR
FILE "J"	U	SLOT EMPTY	SLOT EMPTY	SLOT EMPTY	SLOT EMPTY	SLOT EMPTY	SLOT EMPTY	SLOT EMPTY	SLOT EMPTY	SLOT EMPTY	SLOT EMPTY	SLOT EMPTY	SLOT EMPTY	SLOT EMPTY	SLOT EMPTY
	L														

EX. : 1A, 2A, ETC. = LOOP NO.'S

FS = FLASH SENSE
ST = STOP TIME

INPUT FILE CONNECTION & PROGRAMMING CHART

LOOP NO.	LOOP TERMINAL	INPUT FILE POS.	PIN NO.	INPUT POINT	DETECTOR NO.	CALL PHASE	DELAY TIME	EXTEND TIME	EXTEND	ADDED INITIAL	CALL	DELAY DURING GREEN
1A	TB2-1,2	I1U	56	18	1	1	15.0		X		X	
				-	29	6	-		X		X	

INPUT FILE POSITION LEGEND: J2L
FILE J
SLOT 2
LOWER

LOAD RESISTOR INSTALLATION DETAIL

(install resistor as shown)

ACCEPTABLE VALUES	
Value (ohms)	Wattage
1.5K - 1.9K	25W (min)
2.0K - 3.0K	10W (min)

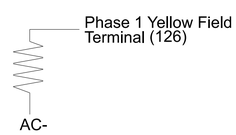

SPECIAL DETECTOR NOTE

1. Install a multi-zone microwave detection system for vehicle detection. Perform installation according to manufacturer's directions and NCDOT engineer -approved mounting locations to accomplish the detection schemes shown on the Signal Design Plans.
2. For Detection Zones 1A and 5A, the equipement placement is typical for a NCDOT installation.

THIS ELECTRICAL DETAIL IS FOR
THE SIGNAL DESIGN: 14-0727T1
DESIGNED: Aug 2025
SEALED: 8/26/2025
REVISED: N/A

Plans Prepared By:

DRMP, INC.
8210 UNIVERSITY EXECUTIVE PARK DR.
SUITE 220
CHARLOTTE, NC 28262
NC LICENSE NO. F-1524 (704) 549-4260

Electrical Detail - Sheet 1 of 2
Temporary Design 1 - TMP Ph1, S2

DOCUMENT NOT CONSIDERED FINAL UNLESS ALL SIGNATURES COMPLETED

Electrical and Programming Details For:

US 23 Bus. (Asheville Hwy)
at
SR 1432 (Skyland Drive) /
SR 1438 (Dillardtown Road)

Division 14 Jackson County Sylva

PLAN DATE:	August 2025	REVIEWED BY:	ZM Esposito
PREPARED BY:	DJ White	REVIEWED BY:	BN Groome

REVISIONS	INIT.	DATE

750 N. Greenfield Pkwy, Garner, NC 27529

SEAL

NORTH CAROLINA PROFESSIONAL SEAL 052936 ENGINEER BRITTANY N. GROOME

Signed by: Brittany Groome 1E0934DE1094454... 8/26/2025
DATE

SIG. INVENTORY NO. 14-0727T1

22-AUG-2025 10:30
s:\Contracts\R-5600 NCDOT File Structure\Traffic\Signals\Design\Signal Management\14-0727\14072T1_sm_ele_2024mmdd.dgn
ss:\Contracts\R-5600 NCDOT Western Div.On-Call_M_\NCDOT_6170_R5600_NC170_US23BUS\6.0_CAD_BIM\6.2_Work_In_Progress\R-5600 NCDOT File Structure\Traffic\Signals\Design\Signal Management\14-0727\14072T1_sm_ele_2024mmdd.dgn
AT CH4-FYA20UE2
Fernando.Vazquez

Docusign Envelope ID: EDBF09DE-B24D-4F89-928A-48F3924CA521

PROJECT REFERENCE NO.	SHEET NO.
R-5600	Sig. 43.2

MAXTIME STARTUP AND SOFTWARE FLASH PROGRAMMING DETAIL

Front Panel
Main Menu >Controller >Unit

Web Interface
Home >Controller >Unit

Modify parameters as shown below and save changes.

Start Up Parameters

StartUp Clearance Hold
6

Unit Flash Parameters

All Red Flash Exit Time
6

OUTPUT CHANNEL CONFIGURATION

Front Panel
Main Menu >Controller >More>Channels>Channels Config

Web Interface
Home >Controller >Advanced IO>Channels>Channel Configuration

Channel Configuration

NOTICE OVERLAP 7 ASSIGNED TO CHANNEL 3

Channel	Control Type	Control Source	Flash Yellow	Flash Red	Flash Alt	MMU Channel
1	Phase Vehicle	1		X	X	1
2	Phase Vehicle	2		X		2
3	Overlap	7		X	X	3
4	Phase Vehicle	4		X		4
5	Phase Vehicle	5		X		5
6	Phase Vehicle	6		X	X	6
7	Phase Vehicle	7		X		7
8	Phase Vehicle	8		X	X	8
9	Overlap	1		X	X	9
10	Overlap	2		X	X	10
11	Overlap	3		X		11
12	Overlap	4		X		12
13	Phase Ped	2				13
14	Phase Ped	4				14
15	Phase Ped	6				15
16	Phase Ped	8				16
17	Overlap	5		X	X	17
18	Overlap	6		X		18

NOTICE FLASH RED

OVERLAP PROGRAMMING

Front Panel
Main Menu >Controller >Overlap >Overlap Parameters/Overlap Timings

Web Interface
Home >Controller >Overlap Configuration >Overlaps

Overlap Plan 1

Overlap	1	7
Type	FYA 4 - Section	Normal
Included Phases	2	1,8
Modifier Phases	1	-
Modifier Overlaps	-	-
Trail Green	0	0
Trail Yellow	0.0	0.0
Trail Red	0.0	0.0

THIS ELECTRICAL DETAIL IS FOR
THE SIGNAL DESIGN: 14-0727T1
DESIGNED: Aug 2025
SEALED: 8/26/2025
REVISED: N/A

Electrical Detail - Sheet 2 of 2
Temporary Design 1 - TMP Ph1, S2

DOCUMENT NOT CONSIDERED FINAL UNLESS ALL SIGNATURES COMPLETED

Plans Prepared By:

DRMP, INC.
8210 UNIVERSITY EXECUTIVE PARK DR.
SUITE 220
CHARLOTTE, NC 28262
NC LICENSE NO. F-1524 (704) 549-4260

Electrical and Programming Details For:

Transportation Mobility and Safety Division
STATE OF NORTH CAROLINA
DEPARTMENT OF TRANSPORTATION
ITS & Signals Management Section
750 N. Greenfield Pkwy, Garner, NC 27529

US 23 Bus. (Asheville Hwy)
at
SR 1432 (Skyland Drive) /
SR 1438 (Dillardtown Road)

Division 14 Jackson County Sylva

PLAN DATE:	August 2025	REVIEWED BY:	ZM Esposito
PREPARED BY:	DJ White	REVIEWED BY:	BN Groome

REVISIONS	INIT.	DATE

SEAL
NORTH CAROLINA PROFESSIONAL SEAL 052936 ENGINEER BRITTANY N. GROOME

Signed by: Brittany Groome 8/26/2025
1E0934DE1094454...
DATE

SIG. INVENTORY NO. 14-0727T1

22-AUG-2025 10:30
wsdot\bzvazquez@DOR.US.East.01\Documents\NCDOT\NCDOT_Western_Div_On-Call_M_\NCDOT_6170_R5600_NC170_US23BUS\6.0_CAD_BIM\6.2_Work_In_Progress\R-5600 NCDOT File Structure\Traffic\Signals\Design\Signal Management\14-0727\14072T1_sm_ele_2024mmdd.dgn
Fernando.Vazquez AT CH4-FVAZQUEZ

Docusign Envelope ID: EDBF09DE-B24D-4F89-928A-48F3924CA521

PROJECT REFERENCE NO.	SHEET NO.
R-5600	Sig-44.0

PHASING DIAGRAM

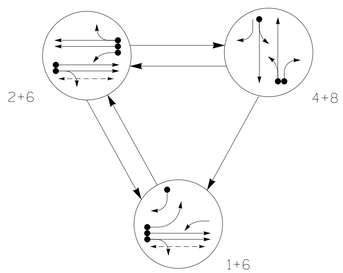

TABLE OF OPERATION

SIGNAL FACE	PHASE 1+6	PHASE 2+6	PHASE 4+8	PHASE FLASH
11	←-	-R-	-R-	-R-
21	F Y	F Y	-R-	-R-
22, 23, 24	R	G	R	R
41, 42, 44	R	R	G	R
43	R→	R→	F Y	R→
61, 62, 63	G	G	R	R
81, 82, 84	R	R	G	R
83	→-	R	F Y	R
P61, P62	W	W	DW	DRK

SIGNAL FACE I.D.

All Heads L.E.D.

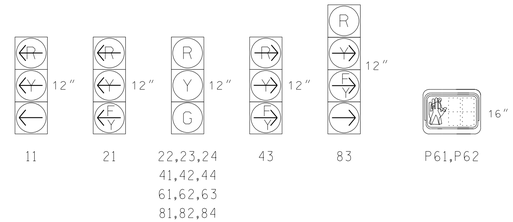

MAXTIME DETECTOR INSTALLATION CHART

DETECTOR					PROGRAMMING							
ZONE	SIZE (FT)	DISTANCE FROM STOPBAR (FT)	TURNS	NEW LOOP	CALL PHASE	DELAY TIME	EXTEND TIME	EXTEND	ADDED INITIAL	CALL	DELAY DURING GREEN	NEW CARD
1A	*	0	*	X	1	3.0	-	X	-	X	-	*
1B	*	0	*	X	1	15.0	-	X	-	X	-	*
2B	*	0	*	X	2	-	-	X	-	X	-	*
4A	*	0	*	X	4	3.0	-	X	-	X	-	*
4B	*	0	*	X	4	-	-	X	-	X	-	*
4C	*	0	*	X	4	-	-	X	-	X	-	*
8A	*	0	*	X	8	3.0	-	X	-	X	-	*

* Multi-Zone Microwave Detection Zone

3 Phase
Fully Actuated
(Time Based Coordination)

NOTES

1. Refer to "Roadway Standard Drawings NCDOT" dated January 2024 and "Standard Specifications for Roads and Structures" dated January 2024.
2. Do not program signal for late night flashing operation unless otherwise directed by the Engineer.
3. Phase 1 may be lagged.
4. Remove louvers from signal heads 22 and 23.
5. Set all detector units to presence mode.
6. This intersection uses multi-zone microwave detection. Install detectors according to the manufacturer's instructions to achieve the desired detection.
7. Maximum times shown in timing chart are for free-run operation only. Coordinated signal system timing values supersede these values.

PHASING DIAGRAM DETECTION LEGEND

- DETECTED MOVEMENT
- UNDETECTED MOVEMENT (OVERLAP)
- UNSIGNALIZED MOVEMENT
- PEDESTRIAN MOVEMENT

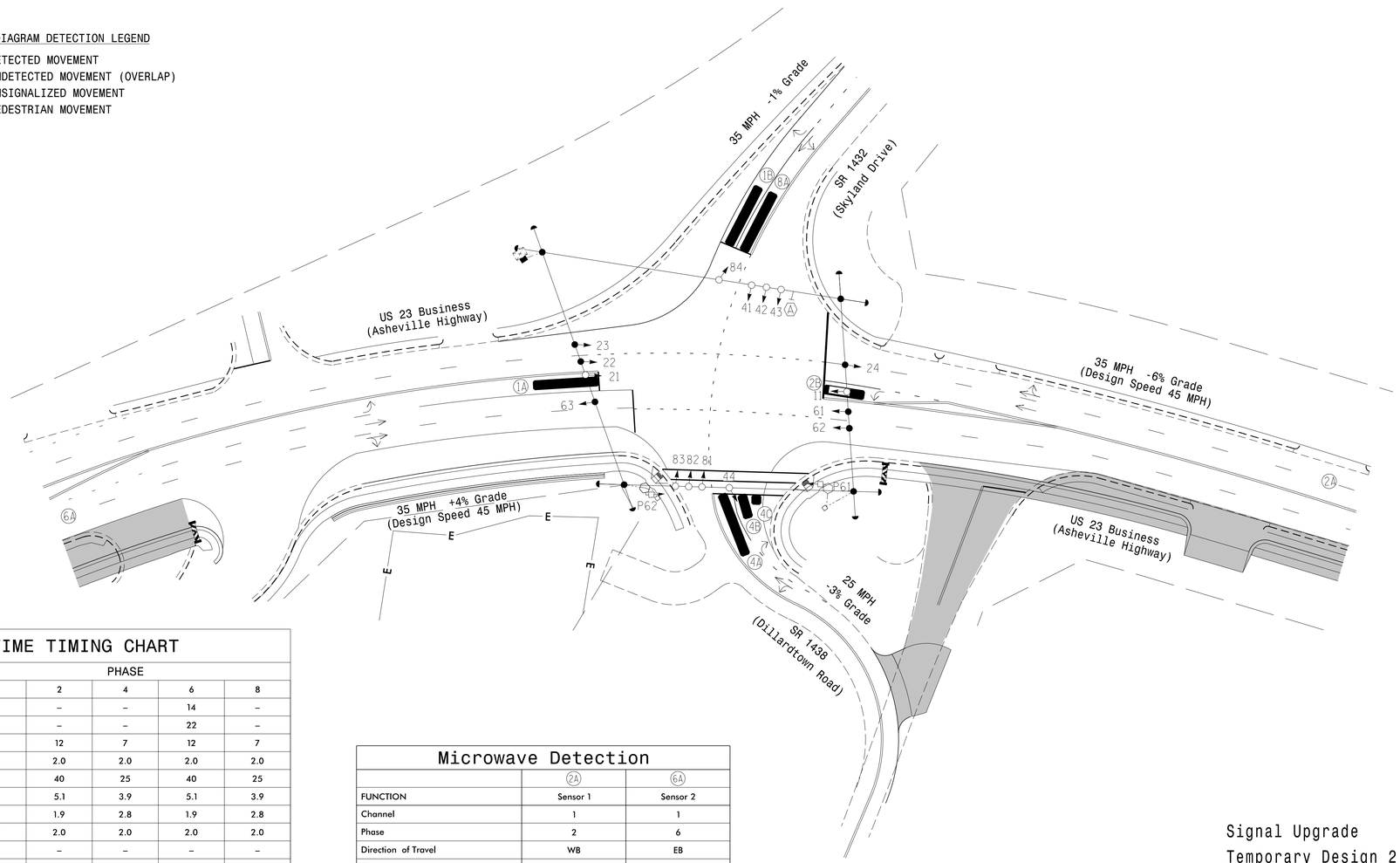

LEGEND

PROPOSED		EXISTING
	Traffic Signal Head	
	Modified Signal Head	N/A
	Sign	
	Pedestrian Signal Head With Push Button & Sign	
	Signal Pole with Guy	
	Signal Pole with Sidewalk Guy	
	Inductive Loop Detector	
	Controller & Cabinet	
	Junction Box	
	Oversized Junction Box	
	2-in Underground Conduit	
N/A	Right of Way	
	Directional Arrow	
DD	Directional Drill	N/A
	Non-Intrusive Detection Zone	
	Construction Zone	N/A
N/A	Temp. Construction Easement	E
N/A	Portable Concrete Barrier	
N/A	Barricade	
A	"NO TURN ON RED" Sign (R10-11a)	A

MAXTIME TIMING CHART

FEATURE	PHASE 1	PHASE 2	PHASE 4	PHASE 6	PHASE 8
Walk *	–	–	–	14	–
Ped Clear *	–	–	–	22	–
Min Green	7	12	7	12	7
Passage *	2.0	2.0	2.0	2.0	2.0
Max 1 *	25	40	25	40	25
Yellow Change	3.0	5.1	3.9	5.1	3.9
Red Clear	2.9	1.9	2.8	1.9	2.8
Red Revert	2.0	2.0	2.0	2.0	2.0
Added Initial *	–	–	–	–	–
Maximum Initial *	–	–	–	–	–
Time Before Reduction *	–	–	–	–	–
Time To Reduce *	–	–	–	–	–
Minimum Gap	–	–	–	–	–
Advance Walk	–	–	–	7	–
Non Lock Detector	X	–	X	–	X
Vehicle Recall	–	MIN RECALL	–	MIN RECALL	–
Dual Entry	–	–	X	–	X

* These values may be field adjusted. Do not adjust Min Green and Extension times for phases 2 and 6 lower than what is shown. Min Green for all other phases should not be lower than 4 seconds.

Microwave Detection

	2A		6A	
FUNCTION	Sensor 1		Sensor 2	
Channel	1		1	
Phase	2		6	
Direction of Travel	WB		EB	
Type	Priority		Priority	
Level	2	QUEUE	2	QUEUE
Detection Zone (ft)	<750	–	<750	–
Range (ft)	600–100	150–100	600–100	150–100
Enable Speed	Y	Y	Y	Y
Speed Range (mph)	35–100	1–35	35–100	1–35
Enable Estimated Time of Arrival	Y	N	Y	N
Estimated Time of Arrival (sec)	2.5–6.5	–	2.5–6.5	–

Signal Upgrade
Temporary Design 2 - TMP Ph2, S1

DOCUMENT NOT CONSIDERED FINAL UNLESS ALL SIGNATURES COMPLETED

Plans Prepared By:
DRMP
DRMP, INC.
8210 UNIVERSITY EXECUTIVE PARK DR.
SUITE 220
CHARLOTTE, NC 28262
NC LICENSE NO. F-1524 (704) 549-4260

Prepared for: Transportation Mobility and Safety Division, Signal Design Section, NORTH CAROLINA DEPARTMENT OF TRANSPORTATION
750 N.Greenfield Pkwy,Garner,NC 27529

US 23 Bus. (Asheville Hwy)
at
SR 1432 (Skyland Drive) /
SR 1438 (Dillardtown Road)

Division 14 Jackson County Sylva

PLAN DATE:	August 2025	REVIEWED BY:	ZM Esposito
PREPARED BY:	DJ White	REVIEWED BY:	BN Groome

SCALE 0 40 1"=40'

REVISIONS	INIT.	DATE

SEAL
NORTH CAROLINA PROFESSIONAL SEAL 052936 ENGINEER BRITTANY N. GROOME

Signed by: Brittany Groome 8/26/2025
1E09340E1094454...
DATE

SIG. INVENTORY NO. I4-0727T2

22-AUG-2025 11:13
D:\pwworking\cdot\d1708\n\BDR.US_East_01\Documents\NCDOT\NCDOT_Western_Div_On-Call_M_/NCDOT_6170_R5600_NC170_US23BUS/6.0_CAD_BIM/6.2_Work_In_Progress/R-5600 NCDOT File Structure/Traffic/Signals/Design/Signal Design/I4-0727/I4-0727T2_sig_dsn_2024mmdd.dgn
Fernando.Vazquez AT CH4-FVAZQUEZ

Docusign Envelope ID: EDBF09DE-B24D-4F89-928A-48F3924CA521

PROJECT REFERENCE NO.	SHEET NO.
R-5600	Sig. 44.1

18 CHANNEL IP CONFLICT MONITOR PROGRAMMING DETAIL

(remove jumpers and set switches as shown)

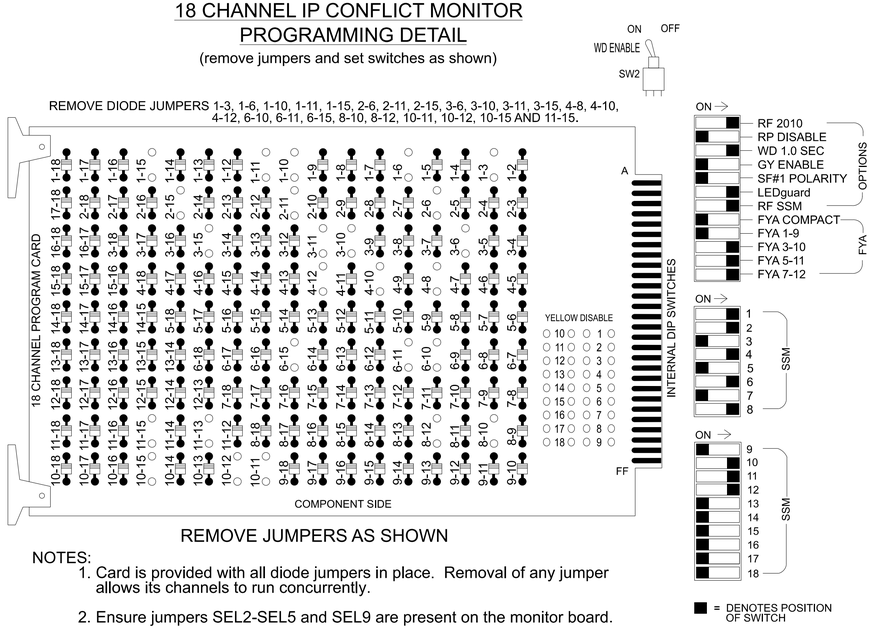

REMOVE JUMPERS AS SHOWN

NOTES:

1. Card is provided with all diode jumpers in place. Removal of any jumper allows its channels to run concurrently.
2. Ensure jumpers SEL2-SEL5 and SEL9 are present on the monitor board.
3. Ensure that the Red Enable is active at all times during normal operation.
4. Integrate monitor with Ethernet network in cabinet.

NOTES

1. To prevent "flash-conflict" problems, insert red flash program blocks for all vehicle load switches in the output file. The installer shall verify that signal heads flash in accordance with the signal plan.
2. Program phases 4 and 8 for Dual Entry.
3. Program controller to start up in phase 2 Green No Walk and 6 Green No Walk.
4. The cabinet and controller are part of the NC 107 Time Based System.

EQUIPMENT INFORMATION

Controller.....2070LX
Cabinet.....332 w/ Aux
Software.....Q-Free MAXTIME
Cabinet Mount.....Base
Output File Positions.....18 With Aux. Output File
Load Switches Used.....S1, S2, S4, S5, S8, S9, S11, AUX S2, AUX S4, AUX S5
Phases Used.....1, 2, 4, 6, 6PED, 8
Overlap "1".....NOT USED
Overlap "2".....*
Overlap "3".....*
Overlap "4".....*
Overlap "5".....NOT USED
Overlap "6".....NOT USED
Overlap "7".....*

*See overlap programming detail on sheet 2

SIGNAL HEAD HOOK-UP CHART

LOAD SWITCH NO.	S1	S2	S3	S4	S5	S6	S7	S8	S9	S10	S11	S12	AUX S1	AUX S2	AUX S3	AUX S4	AUX S5	AUX S6
CMU CHANNEL NO.	1	2	13	3	4	14	5	6	15	7	8	16	9	10	17	11	12	18
PHASE	1	2	2 PED	OL7	4	4 PED	5	6	6 PED	7	8	8 PED	OL1	OL2	SPARE	OL3	OL4	SPARE
SIGNAL HEAD NO.	11	22,23 24	NU	83★	41,42, 44	NU	NU	61,62, 63	P61, P62	NU	81,82, 84	NU	NU	83★	NU	21★	43★	NU
RED		128			101			134			107			A124				
YELLOW		129		*	102			135			108							
GREEN		130			103			136			109							
RED ARROW	125															A114	A101	
YELLOW ARROW	126													A125		A115	A102	
FLASHING YELLOW ARROW														A126		A116	A103	
GREEN ARROW	127			118														
✋									119									
🚶									121									

NU = Not Used
* Denotes install load resistor. See load resistor installation detail this sheet.
★ See pictorial of head wiring in detail this sheet.

FYA SIGNAL WIRING DETAIL

(wire signal heads as shown)

INPUT FILE POSITION LAYOUT

(front view)

		1	2	3	4	5	6	7	8	9	1O	11	12	13	14
FILE "I"	U	SLOT EMPTY	SLOT EMPTY	SLOT EMPTY	SLOT EMPTY	SLOT EMPTY	SLOT EMPTY	SLOT EMPTY	SLOT EMPTY	SLOT EMPTY	SLOT EMPTY	SLOT EMPTY	SLOT EMPTY	∅ 6 PED ISOLATOR	FS DC ISOLATOR
	L													NOT USED	ST DC ISOLATOR
FILE "J"	U	SLOT EMPTY	SLOT EMPTY	SLOT EMPTY	SLOT EMPTY	SLOT EMPTY	SLOT EMPTY	SLOT EMPTY	SLOT EMPTY	SLOT EMPTY	SLOT EMPTY	SLOT EMPTY	SLOT EMPTY	SLOT EMPTY	SLOT EMPTY
	L														

EX. : 1A, 2A, ETC. = LOOP NO.'S

FS = FLASH SENSE
ST = STOP TIME

INPUT FILE CONNECTION & PROGRAMMING CHART

LOOP NO.	LOOP TERMINAL	INPUT FILE POS.	PIN NO.	INPUT POINT	DETECTOR NO.	CALL PHASE	DELAY TIME	EXTEND TIME	EXTEND	ADDED INITIAL	CALL	DELAY DURING GREEN
PED PUSH BUTTONS												
P61,P62	TB8-7,9	I13U	68	34	6	PED 6						

NOTE:
INSTALL DC ISOLATORS IN INPUT FILE SLOT I13.

INPUT FILE POSITION LEGEND: J2L
FILE J
SLOT 2
LOWER

LOAD RESISTOR INSTALLATION DETAIL

(install resistor as shown)

ACCEPTABLE VALUES	
Value (ohms)	Wattage
1.5K - 1.9K	25W (min)
2.0K - 3.0K	10W (min)

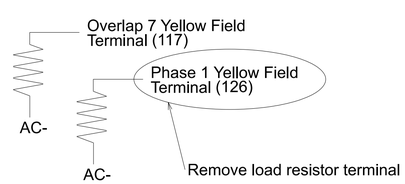

SPECIAL DETECTOR NOTE

Modify the multi-zone microwave detection system for vehicle detection. Perform installation according to manufacturer's directions and NCDOT engineer -approved mounting locations to accomplish the detection schemes shown on the Signal Design Plans.

THIS ELECTRICAL DETAIL IS FOR
THE SIGNAL DESIGN: 14-0727T2
DESIGNED: Aug 2025
SEALED: 8/26/2025
REVISED: N/A

Electrical Detail - Sheet 1 of 2
Temporary Design 2 - TMP Ph2, S1

DOCUMENT NOT CONSIDERED FINAL UNLESS ALL SIGNATURES COMPLETED

Plans Prepared By:
DRMP, INC.
8210 UNIVERSITY EXECUTIVE PARK DR.
SUITE 220
CHARLOTTE, NC 28262
NC LICENSE NO. F-1524 (704) 549-4260

Electrical and Programming Details For:

Transportation Mobility and Safety Division, Traffic Engineering & Signals Management Section, STATE OF NORTH CAROLINA DEPARTMENT OF TRANSPORTATION

750 N. Greenfield Pkwy, Garner, NC 27529

US 23 Bus. (Asheville Hwy)
at
SR 1432 (Skyland Drive) /
SR 1438 (Dillardtown Road)

Division 14 Jackson County Sylva

PLAN DATE:	August 2025	REVIEWED BY:	ZM Esposito
PREPARED BY:	DJ White	REVIEWED BY:	BN Groome

REVISIONS	INIT.	DATE

SEAL
NORTH CAROLINA PROFESSIONAL SEAL 052936 ENGINEER BRITTANY N. GROOME

Signed by: Brittany Groome 8/26/2025
1E0934DE1094454...
DATE

SIG. INVENTORY NO. 14-0727T2

22-AUG-2025 18:10
wsdot/docusign32:1HDR_US_East_01/Documents/NCDOT/NCDOT_Western_Div_On-Call_M_/NCDOT_6170_R5600_NCTTO_US23BUS/6.0_CAD_BIM/6.2_Work_In_Progress/R-5600 NCDOT File Structure/Traffic/Signals/Design/Signal Management/14-0727/14072T2_sm_ele_2024mmds.dgn
Fernando.Vazquez AT CH4-FVA20UE2

Docusign Envelope ID: EDBF09DE-B24D-4F89-928A-48F3924CA521

OUTPUT CHANNEL CONFIGURATION

Front Panel
Main Menu >Controller >More>Channels>Channels Config

Web Interface
Home >Controller >Advanced IO>Channels>Channel Configuration

Channel Configuration

NOTICE OVERLAP 7 ASSIGNED TO CHANNEL 3

Channel	Control Type	Control Source	Flash Yellow	Flash Red	Flash Alt	MMU Channel
1	Phase Vehicle	1		X	X	1
2	Phase Vehicle	2		X		2
3	Overlap	7		X	X	3
4	Phase Vehicle	4		X		4
5	Phase Vehicle	5		X		5
6	Phase Vehicle	6		X	X	6
7	Phase Vehicle	7		X		7
8	Phase Vehicle	8		X	X	8
9	Overlap	1		X	X	9
10	Overlap	2		X	X	10
11	Overlap	3		X		11
12	Overlap	4		X		12
13	Phase Ped	2				13
14	Phase Ped	4				14
15	Phase Ped	6				15
16	Phase Ped	8				16
17	Overlap	5		X	X	17
18	Overlap	6		X		18

NOTICE FLASH RED

MAXTIME STARTUP AND SOFTWARE FLASH PROGRAMMING DETAIL

Front Panel
Main Menu >Controller >Unit

Web Interface
Home >Controller >Unit

Modify parameters as shown below and save changes.

Start Up Parameters

StartUp Clearance Hold
6

Unit Flash Parameters

All Red Flash Exit Time
6

OVERLAP PROGRAMMING

Front Panel
Main Menu >Controller >Overlap >Overlap Parameters/Overlap Timings

Web Interface
Home >Controller >Overlap Configuration >Overlaps

Overlap Plan 1

Overlap	2	3	4	7
Type	FYA 4 - Section	FYA 4 - Section	FYA 4 - Section	Normal
Included Phases	8	6	4	1
Modifier Phases	1	-	-	-
Modifier Overlaps	-	-	-	-
Trail Green	0	0	0	0
Trail Yellow	0.0	0.0	0.0	0.0
Trail Red	0.0	0.0	0.0	0.0

FLASHER CIRCUIT MODIFICATION DETAIL

IN ORDER TO INSURE THAT SIGNALS FLASH CONCURRENTLY ON THE SAME APPROACH, MAKE THE FOLLOWING FLASHER CIRCUIT CHANGES:

1. ON REAR OF PDA - REMOVE WIRE FROM TERM. T2-4 AND TERMINATE ON T2-2.
2. ON REAR OF PDA - REMOVE WIRE FROM TERM. T2-5 AND TERMINATE ON T2-3.
3. REMOVE FLASHER UNIT 2.

THE CHANGES LISTED ABOVE TIES ALL PHASES AND OVERLAPS TO FLASHER UNIT 1.

COUNTDOWN PEDESTRIAN SIGNAL OPERATION

Countdown Ped Signals are required to display timing only during Ped Clearance Interval. Consult Ped Signal Module user's manual for instructions on selecting this feature.

THIS ELECTRICAL DETAIL IS FOR
THE SIGNAL DESIGN: 14-0727T2
DESIGNED: Aug 2025
SEALED: 8/26/2025
REVISED: N/A

Electrical Detail - Sheet 1 of 2
Temporary Design 2 - TMP Ph2, S1

DOCUMENT NOT CONSIDERED FINAL UNLESS ALL SIGNATURES COMPLETED

Plans Prepared By:

DRMP, INC.
8210 UNIVERSITY EXECUTIVE PARK DR.
SUITE 220
CHARLOTTE, NC 28262
NC LICENSE NO. F-1524 (704) 549-4260

Electrical and Programming Details For:

Transportation Mobility and Safety Division
STATE OF NORTH CAROLINA
DEPARTMENT OF TRANSPORTATION
ITS & Signals Management Section
750 N. Greenfield Pkwy, Garner, NC 27529

US 23 Bus. (Asheville Hwy)
at
SR 1432 (Skyland Drive) /
SR 1438 (Dillardtown Road)

Division 14 Jackson County Sylva

PLAN DATE:	August 2025	REVIEWED BY:	ZM Esposito
PREPARED BY:	DJ White	REVIEWED BY:	BN Groome

REVISIONS	INIT.	DATE

SEAL
NORTH CAROLINA PROFESSIONAL SEAL 052936 ENGINEER BRITTANY N. GROOME

Signed by: Brittany Groome 8/26/2025
-TEKNIQUE\TONASE-
DATE

SIG. INVENTORY NO. 14-0727T2

22-AUG-2025 10:31
User:Fernando.Vazquez2
Fernando.Vazquez2 - AT CH4-FVAZQUEZ
ss/R-5600 NCDOT File Structure/Traffic/Signals/Design/Signal Management/14-0727/14072172_sm_ele_2024mmdd.dgn
22_Western_Div_Dn-Coll_MC/NCDOT_6170_R5600_NC170_US23BUS/6.0_CAD_BIM/6.2_Work_In_Progress/R-5600 NCDOT
NOR_US_East_01/Documents/NCDOT/NCDOT_Western_Div_Dn-Coll_MC/NCDOT_6170_US23BUS/6.0_CAD_BIM/6.2_Work_In_Progress/R-5600 NCDOT

Docusign Envelope ID: EDBF09DE-B24D-4F89-928A-48F3924CA521

PROJECT REFERENCE NO.	SHEET NO.
R-5600	Sig-45.0

PHASING DIAGRAM

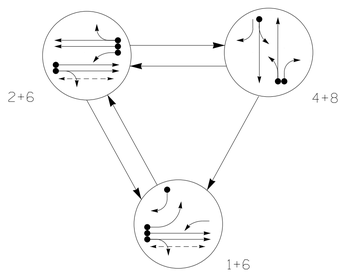

TABLE OF OPERATION

SIGNAL FACE	PHASE 1+6	PHASE 2+6	PHASE 4+8	FLASH
11	←R	←R	←R	←R
21	←F/Y	←F/Y	←R	←R
22, 23, 24	R	G	R	R
41, 42, 44	R	R	G	R
43	R→	R→	F/Y→	R→
61, 62, 63	G	G	R	R
81, 82, 84	R	R	G	R
83	→	R	F/Y→	R
P61, P62	W	W	DW	DRK

SIGNAL FACE I.D.

All Heads L.E.D.

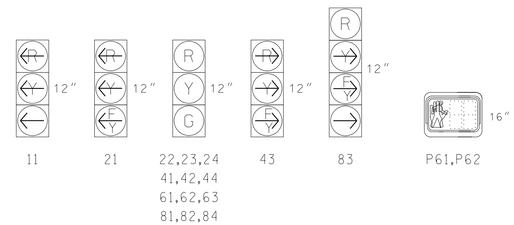

MAXTIME DETECTOR INSTALLATION CHART

DETECTOR					PROGRAMMING							
ZONE	SIZE (FT)	DISTANCE FROM STOPBAR (FT)	TURNS	NEW LOOP	CALL PHASE	DELAY TIME	EXTEND TIME	EXTEND	ADDED INITIAL	CALL	DELAY DURING GREEN	NEW CARD
1A	*	0	*	X	1	3.0	-	X	-	X	-	*
1B	*	0	*	X	1	15.0	-	X	-	X	-	*
2B	*	0	*	X	2	3.0	-	X	-	X	-	*
4A	*	+5	*	X	4	3.0	-	X	-	X	-	*
4B	*	+5	*	X	4	-	-	X	-	X	-	*
4C	*	+5	*	X	4	-	-	X	-	X	-	*
8A	*	0	*	X	8	3.0	-	X	-	X	-	*

* Multi-Zone Microwave Detection Zone

3 Phase
Fully Actuated
(Time Based Coordination)

NOTES

1. Refer to "Roadway Standard Drawings NCDOT" dated January 2024 and "Standard Specifications for Roads and Structures" dated January 2024.
2. Do not program signal for late night flashing operation unless otherwise directed by the Engineer.
3. Phase 1 may be lagged.
4. Reposition existing signal heads numbered 11, 21, 22, 23, 51, 61, 62 and 63.
5. Set all detector units to presence mode.
6. This intersection uses multi-zone microwave detection. Install detectors according to the manufacturer's instructions to achieve the desired detection.
7. Maximum times shown in timing chart are for free-run operation only. Coordinated signal system timing values supersede these values.

PHASING DIAGRAM DETECTION LEGEND

- DETECTED MOVEMENT
- UNDETECTED MOVEMENT (OVERLAP)
- UNSIGNALIZED MOVEMENT
- PEDESTRIAN MOVEMENT

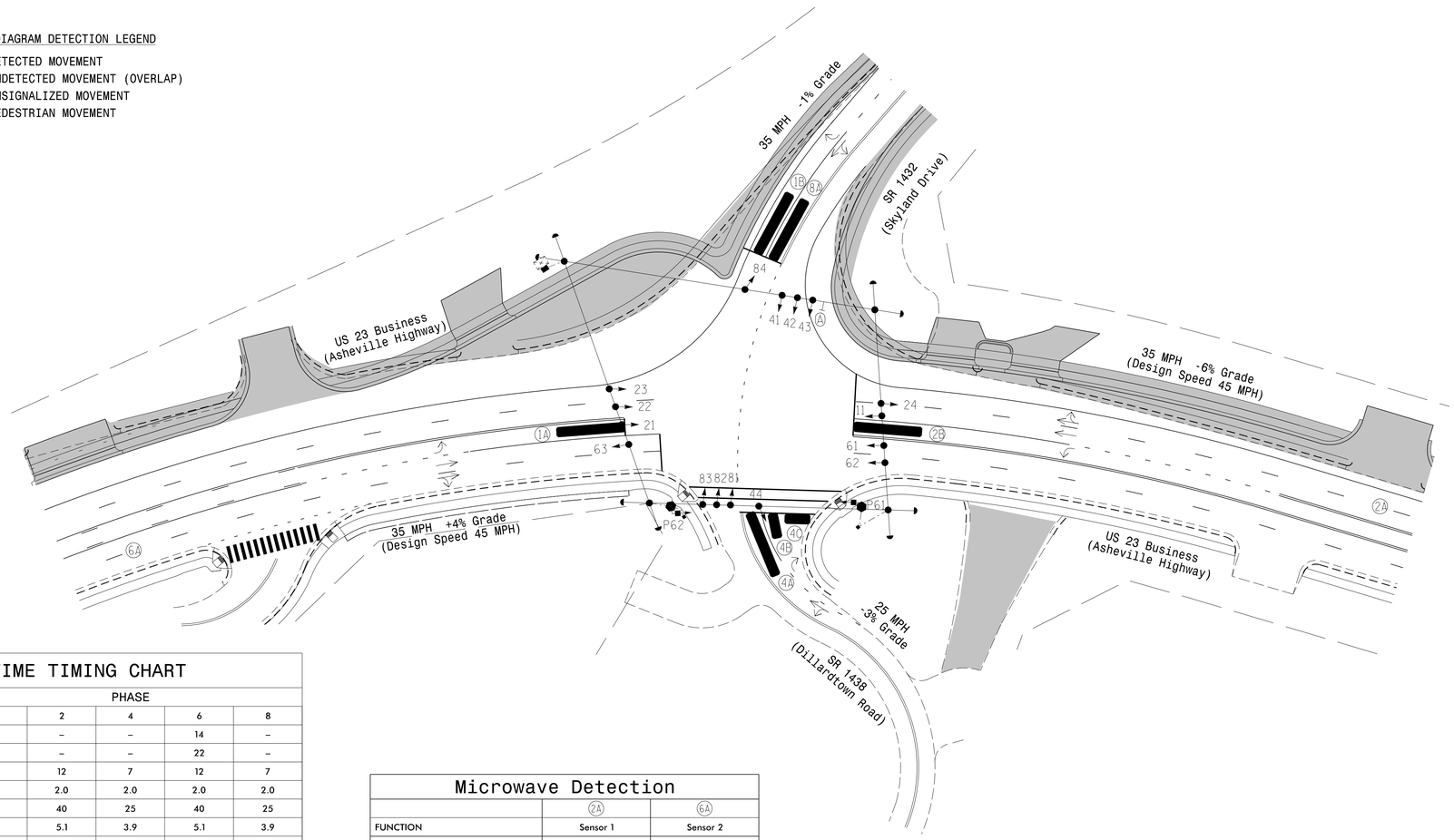

LEGEND

PROPOSED		EXISTING
	Traffic Signal Head	
	Modified Signal Head	N/A
	Sign	
	Pedestrian Signal Head With Push Button & Sign	
	Signal Pole with Guy	
	Signal Pole with Sidewalk Guy	
	Inductive Loop Detector	
	Controller & Cabinet	
	Junction Box	
	Oversized Junction Box	
	2-in Underground Conduit	
N/A	Right of Way	
	Directional Arrow	
	Directional Drill	N/A
	Non-Intrusive Detection Zone	
	Construction Zone	N/A
A	"NO TURN ON RED" Sign (R10-11a)	A

MAXTIME TIMING CHART

FEATURE	PHASE 1	PHASE 2	PHASE 4	PHASE 6	PHASE 8
Walk *	–	–	–	14	–
Ped Clear *	–	–	–	22	–
Min Green	7	12	7	12	7
Passage *	2.0	2.0	2.0	2.0	2.0
Max 1 *	25	40	25	40	25
Yellow Change	3.0	5.1	3.9	5.1	3.9
Red Clear	2.8	1.7	2.8	1.7	2.8
Red Revert	2.0	2.0	2.0	2.0	2.0
Added Initial *	–	–	–	–	–
Maximum Initial *	–	–	–	–	–
Time Before Reduction *	–	–	–	–	–
Time To Reduce *	–	–	–	–	–
Minimum Gap	–	–	–	–	–
Advance Walk	–	–	–	7	–
Non Lock Detector	X	–	X	–	X
Vehicle Recall	–	MIN RECALL	–	MIN RECALL	–
Dual Entry	–	–	X	–	X

* These values may be field adjusted. Do not adjust Min Green and Extension times for phases 2 and 6 lower than what is shown. Min Green for all other phases should not be lower than 4 seconds.

Microwave Detection

	2A		6A	
FUNCTION	Sensor 1		Sensor 2	
Channel	1		1	
Phase	2		6	
Direction of Travel	WB		EB	
Type	Priority		Priority	
Level	2	QUEUE	2	QUEUE
Detection Zone (ft)	<750	–	<750	–
Range (ft)	600–100	150–100	600–100	150–100
Enable Speed	Y	Y	Y	Y
Speed Range (mph)	35–100	1–35	35–100	1–35
Enable Estimated Time of Arrival	Y	N	Y	N
Estimated Time of Arrival (sec)	2.5–6.5	–	2.5–6.5	–

Signal Upgrade
Temporary Design 3 - TMP Ph2, S2

DOCUMENT NOT CONSIDERED FINAL UNLESS ALL SIGNATURES COMPLETED

Plans Prepared By:

DRMP
DRMP, INC.
8210 UNIVERSITY EXECUTIVE PARK DR.
SUITE 220
CHARLOTTE, NC 28262
NC LICENSE NO. F-1524 (704) 549-4260

Prepared for: Transportation Mobility and Safety Division, Signal Design Section, STATE OF NORTH CAROLINA DEPARTMENT OF TRANSPORTATION
750 N.Greenfield Pkwy,Garner,NC 27529

US 23 Bus. (Asheville Hwy)
at
SR 1432 (Skyland Drive) /
SR 1438 (Dillardtown Road)

Division 14 Jackson County Sylva

PLAN DATE:	August 2025	REVIEWED BY:	ZM Esposito
PREPARED BY:	DJ White	REVIEWED BY:	BN Groome

SCALE 0 40 1"=40'

REVISIONS	INIT.	DATE

SEAL
NORTH CAROLINA PROFESSIONAL SEAL 052936 ENGINEER BRITTANY N GROOME

Signed by: Brittany Groome 1E09340E1094454... 8/26/2025 DATE

SIG. INVENTORY NO. I4-0727T3

22-AUG-2025 11:23
pw:\\Documents:HDR_US_East_01\Documents\NCDOT\NCDOT_Western_Div_On-Call_M_\NCDOT_6170_R5600_NC170_US23BUS\6.0_CAD_BIM\6.2_Work_In_Progress\R-5600 NCDOT File Structure\Traffic\Signals\Design\Signal Design\I4-0727\I4-0727T3_sig_dsn_2024mmdd.dgn
Fernando.Vazquez AT CHA\FVAZQUEZ

Docusign Envelope ID: EDBF09DE-B24D-4F89-928A-48F3924CA521

PROJECT REFERENCE NO.	SHEET NO.
R-5600	Sig.45.1

18 CHANNEL IP CONFLICT MONITOR PROGRAMMING DETAIL

(remove jumpers and set switches as shown)

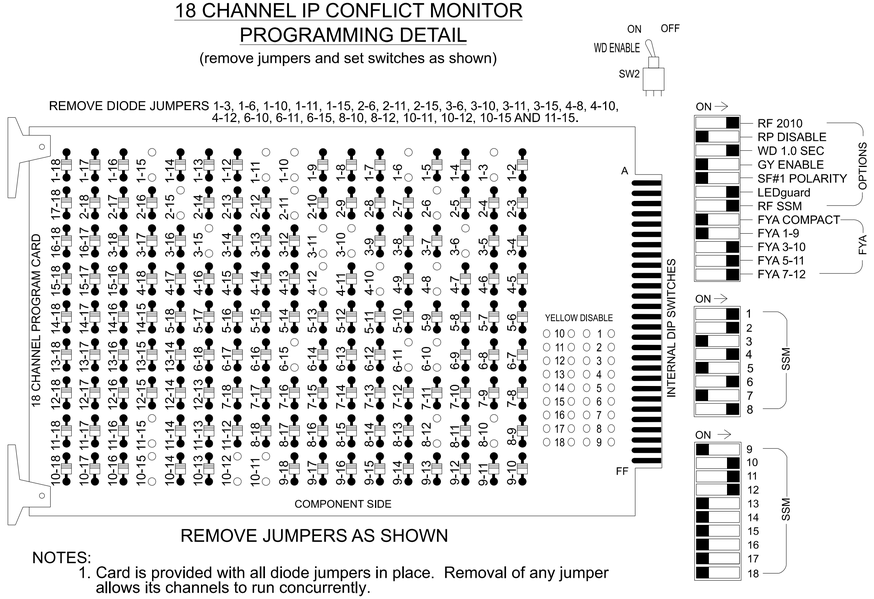

REMOVE JUMPERS AS SHOWN

NOTES:

1. Card is provided with all diode jumpers in place. Removal of any jumper allows its channels to run concurrently.
2. Ensure jumpers SEL2-SEL5 and SEL9 are present on the monitor board.
3. Ensure that the Red Enable is active at all times during normal operation.
4. Integrate monitor with Ethernet network in cabinet.

NOTES

1. To prevent "flash-conflict" problems, insert red flash program blocks for all vehicle load switches in the output file. The installer shall verify that signal heads flash in accordance with the signal plan.
2. Program phases 4 and 8 for Dual Entry.
3. Program controller to start up in phase 2 Green No Walk and 6 Green No Walk.
4. The cabinet and controller are part of the NC 107 Timed Based System.

EQUIPMENT INFORMATION

Controller.....2070LX
Cabinet.....332 w/ Aux
Software.....Q-Free MAXTIME
Cabinet Mount.....Base
Output File Positions.....18 With Aux. Output File
Load Switches Used.....S1, S2, S4, S5, S8, S9, S11, AUX S2, AUX S4, AUX S5
Phases Used.....1, 2, 4, 6PED, 6, 8
Overlap "1".....NOT USED
Overlap "2".....*
Overlap "3".....*
Overlap "4".....*
Overlap "5".....NOT USED
Overlap "6".....NOT USED
Overlap "7".....*

*See overlap programming detail on sheet 2

SIGNAL HEAD HOOK-UP CHART

LOAD SWITCH NO.	S1	S2	S3	S4	S5	S6	S7	S8	S9	S10	S11	S12	AUX S1	AUX S2	AUX S3	AUX S4	AUX S5	AUX S6
CMU CHANNEL NO.	1	2	13	3	4	14	5	6	15	7	8	16	9	10	17	11	12	18
PHASE	1	2	2 PED	OL7	4	4 PED	5	6	6 PED	7	8	8 PED	OL1	OL2	SPARE	OL3	OL4	SPARE
SIGNAL HEAD NO.	11	22,23, 24	NU	83★	41,42, 44	NU	NU	61,62, 63	P61, P62	NU	81,82, 84	NU	NU	83★	NU	21★	43★	NU
RED		128			101			134			107			A124				
YELLOW		129		*	102			135			108							
GREEN		130			103			136			109							
RED ARROW	125															A114	A101	
YELLOW ARROW	126													A125		A115	A102	
FLASHING YELLOW ARROW														A126		A116	A103	
GREEN ARROW	127			118														
✋									119									
🚶									121									

NU = Not Used
* Denotes install load resistor. See load resistor installation detail this sheet.
★ See pictorial of head wiring in detail this sheet.

FYA SIGNAL WIRING DETAIL

(wire signal heads as shown)

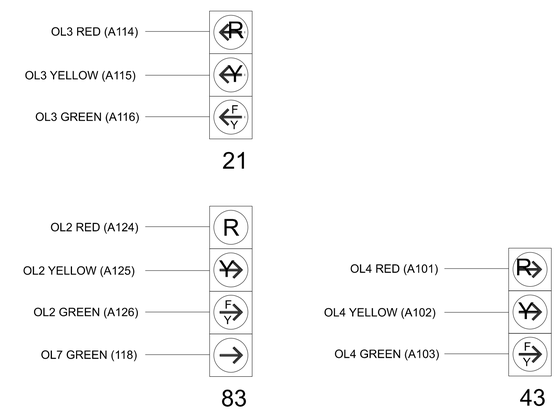

INPUT FILE POSITION LAYOUT

(front view)

		1	2	3	4	5	6	7	8	9	1O	11	12	13	14
FILE "I"	U	SLOT EMPTY	SLOT EMPTY	SLOT EMPTY	SLOT EMPTY	SLOT EMPTY	SLOT EMPTY	SLOT EMPTY	SLOT EMPTY	SLOT EMPTY	SLOT EMPTY	SLOT EMPTY	SLOT EMPTY	∅ 6 PED DC ISOLATOR	FS DC ISOLATOR
	L													NOT USED	ST DC ISOLATOR
FILE "J"	U	SLOT EMPTY	SLOT EMPTY	SLOT EMPTY	SLOT EMPTY	SLOT EMPTY	SLOT EMPTY	SLOT EMPTY	SLOT EMPTY	SLOT EMPTY	SLOT EMPTY	SLOT EMPTY	SLOT EMPTY	SLOT EMPTY	SLOT EMPTY
	L														

EX. : 1A, 2A, ETC. = LOOP NO.'S

FS = FLASH SENSE
ST = STOP TIME

INPUT FILE CONNECTION & PROGRAMMING CHART

LOOP NO.	LOOP TERMINAL	INPUT FILE POS.	PIN NO.	INPUT POINT	DETECTOR NO.	CALL PHASE	DELAY TIME	EXTEND TIME	EXTEND	ADDED INITIAL	CALL	DELAY DURING GREEN
PED PUSH BUTTONS												
P61,P62	TB8-7,9	I13U	68	34	6	PED 6						

NOTE:
INSTALL DC ISOLATORS IN INPUT FILE SLOT I13.

INPUT FILE POSITION LEGEND: J2L
FILE J
SLOT 2
LOWER

LOAD RESISTOR INSTALLATION DETAIL

(install resistors as shown)

ACCEPTABLE VALUES	
Value (ohms)	Wattage
1.5K - 1.9K	25W (min)
2.0K - 3.0K	10W (min)

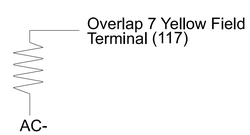

SPECIAL DETECTOR NOTE

Modify the multi-zone microwave detection system for vehicle detection. Perform installation according to manufacturer's directions and NCDOT engineer -approved mounting locations to accomplish the detection schemes shown on the Signal Design Plans.

THIS ELECTRICAL DETAIL IS FOR
THE SIGNAL DESIGN: 14-0727T3
DESIGNED: Aug 2025
SEALED: 8/26/2025
REVISED: N/A

Electrical Detail - Sheet 1 of 2
Temporary Design 3 - TMP Ph2, S2

DOCUMENT NOT CONSIDERED FINAL UNLESS ALL SIGNATURES COMPLETED

Plans Prepared By:
DRMP, INC.
8210 UNIVERSITY EXECUTIVE PARK DR.
SUITE 220
CHARLOTTE, NC 28262
NC LICENSE NO. F-1524 (704) 549-4260

Electrical and Programming Details For:

Transportation Mobility and Safety Division, Traffic Engineering & Signals Management Section, State of North Carolina, Department of Transportation
750 N. Greenfield Pkwy, Garner, NC 27529

US 23 Bus. (Asheville Hwy)
at
SR 1432 (Skyland Drive) /
SR 1438 (Dillardtown Road)

Division 14 Jackson County Sylva

PLAN DATE:	August 2025	REVIEWED BY:	ZM Esposito
PREPARED BY:	DJ White	REVIEWED BY:	BN Groome

REVISIONS	INIT.	DATE

SEAL
NORTH CAROLINA PROFESSIONAL SEAL 052936 ENGINEER BRITTANY N. GROOME

Signed by: Brittany Groome 8/26/2025
1E0934DE1094484...
DATE

SIG. INVENTORY NO. 14-0727T3

22-AUG-2025 10:32
w:\Projects\R5600_US23Bus_Ph2\Design\Signal Management\14-0727\14072T3_sm_ele_2024mmdd.dgn
Fernando.Vazquez AT CH4-FVA20UE2
ress/R-5600 NCDOT File Structure/Traffic/Signals/Design/Signal Management/14-0727/14072T3_sm_ele_2024mmdd.dgn
22-AUG-2025 10:32
w:\Projects\R5600_US23Bus_Ph2\Design\NCDOT\NCDOT_Western_Div_On-Call_M_/NCDOT_6170_R5600_NCTTO_US23BUS/6.0_CAD_BIM/6.2_Work_In_Progress/R-5600 NCDOT File Structure/Traffic/Signals/Design/Signal Management/14-0727/14072T3_sm_ele_2024mmdd.dgn
Fernando.Vazquez AT CH4-FVA20UE2

Docusign Envelope ID: EDBF09DE-B24D-4F89-928A-48F3924CA521

PROJECT REFERENCE NO.	SHEET NO.
R-5600	Sig.45.2

OUTPUT CHANNEL CONFIGURATION

Front Panel
Main Menu >Controller >More>Channels>Channels Config

Web Interface
Home >Controller >Advanced IO>Channels>Channel Configuration

Channel Configuration

NOTICE OVERLAP 7 ASSIGNED TO CHANNEL 3

Channel	Control Type	Control Source	Flash Yellow	Flash Red	Flash Alt	MMU Channel
1	Phase Vehicle	1		X	X	1
2	Phase Vehicle	2		X		2
3	Overlap	7		X	X	3
4	Phase Vehicle	4		X		4
5	Phase Vehicle	5		X		5
6	Phase Vehicle	6		X	X	6
7	Phase Vehicle	7		X		7
8	Phase Vehicle	8		X	X	8
9	Overlap	1		X	X	9
10	Overlap	2		X	X	10
11	Overlap	3		X		11
12	Overlap	4		X		12
13	Phase Ped	2				13
14	Phase Ped	4				14
15	Phase Ped	6				15
16	Phase Ped	8				16
17	Overlap	5		X	X	17
18	Overlap	6		X		18

NOTICE FLASH RED

MAXTIME STARTUP AND SOFTWARE FLASH PROGRAMMING DETAIL

Front Panel
Main Menu >Controller >Unit

Web Interface
Home >Controller >Unit

Modify parameters as shown below and save changes.

Start Up Parameters

StartUp Clearance Hold
6

Unit Flash Parameters

All Red Flash Exit Time
6

OVERLAP PROGRAMMING

Front Panel
Main Menu >Controller >Overlap >Overlap Parameters/Overlap Timings

Web Interface
Home >Controller >Overlap Configuration >Overlaps

Overlap Plan 1

Overlap	2	3	4	7
Type	FYA 4 - Section	FYA 4 - Section	FYA 4 - Section	FYA 4 - Section
Included Phases	8	6	4	1
Modifier Phases	1	-	-	-
Modifier Overlaps	-	-	-	-
Trail Green	0	0	0	0
Trail Yellow	0.0	0.0	0.0	0.0
Trail Red	0.0	0.0	0.0	0.0

FLASHER CIRCUIT MODIFICATION DETAIL

IN ORDER TO INSURE THAT SIGNALS FLASH CONCURRENTLY ON THE SAME APPROACH, MAKE THE FOLLOWING FLASHER CIRCUIT CHANGES:

1. ON REAR OF PDA - REMOVE WIRE FROM TERM. T2-4 AND TERMINATE ON T2-2.
2. ON REAR OF PDA - REMOVE WIRE FROM TERM. T2-5 AND TERMINATE ON T2-3.
3. REMOVE FLASHER UNIT 2.

THE CHANGES LISTED ABOVE TIES ALL PHASES AND OVERLAPS TO FLASHER UNIT 1.

COUNTDOWN PEDESTRIAN SIGNAL OPERATION

Countdown Ped Signals are required to display timing only during Ped Clearance Interval. Consult Ped Signal Module user's manual for instructions on selecting this feature.

THIS ELECTRICAL DETAIL IS FOR
THE SIGNAL DESIGN: 14-0727T3
DESIGNED: Aug 2025
SEALED: 8/26/2025
REVISED: N/A

Electrical Detail - Sheet 2 of 2
Temporary Design 3 - TMP Ph2, S2

DOCUMENT NOT CONSIDERED FINAL UNLESS ALL SIGNATURES COMPLETED

Plans Prepared By:

DRMP
DRMP, INC.
8210 UNIVERSITY EXECUTIVE PARK DR.
SUITE 220
CHARLOTTE, NC 28262
NC LICENSE NO. F-1524 (704) 549-4260

Electrical and Programming Details For:

Transportation Mobility and Safety Division
STATE OF NORTH CAROLINA DEPARTMENT OF TRANSPORTATION
ITS & Signal Management Section
750 N. Greenfield Pkwy, Garner, NC 27529

US 23 Bus. (Asheville Hwy)
at
SR 1432 (Skyland Drive) /
SR 1438 (Dillardtown Road)

Division 14 Jackson County Sylva

PLAN DATE:	August 2025	REVIEWED BY:	ZM Esposito
PREPARED BY:	DJ White	REVIEWED BY:	BN Groome

REVISIONS	INIT.	DATE

SEAL

NORTH CAROLINA PROFESSIONAL SEAL 052936 ENGINEER BRITTANY N. GROOME

Signed by: Brittany Groome 8/26/2025
1E0934DE1094454...
DATE

SIG. INVENTORY NO. 14-0727T3

22-AUG-2025 10:33
wsdot/projects@dot:HDR_US_East_01/Documents/NCDOT/NCDOT_Western_Div_On-Call_M_/NCDOT_6170_R5600_NCT70_US23BUS/6.0_CAD_BIM/6.2_Work_In_Progress/R-5600 NCDOT File Structure/Traffic/Signals/Design/Signal Management/14-0727/14072T3_sm_ele_2024mmdd.dgn
Fernando.Vazquez AT CH4-FVAZQUEZ

Docusign Envelope ID: EDBF09DE-B24D-4F89-928A-48F3924CA521

PROJECT REFERENCE NO.	SHEET NO.
R-5600	Sig-46.0

PHASING DIAGRAM

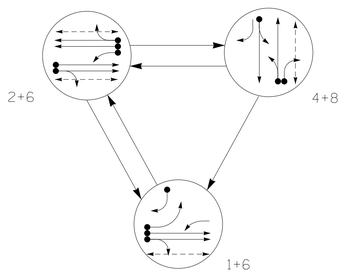

PHASING DIAGRAM DETECTION LEGEND

- DETECTED MOVEMENT
- UNDETECTED MOVEMENT (OVERLAP)
- UNSIGNALIZED MOVEMENT
- PEDESTRIAN MOVEMENT

TABLE OF OPERATION

SIGNAL FACE	PHASE 1+6	PHASE 2+6	PHASE 4+8	FLASH
11	←, R	R	R	R
21	F, R	F, R	R	R
22, 23, 24	R	G	R	R
41, 42, 44	R	R	G	R
43	R→, R	R→	F, R→	R→
61, 62, 63	G	G	R	R
81, 82, 84	R	R	G	R
83	F, R→	R	F, R→	R
P21, P22	DW	W	DW	DRK
P41, P42	DW	DW	W	DRK
P61, P62	W	W	DW	DRK

SIGNAL FACE I.D.

All Heads L.E.D.

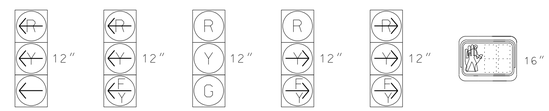

11 | 21 | 22,23,24 41,42,44 61,62,63 81,82,84 | 83 | 43 | P21, P22 P41, P42 P61, P62

MAXTIME DETECTOR INSTALLATION CHART

DETECTOR					PROGRAMMING							
LOOP	SIZE (FT)	DISTANCE FROM STOPBAR (FT)	TURNS	NEW LOOP	CALL PHASE	DELAY TIME	EXTEND TIME	EXTEND	ADDED INITIAL	CALL	DELAY DURING GREEN	NEW CARD
1A	*	0	*	X	1	3.0	-	X	-	X	-	*
1B	*	0	*	X	1	-	-	X	-	X	-	*
2B	*	0	*	X	2	3.0	-	X	-	X	-	*
4A	*	0	*	-	4	3.0	-	X	-	X	-	*
4B	*	0	*	-	4	-	-	X	-	X	-	*
4C	*	0	*	-	4	-	-	X	-	X	-	*
8A	*	0	*	X	8	3.0	-	X	-	X	-	*

* Multi-zone Microwave Detection Zone

3 Phase
Fully Actuated
(Time Based Coordination)

NOTES

1. Refer to "Roadway Standard Drawings NCDOT" dated January 2024 and "Standard Specifications for Roads and Structures" dated January 2024.
2. Do not program signal for late night flashing operation unless otherwise directed by the Engineer.
3. Phase 1 may be lagged.
4. Reposition existing signal heads numbered 11, 21, 22 and 23.
5. Set all detector units to presence mode.
6. This intersection uses multi-zone microwave detection. Install detectors according to the manufacturer's instructions to achieve the desired detection. Coordinaated signal system timing values supersede these values.
7. Maximum times shown in timing chart are for free-run operation only. Coordinated signal system timing values supersede these values.

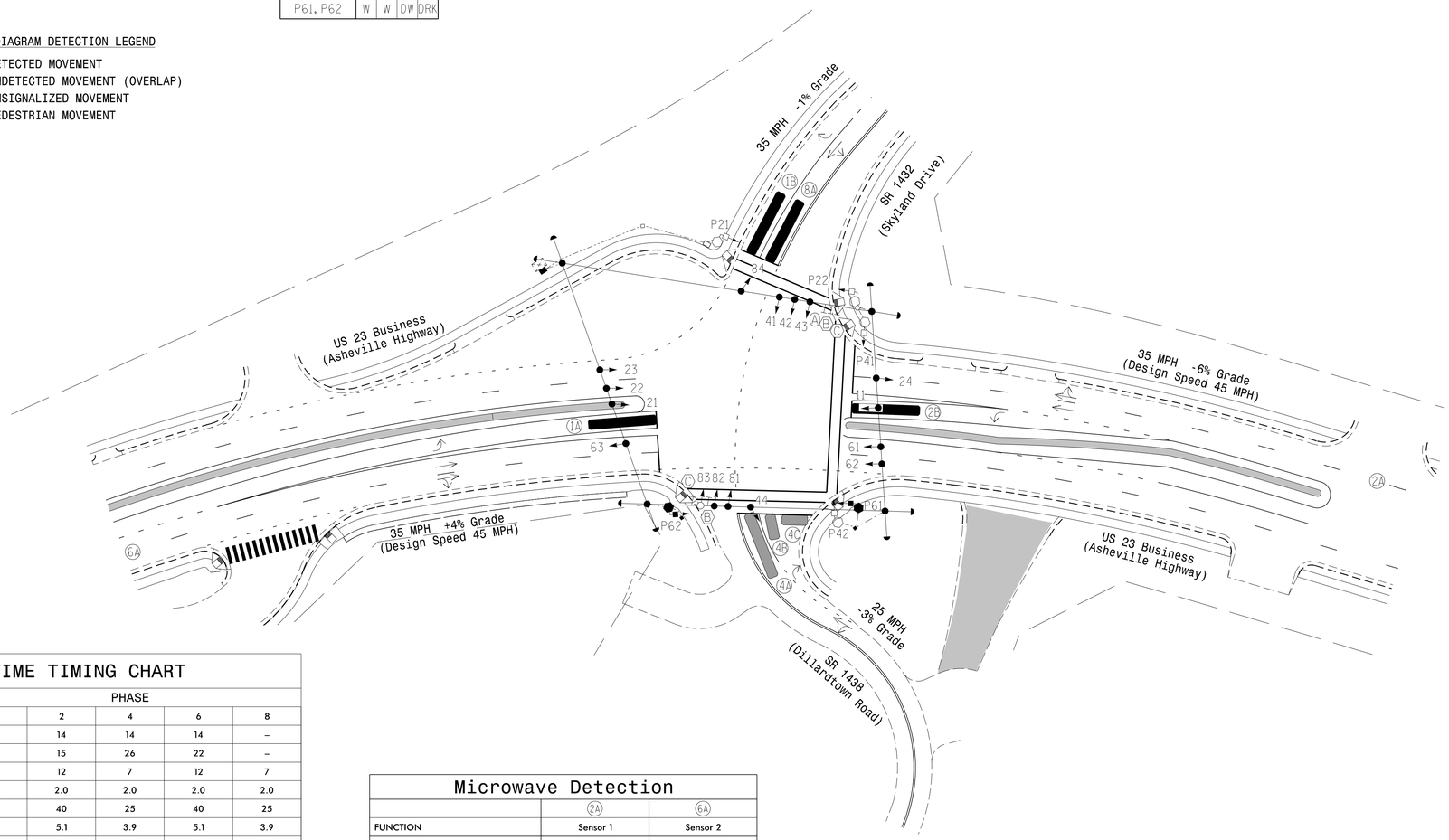

LEGEND

PROPOSED		EXISTING
	Traffic Signal Head	
	Modified Signal Head	N/A
	Sign	
	Pedestrian Signal Head With Push Button & Sign	
	Signal Pole with Guy	
	Signal Pole with Sidewalk Guy	
	Inductive Loop Detector	
	Controller & Cabinet	
	Junction Box	
	Oversized Junction Box	
	2-in Underground Conduit	
N/A	Right of Way	
	Directional Arrow	
DD	Directional Drill	N/A
	Non-Intrusive Detection Zone	
	Construction Zone	N/A
Ⓐ	"NO TURN ON RED" Sign (R10-11a)	Ⓐ
Ⓑ	"RIGHT TURN SIGNAL" Sign (R10-10R)	Ⓑ
Ⓒ	"RIGHT TURN YIELD TO U-TURN" Sign	Ⓒ

MAXTIME TIMING CHART

FEATURE	PHASE 1	PHASE 2	PHASE 4	PHASE 6	PHASE 8
Walk *	–	14	14	14	–
Ped Clear *	–	15	26	22	–
Min Green	7	12	7	12	7
Passage *	2.0	2.0	2.0	2.0	2.0
Max 1 *	25	40	25	40	25
Yellow Change	3.0	5.1	3.9	5.1	3.9
Red Clear	3.4	2.0	3.4	2.0	3.4
Red Revert	2.0	2.0	2.0	2.0	2.0
Added Initial *	–	–	–	–	–
Maximum Initial *	–	–	–	–	–
Time Before Reduction *	–	–	–	–	–
Time To Reduce *	–	–	–	–	–
Minimum Gap	–	–	–	–	–
Advance Walk	–	7	7	7	–
Non Lock Detector	X	–	X	–	X
Vehicle Recall	–	MIN RECALL	–	MIN RECALL	–
Dual Entry	–	–	X	–	X

* These values may be field adjusted. Do not adjust Min Green and Extension times for phases 2 and 6 lower than what is shown. Min Green for all other phases should not be lower than 4 seconds.

Microwave Detection

	2A		6A	
FUNCTION	Sensor 1		Sensor 2	
Channel	1		1	
Phase	2		6	
Direction of Travel	WB		EB	
Type	Priority		Priority	
Level	2	QUEUE	2	QUEUE
Detection Zone (ft)	<750	–	<750	–
Range (ft)	600–100	150–100	600–100	150–100
Enable Speed	Y	Y	Y	Y
Speed Range (mph)	35–100	1–35	35–100	1–35
Enable Estimated Time of Arrival	Y	N	Y	N
Estimated Time of Arrival (sec)	2.5–6.5	–	2.5–6.5	–

Plans Prepared By:

DRMP
DRMP, INC.
8210 UNIVERSITY EXECUTIVE PARK DR.
SUITE 220
CHARLOTTE, NC 28262
NC LICENSE NO. F-1524 (704) 549-4260

Signal Upgrade
Temporary Design 4 - TMP Ph3, S1

DOCUMENT NOT CONSIDERED FINAL UNLESS ALL SIGNATURES COMPLETED

Prepared for: Transportation Mobility and Safety Division, Signal Design Section, STATE OF NORTH CAROLINA DEPARTMENT OF TRANSPORTATION
750 N.Greenfield Pkwy,Garner,NC 27529

US 23 Bus. (Asheville Hwy)
at
SR 1432 (Skyland Drive) /
SR 1438 (Dillardtown Road)

Division 14 Jackson County Sylva

PLAN DATE:	August 2025	REVIEWED BY:	ZM Esposito
PREPARED BY:	DJ White	REVIEWED BY:	BN Groome

SCALE 0 40 1"=40'

REVISIONS	INIT.	DATE

SEAL
NORTH CAROLINA PROFESSIONAL SEAL 052936 ENGINEER BRITTANY N. GROOME

Signed by: Brittany Groome 1E09340E1094454... 8/26/2025 DATE

SIG. INVENTORY NO. I4-0727T4

22-AUG-2025 10:33
pw:\\Documents:HDR_US_East_01\Documents\NCDOT\NCDOT_Western_Div_On-Call_M_\NCDOT_6170_R5600_NC170_US23BUS\6.0_CAD_BIM\6.2_Work_In_Progress\R-5600 NCDOT File Structure\Traffic\Signals\Design\Signal Design\I4-0727\I4-0727T4_sig_dsn_2024mmdd.dgn
User:Fernando.Vazquez@AT CHA-FVAZQUEZ

Docusign Envelope ID: EDBF09DE-B24D-4F89-928A-48F3924CA521

PROJECT REFERENCE NO.	SHEET NO.
R-5600	Sig.46.1

18 CHANNEL IP CONFLICT MONITOR PROGRAMMING DETAIL

(remove jumpers and set switches as shown)

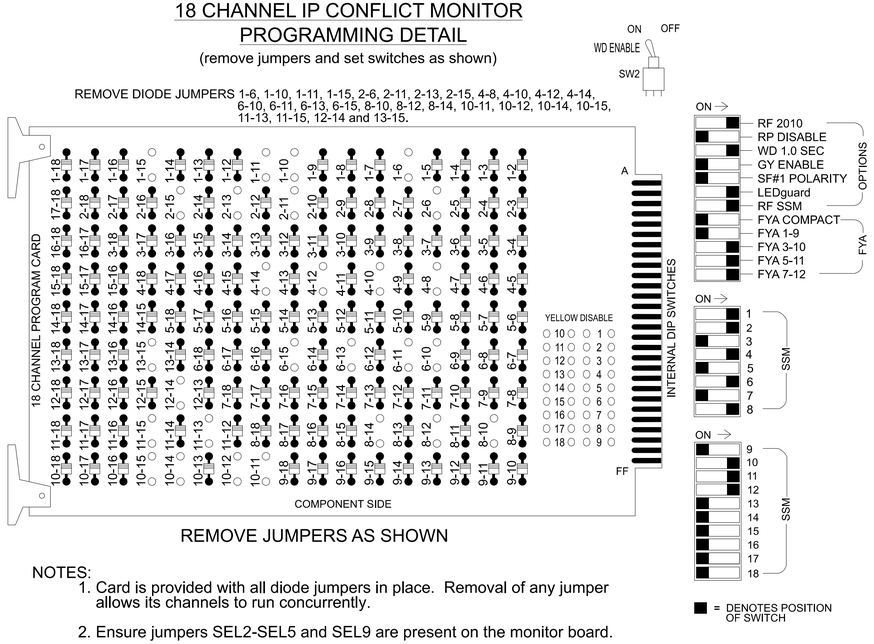

REMOVE JUMPERS AS SHOWN

NOTES:

1. Card is provided with all diode jumpers in place. Removal of any jumper allows its channels to run concurrently.
2. Ensure jumpers SEL2-SEL5 and SEL9 are present on the monitor board.
3. Ensure that the Red Enable is active at all times during normal operation.
4. Integrate monitor with Ethernet network in cabinet.

NOTES

1. To prevent "flash-conflict" problems, insert red flash program blocks for all vehicle load switches in the output file. The installer shall verify that signal heads flash in accordance with the signal plan.
2. Program phases 4 and 8 for Dual Entry and Simultaneous Start.
3. Program controller to start up in phase 2 Green No Walk and 6 Green No Walk.
4. The cabinet and controller are part of the NC 107 Timed Based System.

EQUIPMENT INFORMATION

Controller.....2070LX
Cabinet.....332 w/ Aux
Software.....Q-Free MAXTIME
Cabinet Mount.....Base
Output File Positions.....18 With Aux. Output File
Load Switches Used.....S1, S2, S3, S5, S6, S8, S9, S11, AUX S2, AUX S4, AUX S5
Phases Used.....1, 2, 2PED, 4, 4PED, 6, 6PED, 8
Overlap "1".....NOT USED
Overlap "2".....*
Overlap "3".....*
Overlap "4".....*

*See overlap programming detail on sheet 2

SIGNAL HEAD HOOK-UP CHART

LOAD SWITCH NO.	S1	S2	S3	S4	S5	S6	S7	S8	S9	S10	S11	S12	AUX S1	AUX S2	AUX S3	AUX S4	AUX S5	AUX S6
CMU CHANNEL NO.	1	2	13	3	4	14	5	6	15	7	8	16	9	10	17	11	12	18
PHASE	1	2	2 PED	3	4	4 PED	5	6	6 PED	7	8	8 PED	OL1	OL2	SPARE	OL3	OL4	SPARE
SIGNAL HEAD NO.	11	22,23, 24	P21, P22	NC	41,42, 44	P41, P42	NU	61,62, 63	P61, P62	NU	81,82, 84	NU	NU	83★	NU	21★	43★	NU
RED		128			101			134			107			A124				
YELLOW		129			102			135			108							
GREEN		130			103			136			109							
RED ARROW	125															A114	A101	
YELLOW ARROW	126													A125		A115	A102	
FLASHING YELLOW ARROW														A126		A116	A103	
GREEN ARROW	127																	
✋			113			104			119									
🚶			115			106			121									

NU = Not Used NC = Not Connected

★ Denotes install load resistor. See load resistor installation detail this sheet.

★ See pictorial of head wiring in detail this sheet.

FYA SIGNAL WIRING DETAIL

(wire signal heads as shown)

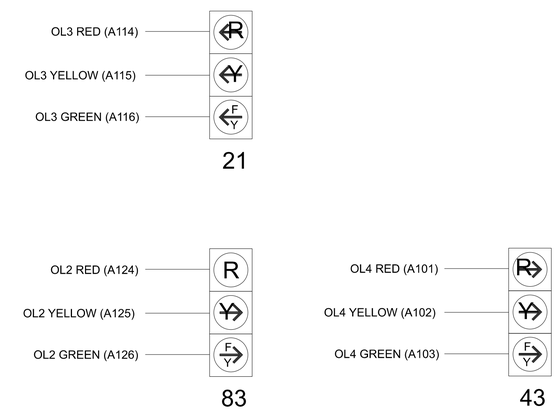

INPUT FILE POSITION LAYOUT

(front view)

		1	2	3	4	5	6	7	8	9	1O	11	12	13	14
FILE "I"	U	SLOT EMPTY	SLOT EMPTY	SLOT EMPTY	SLOT EMPTY	SLOT EMPTY	SLOT EMPTY	SLOT EMPTY	SLOT EMPTY	SLOT EMPTY	SLOT EMPTY	SLOT EMPTY	∅ 2 PED DC ISOLATOR	∅ 6 PED DC ISOLATOR	FS DC ISOLATOR
	L												∅ 4 PED DC ISOLATOR	NOT USED	ST DC ISOLATOR
FILE "J"	U	SLOT EMPTY	SLOT EMPTY	SLOT EMPTY	SLOT EMPTY	SLOT EMPTY	SLOT EMPTY	SLOT EMPTY	SLOT EMPTY	SLOT EMPTY	SLOT EMPTY	SLOT EMPTY	SLOT EMPTY	SLOT EMPTY	SLOT EMPTY
	L														

EX. : 1A, 2A, ETC. = LOOP NO.'S

FS = FLASH SENSE
ST = STOP TIME

INPUT FILE CONNECTION & PROGRAMMING CHART

LOOP NO.	LOOP TERMINAL	INPUT FILE POS.	PIN NO.	INPUT POINT	DETECTOR NO.	CALL PHASE	DELAY TIME	EXTEND TIME	EXTEND	ADDED INITIAL	CALL	DELAY DURING GREEN
PED PUSH BUTTONS												
P21,P22	TB8-4,6	I12U	67	33	2	PED 2						
P41,P42	TB8-5,6	I12L	69	35	4	PED 4						
P61,P62	TB8-7,9	I13U	68	34	6	PED 6						

NOTE:
INSTALL DC ISOLATORS IN INPUT FILE SLOTS I12 AND I13.

INPUT FILE POSITION LEGEND: J2L
FILE J
SLOT 2
LOWER

FLASHER CIRCUIT MODIFICATION DETAIL

IN ORDER TO INSURE THAT SIGNALS FLASH CONCURRENTLY ON THE SAME APPROACH, MAKE THE FOLLOWING FLASHER CIRCUIT CHANGES:

1. ON REAR OF PDA - REMOVE WIRE FROM TERM. T2-4 AND TERMINATE ON T2-2.
2. ON REAR OF PDA - REMOVE WIRE FROM TERM. T2-5 AND TERMINATE ON T2-3.
3. REMOVE FLASHER UNIT 2.

THE CHANGES LISTED ABOVE TIES ALL PHASES AND OVERLAPS TO FLASHER UNIT 1.

SPECIAL DETECTOR NOTE

Modify the multi-zone microwave detection system for vehicle detection. Perform installation according to manufacturer's directions and NCDOT engineer -approved mounting locations to accomplish the detection schemes shown on the Signal Design Plans.

THIS ELECTRICAL DETAIL IS FOR
THE SIGNAL DESIGN: 14-0727T4
DESIGNED: Aug 2025
SEALED: 8/26/2025
REVISED: N/A

Electrical Detail - Sheet 1 of 2
Temporary Design 4 - TMP Ph3, S1

DOCUMENT NOT CONSIDERED FINAL UNLESS ALL SIGNATURES COMPLETED

Plans Prepared By:

DRMP, INC.
8210 UNIVERSITY EXECUTIVE PARK DR.
SUITE 220
CHARLOTTE, NC 28262
NC LICENSE NO. F-1524 (704) 549-4260

Electrical and Programming Details For:

Transportation Mobility and Safety Division
STATE OF NORTH CAROLINA
DEPARTMENT OF TRANSPORTATION
ITS & Signals Management Section
750 N. Greenfield Pkwy, Garner, NC 27529

US 23 Bus. (Asheville Hwy)
at
SR 1432 (Skyland Drive) /
SR 1438 (Dillardtown Road)

Division 14 Jackson County Sylva

PLAN DATE:	August 2025	REVIEWED BY:	ZM Esposito
PREPARED BY:	DJ White	REVIEWED BY:	BN Groome

REVISIONS	INIT.	DATE

SEAL

NORTH CAROLINA PROFESSIONAL SEAL 052936 ENGINEER BRITTANY N. GROOME

Signed by: Brittany Groome 8/26/2025
1E0934DE1094454...
DATE

SIG. INVENTORY NO. 14-0727T4

22-AUG-2025 10:34
wsdot\dgnd01:HDR_US_East_01\Documents\NCDOT\NCDOT_Western_Div_On-Call_M_\NCDOT_6170_R5600_NC170_US23BUS\6.0_CAD_BIM\6.2_Work_In_Progress\R-5600 NCDOT File Structure\Traffic\Signals\Design\Signal Management\14-0727\14072T4_sm_ele_2024mmdd.dgn
Fernando.Vazquez AT CH4-FVAZQUEZ

Docusign Envelope ID: EDBF09DE-B24D-4F89-928A-48F3924CA521

PROJECT REFERENCE NO.	SHEET NO.
R-5600	Sig.46.2

OUTPUT CHANNEL CONFIGURATION

Front Panel
Main Menu >Controller >More>Channels>Channels Config

Web Interface
Home >Controller >Advanced IO>Channels>Channel Configuration

Channel Configuration

NOTICE PHASE VEHICLE 3 ASSIGNED TO CHANNEL 3 →

Channel	Control Type	Control Source	Flash Yellow	Flash Red	Flash Alt	MMU Channel
1	Phase Vehicle	1		X	X	1
2	Phase Vehicle	2		X		2
3	Phase Vehicle	3		X	X	3
4	Phase Vehicle	4		X		4
5	Phase Vehicle	5		X		5
6	Phase Vehicle	6		X	X	6
7	Phase Vehicle	7		X		7
8	Phase Vehicle	8		X	X	8
9	Overlap	1		X	X	9
10	Overlap	2		X	X	10
11	Overlap	3		X		11
12	Overlap	4		X		12
13	Phase Ped	2				13
14	Phase Ped	4				14
15	Phase Ped	6				15
16	Phase Ped	8				16
17	Overlap	5		X	X	17
18	Overlap	6		X		18

↑ NOTICE FLASH RED

MAXTIME STARTUP AND SOFTWARE FLASH PROGRAMMING DETAIL

Front Panel
Main Menu >Controller >Unit

Web Interface
Home >Controller >Unit

Modify parameters as shown below and save changes.

Start Up Parameters

StartUp Clearance Hold
6

Unit Flash Parameters

All Red Flash Exit Time
6

OVERLAP PROGRAMMING

Front Panel
Main Menu >Controller >Overlap >Overlap Parameters/Overlap Timings

Web Interface
Home >Controller >Overlap Configuration >Overlaps

Overlap Plan 1

Overlap	2	3	4
Type	FYA 4 - Section	FYA 4 - Section	FYA 4 - Section
Included Phases	1,8	6	4
Modifier Phases	-	-	-
Modifier Overlaps	-	-	-
Trail Green	0	0	0
Trail Yellow	0.0	0.0	0.0
Trail Red	0.0	0.0	0.0

COUNTDOWN PEDESTRIAN SIGNAL OPERATION

Countdown Ped Signals are required to display timing only during Ped Clearance Interval. Consult Ped Signal Module user's manual for instructions on selecting this feature.

THIS ELECTRICAL DETAIL IS FOR
THE SIGNAL DESIGN: 14-0727T4
DESIGNED: Aug 2025
SEALED: 8/26/2025
REVISED: N/A

Electrical Detail - Sheet 2 of 2
Temporary Design 4 - TMP Ph3, S1

DOCUMENT NOT CONSIDERED FINAL UNLESS ALL SIGNATURES COMPLETED

Plans Prepared By:

DRMP
DRMP, INC.
8210 UNIVERSITY EXECUTIVE PARK DR.
SUITE 220
CHARLOTTE, NC 28262
NC LICENSE NO. F-1524 (704) 549-4260

Electrical and Programming Details For:

Transportation Mobility and Safety Division
STATE OF NORTH CAROLINA DEPARTMENT OF TRANSPORTATION
ITS & Signals Management Section
750 N. Greenfield Pkwy, Garner, NC 27529

US 23 Bus. (Asheville Hwy)
at
SR 1432 (Skyland Drive) /
SR 1438 (Dillardtown Road)

Division 14 Jackson County Sylva

PLAN DATE:	August 2025	REVIEWED BY:	ZM Esposito
PREPARED BY:	DJ White	REVIEWED BY:	BN Groome

REVISIONS	INIT.	DATE

SEAL
NORTH CAROLINA PROFESSIONAL SEAL 052936 ENGINEER BRITTANY N GROOME

Signed by: Brittany Groome 1E0934DE1D9485...
8/26/2025
DATE

SIG. INVENTORY NO. 14-0727T4

22-AUG-2025 11:14
pw:\\pwdenver.bentley.com:PWDR_US_East_01\Documents\NCDOT\NCDOT_Western_Div_On-Call_M_\NCDOT_6170_R5600_NC170_US23BUS\6.0_CAD_BIM\6.2_Work_In_Progress\R-5600 NCDOT File Structure\Traffic\Signals\Design\Signal Management\14-0727\14072T4_sm_ele_2024mmdd.dgn
User:Fernando.Vazquez - AT CHA-FVAZQUEZ

METAL POLE No. 3 and 4

PROJECT REFERENCE NO.	SHEET NO.
R-5600	Sig-46.5

Design Loading for METAL POLE NO. 3

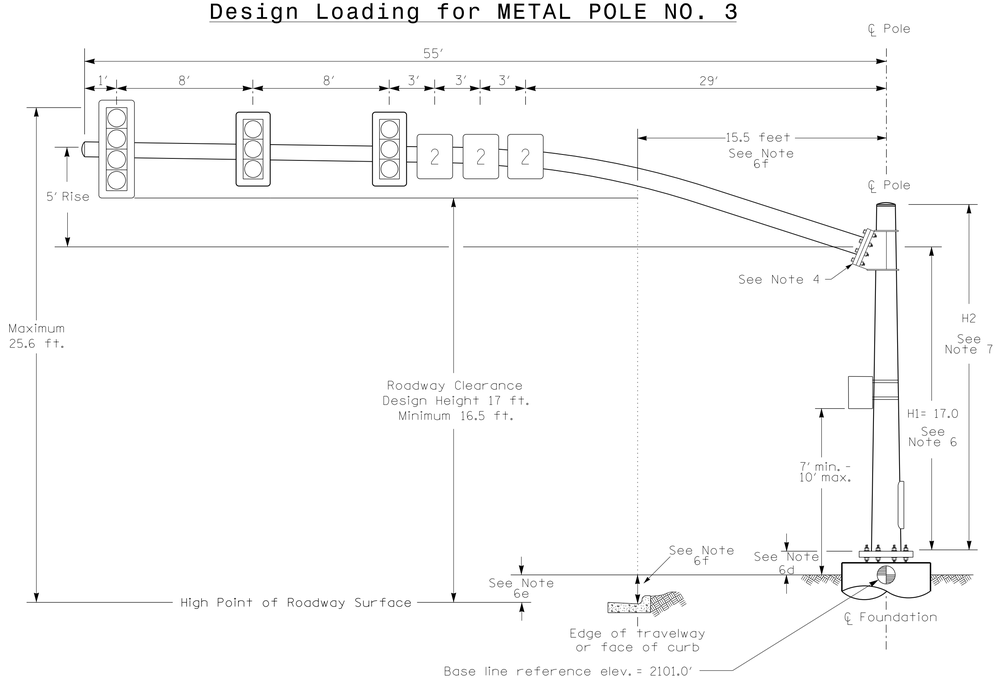

Elevation View

Design Loading for METAL POLE NO. 4

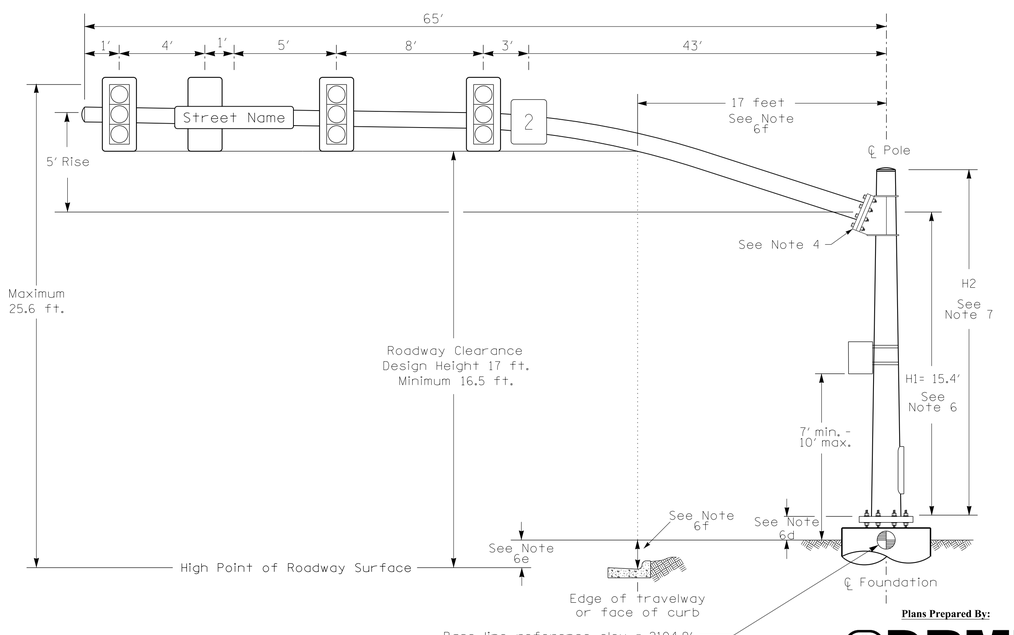

Elevation View

Plans Prepared By:

DRMP, INC.
8210 UNIVERSITY EXECUTIVE PARK DR.
SUITE 220
CHARLOTTE, NC 28262
NC LICENSE NO. F-1524 (704) 549-4260

SPECIAL NOTE

The contractor is responsible for verifying that the mast arm attachment height (H1) will provide the "Design Height" clearance from the roadway before submitting final shop drawings for approval. Verify elevation data below which was obtained by field measurement or from available project survey data.

Elevation Data for Mast Arm Attachment (H1)

Elevation Differences for:	Pole 3	Pole 4
Baseline reference point at ℄ Foundation @ ground level	2101.0 ft.	2104.9 ft.
Elevation difference at High point of roadway surface	+3.5 ft.	+1.9 ft.
Elevation difference at Edge of travelway or face of curb	+3.7 ft.	-0.5 ft.

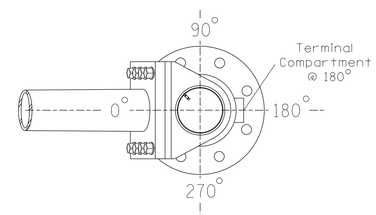

POLE RADIAL ORIENTATION

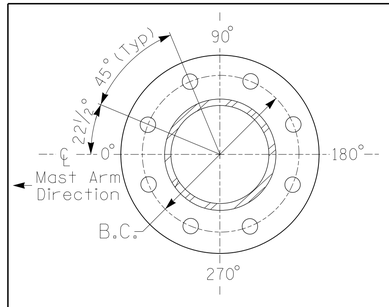

8 BOLT BASE PLATE DETAIL

See Note 5

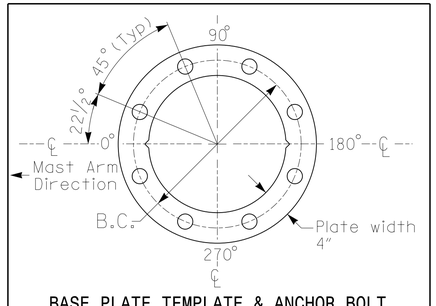

BASE PLATE TEMPLATE & ANCHOR BOLT LOCK PLATE DETAIL

For 8 Bolt Base Plate

MAST ARM LOADING SCHEDULE

LOADING SYMBOL	DESCRIPTION	AREA	SIZE	WEIGHT
	RIGID MOUNTED SIGNAL HEAD 12″-4 SECTION-WITH BACKPLATE	11.5 S.F.	25.5″W X 66.0″L	74 LBS
	RIGID MOUNTED SIGNAL HEAD 12″-3 SECTION-WITH BACKPLATE	9.3 S.F.	25.5″W X 52.5″L	60 LBS
2	SIGN RIGID MOUNTED	7.5 S.F.	30.0″W X 36.0″L	14 LBS
Street Name	STREET NAME SIGN RIGID MOUNTED	16.0 S.F.	24.0″W X 96.0″L	36 LBS

NOTES

DESIGN REFERENCE MATERIAL

1. Design the traffic signal structure and foundation in accordance with:
   - The 1st Edition 2015 AASHTO LRFD "Standard Specifications for Structural Supports for Highway Signs, Luminaires, and Traffic Signals, including all of the latest interim revisions.
   - The 2024 NCDOT "Standard Specifications for Roads and Structures." The latest addenda to the specifications can be found in the traffic signal project special provisions.
   - The 2024 NCDOT Roadway Standard Drawings.
   - The traffic signal project plans and special provisions.
   - The NCDOT "Metal Pole Standards" located at the following NCDOT website: https://connect.ncdot.gov/resources/safety/Pages/ITS-Design-Resources.aspx

DESIGN REQUIREMENTS

2. Design the traffic signal structure using the loading conditions shown in the elevation views. These are anticipated worst case "design loads" and may not represent the actual loads that will be applied at the time of the installation. The contractor should refer to the traffic signal plans for the actual loads that will be applied at the time of the installation.
3. Design all signal supports using force ratios that do not exceed 0.9.
4. A clamp-type bolted mast arm-to-pole connection may be used instead of the welded ring stiffened box connection shown as long as the connection meets all of the design requirements.
5. Design base plate with 8 anchor bolt holes. Provide 2 inch x 60 inch anchor bolts.
6. The mast arm attachment height (H1) shown is based on the following design assumptions:
   a. Nominal vertical rise in mast arm is 5 feet as measured from the centerline of the arm base to the centerline of the free end of the arm.
   b. Signal heads are rigidly mounted and vertically centered on the mast arm.
   c. The roadway clearance height for design is as shown in the elevation views.
   d. The top of the pole base plate is 0.75 feet above the ground elevation.
   e. Refer to the Elevation Data Chart for the elevation differences between the proposed foundation ground level and the high point of the roadway.
   f. Provide horizontal distance from the proposed centerline of the foundation to the edge of travelway. Refer to the Elevation Data Chart for elevation difference between the proposed foundation ground level and the edge of travelway. This information is necessary to ensure that the roadway clearance is maintained at the edge of the travelway and to aid in the camber design of the arm.
7. The pole manufacturer will determine the total height (H2) of each pole using the greater of the following:
   - Mast arm attachment height (H1) plus 2 feet, or
   - H1 plus 1/2 of the total height of the mast arm attachment assembly plus 1 foot.
8. If pole location adjustments are required, the contractor must gain approval from the Engineer as this may affect the mast arm lengths and arm attachment heights. The contractor may contact the Signal Design Section Senior Structural Engineer for assistance at (919) 814-5000.
9. The contractor is responsible for verifying that the mast arm length shown will allow proper positioning of the signal heads over the roadway.
10. The contractor is responsible for providing soil penetration testing data (SPT) to the pole manufacturer so site specific foundations can be designed.

All metal poles and arms should be black in color as specified in the project special provisions.

NCDOT Wind Zone 5 (110 mph)

DOCUMENT NOT CONSIDERED FINAL UNLESS ALL SIGNATURES COMPLETED

Prepared for the Offices of:
Transportation Mobility and Safety Division
STATE OF NORTH CAROLINA DEPARTMENT OF TRANSPORTATION
Signal Design Section
750 N.Greenfield Pkwy,Garner,NC 27529

SCALE 0 N/A N/A

US 23 Bus. (Asheville Hwy)
at
SR 1432 (Skyland Drive) /
SR 1438 (Dillard Town Road)

Division 14 Jacksin County Sylva

PLAN DATE:	July 2025	REVIEWED BY:	ZM Esposito
PREPARED BY:	DJ White	REVIEWED BY:	BN Groome

REVISIONS	INIT.	DATE

SEAL
NORTH CAROLINA PROFESSIONAL SEAL 052936 ENGINEER BRITTANY N. GROOME

DATE

SIG. INVENTORY NO. 14-0727

03-JUL-2025 12:36
U:\Proj_Grp\Raleigh_RKA_Projects\2018 Projects\18042 R-5600 - Jackson County NC\TSMD\Signal Design\Metal Poles\140727_Sig_MP142_2020nmsd.dgn
DWhite AT RAL-DWHITE

Docusign Envelope ID: EDBF09DE-B24D-4F89-928A-48F3924CA521

PROJECT REFERENCE NO.	SHEET NO.
R-5600	Sig-47.0

PHASING DIAGRAM

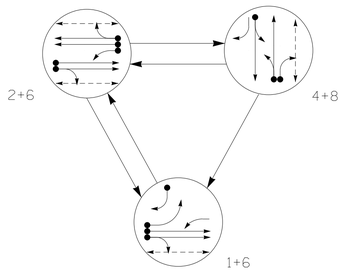

PHASING DIAGRAM DETECTION LEGEND

- DETECTED MOVEMENT
- UNDETECTED MOVEMENT (OVERLAP)
- UNSIGNALIZED MOVEMENT
- PEDESTRIAN MOVEMENT

TABLE OF OPERATION

SIGNAL FACE	PHASE 1+6	PHASE 2+6	PHASE 4+8	FLASH
11	←●	←R	←R	←R
21,24	←F Y	←F Y	←R	←R
22, 23, 25	R	G	R	R
41, 42, 44	R	R	G	R
43	←R	←R	←F Y	←R
61, 62, 63	G	G	R	R
81, 82, 84	R	R	G	R
83	←F Y	R	←F Y	R
P21, P22	DW	W	DW	DRK
P41, P42	DW	DW	W	DRK
P61, P62	W	W	DW	DRK

SIGNAL FACE I.D.

All Heads L.E.D.

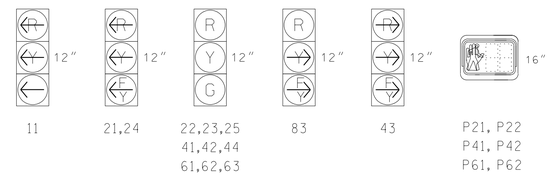

MAXTIME DETECTOR INSTALLATION CHART

DETECTOR					PROGRAMMING							
LOOP	SIZE (FT)	DISTANCE FROM STOPBAR (FT)	TURNS	NEW LOOP	CALL PHASE	DELAY TIME	EXTEND TIME	EXTEND	ADDED INITIAL	CALL	DELAY DURING GREEN	NEW CARD
1A	*	0	*	X	1	3.0	-	X	-	X	-	*
1B	*	0	*	-	1	-	-	X	-	X	-	*
2B	*	0	*	X	2	-	-	X	-	X	-	*
4A	*	+5	*	-	4	3.0	-	X	-	X	-	*
4B	*	+5	*	-	4	-	-	X	-	X	-	*
4C	*	+5	*	-	4	-	-	X	-	X	-	*
8A	*	0	*	-	8	3.0	-	X	-	X	-	*

* Multi-zone Microwave Detection Zone

3 Phase Fully Actuated (NC 107 D14-14)

NOTES

1. Refer to "Roadway Standard Drawings NCDOT" dated January 2024 and "Standard Specifications for Roads and Structures" dated January 2024.
2. Do not program signal for late night flashing operation unless otherwise directed by the Engineer.
3. Phase 1 mat be lagged.
4. Set all detector units to presence mode.
5. Omit "WALK" and flashing "DON'T WALK" with no pedestrian calls.
6. Program pedestrian heads to countdown the flashing "Don't Walk" time only.
7. This intersection uses multi-zone microwave detection. Install detectors according to the manufacturer's instructions to achieve the desired detection.
8. Maximum times shown in timing chart are for free-run operation only. Coordinated signal system timing values supersede these values.

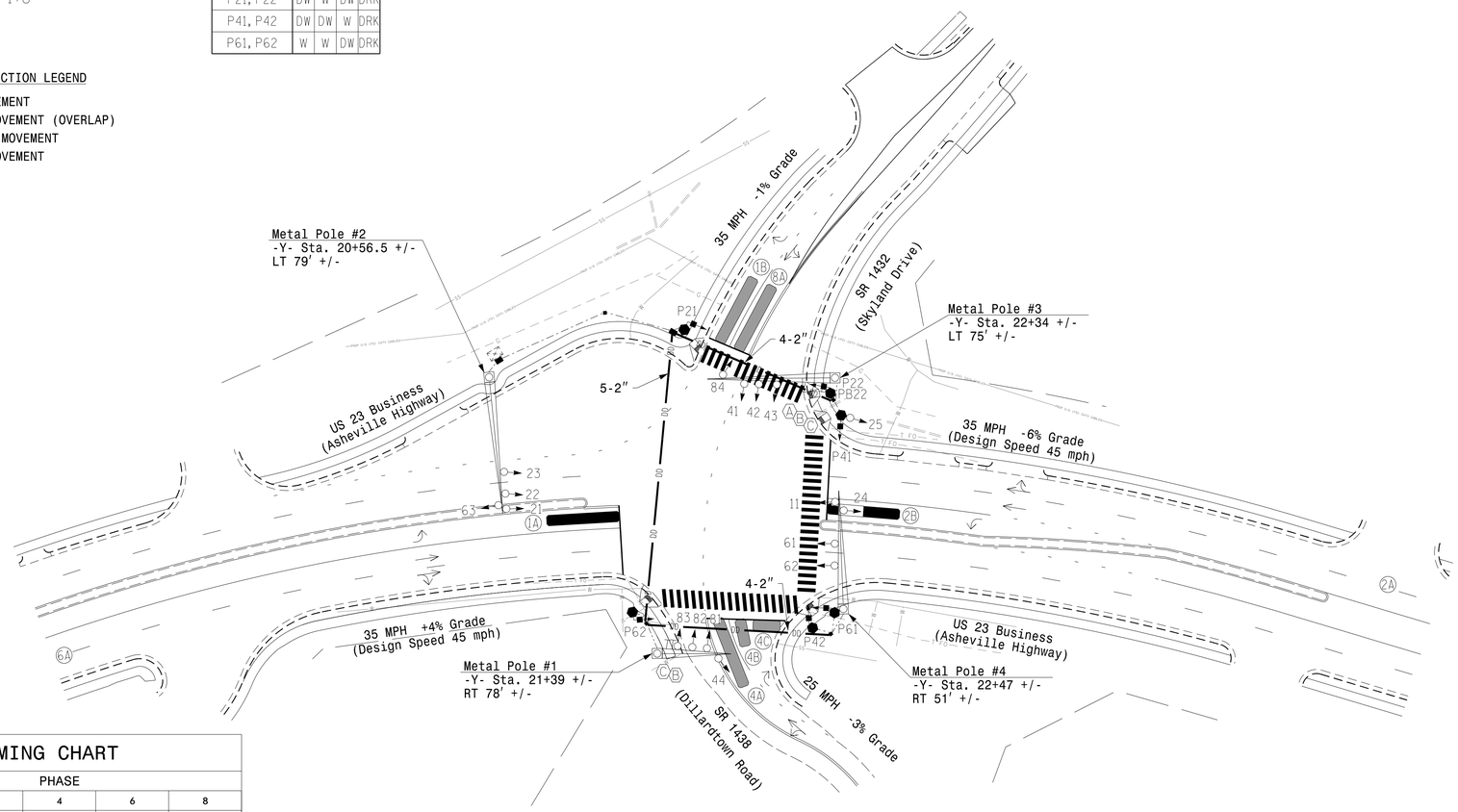

LEGEND

PROPOSED		EXISTING
	Traffic Signal Head	
	Modified Signal Head	N/A
	Sign	
	Pedestrian Signal Head With Push Button & Sign	
	Signal Pole with Guy	
	Signal Pole with Sidewalk Guy	
	Inductive Loop Detector	
	Controller & Cabinet	
	Junction Box	
	Oversized Junction Box	
	2-in Underground Conduit	
N/A	Right of Way	
	Directional Arrow	
DD	Directional Drill	N/A
	Non-Intrusive Detection Zone	
	Metal Pole with Mastarm	
	Type I Pushbutton Post	
	Type II Signal Pedestal	
N/A	Gas Line	G
N/A	U/G Sanitary Sewer	SS
N/A	U/G Water Line	W
N/A	Telephone Fiber	T FO
N/A	Drainage Pipe	
N/A	Underground CATV Fiber	CATV
A	"RIGHT TURN SIGNAL" Sign (R10-10R)	A
B	"NO TURN ON RED" Sign (R10-11a)	B
C	"RIGHT TURN YIELD TO U-TURN" Sign	C

MAXTIME TIMING CHART

FEATURE	PHASE 1	PHASE 2	PHASE 4	PHASE 6	PHASE 8
Walk *	–	14	14	14	–
Ped Clear *	–	15	26	22	–
Min Green	7	12	7	12	7
Passage *	2.0	2.0	2.0	2.0	2.0
Max 1 *	25	40	40	40	25
Yellow Change	3.0	5.1	3.9	5.1	3.9
Red Clear	3.3	2.0	3.4	2.0	3.4
Red Revert	2.0	2.0	2.0	2.0	2.0
Added Initial *	–	–	–	–	–
Maximum Initial *	–	–	–	–	–
Time Before Reduction *	–	–	–	–	–
Time To Reduce *	–	–	–	–	–
Minimum Gap	–	–	–	–	–
Advance Walk	–	7	7	7	–
Non Lock Detector	X	–	X	–	X
Vehicle Recall	–	MIN RECALL	–	MIN RECALL	–
Dual Entry	–	–	X	–	X

* These values may be field adjusted. Do not adjust Min Green and Extension times for phases 2 and 6 lower than what is shown. Min Green for all other phases should not be lower than 4 seconds.

Microwave Detection

	2A		6A	
FUNCTION	Sensor 1		Sensor 2	
Channel	1		1	
Phase	2		6	
Direction of Travel	WB		EB	
Type	Priority		Priority	
Level	2	QUEUE	2	QUEUE
Detection Zone (ft)	<750	–	<750	–
Range (ft)	600–100	150–100	600–100	150–100
Enable Speed	Y	Y	Y	Y
Speed Range (mph)	35–100	1–35	35–100	1–35
Enable Estimated Time of Arrival	Y	N	Y	N
Estimated Time of Arrival (sec)	2.5–6.5	–	2.5–6.5	–

Plans Prepared By:

DRMP

DRMP, INC.
8210 UNIVERSITY EXECUTIVE PARK DR.
SUITE 220
CHARLOTTE, NC 28262
NC LICENSE NO. F-1524 (704) 549-4260

Signal Upgrade - Final Design

Prepared for: Transportation Mobility and Safety Division, Signal Design Section, Department of Transportation, State of North Carolina, 750 N.Greenfield Pkwy,Garner,NC 27529

US 23 Bus. (Asheville Hwy) at SR 1432 (Skyland Drive) / SR 1438 (Dillardtown Road)

Division 14 Jackson County Sylva

PLAN DATE:	August 2025	REVIEWED BY:	ZM Esposito
PREPARED BY:	DJ White	REVIEWED BY:	BN Groome

SCALE 0 40 1"=40'

REVISIONS	INIT.	DATE

DOCUMENT NOT CONSIDERED FINAL UNLESS ALL SIGNATURES COMPLETED

SEAL

NORTH CAROLINA PROFESSIONAL SEAL 052936 ENGINEER BRITTANY N GROOME

Signed by: Brittany Groome 8/26/2025
-TENNESSEE/DOMESTIC-
DATE

SIG. INVENTORY NO. 14-0727

22-AUG-2025 10:35
bgroome@drmp.com
Fernando.Vazquez AT CHA-FVAZQUEZ
NCDOT File Structure/Traffic/Signals/Design/Signal Design/14-0727/14D727_sig_dsn_2022mmdd.dgn
NCDOT_Western_Div_On-Call_MC/NCDOT_6170_R5600_NC170_US23BUS/6.0_CAD_BIM/6.2_Work_In_Progress/R-5600 NCDOT_6170_R5600_US_East_01/Documents/NCDOT/NCDOT_Western_Div_On-Call_MC/NCDOT_6170_R5600_NC170_US23BUS/6.0_CAD_BIM/6.2_Work_In_Progress/R-5600 NCDOT

Docusign Envelope ID: EDBF09DE-B24D-4F89-928A-48F3924CA521

PROJECT REFERENCE NO.	SHEET NO.
R-5600	Sig.47.1

18 CHANNEL IP CONFLICT MONITOR PROGRAMMING DETAIL

(remove jumpers and set switches as shown)

REMOVE DIODE JUMPERS 1-6, 1-10, 1-11, 1-15, 2-6, 2-11, 2-13, 2-15, 4-8, 4-10, 4-12, 4-14, 6-10, 6-11, 6-13, 6-15, 8-10, 8-12, 8-14, 10-11, 10-12, 10-14, 10-15, 11-13, 11-15, 12-14 and 13-15.

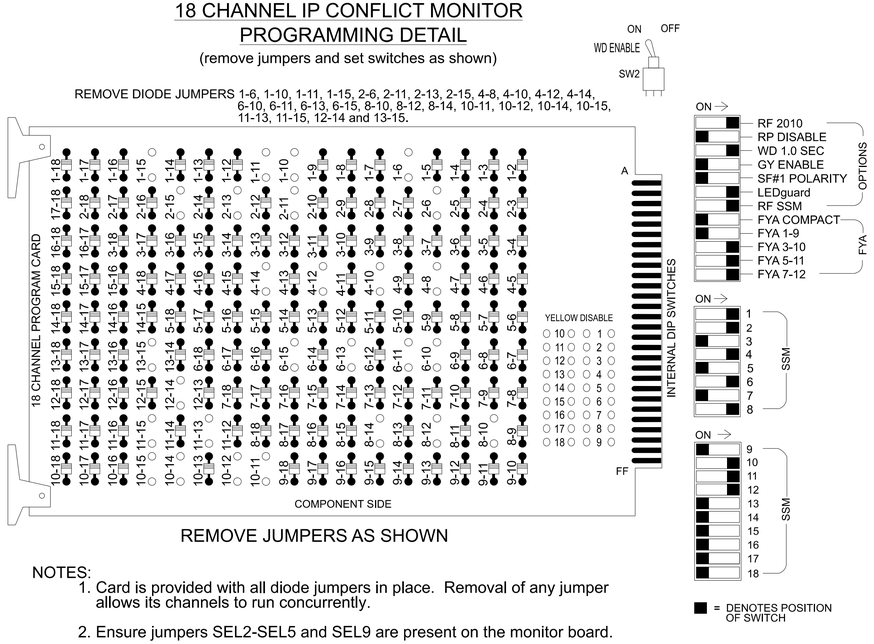

REMOVE JUMPERS AS SHOWN

NOTES:

1. Card is provided with all diode jumpers in place. Removal of any jumper allows its channels to run concurrently.
2. Ensure jumpers SEL2-SEL5 and SEL9 are present on the monitor board.
3. Ensure that the Red Enable is active at all times during normal operation.
4. Integrate monitor with Ethernet network in cabinet.

NOTES

1. To prevent "flash-conflict" problems, insert red flash program blocks for all vehicle load switches in the output file. The installer shall verify that signal heads flash in accordance with the signal plan.
2. Program phases 4 and 8 for Dual Entry and Simultaneous Start.
3. Program controller to start up in phase 2 Green No Walk and 6 Green No Walk.
4. If this signal will be managed by an ATMS software, enable controller and detector logging for all detectors used at this location.
5. The cabinet and controller are part of the NC 107 - D14-14 Signal System.

EQUIPMENT INFORMATION

Controller.....2070LX
Cabinet.....332 w/ Aux
Software.....Q-Free MAXTIME
Cabinet Mount.....Base
Output File Positions.....18 With Aux. Output File
Load Switches Used.....S1, S2, S3, S5, S6, S8, S9, S11, AUX S2, AUX S4, AUX S5
Phases Used.....1, 2, 2PED, 4, 4PED, 6, 6PED, 8

Overlap "1".....NOT USED
Overlap "2".....*
Overlap "3".....*
Overlap "4".....*

*See overlap programming detail on sheet 2

SIGNAL HEAD HOOK-UP CHART

LOAD SWITCH NO.	S1	S2	S3	S4	S5	S6	S7	S8	S9	S10	S11	S12	AUX S1	AUX S2	AUX S3	AUX S4	AUX S5	AUX S6
CMU CHANNEL NO.	1	2	13	3	4	14	5	6	15	7	8	16	9	10	17	11	12	18
PHASE	1	2	2 PED	3	4	4 PED	5	6	6 PED	7	8	8 PED	OL1	OL2	SPARE	OL3	OL4	SPARE
SIGNAL HEAD NO.	11	22,23, 25	P21, P22	NC	41,42, 44	P41, P42	NU	61,62, 63	P61, P62	NU	81,82, 84	NU	NU	83★	NU	21,24★	43★	NU
RED		128			101			134			107			A124				
YELLOW		129			102			135			108							
GREEN		130			103			136			109							
RED ARROW	125															A114	A101	
YELLOW ARROW	126													A125		A115	A102	
FLASHING YELLOW ARROW														A126		A116	A103	
GREEN ARROW	127																	
✋			113			104			119									
🚶			115			106			121									

NU = Not Used NC = Not Connected

★ Denotes install load resistor. See load resistor installation detail this sheet.

★ See pictorial of head wiring in detail this sheet.

FYA SIGNAL WIRING DETAIL

(wire signal heads as shown)

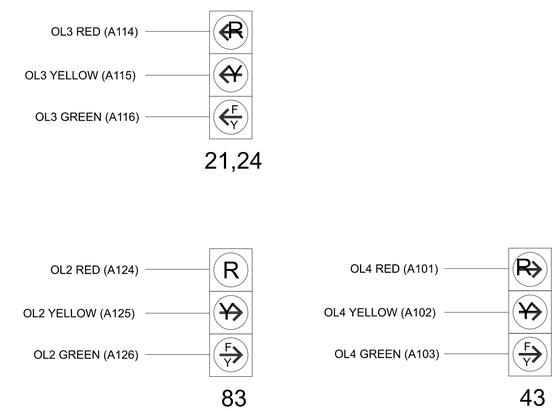

INPUT FILE POSITION LAYOUT

(front view)

		1	2	3	4	5	6	7	8	9	1O	11	12	13	14
FILE "I"	U	SLOT EMPTY	SLOT EMPTY	SLOT EMPTY	SLOT EMPTY	SLOT EMPTY	SLOT EMPTY	SLOT EMPTY	SLOT EMPTY	SLOT EMPTY	SLOT EMPTY	SLOT EMPTY	∅ 2 PED DC ISOLATOR	∅ 6 PED DC ISOLATOR	FS DC ISOLATOR
	L												∅ 4 PED DC ISOLATOR	NOT USED	ST DC ISOLATOR
FILE "J"	U	SLOT EMPTY	SLOT EMPTY	SLOT EMPTY	SLOT EMPTY	SLOT EMPTY	SLOT EMPTY	SLOT EMPTY	SLOT EMPTY	SLOT EMPTY	SLOT EMPTY	SLOT EMPTY	SLOT EMPTY	SLOT EMPTY	SLOT EMPTY
	L														

EX. : 1A, 2A, ETC. = LOOP NO.'S

FS = FLASH SENSE
ST = STOP TIME

INPUT FILE CONNECTION & PROGRAMMING CHART

LOOP NO.	LOOP TERMINAL	INPUT FILE POS.	PIN NO.	INPUT POINT	DETECTOR NO.	CALL PHASE	DELAY TIME	EXTEND TIME	EXTEND	ADDED INITIAL	CALL	DELAY DURING GREEN
PED PUSH BUTTONS												
P21,P22	TB8-4,6	I12U	67	33	2	PED 2						
P41,P42	TB8-5,6	I12L	69	35	4	PED 4						
P61,P62	TB8-7,9	I13U	68	34	6	PED 6						

NOTE:
INSTALL DC ISOLATORS IN INPUT FILE SLOTS I12 AND I13.

INPUT FILE POSITION LEGEND: J2L
FILE J
SLOT 2
LOWER

FLASHER CIRCUIT MODIFICATION DETAIL

IN ORDER TO INSURE THAT SIGNALS FLASH CONCURRENTLY ON THE SAME APPROACH, MAKE THE FOLLOWING FLASHER CIRCUIT CHANGES:

1. ON REAR OF PDA - REMOVE WIRE FROM TERM. T2-4 AND TERMINATE ON T2-2.
2. ON REAR OF PDA - REMOVE WIRE FROM TERM. T2-5 AND TERMINATE ON T2-3.
3. REMOVE FLASHER UNIT 2.

THE CHANGES LISTED ABOVE TIES ALL PHASES AND OVERLAPS TO FLASHER UNIT 1.

SPECIAL DETECTOR NOTE

Install a multi-zone microwave detection system for vehicle detection. Perform installation according to manufacturer's directions and NCDOT engineer -approved mounting locations to accomplish the detection schemes shown on the Signal Design Plans.

COUNTDOWN PEDESTRIAN SIGNAL OPERATION

Countdown Ped Signals are required to display timing only during Ped Clearance Interval. Consult Ped Signal Module user's manual for instructions on selecting this feature.

THIS ELECTRICAL DETAIL IS FOR
THE SIGNAL DESIGN: 14-0727
DESIGNED: Aug 2025
SEALED: 8/26/2025
REVISED: N/A

Electrical Detail - Sheet 1 of 2
Final Design

DOCUMENT NOT CONSIDERED FINAL UNLESS ALL SIGNATURES COMPLETED

Plans Prepared By:
DRMP
DRMP, INC.
8210 UNIVERSITY EXECUTIVE PARK DR.
SUITE 220
CHARLOTTE, NC 28262
NC LICENSE NO. F-1524 (704) 549-4260

Electrical and Programming Details For:

Transportation Mobility and Safety Division
Traffic Engineering & Signals Management Section
750 N. Greenfield Pkwy, Garner, NC 27529

US 23 Bus. (Asheville Hwy)
at
SR 1432 (Skyland Drive) /
SR 1438 (Dillardtown Road)

Division 14 Jackson County Sylva

PLAN DATE:	August 2025	REVIEWED BY:	ZM Esposito
PREPARED BY:	DJ White	REVIEWED BY:	BN Groome

REVISIONS	INIT.	DATE

SEAL
NORTH CAROLINA PROFESSIONAL SEAL 052936 ENGINEER BRITTANY N. GROOME

Signed by: Brittany Groome 8/26/2025
1E0934DE1094484...
DATE

SIG. INVENTORY NO. 14-0727

22-AUG-2025 10:35
wsdot\Documents\NCDOT\NCDOT_Western_Div_On-Call_M_/NCDOT_6170_R5600_NCTIO_US23BUS/6.0_CAD_BIM/6.2_Work_In_Progress/R-5600 NCDOT File Structure/Traffic/Signals/Design/Signal Management/14-0727/140727_sm.ele.2024mmdd.dgn
Fernando.Vazquez
AT CH4-FYA20UEZ

Docusign Envelope ID: EDBF09DE-B24D-4F89-928A-48F3924CA521

PROJECT REFERENCE NO.	SHEET NO.
R-5600	Sig.47.2

OUTPUT CHANNEL CONFIGURATION

Front Panel
Main Menu >Controller >More>Channels>Channels Config

Web Interface
Home >Controller >Advanced IO>Channels>Channel Configuration

Channel Configuration

Channel	Control Type	Control Source	Flash Yellow	Flash Red	Flash Alt	MMU Channel
1	Phase Vehicle	1		X	X	1
2	Phase Vehicle	2		X		2
3	Phase Vehicle	3		X	X	3
4	Phase Vehicle	4		X		4
5	Phase Vehicle	5		X		5
6	Phase Vehicle	6		X	X	6
7	Phase Vehicle	7		X		7
8	Phase Vehicle	8		X	X	8
9	Overlap	1		X	X	9
10	Overlap	2		X	X	10
11	Overlap	3		X		11
12	Overlap	4		X		12
13	Phase Ped	2				13
14	Phase Ped	4				14
15	Phase Ped	6				15
16	Phase Ped	8				16
17	Overlap	5		X	X	17
18	Overlap	6		X		18

NOTICE FLASH RED

MAXTIME STARTUP AND SOFTWARE FLASH PROGRAMMING DETAIL

Front Panel
Main Menu >Controller >Unit

Web Interface
Home >Controller >Unit

Modify parameters as shown below and save changes.

Start Up Parameters

StartUp Clearance Hold
6

Unit Flash Parameters

All Red Flash Exit Time
6

OVERLAP PROGRAMMING

Front Panel
Main Menu >Controller >Overlap >Overlap Parameters/Overlap Timings

Web Interface
Home >Controller >Overlap Configuration >Overlaps

Overlap Plan 1

Overlap	2	3	4
Type	FYA 4 - Section	FYA 4 - Section	FYA 4 - Section
Included Phases	1,8	6	4
Modifier Phases	-	-	-
Modifier Overlaps	-	-	-
Trail Green	0	0	0
Trail Yellow	0.0	0.0	0.0
Trail Red	0.0	0.0	0.0

THIS ELECTRICAL DETAIL IS FOR
THE SIGNAL DESIGN: 14-0727
DESIGNED: Aug 2025
SEALED: 8/26/2025
REVISED: N/A

Electrical Detail - Sheet 2 of 2
Final Design

DOCUMENT NOT CONSIDERED FINAL UNLESS ALL SIGNATURES COMPLETED

Plans Prepared By:

DRMP
DRMP, INC.
8210 UNIVERSITY EXECUTIVE PARK DR.
SUITE 220
CHARLOTTE, NC 28262
NC LICENSE NO. F-1524 (704) 549-4260

Electrical and Programming Details For:

Transportation Mobility and Safety Division
STATE OF NORTH CAROLINA DEPARTMENT OF TRANSPORTATION
Traffic Engineering & Signals Management Section
750 N. Greenfield Pkwy, Garner, NC 27529

US 23 Bus. (Asheville Hwy)
at
SR 1432 (Skyland Drive) /
SR 1438 (Dillardtown Road)

Division 14 Jackson County Sylva

PLAN DATE:	August 2025	REVIEWED BY:	ZM Esposito
PREPARED BY:	DJ White	REVIEWED BY:	BN Groome

REVISIONS	INIT.	DATE

SEAL

NORTH CAROLINA PROFESSIONAL SEAL 052936 ENGINEER BRITTANY N. GROOME

Signed by: Brittany Groome 8/26/2025
1E09342E1094484...
DATE

SIG. INVENTORY NO. 14-0727

22-AUG-2025 10:35
pw:\\pwdesd01.bentley.com:PWDESD01\Projects\R-5600 NCDOT File Structure\Traffic\Signals\Design\Signal Management\14-0727\140727_sm_ele_2024mmdd.dgn
pw:\\pw\Documents\NCDOT\NCDOT_Western_Div_On-Call_MC\NCDOT_6170_R5600_NC170_US23BUS\6.0_CAD_BIM\6.2_Work_In_Progress\R-5600 NCDOT File Structure\Traffic\Signals\Design\Signal Management\14-0727\140727_sm_ele_2024mmdd.dgn
Fernando.Vazquez AT CHA+FVAZQUEZ

Docusign Envelope ID: 5D641CD8-9BC9-4F24-8823-B14E4F7C5F77

METAL POLE No. 1 and 2

PROJECT REFERENCE NO.	SHEET NO.
R-5600	Sig-47.3

Design Loading for METAL POLE NO. 1

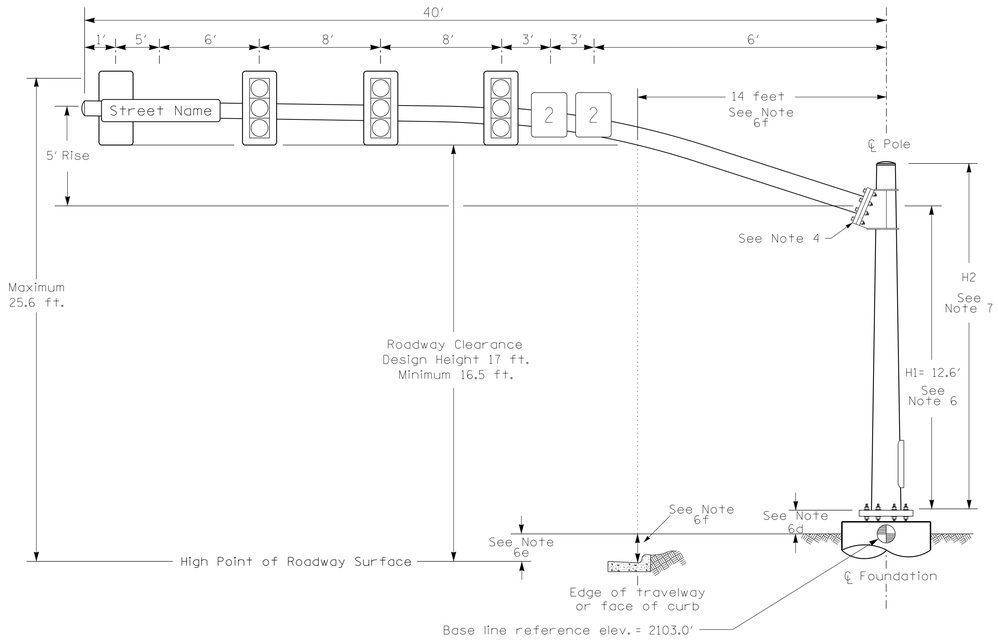

Elevation View

Design Loading for METAL POLE NO. 2

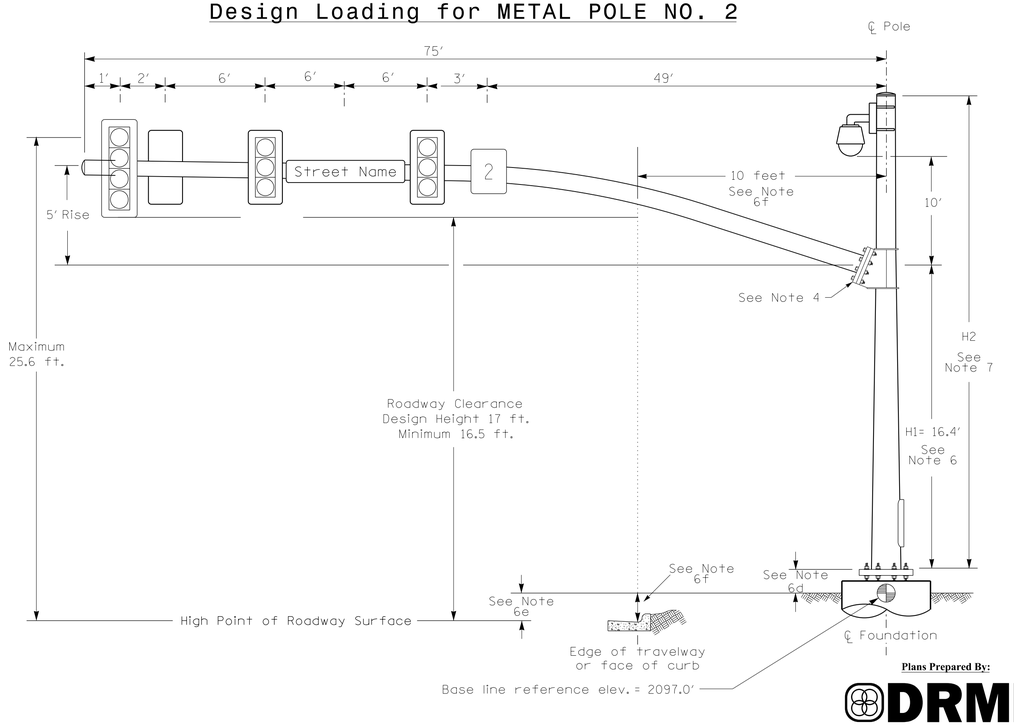

Elevation View

Plans Prepared By:

DRMP

DRMP, INC.
8210 UNIVERSITY EXECUTIVE PARK DR.
SUITE 220
CHARLOTTE, NC 28262
NC LICENSE NO. F-1524 (704) 549-4260

SPECIAL NOTE

The contractor is responsible for verifying that the mast arm attachment height (H1) will provide the "Design Height" clearance from the roadway before submitting final shop drawings for approval. Verify elevation data below which was obtained by field measurement or from available project survey data.

Elevation Data for Mast Arm Attachment (H1)

Elevation Differences for:	Pole 1	Pole 2
Baseline reference point at ℄ Foundation @ ground level	2103.0 ft.	2097.0 ft.
Elevation difference at High point of roadway surface	-0.9 ft.	+2.9 ft.
Elevation difference at Edge of travelway or face of curb	-2.0 ft.	+2.3 ft.

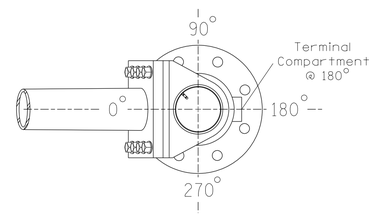

POLE RADIAL ORIENTATION

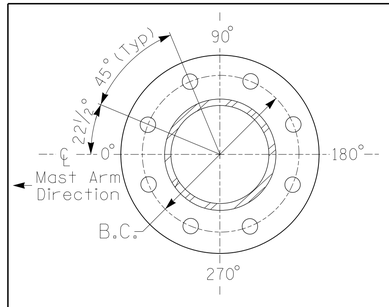

8 BOLT BASE PLATE DETAIL

See Note 5

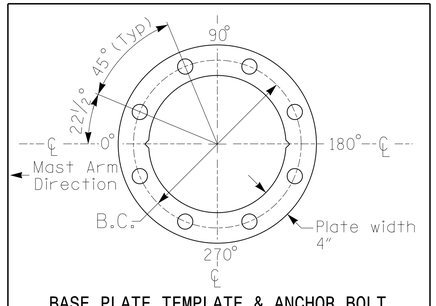

BASE PLATE TEMPLATE & ANCHOR BOLT LOCK PLATE DETAIL

For 8 Bolt Base Plate

MAST ARM LOADING SCHEDULE

LOADING SYMBOL	DESCRIPTION	AREA	SIZE	WEIGHT
	RIGID MOUNTED SIGNAL HEAD 12"-4 SECTION-WITH BACKPLATE	11.5 S.F.	25.5" W X 66.0" L	74 LBS
	RIGID MOUNTED SIGNAL HEAD 12"-3 SECTION-WITH BACKPLATE	9.3 S.F.	25.5" W X 52.5" L	60 LBS
2	SIGN RIGID MOUNTED	7.5 S.F.	30.0" W X 36.0" L	14 LBS
Street Name	STREET NAME SIGN RIGID MOUNTED	16.0 S.F.	24.0" W X 96.0" L	36 LBS
	CCTV CAMERA POLE-MOUNTED	1.0 S.F.	11.0" W X 11.0" L	30 LBS

NOTES

DESIGN REFERENCE MATERIAL

1. Design the traffic signal structure and foundation in accordance with:
   - The 1st Edition 2015 AASHTO LRFD "Standard Specifications for Structural Supports for Highway Signs, Luminaires, and Traffic Signals, including all of the latest interim revisions.
   - The 2024 NCDOT "Standard Specifications for Roads and Structures." The latest addenda to the specifications can be found in the traffic signal project special provisions.
   - The 2024 NCDOT Roadway Standard Drawings.
   - The traffic signal project plans and special provisions.
   - The NCDOT "Metal Pole Standards" located at the following NCDOT website: https://connect.ncdot.gov/resources/safety/Pages/ITS-Design-Resources.aspx

DESIGN REQUIREMENTS

2. Design the traffic signal structure using the loading conditions shown in the elevation views. These are anticipated worst case "design loads" and may not represent the actual loads that will be applied at the time of the installation. The contractor should refer to the traffic signal plans for the actual loads that will be applied at the time of the installation.
3. Design all signal supports using force ratios that do not exceed 0.9.
4. A clamp-type bolted mast arm-to-pole connection may be used instead of the welded ring stiffened box connection shown as long as the connection meets all of the design requirements.
5. Design base plate with 8 anchor bolt holes. Provide 2 inch x 60 inch anchor bolts.
6. The mast arm attachment height (H1) shown is based on the following design assumptions:
   a. Nominal vertical rise in mast arm is 5 feet as measured from the centerline of the arm base to the centerline of the free end of the arm.
   b. Signal heads are rigidly mounted and vertically centered on the mast arm.
   c. The roadway clearance height for design is as shown in the elevation views.
   d. The top of the pole base plate is 0.75 feet above the ground elevation.
   e. Refer to the Elevation Data Chart for the elevation differences between the proposed foundation ground level and the high point of the roadway.
   f. Provide horizontal distance from the proposed centerline of the foundation to the edge of travelway. Refer to the Elevation Data Chart for elevation difference between the proposed foundation ground level and the edge of travelway. This information is necessary to ensure that the roadway clearance is maintained at the edge of the travelway and to aid in the camber design of the arm.
7. The pole manufacturer will determine the total height (H2) of each pole using the greater of the following:
   - Mast arm attachment height (H1) plus 2 feet, or
   - H1 plus 1/2 of the total height of the mast arm attachment assembly plus 1 foot, or
   - From top of CCTV Camera assembly plus 2 feet.
8. If pole location adjustments are required, the contractor must gain approval from the Engineer as this may affect the mast arm lengths and arm attachment heights. The contractor may contact the Signal Design Section Senior Structural Engineer for assistance at (919) 814-5000.
9. The contractor is responsible for verifying that the mast arm length shown will allow proper positioning of the signal heads over the roadway.
10. The contractor is responsible for providing soil penetration testing data (SPT) to the pole manufacturer so site specific foundations can be designed.

All metal poles and arms should be black in color as specified in the project special provisions.

NCDOT Wind Zone 5 (110 mph)

DOCUMENT NOT CONSIDERED FINAL UNLESS ALL SIGNATURES COMPLETED

Prepared for the Offices of:
Transportation Mobility and Safety Division
STATE OF NORTH CAROLINA DEPARTMENT OF TRANSPORTATION
Signal Design Section
750 N.Greenfield Pkwy,Garner,NC 27529

US 23 Bus. (Asheville Hwy)
at
SR 1432 (Skyland Drive) /
SR 1438 (Dillard Town Road)

Division 14 Jacksin County Sylva

PLAN DATE:	August 2025	REVIEWED BY:	ZM Esposito
PREPARED BY:	DJ White	REVIEWED BY:	BN Groome

SCALE: 0 N/A N/A

REVISIONS	INIT.	DATE

SEAL
NORTH CAROLINA PROFESSIONAL SEAL 052936 ENGINEER BRITTANY N GROOME

Signed by: Brittany Groome 1E09340E1094484... 8/26/2025
DATE

SIG. INVENTORY NO. 14-0727

26-AUG-2025 15:39
D:\HDU-SIGNAL\Sig_RKA_Projects\2018 Projects\18042 R-5600 - Jackson County NC\TSMD\Signal Design\Metal Poles\140727_sig_MP1&2_2020mmdd.dgn
Fernando.Vazquez AT CHA-FVAZQUEZ

Docusign Envelope ID: 5D641CD8-9BC9-4F24-8823-B14E4F7C5F77

METAL POLE No. 3 and 4

PROJECT REFERENCE NO.	SHEET NO.
R-5600	Sig-47.4

Design Loading for METAL POLE NO. 3

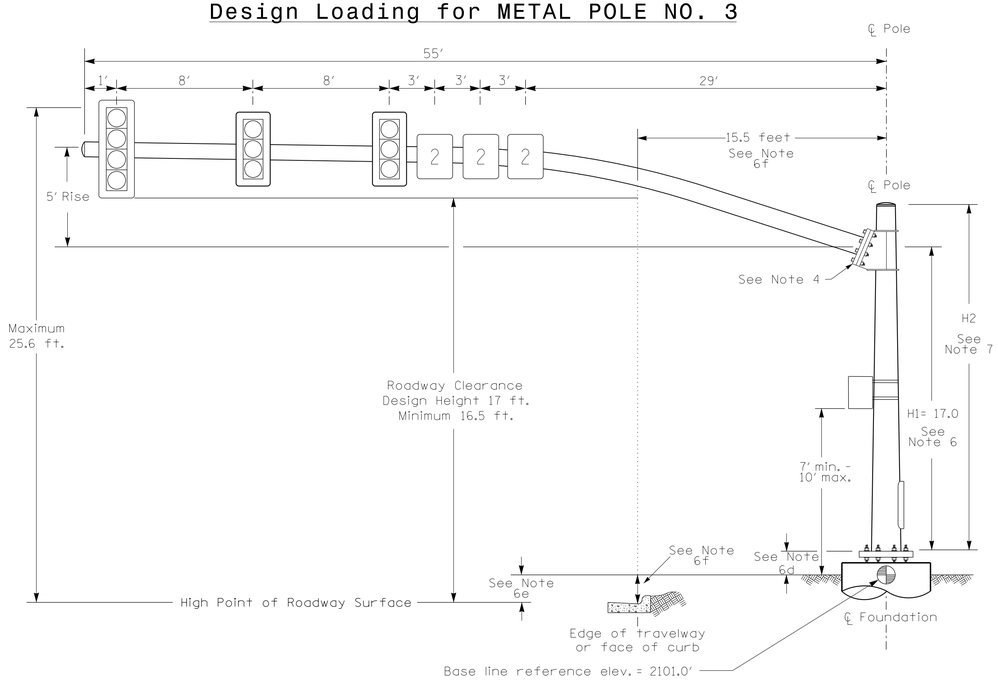

Elevation View

Design Loading for METAL POLE NO. 4

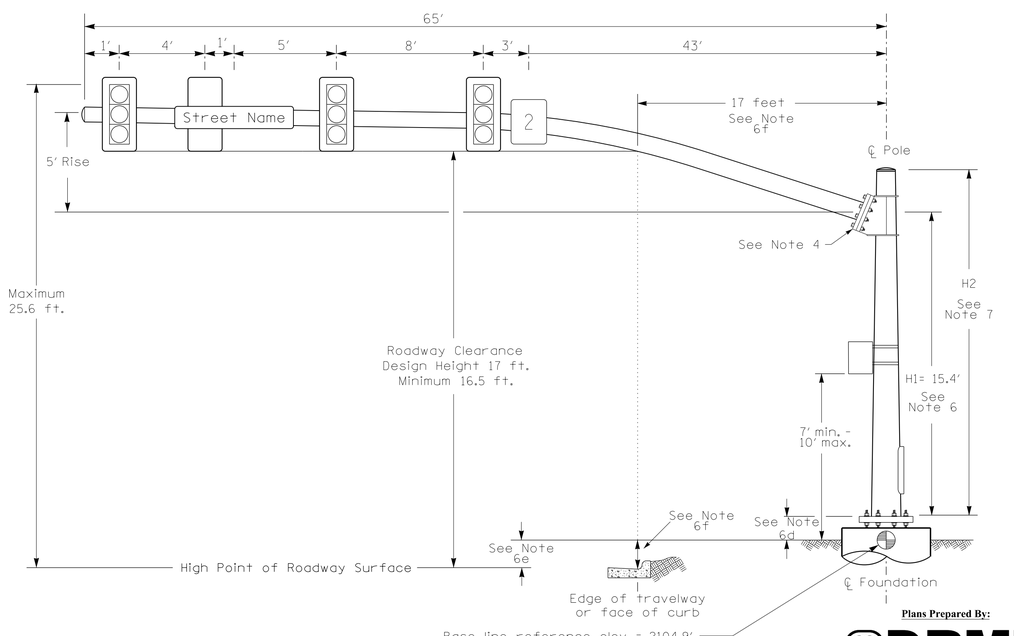

Elevation View

Plans Prepared By:

DRMP, INC.
8210 UNIVERSITY EXECUTIVE PARK DR.
SUITE 220
CHARLOTTE, NC 28262
NC LICENSE NO. F-1524 (704) 549-4260

SPECIAL NOTE

The contractor is responsible for verifying that the mast arm attachment height (H1) will provide the "Design Height" clearance from the roadway before submitting final shop drawings for approval. Verify elevation data below which was obtained by field measurement or from available project survey data.

Elevation Data for Mast Arm Attachment (H1)

Elevation Differences for:	Pole 3	Pole 4
Baseline reference point at ℄ Foundation @ ground level	2101.0 ft.	2104.9 ft.
Elevation difference at High point of roadway surface	+3.5 ft.	+1.9 ft.
Elevation difference at Edge of travelway or face of curb	+3.7 ft.	-0.5 ft.

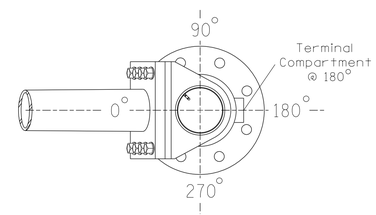

POLE RADIAL ORIENTATION

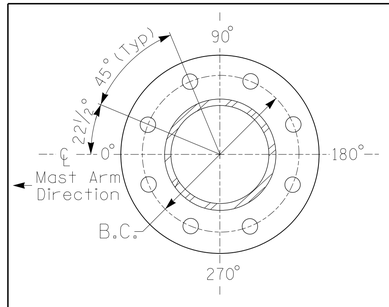

8 BOLT BASE PLATE DETAIL

See Note 5

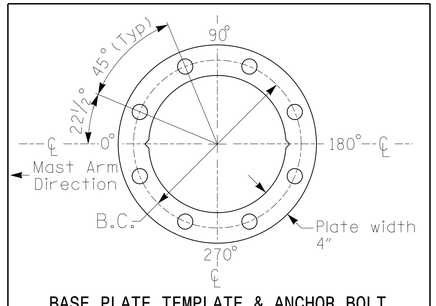

BASE PLATE TEMPLATE & ANCHOR BOLT LOCK PLATE DETAIL

For 8 Bolt Base Plate

MAST ARM LOADING SCHEDULE

LOADING SYMBOL	DESCRIPTION	AREA	SIZE	WEIGHT
	RIGID MOUNTED SIGNAL HEAD 12″-4 SECTION-WITH BACKPLATE	11.5 S.F.	25.5″W X 66.0″L	74 LBS
	RIGID MOUNTED SIGNAL HEAD 12″-3 SECTION-WITH BACKPLATE	9.3 S.F.	25.5″W X 52.5″L	60 LBS
2	SIGN RIGID MOUNTED	7.5 S.F.	30.0″W X 36.0″L	14 LBS
Street Name	STREET NAME SIGN RIGID MOUNTED	16.0 S.F.	24.0″W X 96.0″L	36 LBS

NOTES

DESIGN REFERENCE MATERIAL

1. Design the traffic signal structure and foundation in accordance with:
   - The 1st Edition 2015 AASHTO LRFD "Standard Specifications for Structural Supports for Highway Signs, Luminaires, and Traffic Signals, including all of the latest interim revisions.
   - The 2024 NCDOT "Standard Specifications for Roads and Structures." The latest addenda to the specifications can be found in the traffic signal project special provisions.
   - The 2024 NCDOT Roadway Standard Drawings.
   - The traffic signal project plans and special provisions.
   - The NCDOT "Metal Pole Standards" located at the following NCDOT website: https://connect.ncdot.gov/resources/safety/Pages/ITS-Design-Resources.aspx

DESIGN REQUIREMENTS

2. Design the traffic signal structure using the loading conditions shown in the elevation views. These are anticipated worst case "design loads" and may not represent the actual loads that will be applied at the time of the installation. The contractor should refer to the traffic signal plans for the actual loads that will be applied at the time of the installation.
3. Design all signal supports using force ratios that do not exceed 0.9.
4. A clamp-type bolted mast arm-to-pole connection may be used instead of the welded ring stiffened box connection shown as long as the connection meets all of the design requirements.
5. Design base plate with 8 anchor bolt holes. Provide 2 inch x 60 inch anchor bolts.
6. The mast arm attachment height (H1) shown is based on the following design assumptions:
   a. Nominal vertical rise in mast arm is 5 feet as measured from the centerline of the arm base to the centerline of the free end of the arm.
   b. Signal heads are rigidly mounted and vertically centered on the mast arm.
   c. The roadway clearance height for design is as shown in the elevation views.
   d. The top of the pole base plate is 0.75 feet above the ground elevation.
   e. Refer to the Elevation Data Chart for the elevation differences between the proposed foundation ground level and the high point of the roadway.
   f. Provide horizontal distance from the proposed centerline of the foundation to the edge of travelway. Refer to the Elevation Data Chart for elevation difference between the proposed foundation ground level and the edge of travelway. This information is necessary to ensure that the roadway clearance is maintained at the edge of the travelway and to aid in the camber design of the arm.
7. The pole manufacturer will determine the total height (H2) of each pole using the greater of the following:
   - Mast arm attachment height (H1) plus 2 feet, or
   - H1 plus 1/2 of the total height of the mast arm attachment assembly plus 1 foot.
8. If pole location adjustments are required, the contractor must gain approval from the Engineer as this may affect the mast arm lengths and arm attachment heights. The contractor may contact the Signal Design Section Senior Structural Engineer for assistance at (919) 814-5000.
9. The contractor is responsible for verifying that the mast arm length shown will allow proper positioning of the signal heads over the roadway.
10. The contractor is responsible for providing soil penetration testing data (SPT) to the pole manufacturer so site specific foundations can be designed.

All metal poles and arms should be black in color as specified in the project special provisions.

NCDOT Wind Zone 5 (110 mph)

DOCUMENT NOT CONSIDERED FINAL UNLESS ALL SIGNATURES COMPLETED

Prepared for the Offices of:
Transportation Mobility and Safety Division
STATE OF NORTH CAROLINA DEPARTMENT OF TRANSPORTATION
Signal Design Section
750 N.Greenfield Pkwy,Garner,NC 27529

US 23 Bus. (Asheville Hwy)
at
SR 1432 (Skyland Drive) /
SR 1438 (Dillard Town Road)

Division 14 Jacksin County Sylva

PLAN DATE:	August 2025	REVIEWED BY:	ZM Esposito
PREPARED BY:	DJ White	REVIEWED BY:	BN Groome

SCALE 0 N/A N/A

REVISIONS | INIT. | DATE

SEAL
NORTH CAROLINA PROFESSIONAL SEAL 052936 ENGINEER BRITTANY N. GROOME

Signed by: Brittany Groome 8/26/2025
1E0934DE1D9E4E4...
DATE

SIG. INVENTORY NO. 14-0727

25-AUG-2025 15:39
D:\Projects\Raleigh_RK&I_Projects\2018 Projects\18042 R-5600 - Jackson County NC\TSMO\Signal Design\Metal Poles\140727_Sig_MP142_2020nmsd.dgn
Fernando.Vazquez AT CHA-FVAZQUEZ

PROJECT I.D.NO.	SHEET NO.
	Sig.M1A

STATE OF NORTH CAROLINA
DIVISION OF HIGHWAYS

STANDARD DRAWINGS FOR ALL METAL POLES (LRFD)

POLE STANDARDS

NCDOT METAL POLE

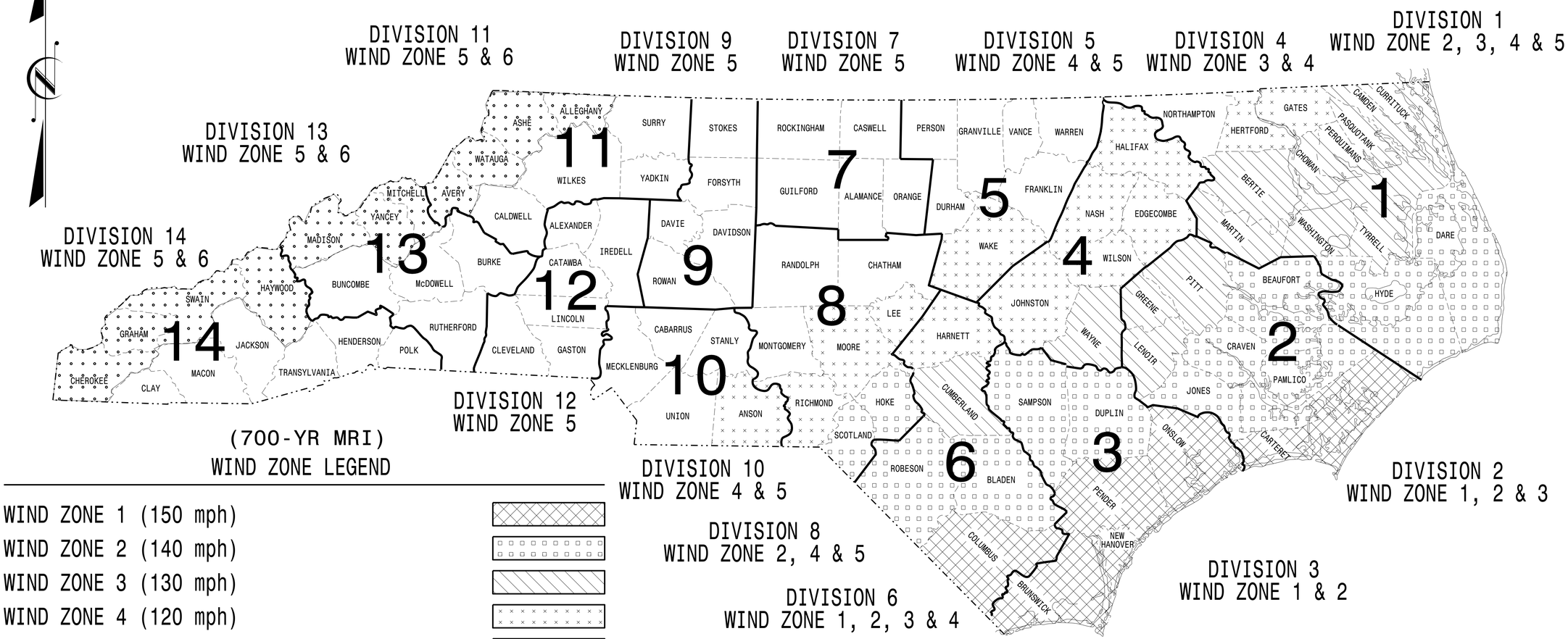

(700-YR MRI)
WIND ZONE LEGEND

WIND ZONE 1 (150 mph)
WIND ZONE 2 (140 mph)
WIND ZONE 3 (130 mph)
WIND ZONE 4 (120 mph)
WIND ZONE 5 (110 mph)
WIND ZONE 6 (135 mph) Special Wind Zone

https://connect.ncdot.gov/resources/safety/Pages/ITS-Design-Resources.aspx

Prepared in the Offices of:

Transportation Mobility and Safety Division
STATE OF NORTH CAROLINA DEPARTMENT OF TRANSPORTATION
Signal Design Section

750 N.Greenfield Pkwy.
Garner,NC 27529

Designed in conformance with the latest 2020 Interim to the 1st Edition 2015

AASHTO LRFD

Standard Specifications for Highway Signs, Luminaires, and Traffic Signals

INDEX OF PLANS

DRAWING NUMBER	DESCRIPTION
Sig. M 1A	Statewide Wind Zone Map (700–yr MRI)
Sig. M 1B	Statewide Wind Zone Map (10–yr MRI)
Sig. M 2	Typical Fabrication Details–All Metal Poles
Sig. M 3	Typical Fabrication Details–Strain Poles
Sig. M 4	Typical Fabrication Details–Mast Arm Poles
Sig. M 5	Typical Fabrication Details–Mast Arm Connection
Sig. M 6	Typical Fabrication Details–Strain Pole Attachments
Sig. M 7	Construction Details–Foundations
Sig. M 8	Standard Strain Pole Foundation–All Soil Conditions
Sig. M 9	Typical Fabrication Details–CCTV Camera Poles

MOBILITY AND SAFETY DIVISION – TRANSPORTATION SYSTEMS MANAGEMENT AND OPERATIONS UNIT

D.Y. ISHAK – STATE SIGNALS ENGINEER

K. DURIGON, P.E. – ITS AND SIGNALS STRUCTURAL ENGINEER

B. WALKER, P.E. – ITS AND SIGNALS STRUCTURAL ENGINEER

SEAL

NORTH CAROLINA PROFESSIONAL SEAL 036626 ENGINEER KEVIN C. DURIGON

DocuSigned by:
Kevin Durigon
SIGNATURE
4B23DC79B3784DA...
09/21/2023
DATE

03-OCT-2023 12:07
S:*ITSSUM*ITS Signals*Signal Design Sections*Structures*Drawings*2024 Metal Pole Std Drawings for LRFD*2024 Sig. M1A Standard All Metal Pole (700-yr MRI).dgn
kdurigon

NCDOT METAL POLE STANDARDS

PROJECT I.D.NO.	SHEET NO.
	Sig.M1B

STATE OF NORTH CAROLINA
DIVISION OF HIGHWAYS

STANDARD DRAWINGS FOR ALL METAL POLES (LRFD)

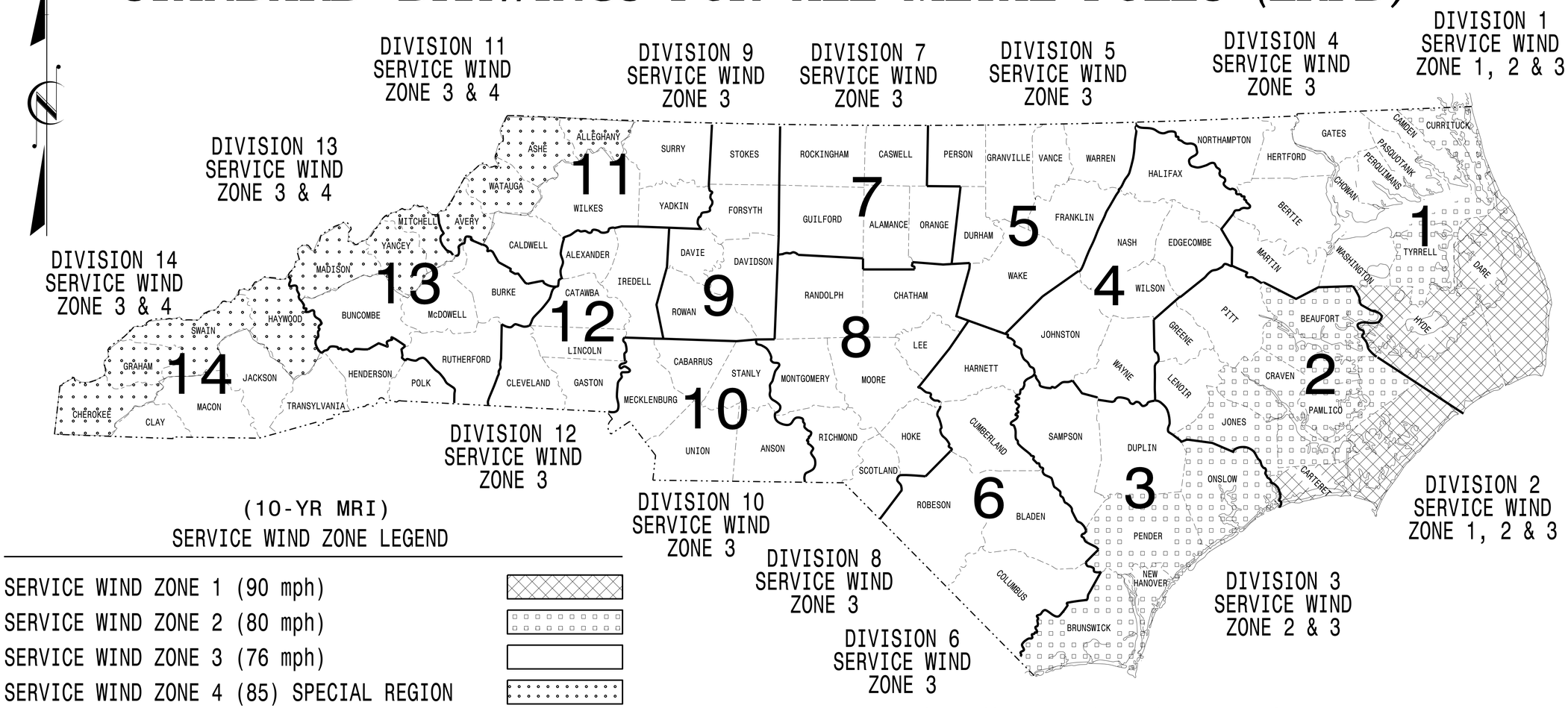

(10-YR MRI)
SERVICE WIND ZONE LEGEND

- SERVICE WIND ZONE 1 (90 mph)
- SERVICE WIND ZONE 2 (80 mph)
- SERVICE WIND ZONE 3 (76 mph)
- SERVICE WIND ZONE 4 (85) SPECIAL REGION

https://connect.ncdot.gov/resources/safety/Pages/ITS-Design-Resources.aspx

Prepared in the Offices of:

Transportation Mobility and Safety Division
Signal Design Section
750 N.Greenfield Pkwy,
Garner,NC 27529

Designed in conformance with the latest 2020 Interim to the 1st Edition 2015

AASHTO LRFD

Standard Specifications for Highway Signs, Luminaires, and Traffic Signals

INDEX OF PLANS

DRAWING NUMBER	DESCRIPTION
Sig. M 1A	Statewide Wind Zone Map (700–yr MRI)
Sig. M 1B	Statewide Wind Zone Map (10–yr MRI)
Sig. M 2	Typical Fabrication Details–All Metal Poles
Sig. M 3	Typical Fabrication Details–Strain Poles
Sig. M 4	Typical Fabrication Details–Mast Arm Poles
Sig. M 5	Typical Fabrication Details–Mast Arm Connection
Sig. M 6	Typical Fabrication Details–Strain Pole Attachments
Sig. M 7	Construction Details–Foundations
Sig. M 8	Standard Strain Pole Foundation–All Soil Conditions
Sig. M 9	Typical Fabrication Details–CCTV Camera Poles

NCDOT CONTACTS:

MOBILITY AND SAFETY DIVISION – TRANSPORTATION SYSTEMS MANAGEMENT AND OPERATIONS UNIT

D.Y. ISHAK – STATE SIGNALS ENGINEER

K. DURIGON, P.E. – ITS AND SIGNALS STRUCTURAL ENGINEER

B. WALKER, P.E. – ITS AND SIGNALS STRUCTURAL ENGINEER

SEAL

NORTH CAROLINA PROFESSIONAL SEAL 036626 ENGINEER KEVIN C. DURIGON

DocuSigned by:
Kevin Durigon
SIGNATURE
4B23DC79B3784DA...
09/21/2023
DATE

03-OCT-2023 12:21
S:\TSG\413 Signals\Design Section\Structures\Drawings\2024 Metal Pole Std Drawings for LRFD\2024 Sig. M1B Standard All Metal Pole (10-yr MRI).dgn
kcdurigon

PROJECT I.D. NO.	SHEET NO.
	Sig.M2

Fabrication Details – All Metal Poles

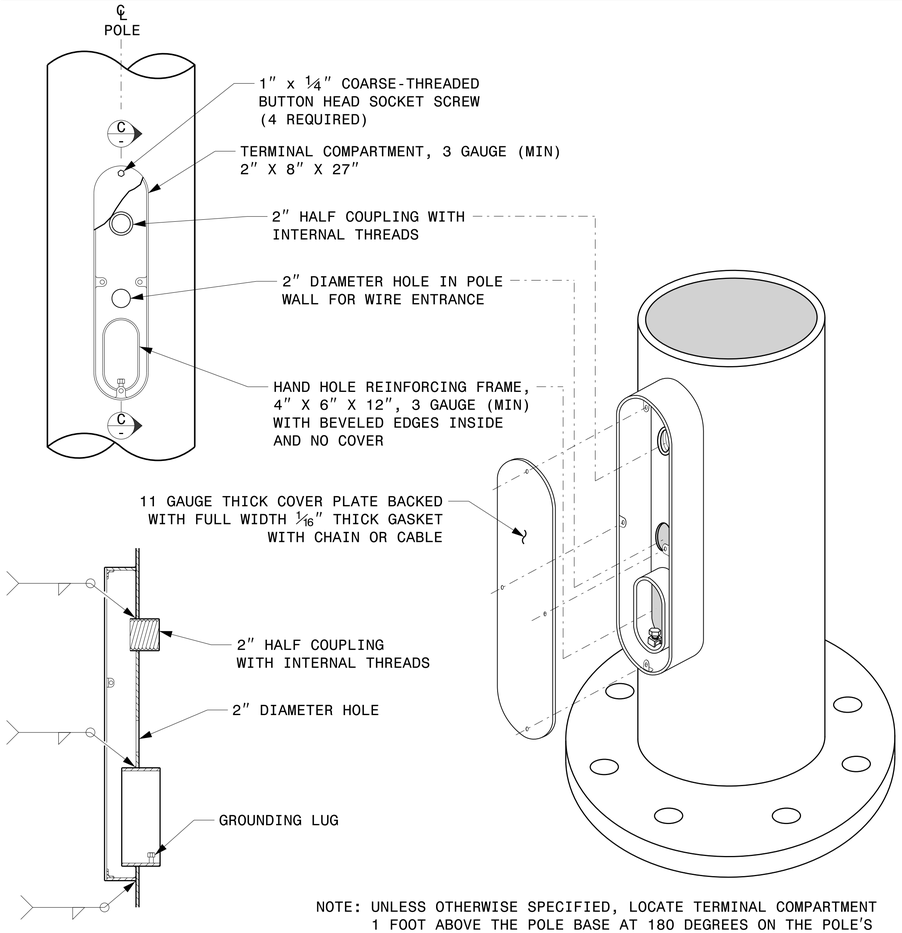

SECTION C-C

NOTE: UNLESS OTHERWISE SPECIFIED, LOCATE TERMINAL COMPARTMENT 1 FOOT ABOVE THE POLE BASE AT 180 DEGREES ON THE POLE'S RADIAL INDEX.

TERMINAL COMPARTMENT DETAIL

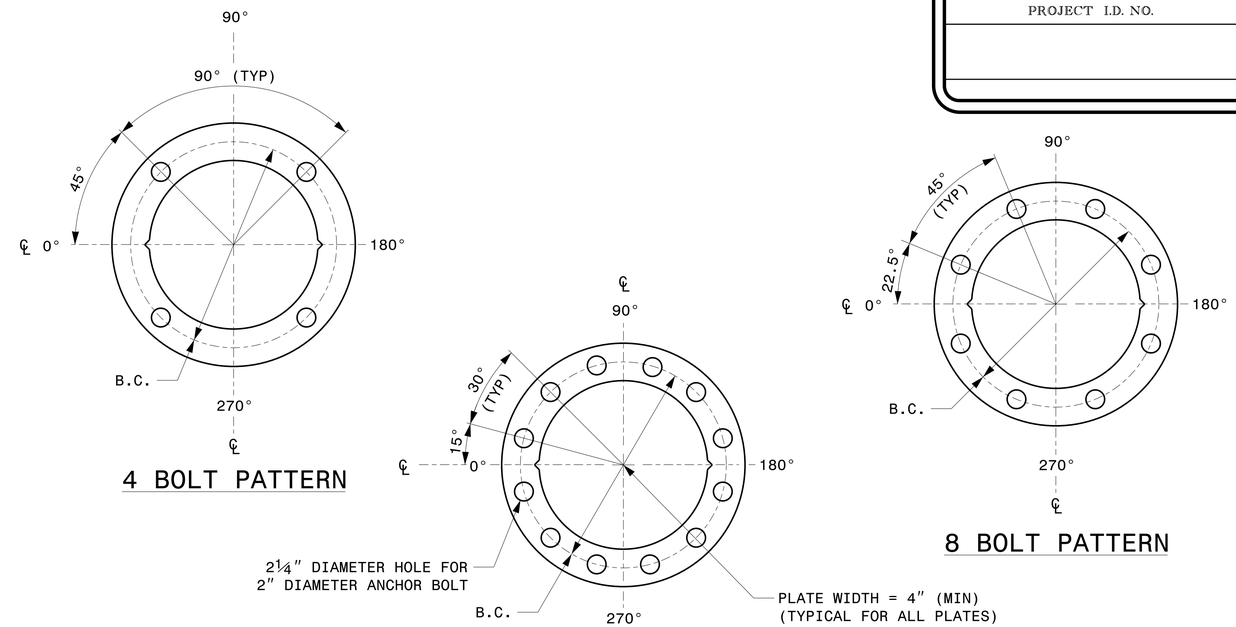

CONSTRUCT TEMPLATES AND PLATES FROM ¼″ (MIN) THICK STEEL. GALVANIZING IS NOT REQUIRED.

BASE PLATE TEMPLATE AND ANCHOR BOLT LOCK PLATE DETAILS

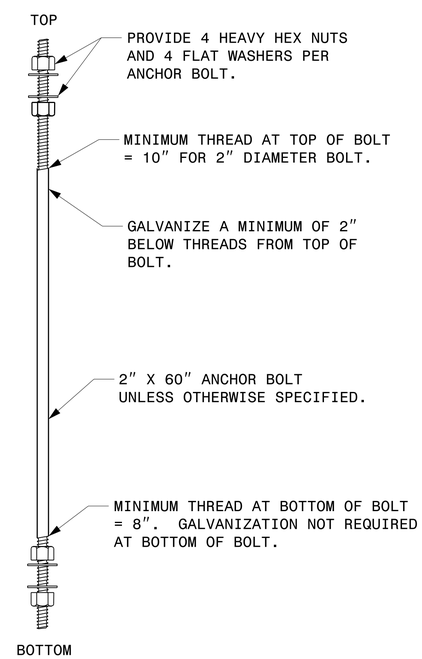

ANCHOR BOLT DETAIL

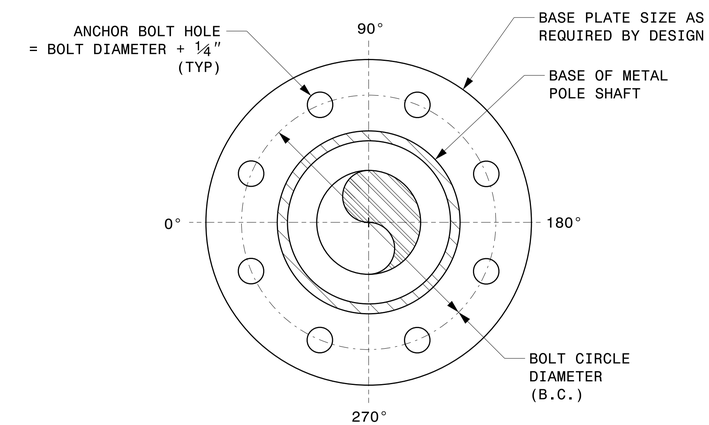

NOTE: BASE PLATE MAY BE CIRCULAR, OCTAGONAL, SQUARE OR RECTANGULAR IN SHAPE.

TYPICAL BASE PLATE DETAIL

MFG _____ MFG. DATE: MM/YY
SHAFT D/T/L/Y ----/----/----/----
ARM-A D/T/L/Y ----/----/----/----
----/----/----/----
ARM-B D/T/L/Y ----/----/----/----
----/----/----/----
A.B. DIA./B.C./L/Y ----/----/----/----
NCDOT SIG. INV. NO. _____
NCDOT POLE NO. _____

SHAFT I.D. TAG
(PROVIDE ON SHAFT OF STRAIN POLES AND MAST ARM POLE SHAFT)

MFG _____ MFG. DATE: MM/YY
SECTION D/T/L/Y ----/----/----/----
NCDOT SIG. INV. NO. _____
NCDOT POLE NO. _____

ARM I.D. TAG
(PROVIDE ON EACH SECTION OF A MULTI-SECTION MAST ARM)

NOTES:

1. D = DIAMETER, T = THICKNESS, L = LENGTH, Y = YIELD STRENGTH
2. A.B. = ANCHOR BOLT
3. B.C. = BOLT CIRCLE OF ANCHOR BOLTS
4. IF STANDARD DESIGN, INCLUDE CASE NUMBER IN ADDITION TO POLE NUMBER ON "NCDOT POLE NO." LINE.
5. SIGNAL INV. NUMBER AND POLE I.D. NUMBER. SEE DRAWING M3 AND M4 FOR MOUNTING POSITIONS OF I.D. TAGS.

IDENTIFICATION TAG DETAILS

Prepared in the Offices of:
Transportation Mobility and Safety Division
STATE OF NORTH CAROLINA DEPARTMENT OF TRANSPORTATION
Signal Design Section
750 N.Greenfield Pkwy,Garner,NC 27529

SCALE
0 NA
NONE

Typical Fabrication Details For All Metal Poles

PLAN DATE:	SEPTEMBER 2023	DESIGNED BY:	C.F.ANDREWS
PREPARED BY:	K.C. DURIGON	REVIEWED BY:	D.C. SARKAR

REVISIONS	INIT.	DATE

SEAL
NORTH CAROLINA PROFESSIONAL SEAL 036626 ENGINEER KEVIN C. DURIGON

DocuSigned by:
Kevin Durigon
SIGNATURE
4B23DC79B3784DA...
09/21/2023
DATE

03-OCT-2023 12:24
S:*MTS&SUM*TS Signals*Signal Design Section*Structures*Drawings*2024 Metal Pole Std Drawings for LRFD*2024 Sig-M2 Std. Fabrication Details-All Poles.dgn
kcdurigon

PROJECT I.D. NO.	SHEET NO.
	Sig.M3

NOTE:

1. OPENING IN POLE BASE PLATE SHALL BE EQUAL TO POLE BASE INSIDE DIAMETER MINUS 3½" BUT SHALL NOT BE LESS THAN 8½".

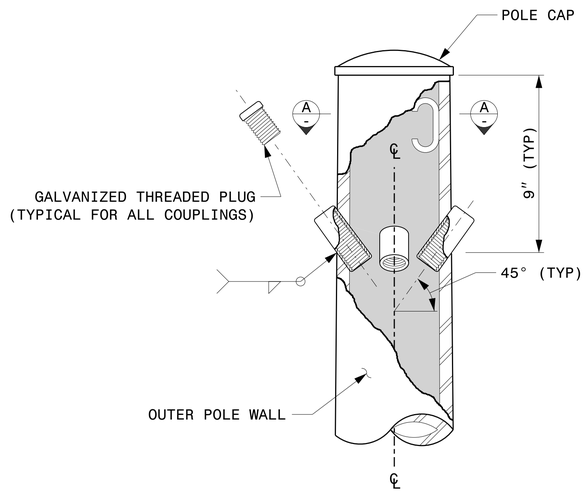

CABLE ENTRANCES AT TOP OF POLE

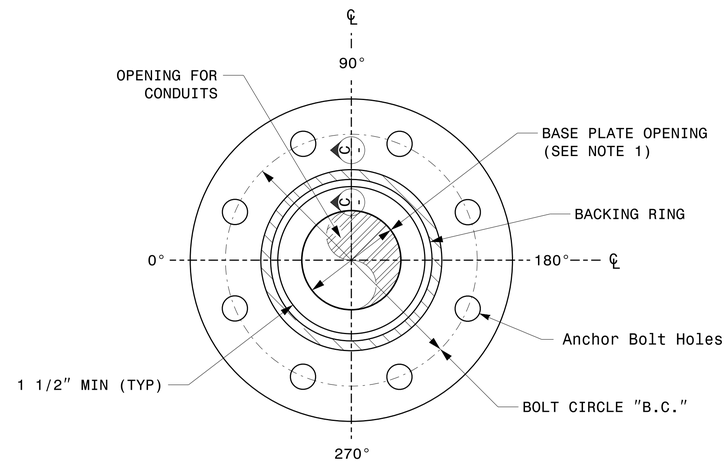

SECTION B-B

POLE BASE PLATE DETAILS
(8 AND 12 BOLT PATTERN)

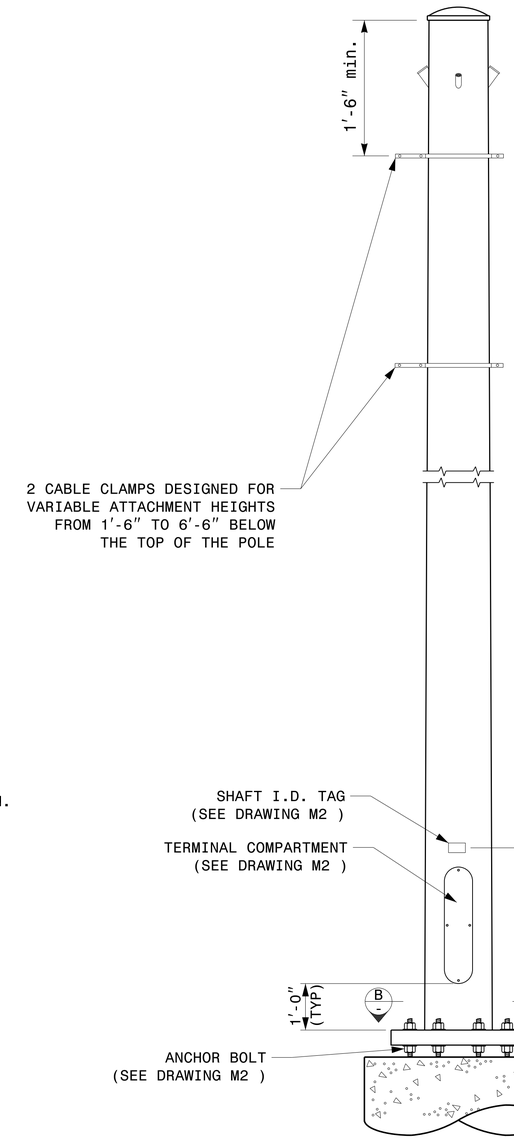

MONOTUBE STRAIN POLE

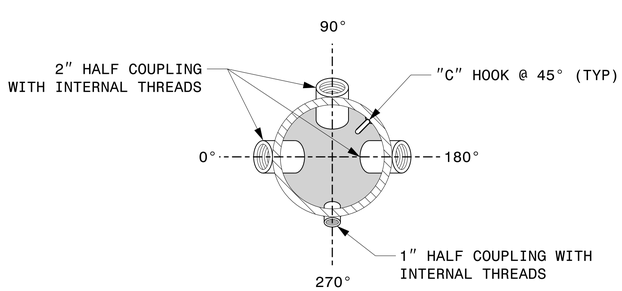

SECTION A-A

RADIAL ORIENTATION OF FACTORY INSTALLED ACCESSORIES AT TOP OF POLE

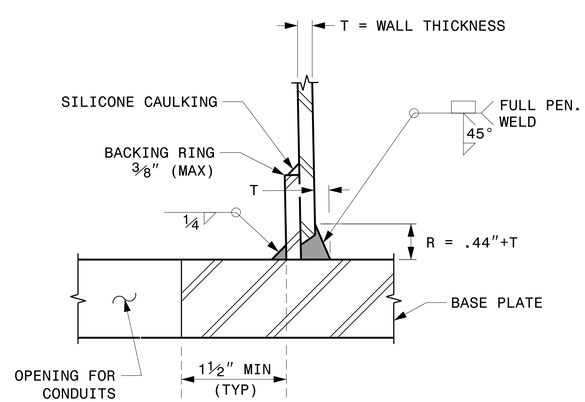

SECTION C-C

(POLE ATTACHMENT TO BASE PLATE)

FULL-PENETRATION GROOVE WELD DETAIL

Fabrication Details – Strain Poles

Prepared in the Offices of:
Transportation Mobility and Safety Division
Signal Design Section
750 N.Greenfield Pkwy,Garner,NC 27529

SCALE
0 NA
NONE

Typical Fabrication Details
For
Strain Poles

PLAN DATE:	SEPTEMBER 2023	DESIGNED BY:	K.C. DURIGON
PREPARED BY:	K.C. DURIGON	REVIEWED BY:	D.C. SARKAR

REVISIONS	INIT.	DATE

SEAL
NORTH CAROLINA PROFESSIONAL SEAL 036626 ENGINEER KEVIN C. DURIGON

DocuSigned by:
Kevin Durigon
SIGNATURE
4B23DC79B3784DA...
09/21/2023
DATE

03-OCT-2023 12:31
S:*ITSSUM\ITS Signals\Signal Design Sections\Structures\Drawings\2024 Metal Pole Std Drawings for LRFD\2024 Sig.M3 Std. Fabrication Details-Strain Poles.dgn
kcdurigon

PROJECT I.D. NO.	SHEET NO.
	Sig.M4

NOTE:

1. OPENING IN POLE BASE PLATE SHALL BE EQUAL TO POLE BASE INSIDE DIAMETER MINUS 3½" BUT SHALL NOT BE LESS THAN 8½".

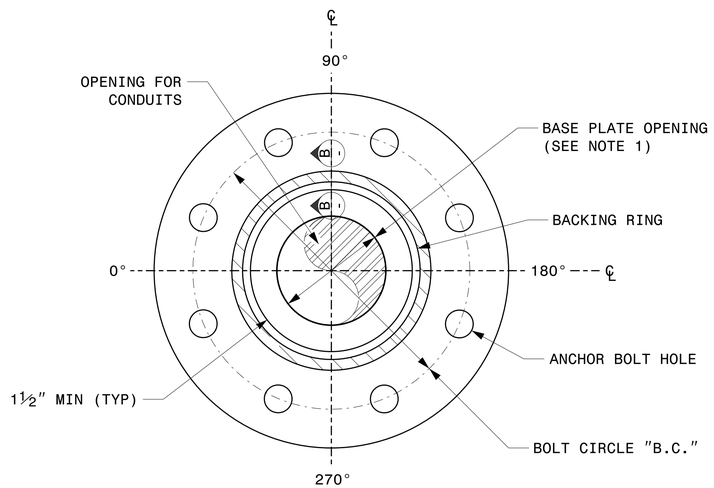

SECTION A-A
POLE BASE PLATE DETAILS

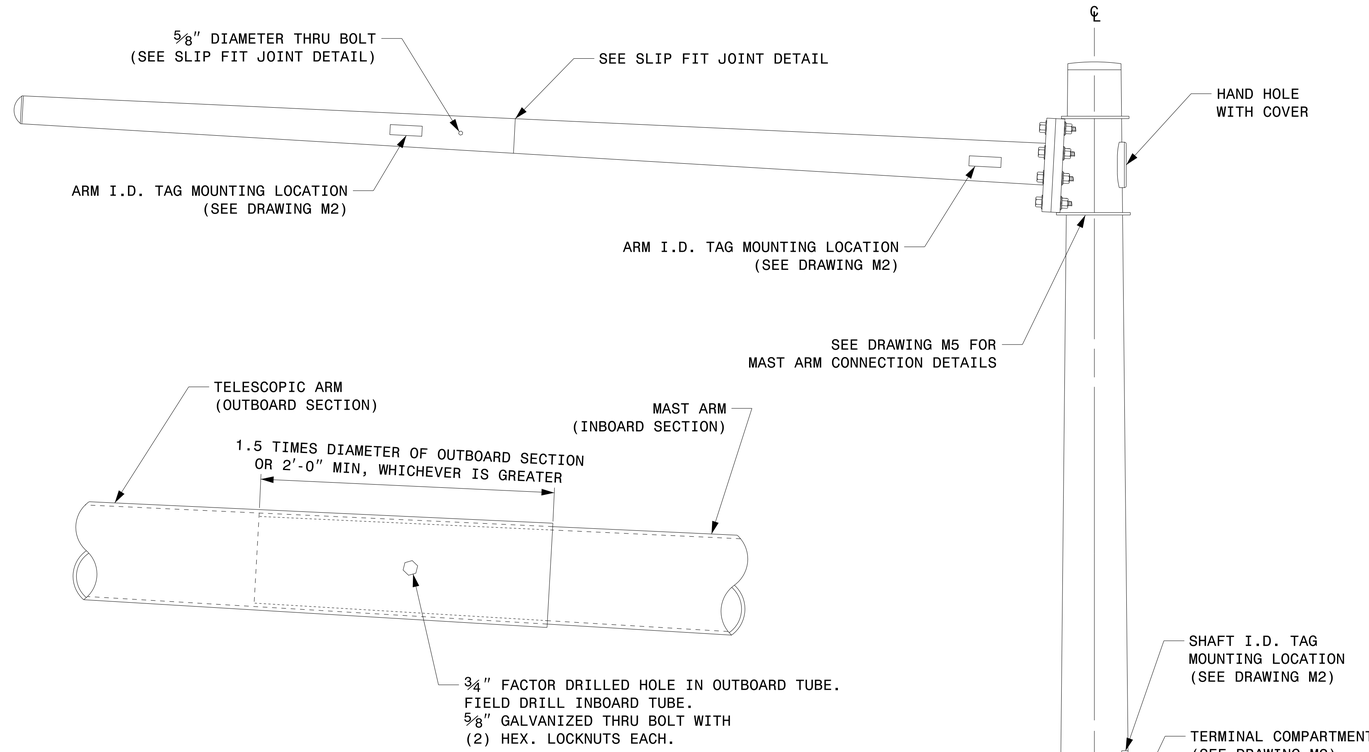

SLIP FIT JOINT DETAIL FOR MAST ARM

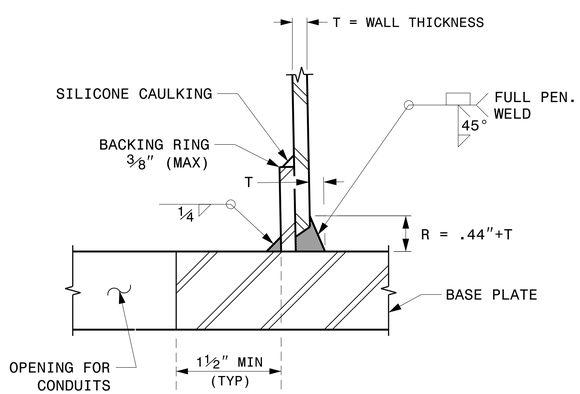

SECTION B-B
(POLE ATTACHMENT TO BASE PLATE)

FULL-PENETRATION GROOVE WELD DETAIL

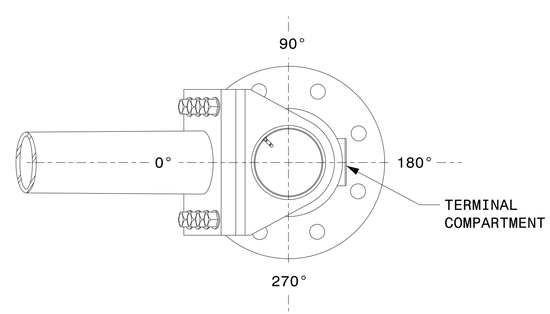

MAST ARM RADIAL ORIENTATION

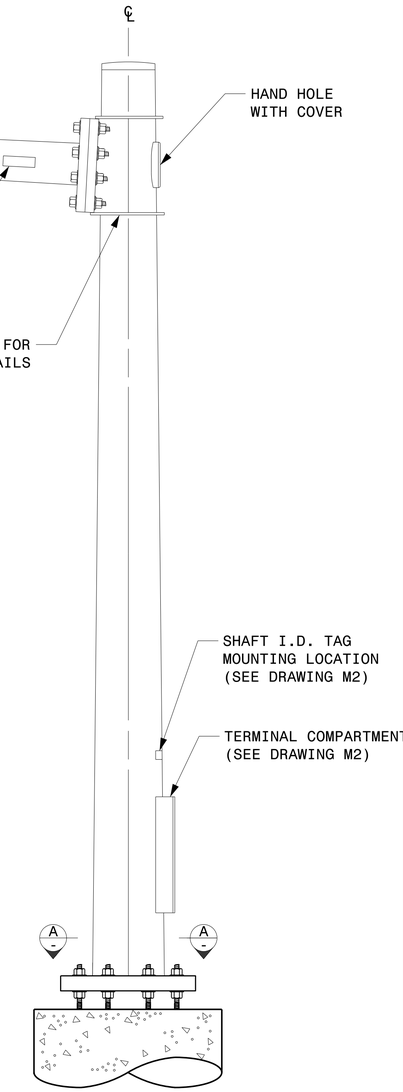

MAST ARM POLE

Fabrication Details – Mast Arm Poles

Prepared in the Offices of:
Transportation Mobility and Safety Division
Signal Design Section
750 N.Greenfield Pkwy,Garner,NC 27529

SCALE 0 NA
NONE

Typical Fabrication Details For Mast Arm Poles

PLAN DATE:	SEPTEMBER 2023	DESIGNED BY:	K.C. DURIGON
PREPARED BY:	K.C. DURIGON	REVIEWED BY:	D.C. SARKAR

REVISIONS	INIT.	DATE

SEAL
NORTH CAROLINA PROFESSIONAL SEAL 036626 ENGINEER KEVIN C. DURIGON

DocuSigned by:
Kevin Durigon
SIGNATURE
4B23DC79B3784DA...
09/21/2023
DATE

03-OCT-2023 12:25
S:\4TIS\SIGNALS\Signal Design Section\Structures\Drawings\2024 Metal Pole Std Drawings for LRFD\2024 Sig.M4 Std. Fabrication Details-Mast Arm Poles.dgn
kcdurigon

WELDED RING STIFFENED MAST ARM CONNECTION

PROJECT I.D. NO.	SHEET NO.
	Sig.M5

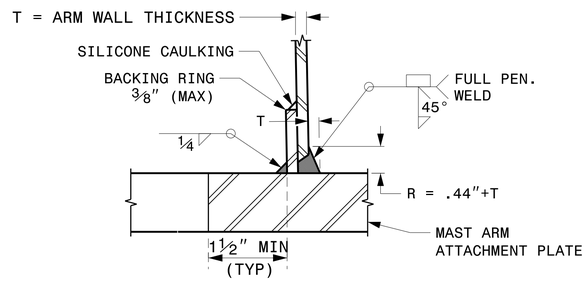

SECTION B-B
FULL-PENETRATION GROOVE WELD DETAIL

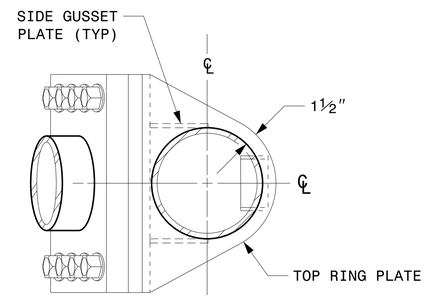

PLAN VIEW

NOTES:

1. PROVIDE A PERMANENT MEANS OF IDENTIFICATION ABOVE THE MAST ARM TO INDICATE PROPER ATTACHMENT ORIENTATION OF THE MAST ARM.
2. DESIGNER WILL DETERMINE THE SIZE OF ALL STRUCTURAL COMPONENTS, PLATES, FASTENERS, AND WELDS SHOWN UNLESS THEY ARE ALREADY SPECIFIED.
3. FABRICATOR IS RESPONSIBLE FOR PROVIDING APPROPRIATE HOLES AT DRAINAGE POINTS TO DRAIN GALVANIZING MATERIALS.
4. FOR MINIMUM EDGE DISTANCE AND NOMINAL BOLT HOLE SIZE, FOLLOW THE LATEST AISC STEEL CONSTRUCTION MANUAL.
5. PROVIDE UPPER HANDHOLE AS NECESSARY WHEN SHAFT EXTENSIONS ARE REQUIRED FOR LUMINAIRE ARMS OR CAMERA. FOR POLES WITHOUT LUMINAIRES/CAMERA, WIRING CAN BE DONE THROUGH THE TOP OF POLE.
6. ALLOWABLE RANGE OF FLANGE TILT ANGLE WILL VARY FROM 0° TO AS REQUIRED.

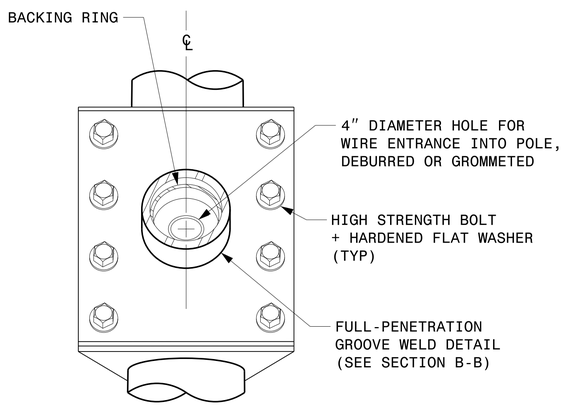

FRONT ELEVATION VIEW

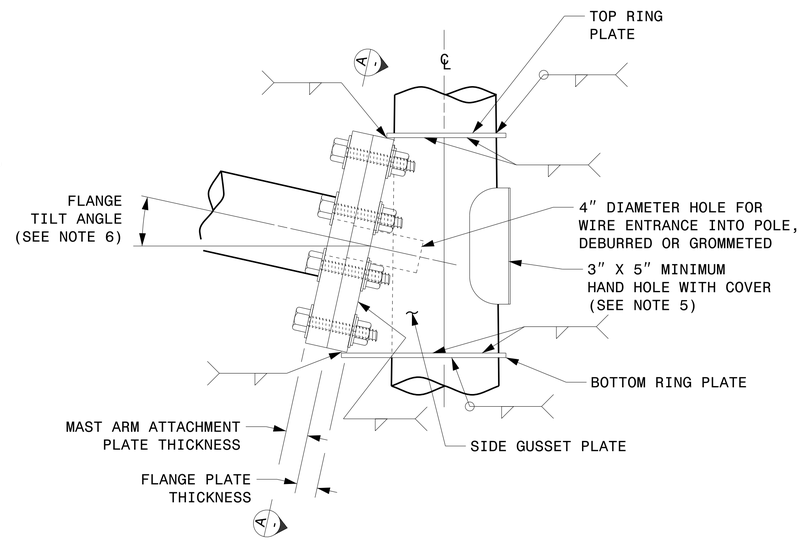

SIDE ELEVATION VIEW

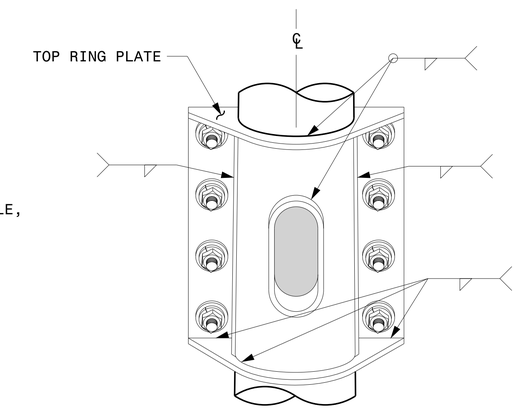

BACK ELEVATION VIEW

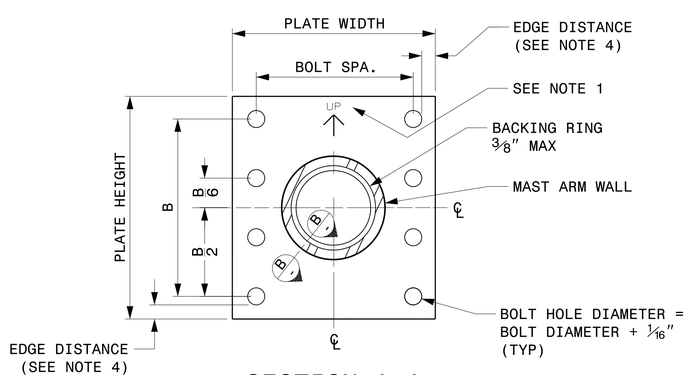

SECTION A-A
MAST ARM ATTACHMENT PLATE

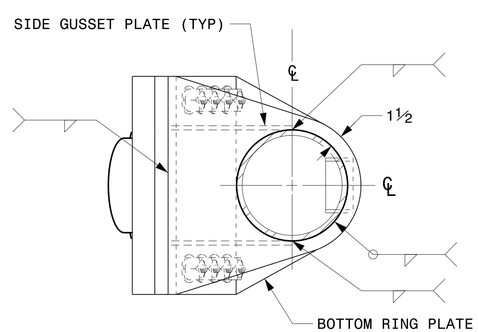

BOTTOM VIEW

Fabrication Details – Mast Arm Connection

Prepared in the Offices of:
Transportation Mobility and Safety Division
Signal Design Section
750 N.Greenfield Pkwy,Garner,NC 27529

SCALE 0 NA
NONE

Typical Fabrication Details
For
Mast Arm Connection To Pole

PLAN DATE:	SEPTEMBER 2023	DESIGNED BY:	C.F. ANDREWS
PREPARED BY:	K.C. DURIGON	REVIEWED BY:	D.C. SARKAR

REVISIONS	INIT.	DATE

SEAL
NORTH CAROLINA PROFESSIONAL SEAL 036626 ENGINEER KEVIN C. DURIGON

DocuSigned by:
Kevin Durigon
4B23DC79B3784DA...
SIGNATURE
09/21/2023
DATE

03-OCT-2023 12:38
S:\HTS\SOLUTIONS\ITS\Signals\Signal Design Section\Structures\Drawings\2024 Metal Pole Std Drawings for LRFD\2024 Sig.M5 Std. Connection Fabrication Details-Mast Arm Poles.dgn
kcdurigon

PROJECT I.D. NO.	SHEET NO.
	Sig.M6

Fabrication Details – Strain Pole Attachments

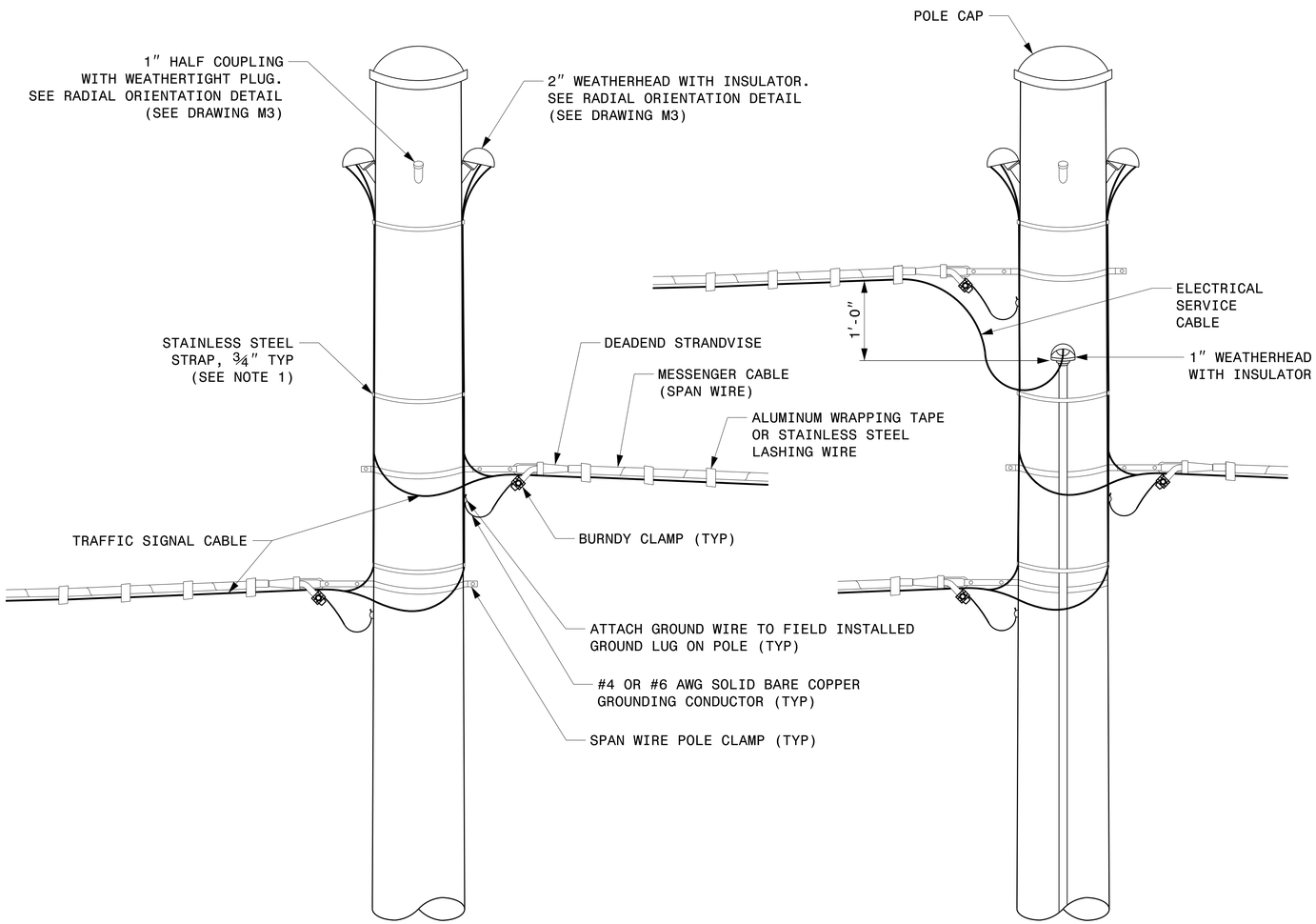

STRAIN POLE ATTACHMENTS

NOTES:

1. STRAP ALL SIGNAL CABLES TO THE SIDE OF THE POLE WITH ¾″ STAINLESS STEEL STRAPS WHEN THE DISTANCE BETWEEN SPAN WIRE ATTACHMENT CLAMP AND WEATHERHEADS EXCEEDS 3′-0″.
2. PROVIDE MINIMUM TWO SPAN WIRE POLE CLAMPS PER POLE.
3. IT IS PROHIBITED TO ATTACH TWO SPAN WIRES AT ONE POLE CLAMP.
4. FOR GENERAL REQUIREMENTS, REFER TO NCDOT STANDARD SPECIFICATIONS FOR ROADWAY AND STRUCTURES, JANUARY 2024.

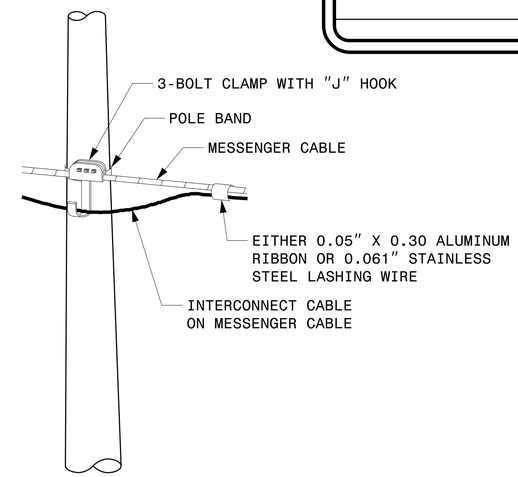

ATTACHMENT OF CABLE TO INTERMEDIATE METAL POLE

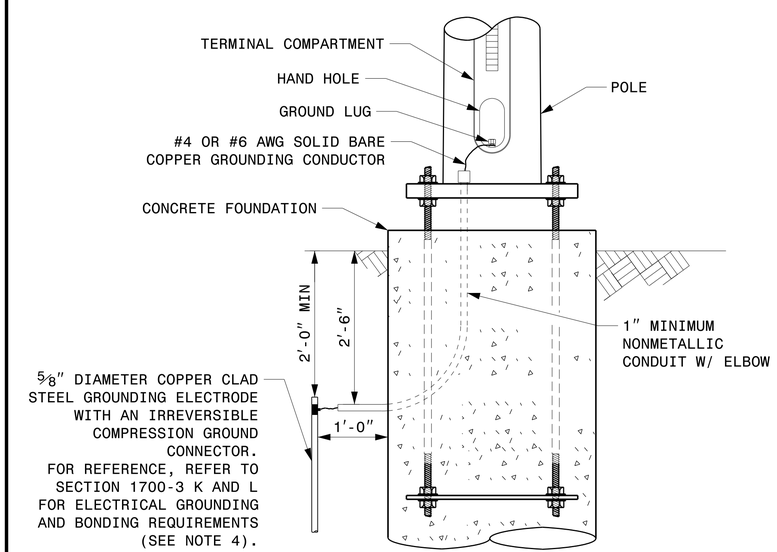

METAL POLE GROUNDING DETAIL FOR STRAIN POLE AND MAST ARM

Prepared in the Offices of:
Transportation Mobility and Safety Division
Signal Design Section
750 N.Greenfield Pkwy,Garner,NC 27529

SCALE
0 NA
NONE

Typical Fabrication Details
For
Strain Pole Attachments

PLAN DATE:	SEPTEMBER 2023	DESIGNED BY:	C.F. ANDREWS
PREPARED BY:	K.C. DURIGON	REVIEWED BY:	D.C. SARKAR

REVISIONS	INIT.	DATE

SEAL
NORTH CAROLINA PROFESSIONAL SEAL 036626 ENGINEER KEVIN C. DURIGON

DocuSigned by:
Kevin Durigon
SIGNATURE
4B23DC79B3784DA...
09/21/2023
DATE

03-OCT-2023 12:41
S:\TIMS\LIMITS\Signals\Signal Design Sections\Structures\Drawings\2024 Metal Pole Std Drawings for LRFD\2024 Sig.M6 Std. Fabrication Details-Strain Poles.dgn
kcdurigon

PROJECT I.D. NO.	SHEET NO.
	Sig.M7

Construction Details – Foundations

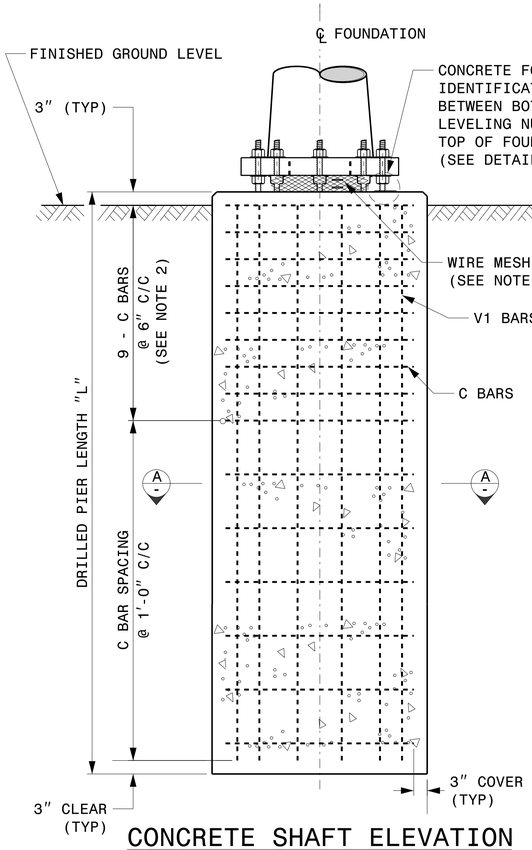

CONCRETE SHAFT ELEVATION

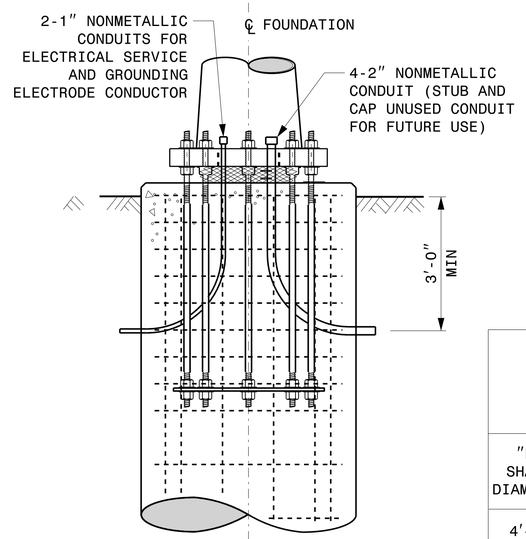

TYPICAL FOUNDATION CONDUIT DETAILS

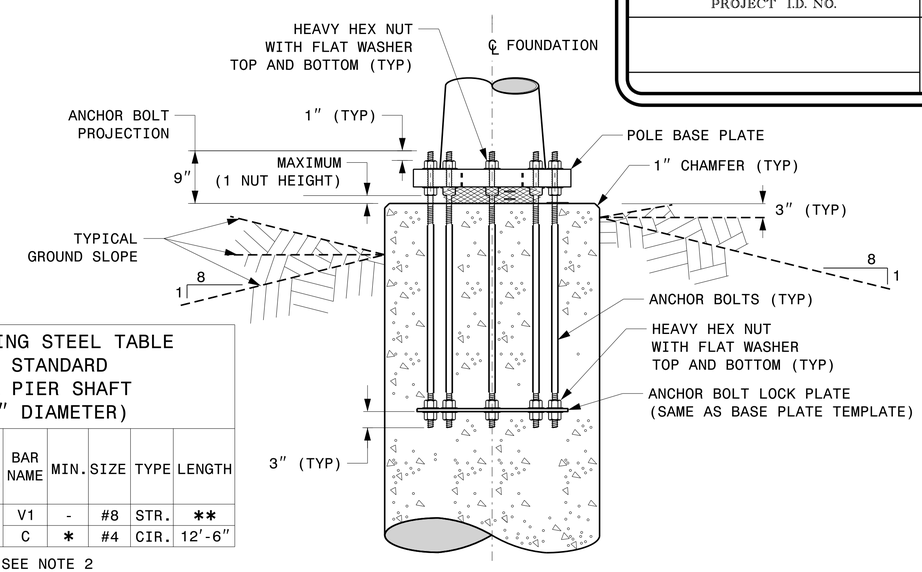

TYPICAL FOUNDATION ANCHOR BOLT DETAILS

(REINFORCING CAGE NOT SHOWN FOR CLARITY)

REINFORCING STEEL TABLE FOR STANDARD DRILL PIER SHAFT (4′-0″ DIAMETER)

"D" SHAFT DIAMETER	CONCRETE VOLUME (CU. YDS)	BAR NAME	MIN.	SIZE	TYPE	LENGTH
4′-0″	.465 X L	V1	-	#8	STR.	**
		C	*	#4	CIR.	12′-6″

* SEE NOTE 2
** SEE NOTE 3

GENERAL NOTES:

1. IF ACTUAL SUBSURFACE CONDITIONS DIFFER SIGNIFICANTLY FROM BORING DATA, CONTACT THE ENGINEER BEFORE EXCAVATING OR PLACING CONCRETE.
2. CIRCULAR TIE REINFORCING RINGS MAY BE VERTICALLY ADJUSTED BY +/-3″ AT A DEPTH BETWEEN 2′-0″ AND 3′-0″ TO FACILITATE THE INSTALLATION OF ELECTRICAL CONDUIT ENTERING IN THE CAGE.
3. FOR STANDARD FOUNDATIONS, SEE SHEET SIG. M8 FOR DETAILS. VERTICAL REINFORCING BARS (V1) MAY BE HORIZONTALLY ADJUSTED BY +/-3″ TO FACILITATE THE INSTALLATION OF ELECTRICAL CONDUIT ENTERING INTO THE CAGE.
4. PROVIDE 2″ TO 5″ FOUNDATION PROJECTION ABOVE GROUND LEVEL, DEPENDING ON THE GROUND SLOPE.
5. UNLESS OTHERWISE SHOWN, FOUNDATION DESIGNS ARE BASED ON NON-SLOPING LEVEL GROUND SURFACES WITH SLOPE RATIOS OF 8:1 (H:V) OR FLATTER. IF ACTUAL GROUND LINE SLOPES ARE STEEPER, CONTACT THE ENGINEER BEFORE EXCAVATING OR PLACING CONCRETE.
6. CONSTRUCT FOUNDATIONS IN ACCORDANCE WITH NCDOT STANDARD PROVISIONS SP09 R005- FOUNDATIONS AND ANCHOR ROD ASSEMBLIES FOR METAL POLES. ALL APPLICABLE 2024 NCDOT STANDARD SPECIFICATIONS ARE REFERENCED IN THIS PROVISION. REFER TO THE NCDOT RESOURCES/SPECIFICATIONS PAGE LOCATED ON THE CONNECT NCDOT WEBSITE.

   https://connect.ncdot.gov/resources/Specifications and Special Provisions.aspx
7. USE AIR ENTRAINED AA CONCRETE MIX WITH A COMPRESSION STRENGTH OF f′c=4500 psi (MIN) AFTER 28 DAYS.
8. USE ASTM A615 GRADE 60 DEFORMED BARS FOR ALL REINFORCING STEEL. MAINTAIN AT LEAST 3″ COVER ON ALL REINFORCEMENT.
9. LOCATE IDENTIFICATION TAG ON TOP OF THE FOUNDATION, DIRECTLY ABOVE THE CONDUIT'S ENTRY POINT.
10. PROVIDE TWO LAYERS OF 4 MESH GALVANIZED WELDED 23 GAUGE (0.025) 6″ WIDE AROUND PIPES UNDER THE BASE PLATE AND SECURE IT WITH TIES IF NECESSARY.
11. PREFERRED LOCATION FOR THE I.D. TAG IS AS SHOWN IN DETAIL-A: DIRECTLY ABOVE THE CONDUIT ENTERING THE FOUNDATION.

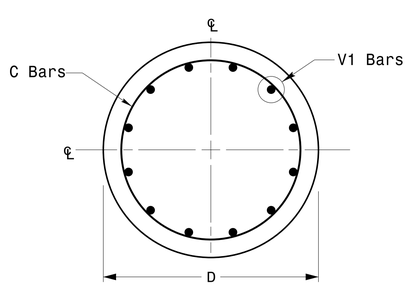

SECTION A-A

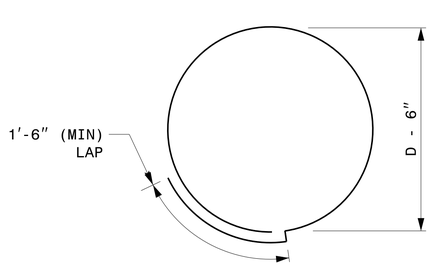

TYPICAL "C" BAR DETAIL

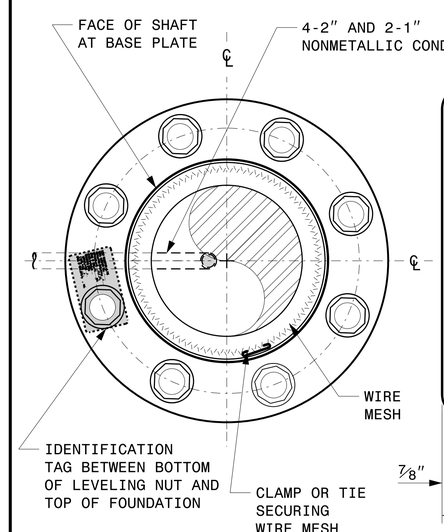

D = DIAMETER
L = LENGTH / DEPTH
mm = MONTH
yy = YEAR

DETAIL-A

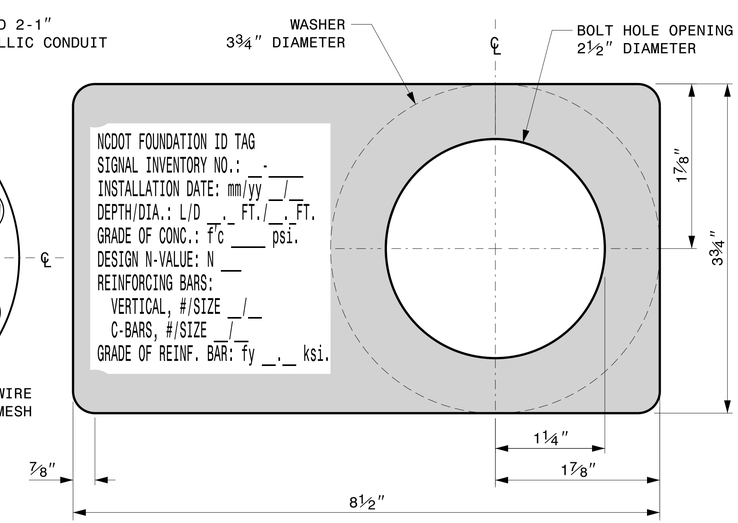

CONCRETE FOUNDATION IDENTIFICATION TAG DETAILS

Prepared in the Offices of:
Transportation Mobility and Safety Division
Signal Design Section
750 N.Greenfield Pkwy,Garner,NC 27529

SCALE
0 NA
NONE

Construction Details For Foundations

PLAN DATE: SEPTEMBER 2023	DESIGNED BY: K.C. DURIGON
PREPARED BY: K.C. DURIGON	REVIEWED BY: D.C. SARKAR

REVISIONS	INIT.	DATE

SEAL
NORTH CAROLINA PROFESSIONAL SEAL 036626 ENGINEER KEVIN C. DURIGON

DocuSigned by:
Kevin Durigon
SIGNATURE
4B23DC79B3784DA...
09/21/2023
DATE

03-OCT-2023 12:45
S:\TSSGU\413\Signals\Signal Design Section\Structures\Drawings\2024 Metal Pole Std Drawings for LRFD\2024 Sig.M7 Std. Construction Details-Strain Poles.dgn
kcdurigon

PROJECT I.D. NO.	SHEET NO.
	Sig.M8

SOIL CONDITION

STANDARD STRAIN POLES						STANDARD FOUNDATIONS 48″ Diameter Drilled Pier Length (L) – Feet							Reinforcement			
			Reactions at the Pole Base			Clay				Sand			Longitudinal		Stirrups	
Case No.	Pole Height (Ft.)	Base Plate BC (In.)	Axial (kip)	Shear (kip)	Moment (ft–kip)	Medium N–Value 4–8	Stiff N–Value 9–15	Very Stiff N–Value 16–30	Hard N–Value >30	Loose N–Value 4–10	Medium N–Value 11–30	Dense N–Value >30	Bar Size (#)	Quantity (ea.)	Bar Size (#)	Spacing (in.)
S26L1	26	22	2	9	210	19.5	12.5	9	6.5	15.5	14.5	13	8	12	4	12
S26L2	26	23	2	10	240	19.5	12	9	6.5	15.5	14.5	13	8	12	4	12
S26L3	26	25	2	11	260	20.5	12	10	8	16	15	13	8	12	4	12
S30L1	30	22	2	9	230	19	11	9	7	15.5	14	12.5	8	12	4	12
S30L2	30	23	2	10	270	20	12	10	8	16	14.5	13	8	12	4	12
S30L3	30	25	2	11	290	21	12	10	8	17	15	13.5	8	12	4	12
S30H1	30	25	3	13	355	23	13	11	9	18	16.5	14.5	8	12	4	12
S30H2	30	29	3	15	405	25	14	11	9	19	17.5	15.5	8	14	4	12
S30H3	30	29	3	16	430	26	15	12	9	20	18	16	8	14	4	6
S35L1	35	22	3	8	260	19.5	12	10	8	15.5	14.5	13	8	12	4	12
S35L2	35	23	3	10	300	21	12	10	8	16.5	15	13.5	8	12	4	12
S35L3	35	25	3	10	320	21.5	13	10	8	17	15.5	14	8	12	4	12
S35H1	35	25	3	12	390	23.5	14	11	9	18	17	15	8	14	4	12
S35H2	35	29	4	14	460	26	15	12	9	20	18	16	8	14	4	6
S35H3	35	29	4	16	495	28.5	15	13.5	10	21.5	19	17	8	14	4	6

48″ DIAMETER FOUNDATION CONCRETE VOLUME (CUBIC YARDS) = (0.465) x DRILLED PIER LENGTH

GENERAL NOTES:

1. VALUES SHOWN IN THE "REACTIONS AT THE POLE BASE" COLUMN REPRESENT THE MINIMUM ACCEPTABLE CAPACITY ALLOWED FOR DESIGN USING A COMBINED FORCE RATIO (CFR) OF 1.00.
2. USE CHAIRS AND SPACERS TO MAINTAIN PROPER CLEARANCE.
3. FOR FOUNDATION, ALWAYS USE AIR-ENTRAINED CONCRETE MIX.

FOUNDATION SELECTION:

1. PERFORM A STANDARD PENETRATION TEST AT EACH PROPOSED FOUNDATION SITE TO DETERMINE "N" VALUE.
2. SELECT THE APPROPRIATE WIND ZONE FROM M1 DRAWING.
3. SELECT THE SOIL TYPE (CLAY OR SAND) THAT BEST DESCRIBES THE SOIL CHARACTERISTICS.
4. GET THE APPROPRIATE STANDARD POLE CASE NUMBER FROM THE PLANS OR FROM THE ENGINEER.
5. SELECT THE APPROPRIATE COLUMN UNDER "STANDARD FOUNDATIONS" BASED ON SOIL TYPE AND "N" VALUE. SELECT THE APPROPRIATE ROW BASED ON THE POLE LOAD CASE.
6. THE FOUNDATION DEPTH IS THE VALUE SHOWN IN THE "STANDARD FOUNDATIONS" CATEGORY WHERE THE COLUMN AND THE ROW INTERSECT.
7. USE CONSTRUCTION PROCEDURES AND DESIGN METHODS PRESCRIBED BY FHWA-NHI-10-016 MANUAL FOR DRILLED SHAFTS.

Standard Strain Pole Foundation – All Soil Conditions

Prepared in the Offices of:
Transportation Mobility and Safety Division
Signal Design Section
750 N.Greenfield Pkwy,Garner,NC 27529

SCALE 0 NA
NONE

Standard Strain Pole Foundation for All Soil Conditions

PLAN DATE:	SEPTEMBER 2023	DESIGNED BY:	K.C. DURIGON
PREPARED BY:	K.C. DURIGON	REVIEWED BY:	D.C. SARKAR

REVISIONS	INIT.	DATE

SEAL
NORTH CAROLINA PROFESSIONAL SEAL 036626 ENGINEER KEVIN C. DURIGON

DocuSigned by:
Kevin Durigon
SIGNATURE
4B23DC79B3784DA...
09/21/2023
DATE

03-OCT-2023 12:48
S:*ITS*Signals*Signal Design Section*Structures*Drawings*2024 Metal Pole Std Drawings for LRFD*2024 Sig.M8 Std. Strain Pole Found.-Saturated Soil Condition.dgn
kcdurigon

Docusign Envelope ID: C9BA2331-AA47-4D29-819A-046D4C38A13F

PROJECT REFERENCE NO.	SHEET NO.
R-5600	SCP-1

1. INSTALL COAX CABLE
2. INSTALL ETHERNET CABLE
3. EXISTING ETHERNET (OR COAX) CABLE
4. INSTALL SMFO CABLE
5. EXISTING SMFO CABLE
6. INSTALL FIBER OPTIC DROP CABLE ASSEMBLY
7. INSTALL TRACER WIRE
8. TRENCH
9. INSTALL PVC CONDUIT
10. INSTALL RIGID, GALVANIZED STEEL CONDUIT
11. INSTALL RIGID, GALVANIZED STEEL RISER WITH WEATHERHEAD
12. INSTALL RIGID, GALVANIZED STEEL RISER WITH FIBER OPTIC CABLE SEAL
13. INSTALL OUTER–DUCT POLYETHYLENE CONDUIT
14. INSTALL POLYETHYLENE CONDUIT
15. DIRECTIONAL DRILL CONDUIT
16. BORE AND JACK CONDUIT
17. INSTALL CABLE(S) IN EXISTING CONDUIT
18. INSTALL CABLE(S) IN NEW CONDUIT
19. INSTALL CABLE(S) IN EXISTING RISER
20. INSTALL CABLE(S) IN NEW RISER
21. INSTALL CABLE(S) IN EXISTING CONDUIT STUB–OUTS
22. INSTALL NEW CONDUIT INTO EXISTING CABINET BASE (USE EXISTING CONDUIT STUB–OUTS WHEN AVAILABLE)
23. INSTALL NEW RISER INTO EXISTING CABINET BASE (USE EXISTING CONDUIT STUB–OUTS WHEN AVAILABLE)
24. INSTALL NEW CONDUIT INTO EXISTING POLE MOUNTED CABINET
25. INSTALL NEW RISER INTO EXISTING POLE MOUNTED CABINET
26. INSTALL NEW ETHERNET EDGE SWITCH
27. INSTALL NEW FIBER OPTIC TRANSCEIVER
28. INSTALL INTERCONNECT CENTER, PATCH PANEL, JUMPERS AND FUSION SPLICE CABLE IN CABINET
29. INSTALL UNDERGROUND SPLICE ENCLOSURE
30. INSTALL AERIAL SPLICE ENCLOSURE
31. MODIFY EXISTING INTERCONNECT CENTER /SPLICE ENCLOSURE
32. INSTALL POLE MOUNTED SPLICE CABINET
33. INSTALL BASE MOUNTED SPLICE CABINET
34. INSTALL CABINET FOUNDATION
35. INSTALL CCTV CAMERA POLE MOUNTED CABINET
36. INSTALL CCTV CAMERA ASSEMBLY
37. INSTALL CCTV CAMERA WOOD POLE
38. INSTALL CCTV CAMERA METAL POLE AND FOUNDATION
39. INSTALL JUNCTION BOX
40A. INSTALL OVERSIZED JUNCTION BOX
40B. INSTALL SPECIAL OVERSIZED JUNCTION BOX (36" x 24" x 24")
41. REMOVE EXISTING JUNCTION BOX
42. INSTALL WOOD POLE
43. REMOVE EXISTING WOOD POLE
44. INSTALL AERIAL GUY ASSEMBLY
45. INSTALL STANDARD GUY ASSEMBLY
46. INSTALL SIDEWALK GUY ASSEMBLY
47. INSTALL MESSENGER CABLE
48A. REMOVE EXISTING COMMUNICATIONS AND MESSENGER CABLE
48B. REMOVE EXISTING COMMUNICATIONS CABLE
49. BACK PULL EXISTING COMMUNICATIONS CABLE
50. INSTALL CELL MODEM AND ANTENNA
51. INSTALL CABLE STORAGE RACKS (SNOW SHOES) AND STORE 100 FEET OF CABLE
52A. INSTALL DELINEATOR MARKER
52B. INSTALL JUNCTION BOX MARKER
53A. STORE 20 FEET OF COMMUNICATIONS CABLE
53B. STORE 50 FEET OF EACH COMMUNICATIONS CABLE
54. LASH CABLE(S) TO EXISTING COMMUNICATIONS CABLE
55. LASH CABLE(S) TO EXISTING MESSENGER CABLE
56. LASH CABLE(S) TO NEW MESSENGER CABLE
57. MODIFY EXISTING ELECTRICAL SERVICE
58. INSTALL NEW ELECTRICAL SERVICE
59. INSTALL NEW EQUIPMENT CABINET DISCONNECT
60. BOND TRACER WIRE TO EQUIPMENT GROUND BUS
61. DO NOT BOND TRACER WIRE TO EQUIPMENT GROUND BUS
62. BOND RISER AND MESSENGER CABLE TO POLE GROUND
63. BOND RISER TO POLE GROUND
64. BOND MESSENGER CABLE TO POLE GROUND
65. INSTALL HEAT SHRINK TUBING RETROFIT KIT
66. INSTALL MOLDABLE DUCT SEAL
67. SLACK SPAN

LEGEND

FO	NEW FIBER OPTIC COMMUNICATIONS CABLE
EXI	EXISTING COMMUNICATIONS CABLE
REM	EXISTING COMMUNICATIONS CABLE TO BE REMOVED
	NEW AERIAL GUY ASSEMBLY
	NEW CONDUIT
	EXISTING CONDUIT
DD	NEW DIRECTIONAL DRILLED CONDUIT

NEW		EXISTING
	OVERSIZED JUNCTION BOX	
	WOOD POLE	
S	AERIAL SPLICE ENCLOSURE	S
S	UNDERGROUND SPLICE ENCLOSURE	S
	METAL POLE	
	CCTV ASSEMBLY	
	STANDARD GUY ASSEMBLY	
	SIDEWALK GUY ASSEMBLY	
	CABLE STORAGE RACKS (SNOW SHOES)	
	SIGNAL/EQUIPMENT CABINET	
G	Gateway Cabinet	G
S	SPLICE CABINET	S
	FLAT PANEL ANTENNA (SINGLE)	
	YAGI ANTENNA (DOUBLE) FOR REPEATER OPERATION	
	YAGI ANTENNA (SINGLE)	
	OMNI ANTENNA	
SP	SIGNAL POLE	SP
XX–XXXX	SIGNAL INVENTORY NUMBER	XX–XXXX

CONSTRUCTION NOTE SYMBOLOGY KEY

- XX — INDICATES NUMBER OF CABLES, LOOPS, ETC.
- XX — INDICATES NUMBER OF FIBERS PER CABLE, TWISTED PAIRS PER CABLE, ETC.
- XX — INDICATES NUMBER OF RISER(S)/CONDUIT(S)
- XX — INDICATES DIAMETER OF RISER(S)/CONDUIT(S) (INCH)

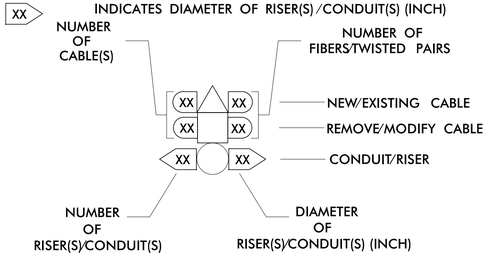

Plans Prepared By:

DRMP
DRMP, INC.
8210 UNIVERSITY EXECUTIVE PARK DR.
SUITE 220
CHARLOTTE, NC 28262
NC LICENSE NO. F-1524 (704) 549-4260

Prepared for the Offices of:
Transportation Mobility and Safety Division
Intelligent Transportation Systems & Signals Management Section
750 N. Greenfield Pkwy, Garner, NC 27529

Construction Notes

Division 14 Jackson County Sylva

PLAN DATE:	June 2025	REVIEWED BY:	BN Groome
PREPARED BY:	DJ White	REVIEWED BY:	LM Moon

REVISIONS	INIT.	DATE

DOCUMENT NOT CONSIDERED FINAL UNLESS ALL SIGNATURES COMPLETED

SEAL
NORTH CAROLINA PROFESSIONAL SEAL 052936 ENGINEER BRITTANY N GROOME

Signed by: Brittany Groome 8/26/2025
1E09343E1084484... DATE

11-JUN-2025 17:51
pw:\\Documents\NCDOT\NCDOT_Western_Div_On-Call_MC\NCDOT_6170_R5600_NC170_US33BUS\6.0_CAD_BIM\6.2_Work_In_Progress\R-5600 NCDOT File Structure\Traffic\Signals\Design\System\SCP-1.dgn
User:Fernando.Vazquez AT CHA-FVA20LE2