TIP NO.	SHEET NO.
U-5875	PMP-1

APPROVED: DocuSigned by: John Bauman 7FFD5B4C37984D1...

DATE: 9/10/2025

SEAL

NORTH CAROLINA PROFESSIONAL SEAL 052428 ENGINEER JOHN BAUMAN

DOCUMENT NOT CONSIDERED FINAL UNLESS ALL SIGNATURES COMPLETED

STATE OF NORTH CAROLINA
DEPARTMENT OF TRANSPORTATION

PAVEMENT MARKING PLAN
PITT COUNTY

LOCATION: SR 1203 (ALLEN ROAD)
FROM SR 1467 (STANTONSBURG ROAD)
TO US 13 (DICKINSON AVENUE EXTENSION)

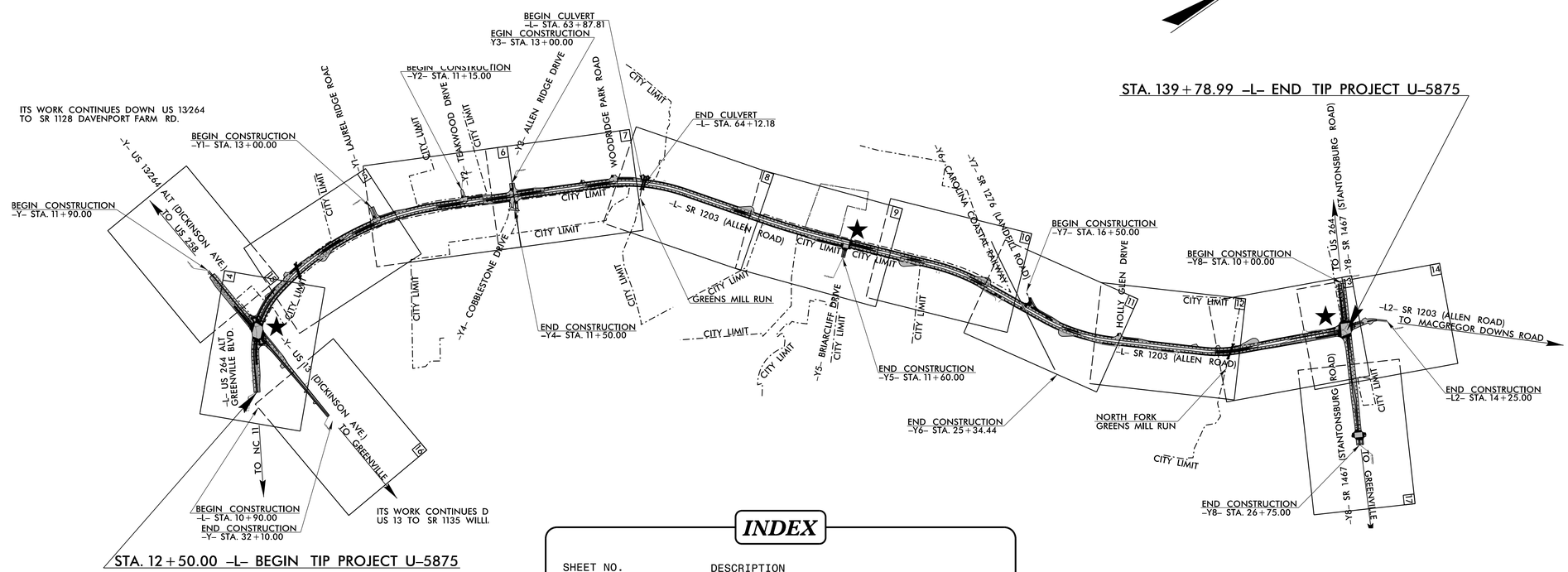

INDEX

SHEET NO.	DESCRIPTION
PMP-1	PAVEMENT MARKING PLAN TITLE SHEET
PMP-1A	PAVEMENT MARKER SPECIAL DETAIL
PMP-2	PAVEMENT MARKING SCHEDULE & QUANTITIES
PMP-3	GENERAL NOTES & ROADWAY STANDARD DRAWINGS
PMP-4-17	PAVEMENT MARKING DETAILS

TIP PROJECT: U-5875

CONTRACT: –

N.C.D.O.T. CONTACT INFORMATION

Mitch Eaton, PE — SIGNING AND DELINEATION REGIONAL ENGINEER

Stacey Johns — SIGNING AND DELINEATION PROJECT DESIGN ENGINEER

STATE OF NORTH CAROLINA DEPARTMENT OF TRANSPORTATION

PLAN PREPARED BY:

John Bauman, PE — PROJECT MANAGER

DESIGN ENGINEER

TRANSYSTEMS
1 Glenwood Avenue
Raleigh, NC 27603
Tel:919.789.9977
Fax:919.789.9591
License: F-0453

7/28/2025
S:\Traffic\PMP\PMP-1.dgn
USER:jbauman

TIP NO.	SHEET NO.
U-5875	PMP-1A

APPROVED: DocuSigned by: John Bauman 7FFD5B4C37984D1...

DATE: 9/10/2025

SEAL

NORTH CAROLINA PROFESSIONAL SEAL 052428 ENGINEER JOHN BAUMAN

DOCUMENT NOT CONSIDERED FINAL UNLESS ALL SIGNATURES COMPLETED

PROJECT REFERENCE NO.	SHEET NO.

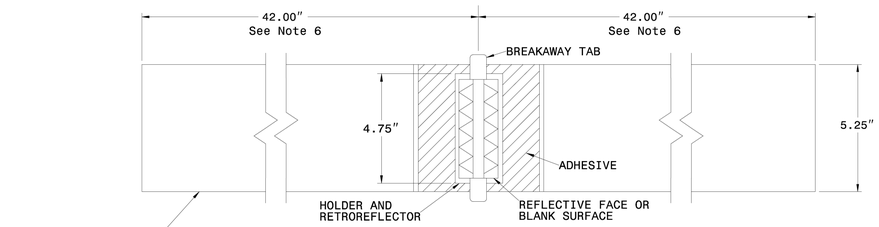

PLAN VIEW - TANGENT SECTIONS

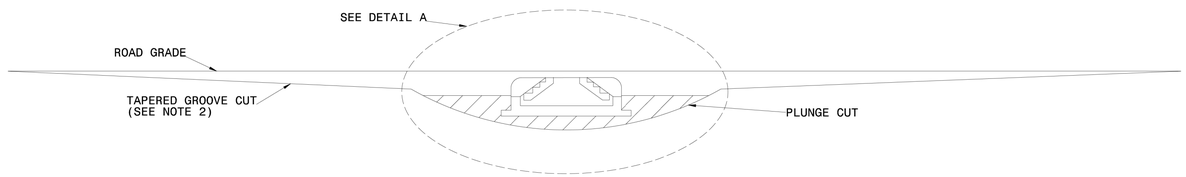

PROFILE VIEW

NORTH CAROLINA PROFESSIONAL SEAL 042546 ENGINEER MATTHEW V. SPRINGER

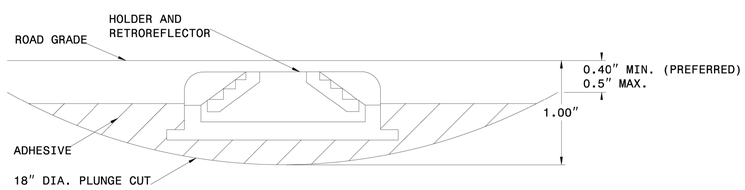

DETAIL A

MARKER SPACING

NOTES:

1. ALL GROOVE EDGES SHALL BE AT LEAST 2 INCHES FROM ANY SEAM OR PAVEMENT JOINT
2. GROOVE CUTS MAY BE TAPERED OR BEVELED. TAPERED CUTS SHALL START AT ROAD LEVEL ON EACH END AND TAPER AT A FIXED RATE AS SHOWN ON THE PROFILE VIEW. BEVELED GROOVE CUTS SHALL BE 0.5″ MAXIMUM DEPTH (0.4″ PREFERRED), AND SHALL BE 0.4″ MINIMUM DEPTH AT BOTH ENDS OF THE PLUNGE CUT.
3. GROOVE AND PLUNGE CUT SHALL BE CLEAN AND DRY PRIOR TO PLACEMENT OF ADHESIVE.
4. THE EPOXY ADHESIVE SHALL BE THOROUGHLY MIXED UNTIL IT IS UNIFORM IN COLOR, AND APPLIED IN COLOR, AND APPLIED IN ACCORDANCE WITH THE MANUFACTURER'S INSTALLATION INSTRUCTIONS.
5. MARKER SHALL BE INSTALLED AS PER MANUFACTURER'S INSTALLATION INSTRUCTIONS WITH THE BREAKWAY TABS RESTING ON THE PAVEMENT SURFACE. THE EPOXY SHALL BE FILLED TO THE LEVEL OF THE TOP OF THE MARKER HOLDER. EPOXY SHALL NOT TOUCH THE RETROREFELCTOR.
6. TOTAL GROOVE LENGTH MAY BE SHORTENED TO 54″ ON SHARP CURVES IF APPROVED BY THE ENGINEER. GROOVES SHALL NOT OVERLAP WITH LOOP DETECTOR WIRES.

CONTRACTS STANDARDS AND DEVELOPMENT UNIT
Office 919-707-8950 FAX 919-250-4119

DETAIL OF INLAID CRADLE MARKER

ORIGINAL BY:	rgwatson	DATE:	02-06-2024
MODIFIED BY:		DATE:	
CHECKED BY:		DATE:	
FILE SPEC.:			

TRANSYSTEMS
1 Glenwood Avenue
Raleigh, NC 27603
Tel:919.789.9977
Fax:919.789.9591
License: F-0453

PAVEMENT MARKER SPECIAL DETAIL

9/10/2025
12:25:57 PM
r:\c\PMP\PMP-1A.dgn
USER: bauman

TIP NO.	SHEET NO.
U-5875	PMP-2

APPROVED: DocuSigned by: John Bauman 7FFD5B4C37984D1...

DATE: 9/10/2025

SEAL

NORTH CAROLINA PROFESSIONAL SEAL 052428 ENGINEER JOHN BAUMAN

DOCUMENT NOT CONSIDERED FINAL UNLESS ALL SIGNATURES COMPLETED

PAVEMENT MARKING SCHEDULE

SYMBOL	DESCRIPTION
	THERMOPLASTIC (6″, 90 MILS)
T20	WHITE EDGE LINE
T21	WHITE SOLID LANE LINE
T22	10 FT. WHITE SKIP
T23	3 FT. - 9 FT./SP WHITE MINISKIP
T24	2 FT. - 6 FT./SP WHITE MINISKIP
T30	YELLOW EDGE LINE
T33	YELLOW DOUBLE CENTER
T34	2 FT. - 6 FT./SP YELLOW MINISKIP
	THERMOPLASTIC (12″, 90 MILS)
T46	WHITE CROSSWALK LINE
T50	WHITE GORE LINE
T51	WHITE DIAGONAL
T52	YELLOW DIAGONAL
T53	WHITE SOLID LANE LINE
T54	3 FT. - 9 FT./SP WHITE MINISKIP
	THERMOPLASTIC (16″, 90 MILS)
T60	WHITE LINE, RR X-ING
	THERMOPLASTIC (24″, 90 MILS)
T61	WHITE STOP BAR
	THERMOPLASTIC PAVEMENT MARKING SYMBOLS (90 MILS)
T70	LEFT TURN ARROW
T71	RIGHT TURN ARROW
T72	STRAIGHT ARROW
T73	COMBO. LEFT/STRAIGHT ARROW
T74	COMBO. RIGHT/STRAIGHT ARROW
T77	U-TURN ARROW
T90	BICYCLE SYMBOL
T91	BICYCLE STRAIGHT ARROW
T94	SHARROW
	THERMOPLASTIC PAVEMENT MARKING CHARACTERS (90 MILS)
T100	ALPHANUMERIC CHARACTER
T103	24″ YIELD LINE TRIANGLE
	PAVEMENT MARKERS
ME	SNOWPLOWABLE PAVEMENT MARKER
MF	SNOWPLOWABLE PAVEMENT MARKER

SUMMARY OF QUANTITIES

ITEM NO. DESC. NO.	ITEM NO. SECT. NO.	ITEM DESCRIPTION	QUANTITY	UNIT
4688000000-E	1205	THERMOPLASTIC PAVEMENT MARKING LINES (6″, 90 MILS)	57,859	LF
4700000000-E	1205	THERMOPLASTIC PAVEMENT MARKING LINES (12″, 90 MILS)	9,909	LF
4704000000-E	1205	THERMOPLASTIC PAVEMENT MARKING LINES (16″, 90 MILS)	210	LF
4709000000-E	1205	THERMOPLASTIC PAVEMENT MARKING LINES (24″, 90 MILS)	1,200	LF
4720000000-E	1205	THERMOPLASTIC PAVEMENT MARKING CHARACTER (90 MILS)	56	EA
4725000000-E	1205	THERMOPLASTIC PAVEMENT MARKING SYMBOL (90 MILS)	225	EA
4890000000-E	SP	YIELD LINE THERMOPLASTIC PAVEMENT MARKING, 24″, 90 MILS	35	LF
4895000000-N	SP	INLAID CRADLE PAVEMENT MARKERS	1,173	EA

TRANSYSTEMS
1 Glenwood Avenue
Raleigh, NC 27603
Tel:919.789.9977
Fax:919.789.9591
License: F-0453

PAVEMENT MARKING SCHEDULE & SUMMARY OF QUANTITIES

7/11/2025
10:04:07 AM
...\Proj\Office\PMP\PMP-2.dgn
USER: bauman

TIP NO.	SHEET NO.
U-5875	PMP-3

APPROVED: DocuSigned by: John Bauman 7FFD5B4C37984D1...

DATE: 9/10/2025

SEAL

NORTH CAROLINA PROFESSIONAL SEAL 052428 ENGINEER JOHN BAUMAN

DOCUMENT NOT CONSIDERED FINAL UNLESS ALL SIGNATURES COMPLETED

GENERAL NOTES

THE FOLLOWING GENERAL NOTES APPLY AT ALL TIMES FOR THE DURATION OF THE CONSTRUCTION PROJECT, EXCEPT WHEN OTHERWISE NOTED IN THE PLAN, OR DIRECTED BY THE ENGINEER.

A) INSTALL PAVEMENT MARKINGS AND PAVEMENT MARKERS ON THE FINAL SURFACE AS FOLLOWS:

ROAD NAME	MARKING	MARKER
SR 1203(ALLEN RD.)	THERMOPLASTIC	SNOWPLOWABLE
SR 1467(STANTONSBURG RD.)	THERMOPLASTIC	SNOWPLOWABLE
US 13(DICKINSON AVENUE EXTENSION)	THERMOPLASTIC	SNOWPLOWABLE

B) TIE PROPOSED PAVEMENT MARKING LINES TO EXISTING PAVEMENT MARKING LINES.

C) REMOVE/REPLACE ANY CONFLICTING/DAMAGED PAVEMENT MARKINGS AND MARKERS.

D) STOP BAR LOCATION AT NON-SIGNALIZED INTERSECTIONS MAY BE ADJUSTED AS DIRECTED BY THE ENGINEER.

E) UNLESS OTHERWISE SPECIFIED, HEATED-IN-PLACE THERMOPLASTIC MAY BE USED IN LIEU OF EXTRUDED THERMOPLASTIC FOR STOP BARS, SYMBOLS, CHARACTERS AND DIAGONALS. IF HEATED-IN-PLACE IS USED, IT SHALL BE PAID FOR USING THE EXTRUDED THERMOPLASTIC PAY ITEM.

F) ALL BICYCLE LANE SYMBOLS SHALL BE HEATED-IN-PLACE THERMOPLASTIC. SYMBOLS SHALL BE PAID FOR USING THE HEATED-IN-PLACE PAY ITEM.

G) CAST IRON MARKERS ARE NOT ALLOWED TO BE USED FOR PAVEMENT MARKERS.

ROADWAY STANDARD DRAWINGS

THE FOLLOWING ROADWAY STANDARDS AS APPEAR IN "ROADWAY STANDARD DRAWINGS" N.C. DEPARTMENT OF TRANSPORTATION - RALEIGH, N.C., DATED JANUARY 2024 ARE APPLICABLE TO THIS PROJECT AND BY REFERENCE HEREBY ARE CONSIDERED A PART OF THESE PLANS:

STD. NO.	TITLE
1205.01	PAVEMENT MARKINGS - LINE TYPES AND OFFSETS
1205.02	PAVEMENT MARKINGS - TWO-LANE AND MULTILANE ROADWAYS
1205.04	PAVEMENT MARKINGS - INTERSECTIONS
1205.05	PAVEMENT MARKINGS - TURN LANES
1205.06	PAVEMENT MARKINGS - LANE DROPS
1205.07	PAVEMENT MARKINGS - PEDESTRIAN CROSSWALKS
1205.08	PAVEMENT MARKINGS - SYMBOLS AND WORD MESSAGES
1205.09	PAVEMENT MARKINGS - PAINTED ISLANDS
1205.11	PAVEMENT MARKINGS - RAILROAD CROSSINGS
1205.15	PAVEMENT MARKINGS - SUPERSTREETS
1205.16	PAVEMENT MARKINGS - BICYCLE FACILITIES
1250.01	RAISED PAVEMENT MARKERS - INSTALLATION SPACING
1251.01	RAISED PAVEMENT MARKERS - PERMANENT AND TEMPORARY

TRANSYSTEMS
1 Glenwood Avenue
Raleigh, NC 27603
Tel:919.789.9977
Fax:919.789.9591
License: F-0453

GENERAL NOTES AND ROADWAY STANDARD DRAWINGS

7/28/2025
R:\Traffic\PMP\PMP-3.dgn
USER: bauman

TIP NO.	SHEET NO.
U-5875	PMP-4

APPROVED: DocuSigned by: John Bauman 7FFD5B4C37984D1...

DATE: 9/10/2025

SEAL

NORTH CAROLINA PROFESSIONAL SEAL 052428 ENGINEER JOHN BAUMAN

DOCUMENT NOT CONSIDERED FINAL UNLESS ALL SIGNATURES COMPLETED

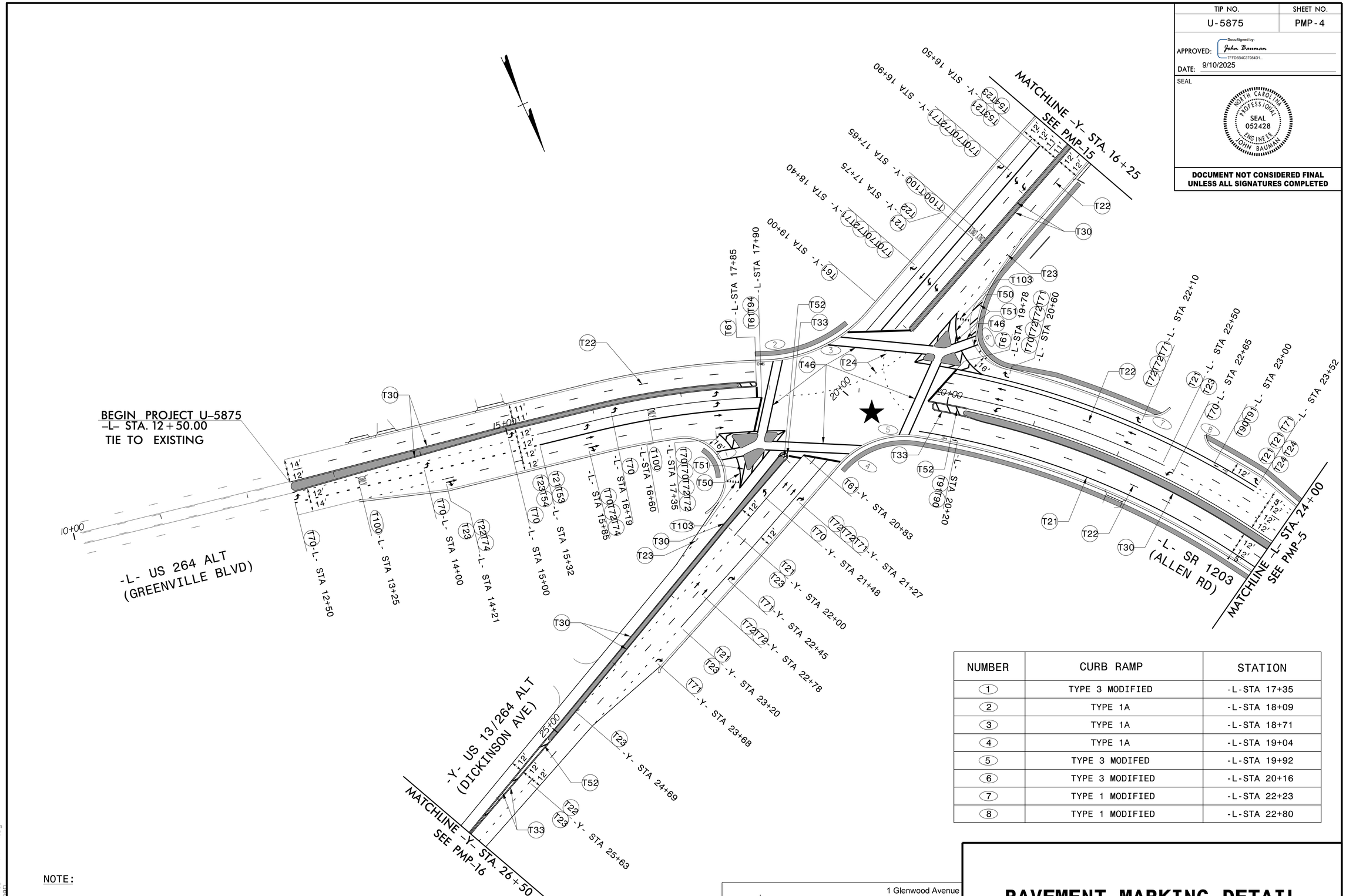

NUMBER	CURB RAMP	STATION
1	TYPE 3 MODIFIED	-L-STA 17+35
2	TYPE 1A	-L-STA 18+09
3	TYPE 1A	-L-STA 18+71
4	TYPE 1A	-L-STA 19+04
5	TYPE 3 MODIFED	-L-STA 19+92
6	TYPE 3 MODIFIED	-L-STA 20+16
7	TYPE 1 MODIFIED	-L-STA 22+23
8	TYPE 1 MODIFIED	-L-STA 22+80

NOTE:

★ SIGNALIZED INTERSECTION

TRANSYSTEMS
1 Glenwood Avenue
Raleigh, NC 27603
Tel:919.789.9977
Fax:919.789.9591
License: F-0453

PAVEMENT MARKING DETAIL

7/11/2025
U:\Projects\traffic\PMP\PMP-4.dgn
USER: jbauman

TIP NO.	SHEET NO.
U-5875	PMP-5

APPROVED: DocuSigned by: John Bauman 7FFD5B4C37984D1...

DATE: 9/10/2025

SEAL

NORTH CAROLINA PROFESSIONAL SEAL 052428 ENGINEER JOHN BAUMAN

DOCUMENT NOT CONSIDERED FINAL UNLESS ALL SIGNATURES COMPLETED

NUMBER	CURB RAMP	STATION
1	TYPE 1 MODIFIED	-L-STA 24+95
2	TYPE 1 MODIFIED	-L-STA 25+62
3	TYPE 3 MODIFIED	-L-STA 35+85
4	TYPE 1 MODIFIED	-L-STA 36+54

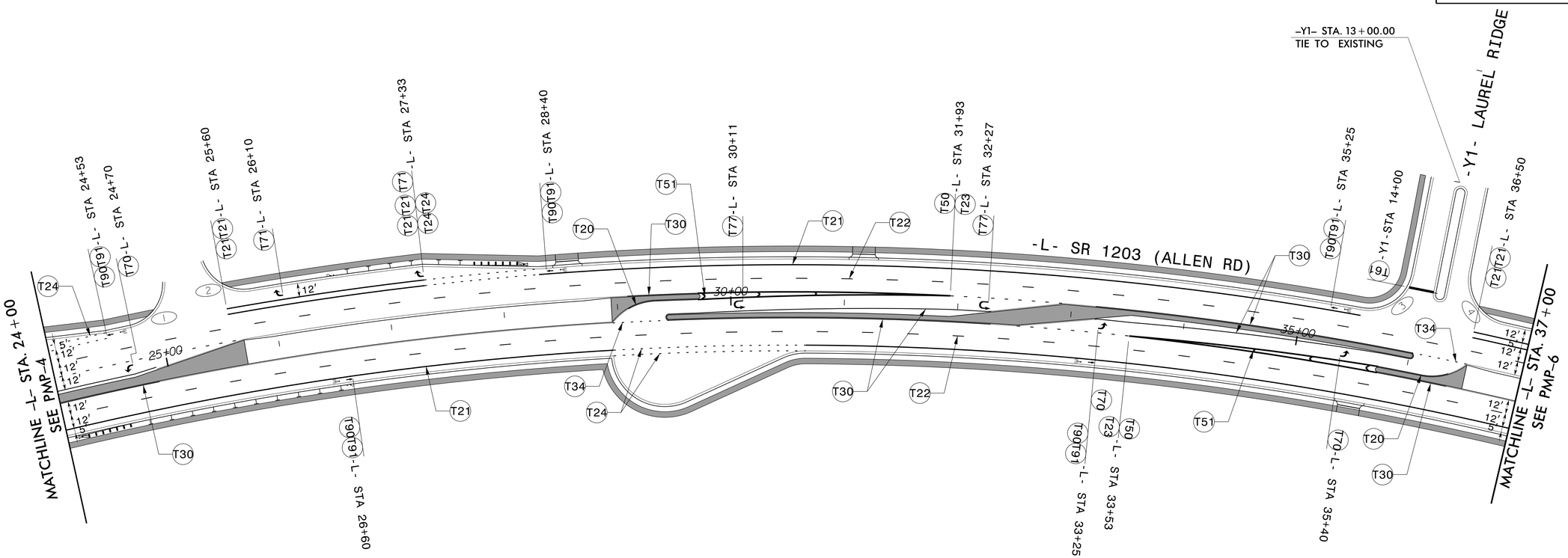

TRANSYSTEMS
1 Glenwood Avenue
Raleigh, NC 27603
Tel:919.789.9977
Fax:919.789.9591
License: F-0453

PAVEMENT MARKING DETAIL

7/28/2025
R:\Office\PMP\PMP-5.dgn
USER: bauman

TIP NO.	SHEET NO.
U-5875	PMP-6

APPROVED: DocuSigned by: John Bauman 7FFD5B4C37984D1...

DATE: 9/10/2025

SEAL

NORTH CAROLINA PROFESSIONAL SEAL 052428 ENGINEER JOHN BAUMAN

DOCUMENT NOT CONSIDERED FINAL UNLESS ALL SIGNATURES COMPLETED

NUMBER	CURB RAMP	STATION
1	TYPE 1 MODIFIED	-L-STA 45+03
2	TYPE 1 MODIFIED	-L-STA 45+60

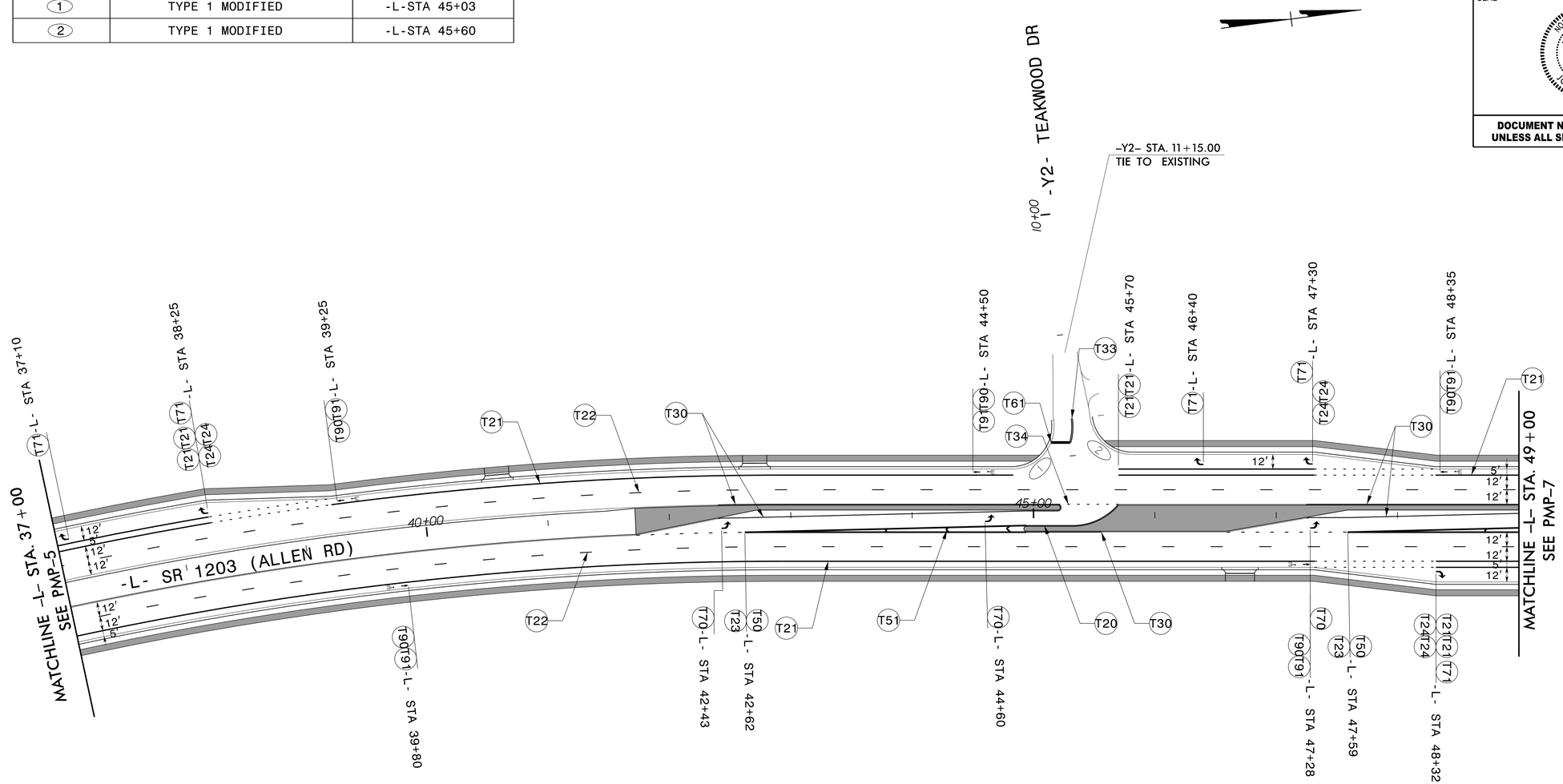

TRANSYSTEMS
1 Glenwood Avenue
Raleigh, NC 27603
Tel:919.789.9977
Fax:919.789.9591
License: F-0453

PAVEMENT MARKING DETAIL

USER: tbaumann
7/18/2025 5:20:21 PM
pmp-6.dgn

NUMBER	CURB RAMP	STATION
1	TYPE 3 MODIFIED	-L-STA 50+05
2	TYPE 3 MODIFIED	-L-STA 50+18
3	TYPE 3 MODIFIED	-L-STA 50+82
4	TYPE 3 MODIFIED	-L-STA 50+87
5	TYPE 1 MODIFIED	-L-STA 57+51
6	TYPE 1 MODIFIED	-L-STA 57+95
7	TYPE 1 MODIFIED	-L-STA 60+57
8	TYPE 1 MODIFIED	-L-STA 61+25
9	TYPE 1 MODIFIED	-Y4-STA 11+27

TIP NO.	SHEET NO.
U-5875	PMP-7

APPROVED: DocuSigned by: John Bauman 7FFD5B4C37984D1...

DATE: 9/10/2025

SEAL

NORTH CAROLINA PROFESSIONAL SEAL 052428 ENGINEER JOHN BAUMAN

DOCUMENT NOT CONSIDERED FINAL UNLESS ALL SIGNATURES COMPLETED

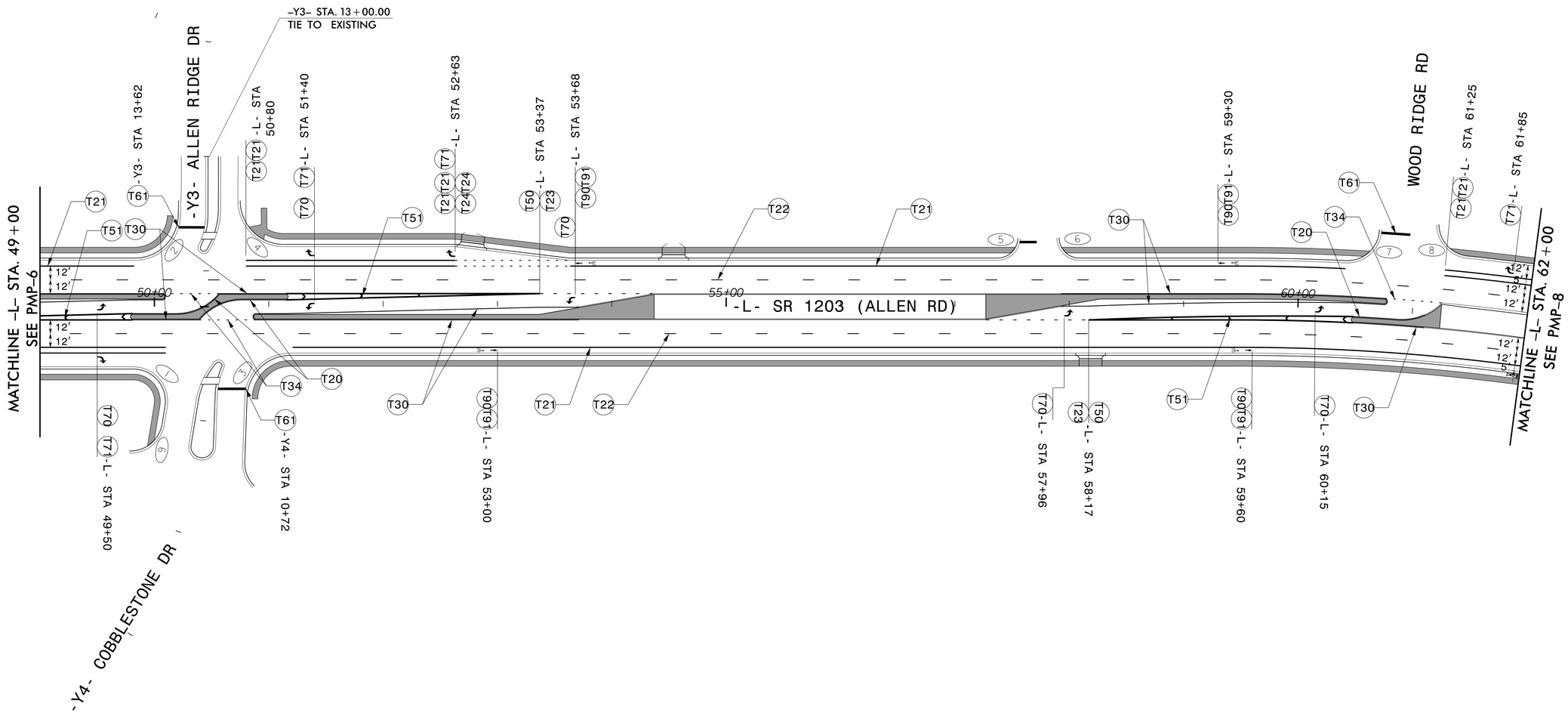

TRANSYSTEMS

1 Glenwood Avenue
Raleigh, NC 27603
Tel:919.789.9977
Fax:919.789.9591
License: F-0453

PAVEMENT MARKING DETAIL

7/11/2025
USER: bauman

TIP NO.	SHEET NO.
U-5875	PMP-8

APPROVED: DocuSigned by: John Bauman 7FFD5B4C37984D1...

DATE: 9/10/2025

SEAL

NORTH CAROLINA PROFESSIONAL SEAL 052428 ENGINEER JOHN BAUMAN

DOCUMENT NOT CONSIDERED FINAL UNLESS ALL SIGNATURES COMPLETED

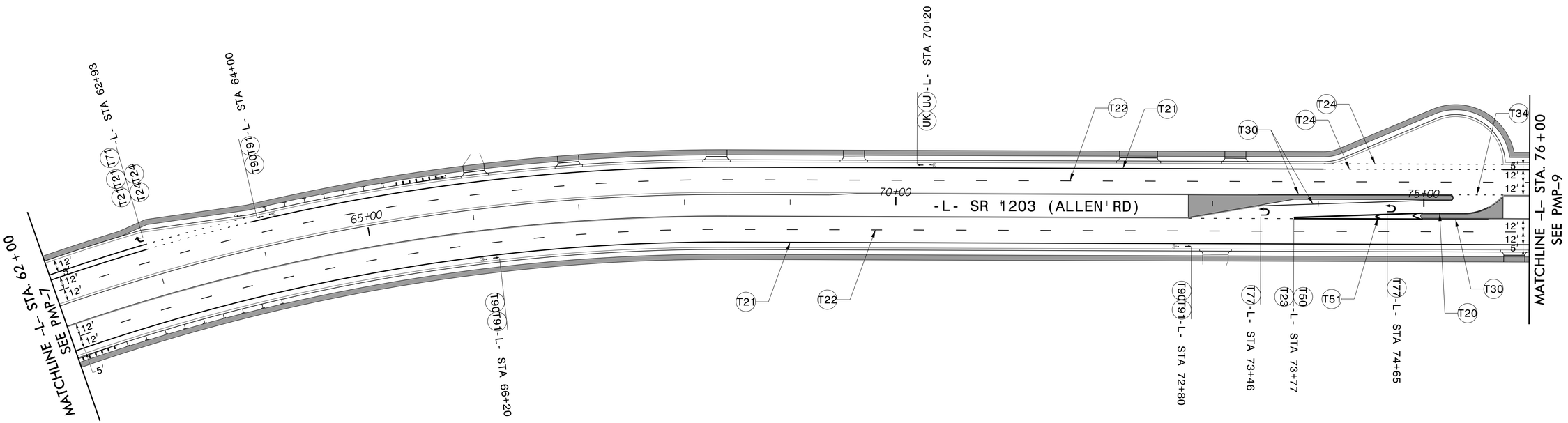

TRANSYSTEMS
1 Glenwood Avenue
Raleigh, NC 27603
Tel:919.789.9977
Fax:919.789.9591
License: F-0453

PAVEMENT MARKING DETAIL

7/1/2025
12:04:
Office\PMP\PMP-8.dgn
USER: bauman

TIP NO.	SHEET NO.
U-5875	PMP-9

APPROVED: DocuSigned by: John Bauman 7FFD5B4C37984D1...

DATE: 9/10/2025

SEAL

NORTH CAROLINA PROFESSIONAL SEAL 052428 ENGINEER JOHN BAUMAN

DOCUMENT NOT CONSIDERED FINAL UNLESS ALL SIGNATURES COMPLETED

NUMBER	CURB RAMP	STATION
1	TYPE 3 MODIFIED	-L-STA 85+52
2	TYPE 1A	-L-STA 86+17
3	TYPE 3 MODIFIED	-L-STA 85+52
4	TYPE 3	-L-STA 86+17

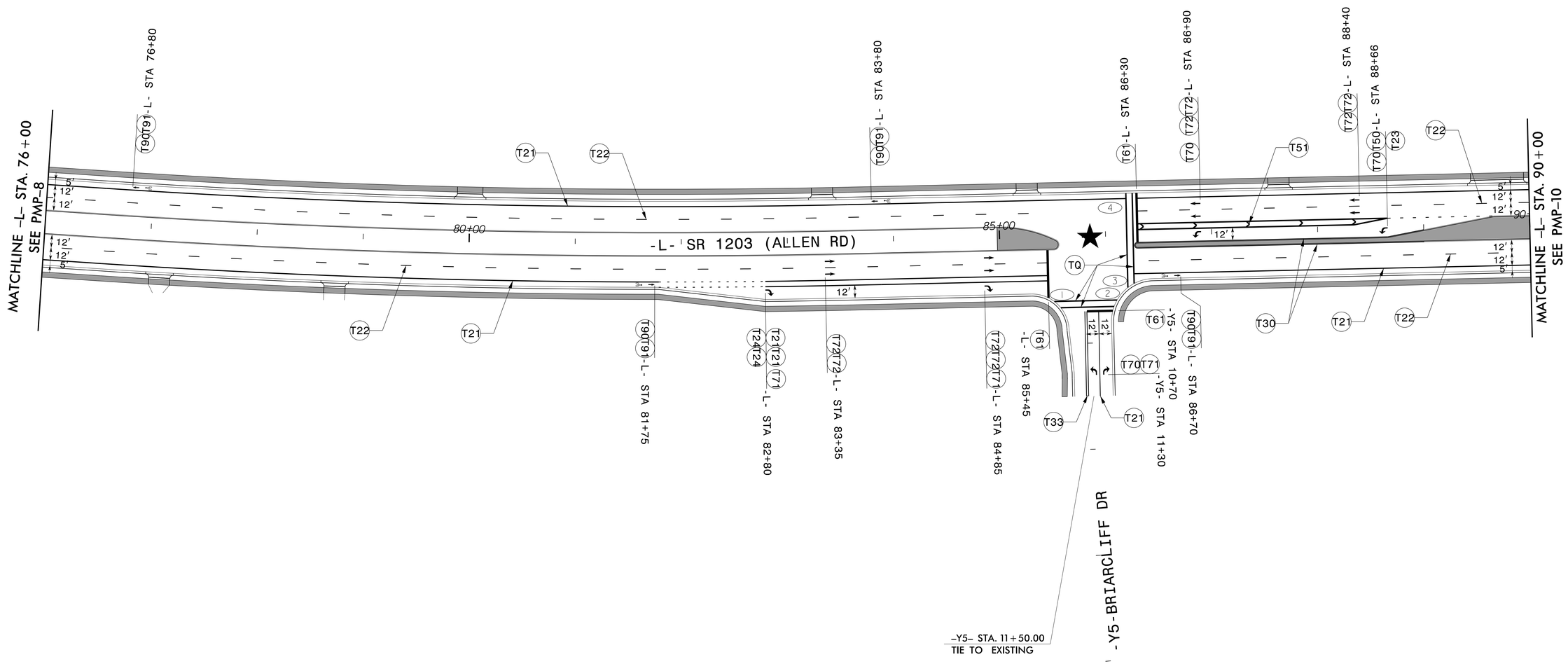

★ SIGNALIZED INTERSECTION

TRANSYSTEMS
1 Glenwood Avenue
Raleigh, NC 27603
Tel:919.789.9977
Fax:919.789.9591
License: F-0453

PAVEMENT MARKING DETAIL

7/11/2025
U:\Projects\Traffic\PMP\PMP-9.dgn
USER:jbauman

TIP NO.	SHEET NO.
U-5875	PMP-10

APPROVED: DocuSigned by: John Bauman 7FFD5B4C37984D1...

DATE: 9/10/2025

SEAL

NORTH CAROLINA PROFESSIONAL SEAL 052428 ENGINEER JOHN BAUMAN

DOCUMENT NOT CONSIDERED FINAL UNLESS ALL SIGNATURES COMPLETED

NUMBER	CURB RAMP	STATION
1	TYPE 1 MODIFIED	-L-STA 102+41

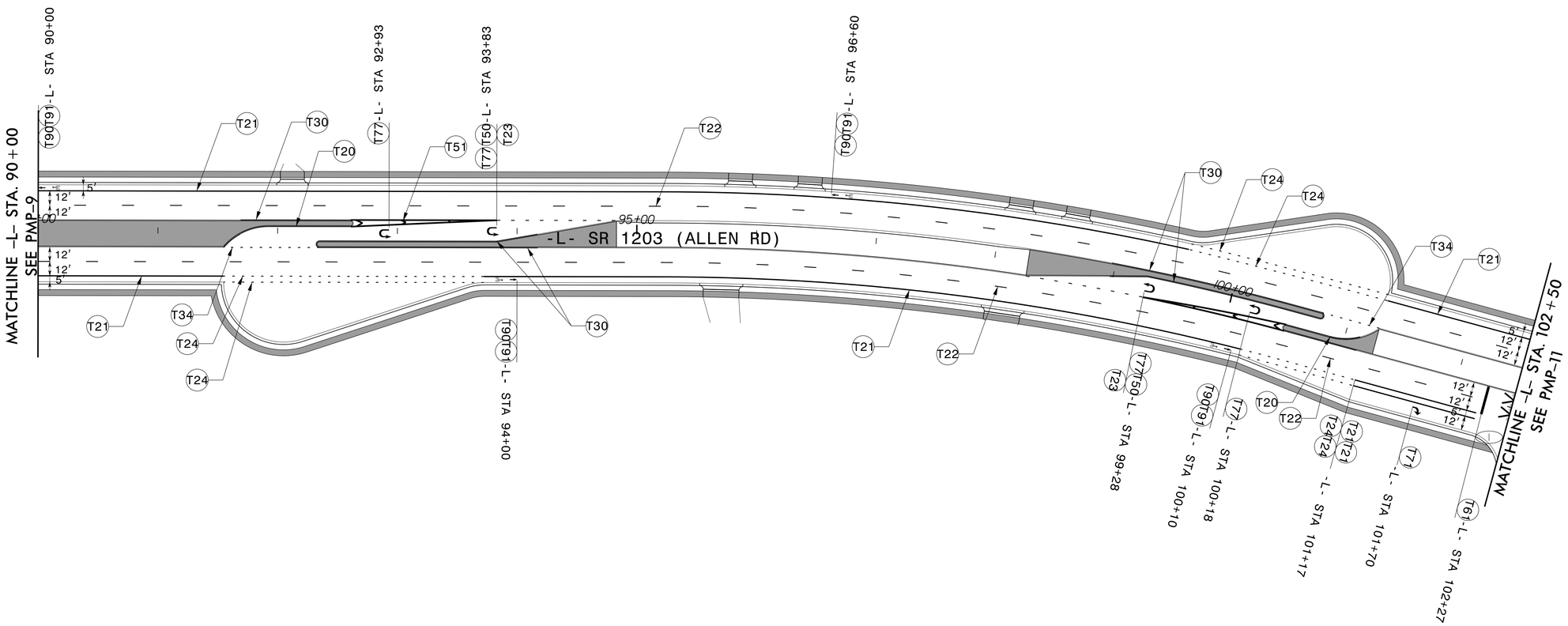

TRANSYSTEMS

1 Glenwood Avenue
Raleigh, NC 27603
Tel:919.789.9977
Fax:919.789.9591
License: F-0453

PAVEMENT MARKING DETAIL

7/11/2025
r:\traffic\PMP\PMP-10.dgn
USER:bbauman

TIP NO.	SHEET NO.
U-5875	PMP-11

APPROVED: DocuSigned by: John Bauman 7FFD5B4C37984D1...

DATE: 9/10/2025

SEAL

NORTH CAROLINA PROFESSIONAL SEAL 052428 ENGINEER JOHN BAUMAN

DOCUMENT NOT CONSIDERED FINAL UNLESS ALL SIGNATURES COMPLETED

NUMBER	CURB RAMP	STATION
1	TYPE 1A	-L-STA 102+96
2	TYPE 1A	-Y7-STA 17+32
3	TYPE 1A	-Y7-STA 17+32

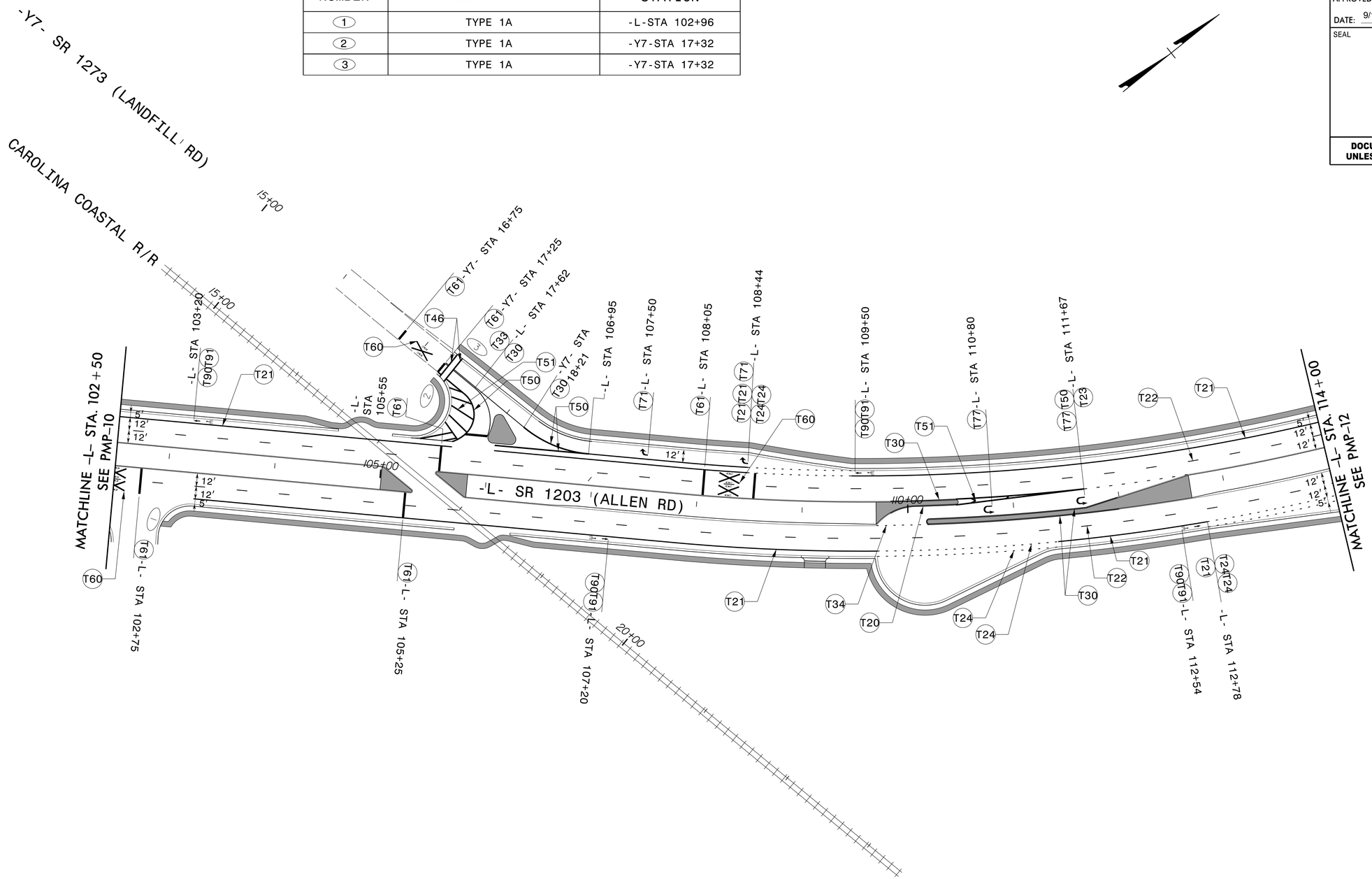

TRANSYSTEMS

1 Glenwood Avenue
Raleigh, NC 27603
Tel:919.789.9977
Fax:919.789.9591
License: F-0453

PAVEMENT MARKING DETAIL

usr: jbauman
file: U5875_PMP\PMP-11.dgn
9/10/2025

TIP NO.	SHEET NO.
U-5875	PMP-12

APPROVED: DocuSigned by: John Bauman 7FFD5B4C37984D1...

DATE: 9/10/2025

SEAL

NORTH CAROLINA PROFESSIONAL SEAL 052428 ENGINEER JOHN BAUMAN

DOCUMENT NOT CONSIDERED FINAL UNLESS ALL SIGNATURES COMPLETED

NUMBER	CURB RAMP	STATION
1	TYPE 1 MODIFIED	-L-STA 115+55
2	TYPE 1 MODIFIED	-L-STA 115+74
3	TYPE 1A	-L-STA 116+10
4	TYPE 3 MODIFIED	-L-STA 116+19
5	TYPE 1 MODIFIED	-L-STA 121+87
6	TYPE 1A	-L-STA 122+17
7	TYPE 1 MODIFIED	-L-STA 123+51
8	TYPE 1 MODIFIED	-L-STA 124+08
9	TYPE 1 MODIFIED	-L-STA 126+02
10	TYPE 1 MODIFIED	-L-STA 126+47

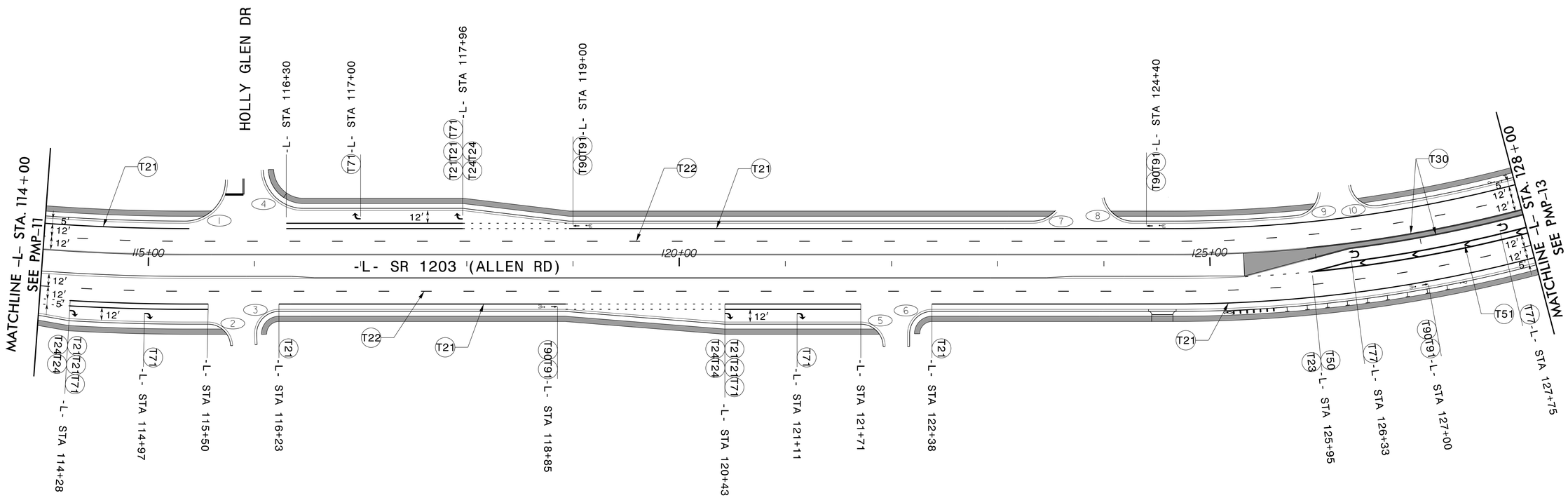

TRANSYSTEMS
1 Glenwood Avenue
Raleigh, NC 27603
Tel:919.789.9977
Fax:919.789.9591
License: F-0453

PAVEMENT MARKING DETAIL

7/11/2025
12:04:
U:\Projects\office\PMP\PMP-12.dgn
USER: bbauman

TIP NO.	SHEET NO.
U-5875	PMP-13

APPROVED: DocuSigned by: John Bauman 7FFD5B4C37984D1...

DATE: 9/10/2025

SEAL

NORTH CAROLINA PROFESSIONAL SEAL 052428 ENGINEER JOHN BAUMAN

DOCUMENT NOT CONSIDERED FINAL UNLESS ALL SIGNATURES COMPLETED

NUMBER	CURB RAMP	STATION
1	TYPE 1A	-L-STA 135+22
2	TYPE 1 MODIFIED	-L-STA 135+62

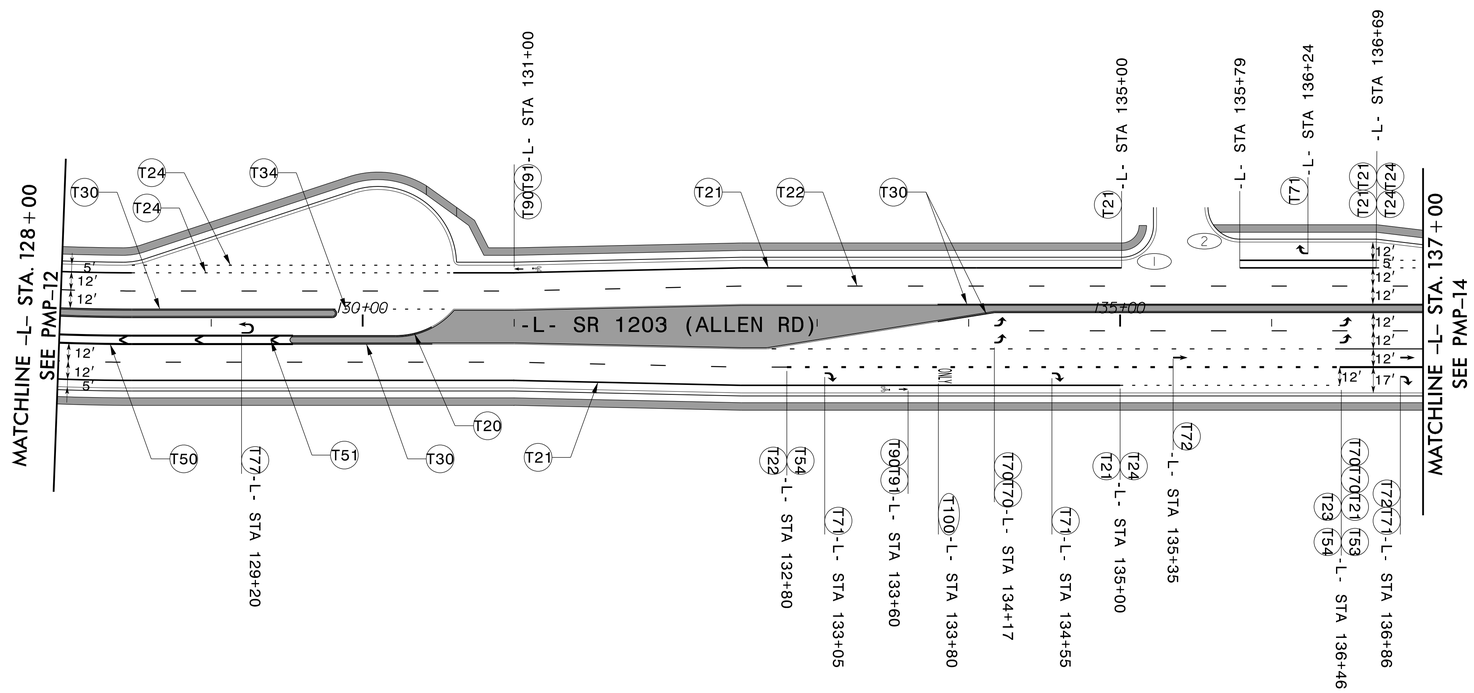

TRANSYSTEMS
1 Glenwood Avenue
Raleigh, NC 27603
Tel:919.789.9977
Fax:919.789.9591
License: F-0453

PAVEMENT MARKING DETAIL

7/11/2025
R:\Roadway\Proj\Office\PMP\PMP-13.dgn
USER: jbauman

TIP NO.	SHEET NO.
U-5875	PMP-14

APPROVED: DocuSigned by: John Bauman 7FFD5B4C37984D1...

DATE: 9/10/2025

SEAL

NORTH CAROLINA PROFESSIONAL SEAL 052428 ENGINEER JOHN BAUMAN

DOCUMENT NOT CONSIDERED FINAL UNLESS ALL SIGNATURES COMPLETED

NUMBER	CURB RAMP	STATION
1	TYPE 3 MODIFIED	-L-STA 138+96
2	TYPE 3 MODIFIED	-L-STA 139+08
3	TYPE 3 MODIFIED	-L-STA 139+10
4	TYPE 3 MODIFIED	-L-STA 139+22
5	TYPE 3 MODIFIED	-L2-STA 10+20
6	TYPE 1A	-L2-STA 10+37
7	TYPE 1A	-L2-STA 10+51
8	TYPE 3 MODIFIED	-L2-STA 10+58
9	TYPE 1 MODIFIED	-L2-STA 11+80

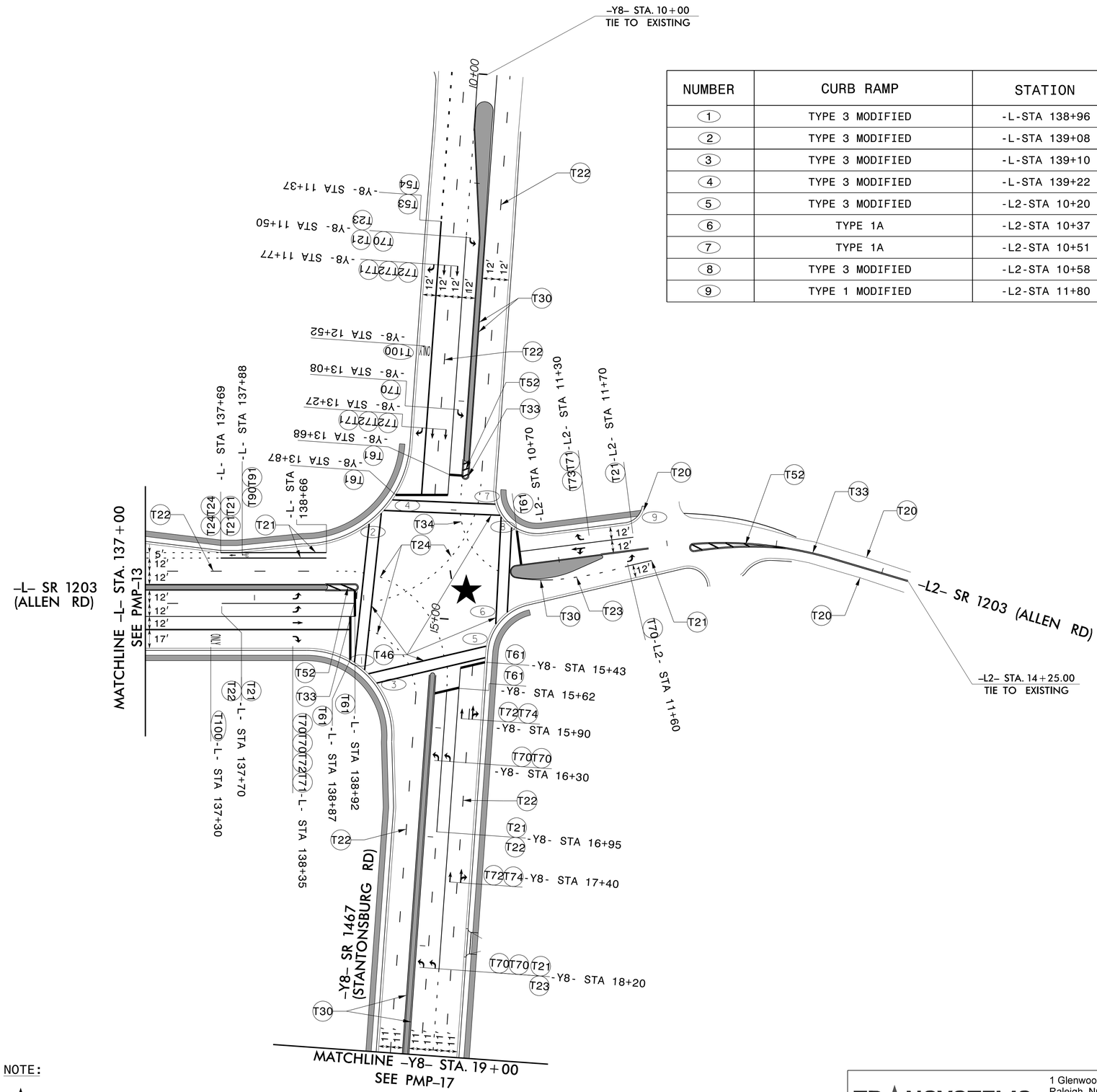

NOTE:

★ SIGNALIZED INTERSECTION

TRANSYSTEMS
1 Glenwood Avenue
Raleigh, NC 27603
Tel:919.789.9977
Fax:919.789.9591
License: F-0453

PAVEMENT MARKING DETAIL

7/11/2025
R:\Traffic\PMP\PMP-14.dgn
USER: jbauman

TIP NO.	SHEET NO.
U-5875	PMP-15

APPROVED: DocuSigned by: John Bauman 7FFD5B4C37984D1...

DATE: 9/10/2025

SEAL

NORTH CAROLINA PROFESSIONAL SEAL 052428 ENGINEER JOHN BAUMAN

DOCUMENT NOT CONSIDERED FINAL UNLESS ALL SIGNATURES COMPLETED

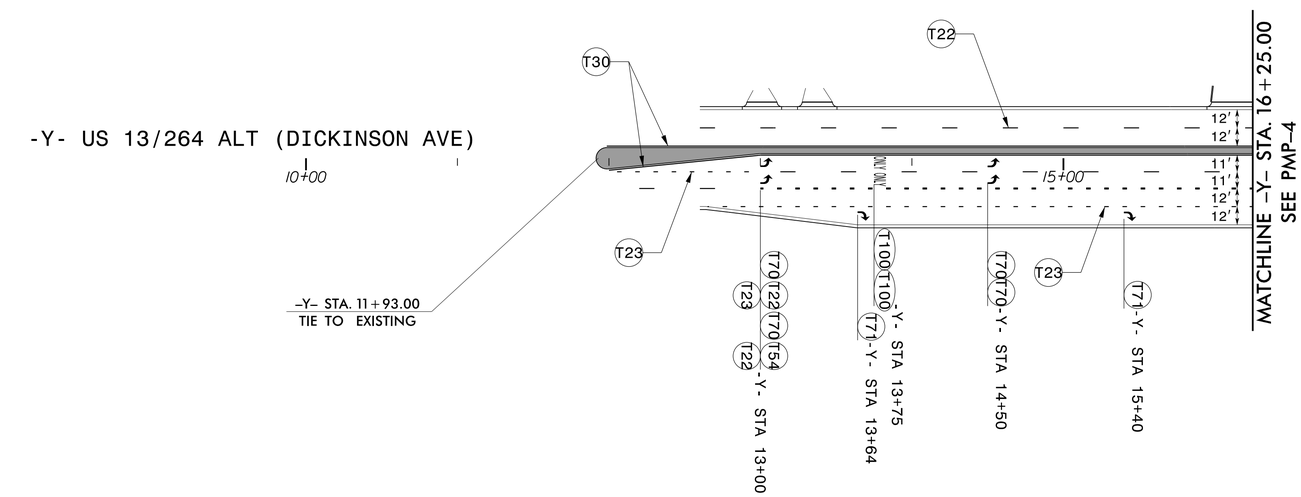

TRANSYSTEMS
1 Glenwood Avenue
Raleigh, NC 27603
Tel:919.789.9977
Fax:919.789.9591
License: F-0453

PAVEMENT MARKING DETAIL

7/11/2025
R:\Traffic\PMP\PMP-15.dgn
USER: bauman

TIP NO.	SHEET NO.
U-5875	PMP-16

APPROVED: DocuSigned by: John Bauman 7FFD5B4C37984D1...

DATE: 9/10/2025

SEAL

NORTH CAROLINA PROFESSIONAL SEAL 052428 ENGINEER JOHN BAUMAN

DOCUMENT NOT CONSIDERED FINAL UNLESS ALL SIGNATURES COMPLETED

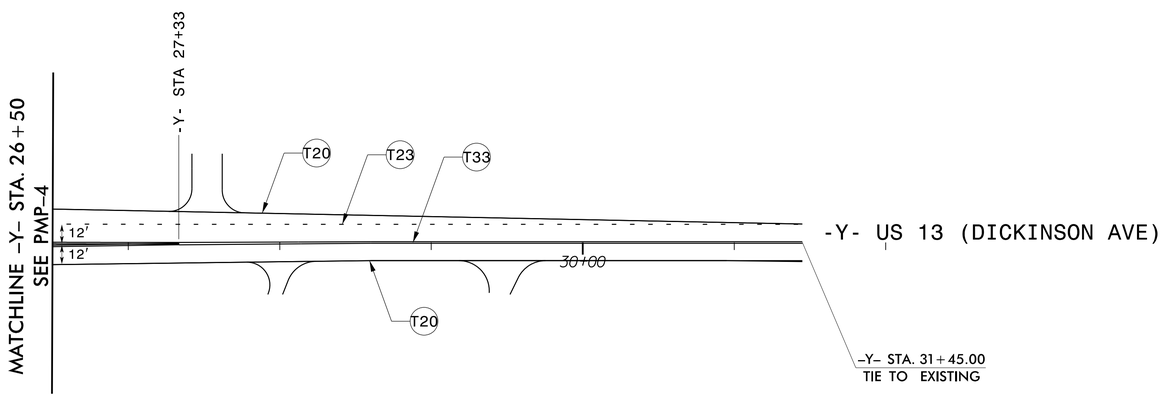

TRANSYSTEMS
1 Glenwood Avenue
Raleigh, NC 27603
Tel:919.789.9977
Fax:919.789.9591
License: F-0453

PAVEMENT MARKING DETAIL

7/11/2025 2:29:17 PM
pmp-16.dgn

TIP NO.	SHEET NO.
U-5875	PMP-17

APPROVED: DocuSigned by: John Bauman 7FFD5B4C37984D1...

DATE: 9/10/2025

SEAL

NORTH CAROLINA PROFESSIONAL SEAL 052428 ENGINEER JOHN BAUMAN

DOCUMENT NOT CONSIDERED FINAL UNLESS ALL SIGNATURES COMPLETED

NUMBER	CURB RAMP	STATION
1	TYPE 4A	-Y8-STA 25+33
2	TYPE 4A	-Y8-STA 25+52
3	TYPE 4A	-Y8-STA 26+08

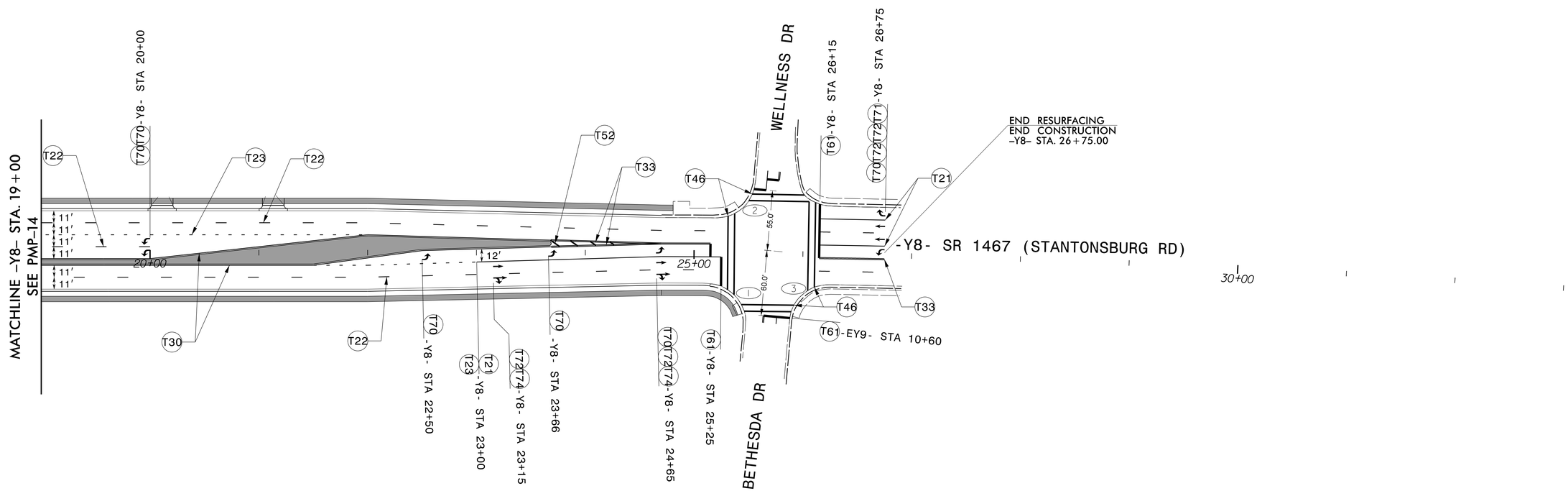

TRANSYSTEMS
1 Glenwood Avenue
Raleigh, NC 27603
Tel:919.789.9977
Fax:919.789.9591
License: F-0453

PAVEMENT MARKING DETAIL

7/11/2025
12:25
U:\Office\PMP\PMP-17.dgn
USER: bauman