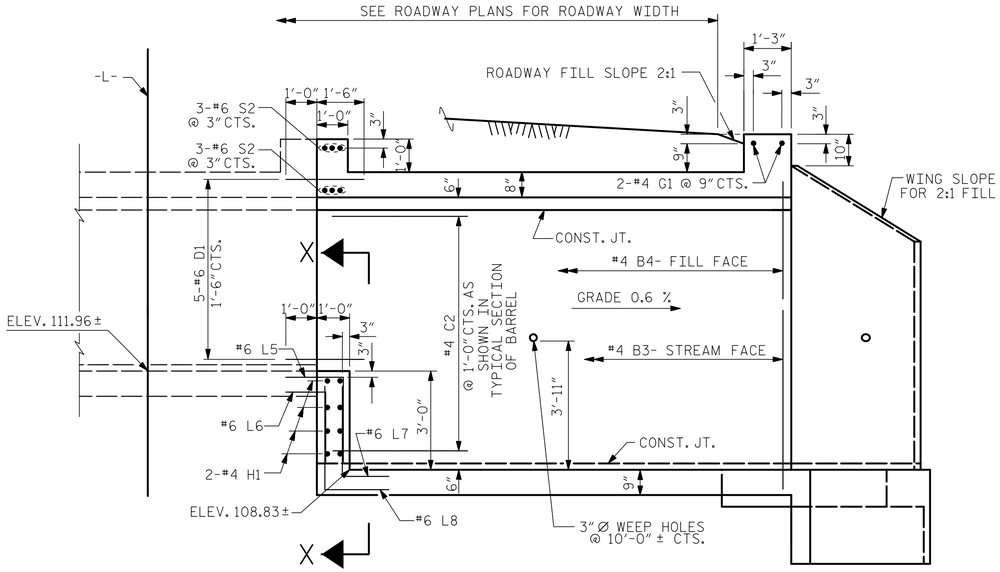

CULVERT SECTION NORMAL TO ROADWAY

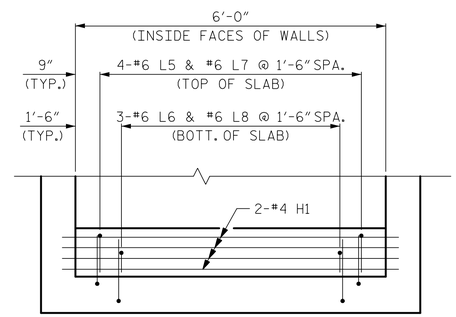

SECTION X-X

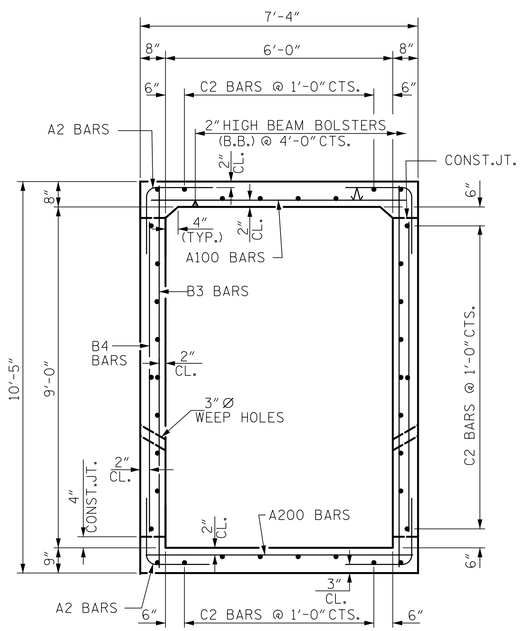

RIGHT ANGLE SECTION OF BARREL

THERE ARE 36 "C" BARS IN SECTION OF BARREL

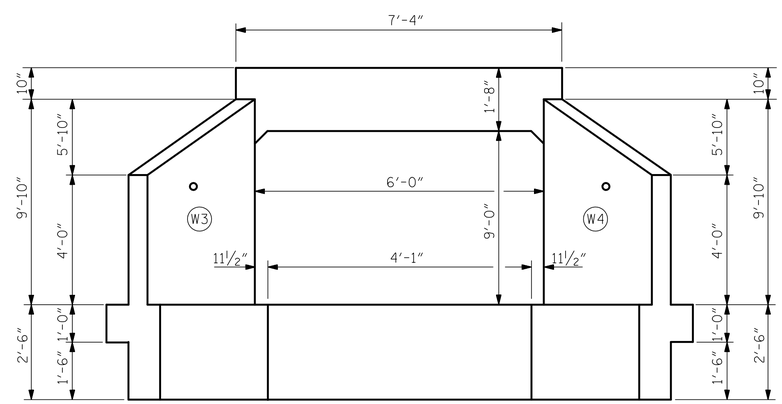

OUTLET END ELEVATION

BAR TYPE

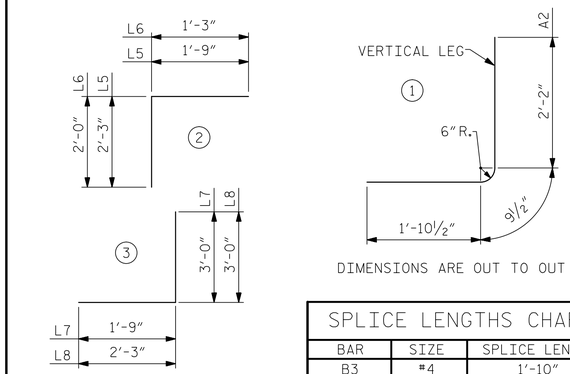

SPLICE LENGTHS CHART

BAR	SIZE	SPLICE LENGTH
B3	#4	1'-10"
"C"	#4	1'-10"

RIGHT EXTENSION BAR SCHEDULE

BAR	NO.	SIZE	TYPE	LENGTH	WEIGHT
A100	16	#4	STR	7'-0"	75
A101	1	#4	STR	5'-3"	4
A102	1	#4	STR	1'-11"	1
A200	16	#4	STR	7'-0"	75
A201	1	#4	STR	5'-3"	4
A202	1	#4	STR	1'-11"	1
A2	68	#4	1	4'-10"	220
B3	34	#4	STR	9'-6"	216
B4	34	#4	STR	9'-0"	204
C2	72	#4	STR	6'-3"	301
D1	15	#6	STR	2'-6"	56
D2	3	#6	STR	1'-4"	6
G1	2	#4	STR	7'-0"	9
H1	8	#4	STR	7'-0"	37
L5	4	#6	2	4'-0"	24
L6	3	#6	2	3'-3"	15
L7	4	#6	3	4'-9"	29
L8	3	#6	3	5'-3"	24
S2	6	#6	STR	7'-0"	63
REINFORCING STEEL					1364 LBS

RIGHT EXTENSION QUANTITIES

CLASS A CONCRETE			
BARREL @ 0.833 CY/FT	8.5	C.Y.	
WINGS, ETC.	13.7	C.Y.	
EDGE BEAM	0.3	C.Y.	
BOTTOM SLAB STEP	1.0	C.Y.	
TOTAL	23.5	C.Y.	
REINFORCING STEEL			
BARREL	1,364	LBS.	
WINGS, ETC.	891	LBS.	
TOTAL	2,255	LBS.	
CULVERT EXCAVATION	LUMP SUM		
FOUNDATION COND. MAT'L.	8 TONS		

PROJECT NO. R-5739
NORTHAMPTON COUNTY
STATION: 529+01.60 -L-

SHEET 8 OF 12

NORTH CAROLINA PROFESSIONAL SEAL 20125 ENGINEER MARSHALL G. CHECK, JR.
5FBCC2F3A4DC413...
7/23/2025

DOCUMENT NOT CONSIDERED FINAL UNLESS ALL SIGNATURES COMPLETED

TGS ENGINEERS
706 HILLSBOROUGH STREET
SUITE 200
RALEIGH, NC 27603
PH (919) 773-8887
CORP. LICENSE NO.: C-0275

STATE OF NORTH CAROLINA
DEPARTMENT OF TRANSPORTATION
RALEIGH

SINGLE 6 FT. X 9 FT.
CONCRETE BOX CULVERT
100° SKEW
RIGHT EXTENSION

REVISIONS						SHEET NO.
NO.	BY:	DATE:	NO.	BY:	DATE:	C7-8
1			3			TOTAL SHEETS
2			4			12

STR. #7

DRAWN BY :	ZCS	DATE :	8/22
CHECKED BY :	MGC	DATE :	1/23
DESIGN ENGINEER OF RECORD:	ZCS	DATE :	1/23

11/29/2023
X:\NCDOT\R-5739\Structures\Str.#7 (529 + 01.60 -L-)\FinalPlans\DGNs\417_001_R-5739_SMU_C7-8.dgn
User:ZSmith