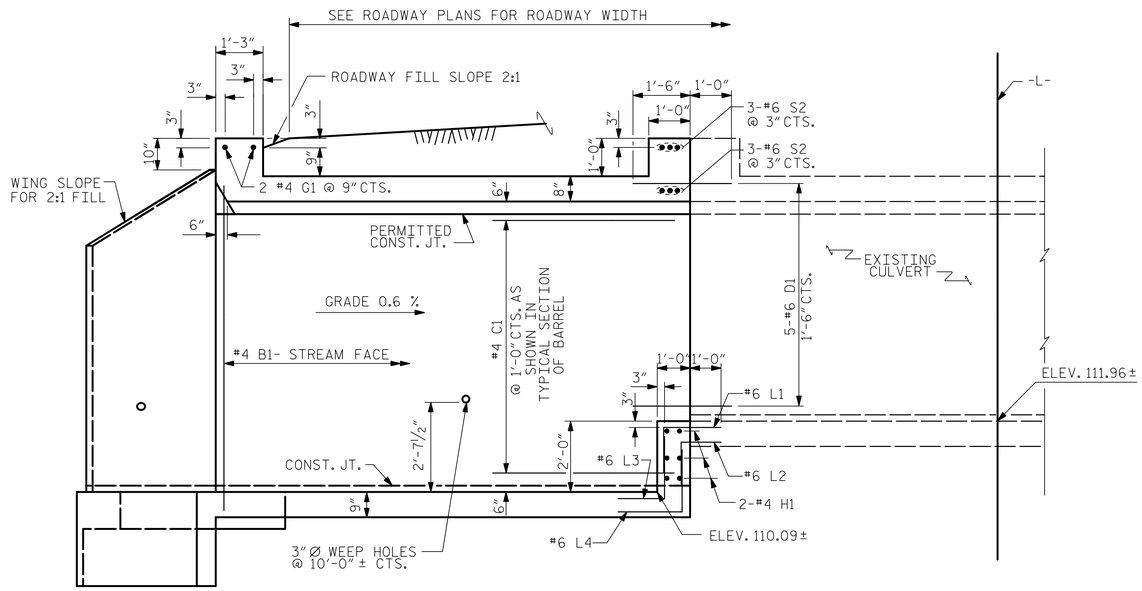

CULVERT SECTION NORMAL TO ROADWAY

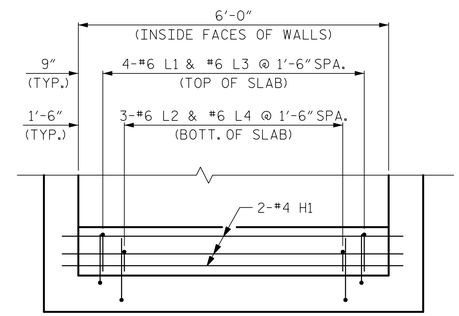

SECTION X-X

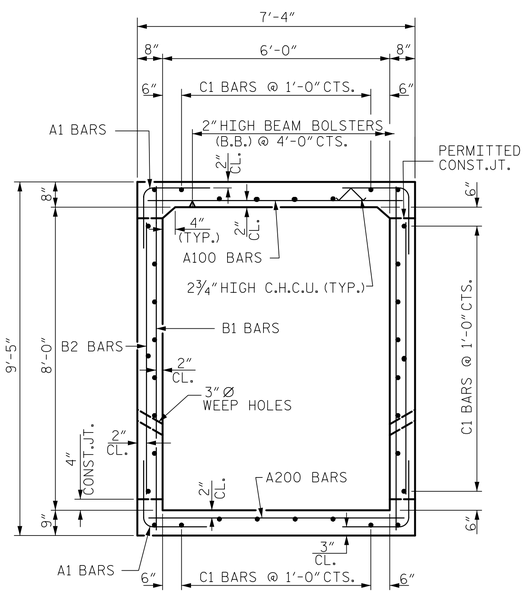

RIGHT ANGLE SECTION OF BARREL

THERE ARE 34 "C" BARS IN SECTION OF BARREL

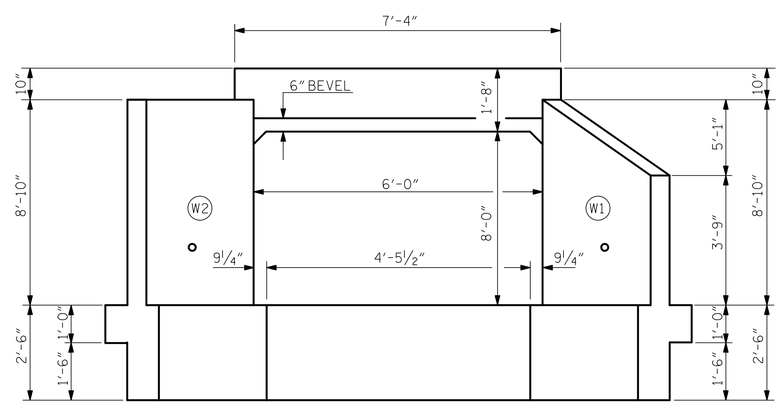

INLET END ELEVATION

BAR TYPE

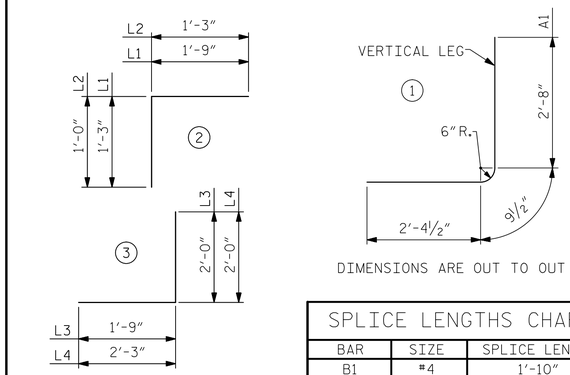

DIMENSIONS ARE OUT TO OUT

SPLICE LENGTHS CHART

BAR	SIZE	SPLICE LENGTH
B1	#4	1'-10"
"C"	#4	1'-10"

LEFT EXTENSION BAR SCHEDULE

BAR	NO.	SIZE	TYPE	LENGTH	WEIGHT
A100	19	#4	STR	7'-0"	89
A101	2	#4	STR	5'-9"	8
A102	4	#4	STR	4'-5"	12
A103	8	#4	STR	1'-7"	8
A104	1	#4	STR	5'-2"	3
A105	1	#4	STR	1'-10"	1
A200	19	#4	STR	7'-0"	89
A201	2	#4	STR	5'-9"	8
A202	4	#4	STR	4'-5"	12
A203	8	#4	STR	1'-7"	8
A204	1	#4	STR	5'-2"	3
A205	1	#4	STR	1'-10"	1
A1	52	#4	1	5'-10"	203
B1	26	#4	STR	9'-0"	156
B2	26	#4	STR	7'-3"	126
C1	68	#4	STR	9'-6"	432
D1	15	#6	STR	2'-6"	56
G1	2	#4	STR	7'-0"	9
H1	6	#4	STR	7'-0"	28
L1	4	#6	2	3'-0"	18
L2	3	#6	2	2'-3"	10
L3	4	#6	3	3'-9"	23
L4	3	#6	3	4'-3"	19
S2	6	#6	STR	7'-0"	63
REINFORCING STEEL					1385 LBS

LEFT EXTENSION QUANTITIES

CLASS A CONCRETE				
BARREL @	0.784	CY/FT	10.8	C.Y.
WINGS, ETC.			16.2	C.Y.
EDGE BEAM			0.3	C.Y.
BOTTOM SLAB STEP			0.6	C.Y.
TOTAL			27.9	C.Y.
REINFORCING STEEL				
BARREL			1,385	LBS.
WINGS, ETC.			1,126	LBS.
TOTAL			2,511	LBS.
CULVERT EXCAVATION			LUMP SUM	
FOUNDATION COND. MAT'L.			11 TONS	

PROJECT NO. R-5739

NORTHAMPTON COUNTY

STATION: 529+01.60 -L-

SHEET 6 OF 12

NORTH CAROLINA PROFESSIONAL SEAL 20125 ENGINEER MARSHALL G. CHECK, JR.

Marshall G. Check, Jr.

SFBCC2F3A4DC413...

7/23/2025

DOCUMENT NOT CONSIDERED FINAL UNLESS ALL SIGNATURES COMPLETED

TGS ENGINEERS
706 HILLSBOROUGH STREET
SUITE 200
RALEIGH, NC 27603
PH (919) 773-8887
CORP. LICENSE NO.: C-0275

STATE OF NORTH CAROLINA
DEPARTMENT OF TRANSPORTATION
RALEIGH

SINGLE 6 FT. X 8 FT.
CONCRETE BOX CULVERT
100° SKEW
LEFT EXTENSION

REVISIONS						
NO.	BY:	DATE:	NO.	BY:	DATE:	
1			3			
2			4			

SHEET NO. C7-6

TOTAL SHEETS 12

STR. #7

DRAWN BY :	ZCS	DATE :	8/22
CHECKED BY :	MGC	DATE :	1/23
DESIGN ENGINEER OF RECORD:	ZCS	DATE :	1/23

11/29/2023
X:\NCDOT\R-5739\Structures\Str.#7 (529 + 01.60 -L-)\FinalPlans\DGNs\417_001_R-5739_SMU_C7-6.dgn
User:ZSmith