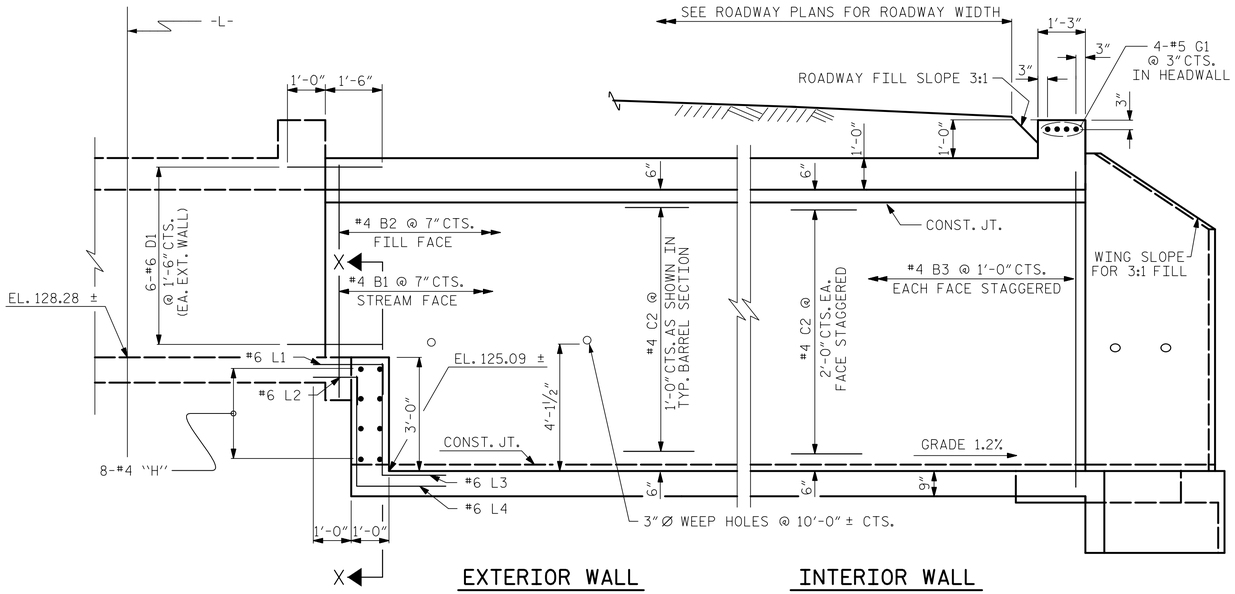

CULVERT EXTENSION SECTION NORMAL TO ROADWAY

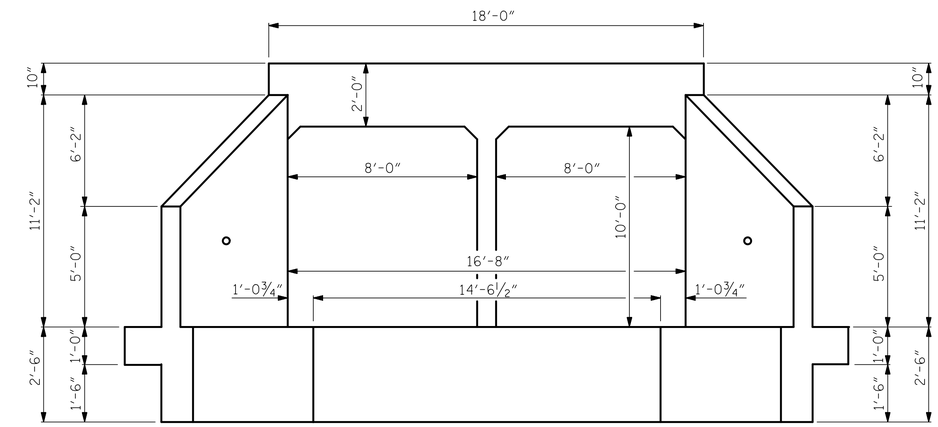

OUTLET END ELEVATION

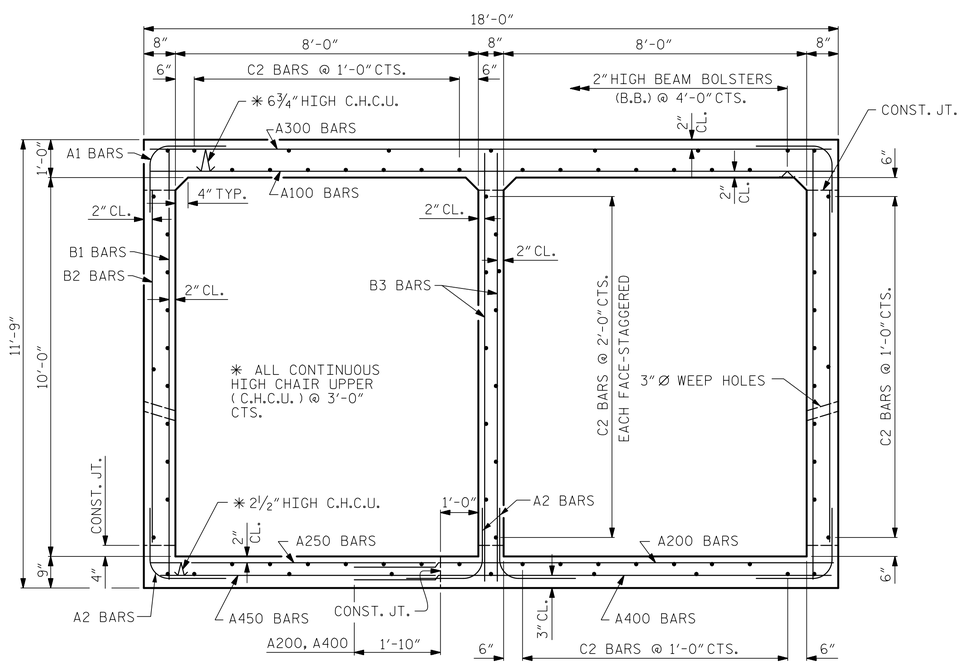

RIGHT ANGLE SECTION OF BARREL

THERE ARE 78 "C" BARS IN SECTION OF BARREL.
(LOOKING DOWNSTREAM)

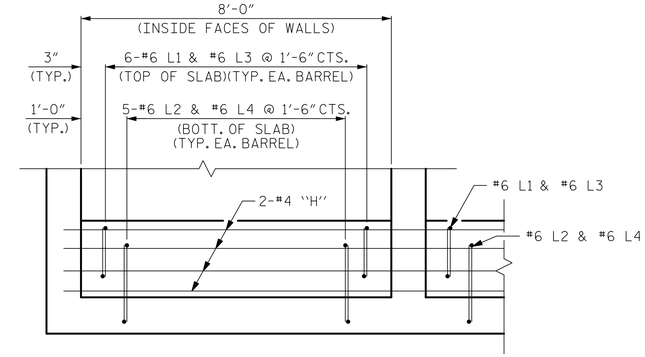

SECTION X-X

PROJECT NO. R-5739
NORTHAMPTON COUNTY
STATION: 499+65.60 -L-

SHEET 5 OF 9

NORTH CAROLINA PROFESSIONAL SEAL 20125 ENGINEER MARSHALL G. CHECK, JR.
Marshall G. Check, Jr.
5FBCC2F3A4DC413...
7/23/2025

DOCUMENT NOT CONSIDERED FINAL UNLESS ALL SIGNATURES COMPLETED

TGS ENGINEERS
706 HILLSBOROUGH STREET
SUITE 200
RALEIGH, NC 27603
PH (919) 773-8887
CORP. LICENSE NO.: C-0275

STATE OF NORTH CAROLINA
DEPARTMENT OF TRANSPORTATION
RALEIGH

DOUBLE 8 FT. X 10 FT.
CONCRETE BOX CULVERT
RIGHT EXTENSION
90° SKEW

REVISIONS							
NO.	BY:	DATE:	NO.	BY:	DATE:		
1			3				
2			4				

SHEET NO. C5-5
TOTAL SHEETS 9

STR. #5

ASSEMBLED BY :	STM	DATE :	08/22
CHECKED BY :	MGC	DATE :	01/23
DESIGN ENGINEER OF RECORD:	STM	DATE :	08/22

11/29/2023
X:\NCDOT\R-5739\Structures\Str. #5 (499 + 65.60 -L-)\FinalPlans\DGNs\R-5739_SMU_CU_STR 5_5.dgn
User:ZSmith