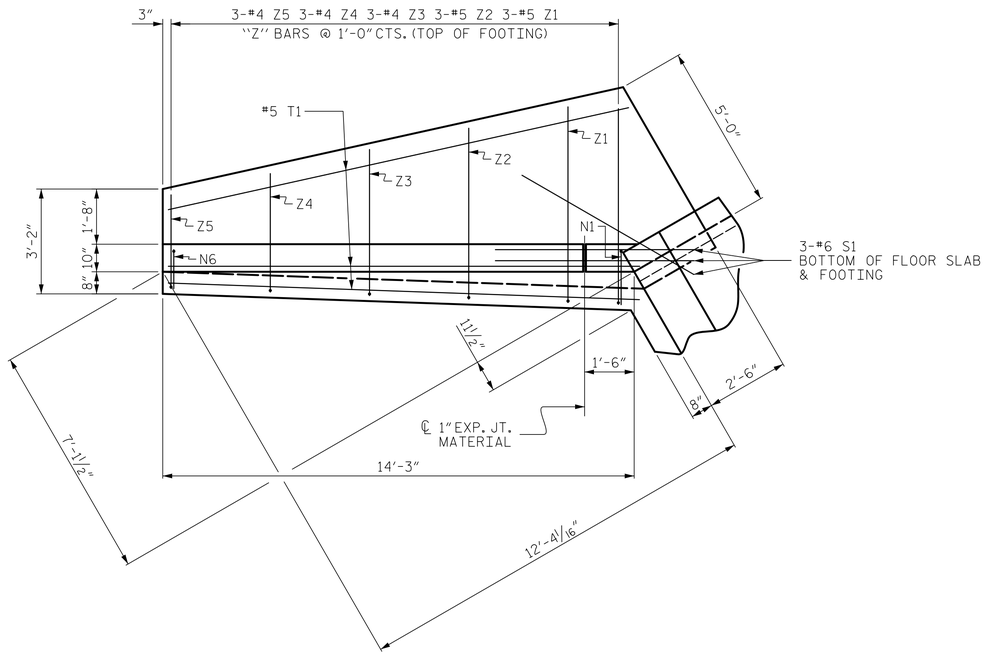

PLAN

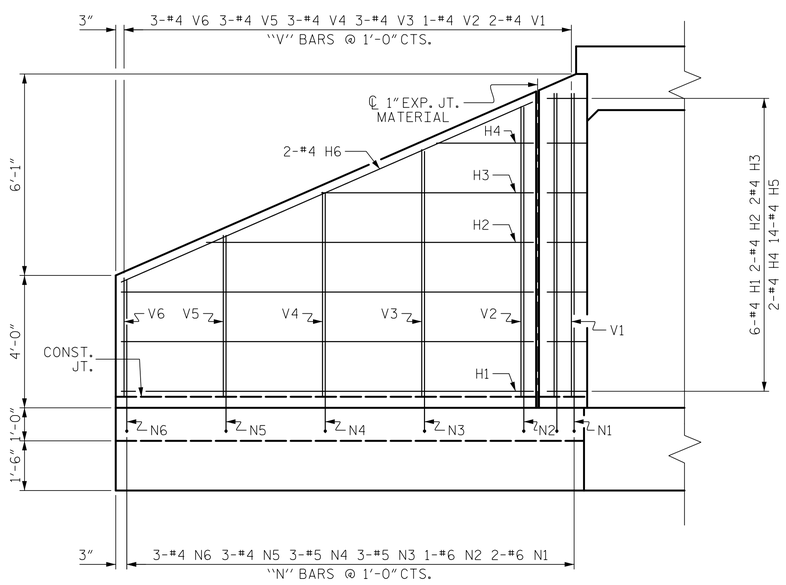

ELEVATION

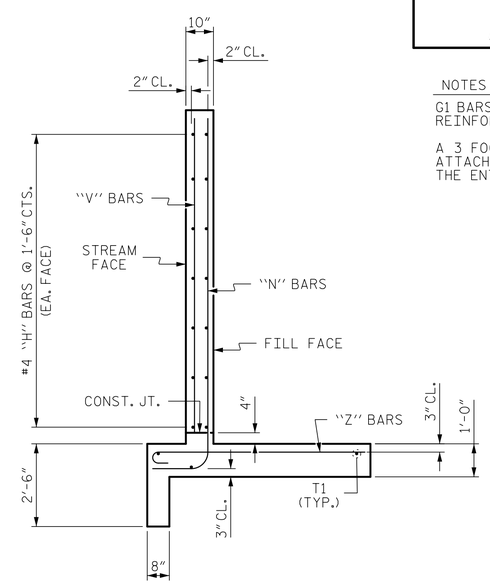

TYPICAL WING SECTION

BAR TYPES

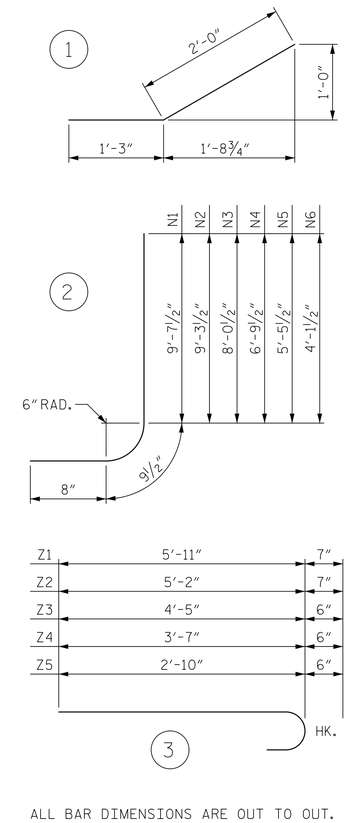

ALL BAR DIMENSIONS ARE OUT TO OUT.

BILL OF MATERIAL

BAR	NO.	SIZE	TYPE	LENGTH	WEIGHT
H1	12	#4	STR	12'-4"	99
H2	4	#4	STR	9'-10"	26
H3	4	#4	STR	6'-5"	17
H4	4	#4	STR	2'-11"	8
H5	28	#4	1	3'-3"	61
H6	4	#4	STR	13'-6"	36
N1	4	#6	2	11'-1"	67
N2	2	#6	2	10'-9"	32
N3	6	#5	2	9'-6"	59
N4	6	#5	2	8'-3"	52
N5	6	#4	2	6'-11"	28
N6	6	#4	2	5'-7"	22
S1	6	#6	STR	6'-0"	54
T1	6	#5	STR	14'-3"	89
V1	4	#4	STR	9'-2"	24
V2	2	#4	STR	8'-9"	12
V3	6	#4	STR	7'-5"	30
V4	6	#4	STR	6'-2"	25
V5	6	#4	STR	4'-10"	19
V6	6	#4	STR	3'-7"	14
Z1	6	#5	3	6'-6"	41
Z2	6	#5	3	5'-9"	36
Z3	6	#4	3	4'-11"	20
Z4	6	#4	3	4'-1"	16
Z5	6	#4	3	3'-4"	13

REINFORCING STEEL
FOR 2 WINGS 900 LBS.

CLASS A CONCRETE
2 WINGS 13.1 C.Y.
1 HEADWALL 0.6 C.Y.
1 END CURTAIN WALL 0.7 C.Y.
TOTAL 14.4 C.Y.

NOTES

G1 BARS IN HEADWALL ARE INCLUDED WITH THE BARREL REINFORCING STEEL.

A 3 FOOT STRIP OF FILTER FABRIC SHALL BE ATTACHED TO THE FILL FACE OF THE WING COVERING THE ENTIRE LENGTH OF THE EXPANSION JOINT.

PROJECT NO. R-5739
NORTHAMPTON COUNTY
STATION: 451+96.00 -L-

SHEET 8 OF 9

NORTH CAROLINA PROFESSIONAL SEAL 20125 ENGINEER MARSHALL W. GALLOWAY, JR.
Signature: Marshall W. Galloway, Jr.
5FBCC2F3A4DC413...
7/23/2025

DOCUMENT NOT CONSIDERED FINAL UNLESS ALL SIGNATURES COMPLETED

TGS ENGINEERS
706 HILLSBOROUGH STREET
SUITE 200
RALEIGH, NC 27603
PH (919) 773-8887
CORP. LICENSE NO.: C-0275

STATE OF NORTH CAROLINA
DEPARTMENT OF TRANSPORTATION
RALEIGH

STANDARD WINGS FOR CONCRETE BOX CULVERT

H = 9'-0" SLOPE = 2:1
LEFT EXTENSION

REVISIONS						SHEET NO.
NO.	BY:	DATE:	NO.	BY:	DATE:	C4-8
1			3			TOTAL SHEETS
2			4			9

ASSEMBLED BY :	STM	DATE :	07/22
CHECKED BY :	MGC	DATE :	08/22
DRAWN BY : CCJ	10/99	REV. 6/19	MAA/THC
CHECKED BY : RWW	03/00		

11/28/2023
X:\NCDOT\R-5739\Structures\Str.#4 (451 + 96.00 -L-)\Final Plans\DGNs\R-5739_SMU_CU_STR 4_8.dgn
User:ZSmith

STD. NO. CW9009 STR #4