| PROJECT REFERENCE NO. | SHEET NO. |
|---|---|
| U-6187 | Sig. 2.1 |

## 18 CHANNEL CONFLICT MONITOR PROGRAMMING DETAIL

(remove jumpers and set switches as shown)

REMOVE DIODE JUMPERS 1-5, 1-6, 1-9, 1-11, 2-5, 2-6, 2-9, 2-11, 3-7, 3-8, 3-10, 3-12, 4-7, 4-8, 4-10, 4-12, 5-9, 5-11, 6-9, 6-11, 7-10, 7-12, 8-10, 8-12, 9-11, and 10-12.

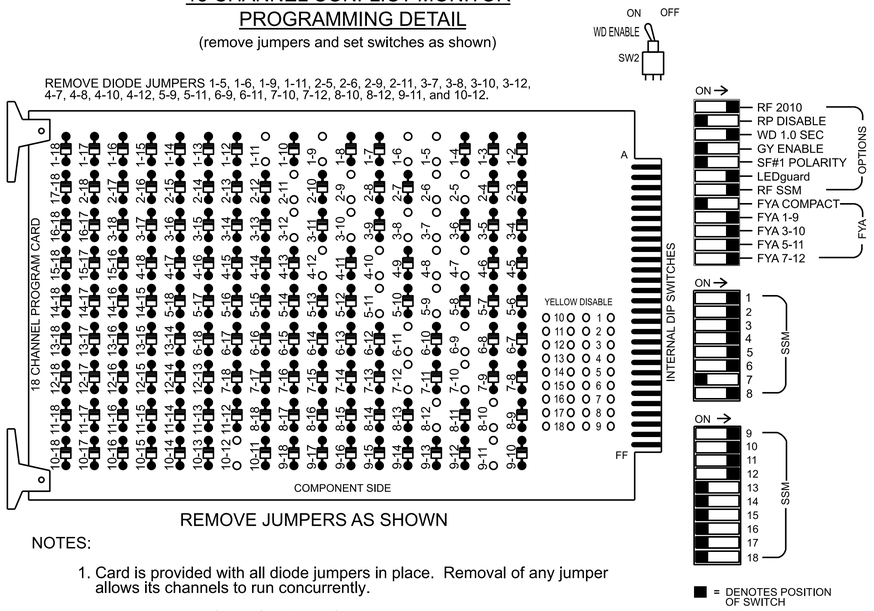


REMOVE JUMPERS AS SHOWN

NOTES:

1. Card is provided with all diode jumpers in place. Removal of any jumper allows its channels to run concurrently.
2. Ensure jumpers SEL2-SEL5 and SEL9 are present on the monitor board.
3. Ensure that the Red Enable is active at all times during normal operation.
4. Connect serial cable from conflict monitor to comm. port 1 of 2070 controller. Ensure conflict monitor communicates with 2070.

## NOTES

1. To prevent "flash-conflict" problems, insert red flash program blocks for all unused vehicle load switches in the output file. The installer shall verify that signal heads flash in accordance with the signal plan.
2. Program phases 4 and 8 for Dual Entry.
3. Program controller to start up in phase 2 Green No Walk and 6 Green No Walk.
4. If this signal will be managed by an ATMS software, enable controller and detector logging for all detectors used at this location.

## EQUIPMENT INFORMATION

Controller.....2070LX
Cabinet.....332 w/ Aux
Software.....Q-Free MAXTIME
Cabinet Mount.....Base
Output File Positions.....18 With Aux. Output File
Load Switches Used.....S1, S2, S4, S5, S7, S8, S10, S11, AUX S1, AUX S2, AUX S4, AUX S5
Phases Used.....1, 2, 3, 4, 5, 6, 7, 8
Overlap "1".....*
Overlap "2".....*
Overlap "3".....*
Overlap "4".....*

*See overlap programming detail on sheet 2

## SIGNAL HEAD HOOK-UP CHART

| LOAD SWITCH NO. | S1 | | S2 | S3 | S4 | | S5 | S6 | S7 | | S8 | S9 | S10 | S11 | S12 | AUX S1 | AUX S2 | AUX S3 | AUX S4 | AUX S5 | AUX S6 |
|---|---|---|---|---|---|---|---|---|---|---|---|---|---|---|---|---|---|---|---|---|---|
| CMU CHANNEL NO. | 1 | | 2 | 13 | 3 | | 4 | 14 | 5 | | 6 | 15 | 7 | 8 | 16 | 9 | 10 | 17 | 11 | 12 | 18 |
| PHASE | 1 | | 2 | 2 PED | 3 | | 4 | 4 PED | 5 | | 6 | 6 PED | 7 | 8 | 8 PED | OL1 | OL2 | SPARE | OL3 | OL4 | SPARE |
| SIGNAL HEAD NO. | 11★ | 82 | 21,22 | NU | 31★ | 22 | 41,42 | NU | 51★ | 42 | 61,62 | NU | 71★ | 81,82 | NU | 11★ | 31★ | NU | 51★ | 71★ | NU |
| RED | * | | 128 | | * | | 101 | | * | | 134 | | | 107 | | | | | | | |
| YELLOW | | | 129 | | | | 102 | | | | 135 | | * | 108 | | | | | | | |
| GREEN | | | 130 | | | | 103 | | | | 136 | | | 109 | | | | | | | |
| RED ARROW | | | | | | | | | | | | | | | | A121 | A124 | | A114 | A101 | |
| YELLOW ARROW | | 126 | | | | 117 | | | | 132 | | | | | | A122 | A125 | | A115 | A102 | |
| FLASHING YELLOW ARROW | | | | | | | | | | | | | | | | A123 | A126 | | A116 | A103 | |
| GREEN ARROW | 127 | 127 | | | 118 | 118 | | | 133 | 133 | | | 124 | | | | | | | | |

NU = Not Used

* Denotes install load resistor. See load resistor installation detail this sheet.

★ See pictorial of head wiring in detail this sheet.

## FYA SIGNAL WIRING DETAIL

*(wire signal heads as shown)*

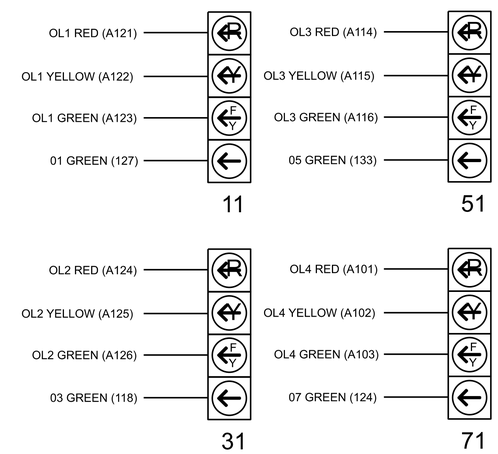


## INPUT FILE POSITION LAYOUT

(front view)

| | | 1 | 2 | 3 | 4 | 5 | 6 | 7 | 8 | 9 | 10 | 11 | 12 | 13 | 14 |
|---|---|---|---|---|---|---|---|---|---|---|---|---|---|---|---|
| FILE "I" | U | Ø 1 1A | Ø 1 1B | Ø 2 2A | SLOT EMPTY | Ø 3 3A | Ø 4 4A | SLOT EMPTY | SLOT EMPTY | SLOT EMPTY | SLOT EMPTY | SLOT EMPTY | SLOT EMPTY | SLOT EMPTY | FS DC ISOLATOR |
| | L | NOT USED | NOT USED | NOT USED | | NOT USED | NOT USED | | | | | | | | ST DC ISOLATOR |
| FILE "J" | U | Ø 5 5A | Ø 5 5B | Ø 6 6A | SLOT EMPTY | Ø 7 7A | Ø 8 8A | SLOT EMPTY | SLOT EMPTY | SLOT EMPTY | SLOT EMPTY | SLOT EMPTY | SLOT EMPTY | SLOT EMPTY | SLOT EMPTY |
| | L | NOT USED | NOT USED | NOT USED | | NOT USED | NOT USED | | | | | | | | |

EX.: 1A, 2A, ETC. = LOOP NO.'S

FS = FLASH SENSE
ST = STOP TIME

## INPUT FILE CONNECTION & PROGRAMMING CHART

| LOOP NO. | LOOP TERMINAL | INPUT FILE POS. | PIN NO. | INPUT POINT | DETECTOR NO. | CALL PHASE | DELAY TIME | EXTEND TIME | EXTEND | ADDED INITIAL | CALL | DELAY DURING GREEN |
|---|---|---|---|---|---|---|---|---|---|---|---|---|
| 1A | TB2-1,2 | I1U | 56 | 18 | 1 ★ | 1 | 15 | | X | | X | |
| | | | | - | 29 ★ | 6 | 3 | | X | | X | X |
| 1B | TB2-5,6 | I2U | 39 | 1 | 2 | 1 | 15 | | X | | X | |
| 2A | TB2-9,10 | I3U | 63 | 29 | 4 | 2 | | | X | X | X | |
| 3A | TB4-5,6 | I5U | 58 | 20 | 7 ★ | 3 | 15 | | X | | X | |
| | | | | - | 30 ★ | 8 | 3 | | X | | X | |
| 4A | TB4-9,10 | I6U | 41 | 3 | 8 | 4 | | | X | | X | |
| 5A | TB3-1,2 | J1U | 55 | 17 | 15 ★ | 5 | 15 | | X | | X | |
| | | | | - | 31 ★ | 2 | 3 | | X | | X | X |
| 5B | TB3-5,6 | J2U | 40 | 2 | 16 | 5 | 15 | | X | | X | |
| 6A | TB3-9,10 | J3U | 64 | 30 | 18 ★ | 6 | | | X | X | X | |
| 7A | TB5-5,6 | J5U | 57 | 19 | 21 ★ | 7 | 15 | | X | | X | |
| | | | | - | 32 | 4 | 3 | | X | | X | |
| 8A | TB5-9,10 | J6U | 42 | 4 | 22 | 8 | | | X | | X | |

★ For the detectors to work as shown on the signal design plan, see the Vehicle Detector Setup Programming Detail for Alternate Phasing on sheet 2.

INPUT FILE POSITION LEGEND: J2L
FILE J
SLOT 2
LOWER

## LOAD RESISTOR INSTALLATION DETAIL

*(install resistors as shown)*

| ACCEPTABLE VALUES | |
|---|---|
| Value (ohms) | Wattage |
| 1.5K - 1.9K | 25W (min) |
| 2.0K - 3.0K | 10W (min) |

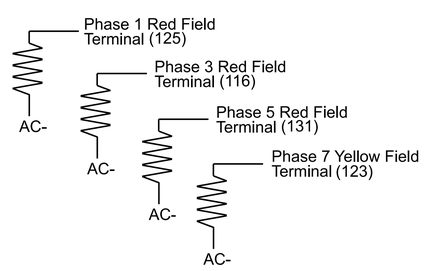


THIS ELECTRICAL DETAIL IS FOR
THE SIGNAL DESIGN: 09-0367
DESIGNED: July 2025
SEALED: 7/10/2025
REVISED: N/A


VHB Engineering NC, P.C. (C-3705)
940 Main Campus Drive, Suite 500
Raleigh, NC 27606
919.829.0328


Electrical Detail-Sheet 1 of 3

DOCUMENT NOT CONSIDERED FINAL UNLESS ALL SIGNATURES COMPLETED

ELECTRICAL AND PROGRAMMING DETAILS FOR:

750 N.Greenfield Pkwy,Garner,NC 27529

US 158
at
SR 1630 (Baltimore Rd.)

Division 9 | Davie County | Bermuda Run

| | | | |
|---|---|---|---|
| PLAN DATE: | July 2025 | REVIEWED BY: | L. Gottlieb |
| PREPARED BY: | J. Ma | REVIEWED BY: | M. L. Stygles |

| REVISIONS | INIT. | DATE |
|---|---|---|
| | | |

SEAL
NORTH CAROLINA PROFESSIONAL SEAL 033108 ENGINEER JIANXIN MA

DocuSigned by: Jianxin Ma 7/10/2025
SIGNATURE | DATE

SIG. INVENTORY NO. 09-0367