Docusign Envelope ID: 84EDD841-85BB-4DE3-81A8-8FEB0E4BAA76

PROJECT REFERENCE NO.	SHEET NO.
U-6187	2C-8

STATE OF NORTH CAROLINA DEPT. OF TRANSPORTATION DIVISION OF HIGHWAYS RALEIGH, N.C.

ENGLISH DETAIL DRAWING FOR
TRAFFIC BEARING GRATED INLET
FOR PIPES UP TO 54"

SHEET 1 OF 2
840D35

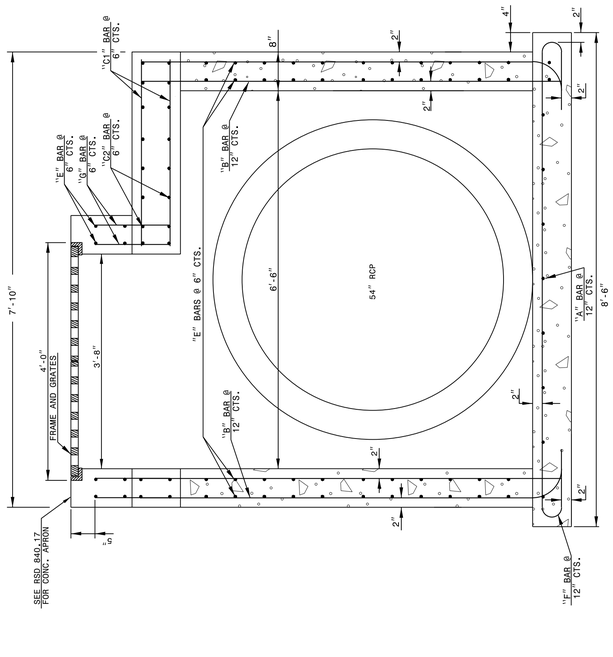

SECTION X-X

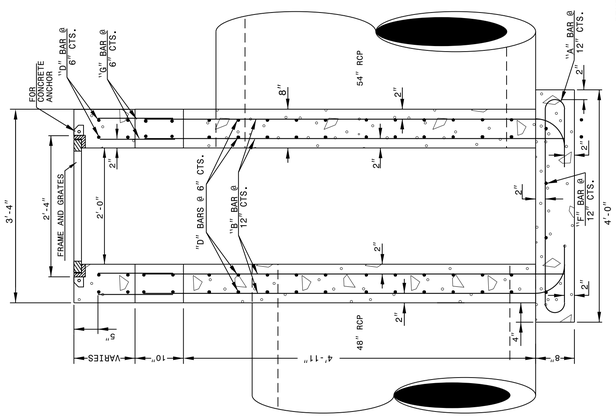

SECTION Y-Y

GENERAL NOTES:
-BUILD WITH CLASS 'AA' CONCRETE
-CHAMFER ALL EXPOSED CONCRETE CORNERS 3".
-USE FORMS TO CONSTRUCT THE BOTTOM SLAB.
-IF PIPES ARE SET IN THE BASE, FOLLOW CONSTRUCTION PROCEDURES SHOWN BY STD. DWG. 840.00.
-PRECAST UNITS CONCRETE MAY BE USED IN LIEU CAST IN PLACE CONCRETE.
-REFERENCE STD. DWG. 840.25 FOR FRAME ANCHORAGE.
-PROVIDE DOWEL NUTS OVER 3.45" DEEP WITH STEPS AS DIRECTED BY STD. DWG. 840.66.
-FRAME AND GRATES ARE SEPARATE CONTRACT ITEM.

NOTES:
-HORIZONTAL (UP TO 10' MAX. IN BOTH DIRECTIONS) AND VERTICAL (UP TO 20' MAX.) DIMENSIONS MAY BE ADJUSTED AS THE FIELD CONDITIONS AND/OR ALTERNATE DESIGNS DICTATE.
-ALL ADJUSTMENTS ARE TO BE MADE AS DIRECTED BY THE ENGINEER.

STATE OF NORTH CAROLINA DEPT. OF TRANSPORTATION DIVISION OF HIGHWAYS RALEIGH, N.C.

ENGLISH DETAIL DRAWING FOR
TRAFFIC BEARING GRATED INLET
FOR PIPES UP TO 54"

SHEET 2 OF 2
840D35

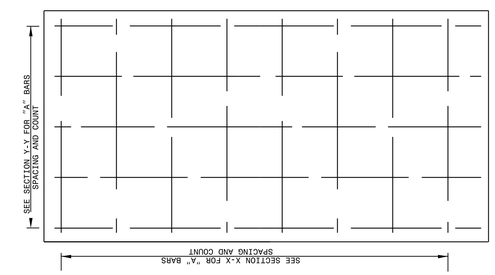

PLAN OF BASE

BILL OF MATERIALS

BAR	SIZE	LENGTH	QUANTITY	WEIGHT
A	#5	5'-0"	42	47
B	#5	7'-6"	104	780
C1	#5	3'-4"	9	32
C2	#5	3'-0"	6	19
D	#5	7'-6"	48	376
E	#5	3'-0"	48	151
F	#5	10'-0"	4	42
G	#5	1'-8"	104	181
REINF. STEEL (TOTAL WEIGHT LBS.)				1628
CONCRETE TOTAL (CU.YDS.) CLASS "AA"				5.1
NO DEDUCTIONS HAVE BEEN MADE TO ACCOMMODATE PIPES				

FOR EVERY 1 FOOT OF RISER USE 0.41 CU.YDS CONCRETE AND 390 LBS STEEL.

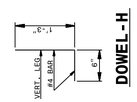

DOWEL-H

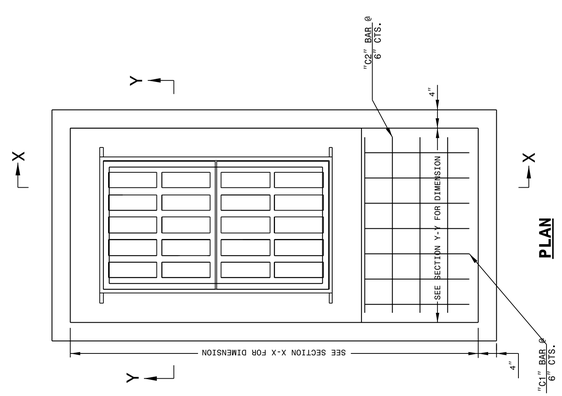

PLAN

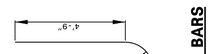

CORNER BARS

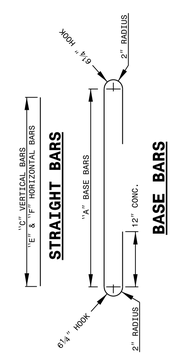

STRAIGHT BARS

BASE BARS

DOCUMENT NOT CONSIDERED FINAL UNLESS ALL SIGNATURES COMPLETED

CONTRACT STANDARDS AND DEVELOPMENT UNIT
Office 919-707-6950 FAX 919-250-4119

SEE PLATE FOR TITLE

ORIGINAL BY: K. KEMPF DATE: 03-03-2015
MODIFIED BY: DATE:
CHECKED BY: DATE:
FILE SPEC.: jhowerton/840d35 TBDI Up to 54in.dgn

STATE OF NORTH CAROLINA DEPT. OF TRANSPORTATION DIVISION OF HIGHWAYS RALEIGH, N.C.

ENGLISH DETAIL DRAWING FOR
TRAFFIC BEARING GRATED INLET
FOR PIPES UP TO 54"

SHEET 1 OF 2
840D35

STATE OF NORTH CAROLINA DEPT. OF TRANSPORTATION DIVISION OF HIGHWAYS RALEIGH, N.C.

ENGLISH DETAIL DRAWING FOR
TRAFFIC BEARING GRATED INLET
FOR PIPES UP TO 54"

SHEET 2 OF 2
840D35

13-AUG-2018 09:00
S:\Contracts\Contracts\Special Details\jhowerton\840d35 TBDI Up to 54in.dgn
jhowerton AT CSD-292595